UNIVERSAL
LIBRARY
OU_172664
UNIVERSAL
LIBRARY

PRACTICAL CHEMISTRY

MACMILLAN AND CO., LIMITED
LONDON · BOMBAY · CALCUTTA · MADRAS
MELBOURNE

THE MACMILLAN COMPANY
NEW YORK · BOSTON · CHICAGO
DALLAS · SAN FRANCISCO

THE MACMILLAN CO. OF CANADA, LTD
TORONTO

PRACTICAL CHEMISTRY

BY

JAMES BRUCE

PH.D. (MUNICH), B.SC. (LOND.), F.I.C.

ASSOCIATE OF THE ROYAL COLLEGE OF SCIENCE, LONDON
FELLOW OF THE CHEMICAL SOCIETIES OF LONDON AND BERLIN
HEAD OF THE CHEMISTRY DEPARTMENT OF THE TECHNICAL COLLEGE
HUDDERSFIELD

AND

HARRY HARPER

B.SC. (LOND.), A.R.C.S. (LOND.), A.I.C.,

FELLOW OF THE CHEMICAL SOCIETY OF LONDON,
HEAD OF THE CHEMISTRY DEPARTMENT OF THE TRADE AND GRAMMAR
SCHOOL, KEIGHLEY

MACMILLAN AND CO., LIMITED
ST. MARTIN'S STREET, LONDON
1925

COPYRIGHT

First Edition 1910.
Reprinted 1911, 1913.
Second Edition, 1915.
Reprinted 1916, 1918, 1919 (twice), 1920, 1923.
Third Edition 1925.

PRINTED IN GREAT BRITAIN

PREFACE.

DURING many years' experience in teaching practical chemistry to students who have completed a course of elementary work, the authors have felt the need of a laboratory manual more general in character than those commonly used. The preparation of inorganic compounds is a very important branch of experimental work which is too often neglected, but which forms a most valuable preliminary to the study of the analytical methods adopted for the detection and separation of the elements

In this volume a selection has been made of typical preparations which can easily be carried out by a careful student. The methods described have all been repeatedly practised in the authors' laboratories, and found to yield satisfactory results. A number of simple organic preparations has also been added. While full instructions are given, so as to render it possible for a student of little experience to work by himself, it has been assumed that the work will be supervised by a teacher.

The arrangement of the inorganic preparations is not necessarily that in which they should be taken ; this must be left to the discretion of the teacher. But it would be well for a student beginning the study of organic chemistry to work through the organic part in the order given.

Some knowledge of elementary chemistry is expected to be possessed by students using this book. In order, however, to facilitate the work of those who have not much laboratory experience, an introductory section has been included, containing a short account of the apparatus and appliances required for the work which follows, and commonly found in laboratories.

The section on Qualitative Analysis has been made sufficiently complete for most practical purposes, and should be undertaken after the preparation of inorganic compounds. Some knowledge of organic chemistry, however, will be required for a proper understanding of the reactions and detection of the organic acids.

Quantitative work is dealt with in a simple manner in Part II. of the book, and here also a short account of the principles underlying quantitative analysis, and of the apparatus employed in carrying out the work, has been included in the introduction. The sections on Volumetric and Gravimetric Analysis are intended to serve only as a short introduction to these branches of Quantitative work.

It is hoped that the book will be found useful by teachers, and by students preparing for the various University examinations in Practical Chemistry, the examinations of the Board of Education, the Pharmaceutical Society, and other bodies.

J. B.
H. H.

PREFACE TO THE SECOND EDITION

THE favourable reception which has been accorded to the book has warranted the issue of an enlarged edition. In this the opportunity has been taken to introduce sections dealing with electro-chemical analysis, the use of the nitrometer and gas volumeter, and the methods of gas analysis. The sections on the examination of alloys and on mineral analysis have also been extended, and some additional preparations, both organic and inorganic, have been placed in the appendix. The usefulness of the book has thus been increased.

The authors wish to express their thanks to many friends, teachers and others, who have helped them with advice and criticism.

J. B.
H. H.

PREFACE TO THIRD EDITION.

THE preparation of a third edition has given an opportunity for considerable extension in some sections. The organic portion has been largely increased, and a short system of analysis included, in order to meet more fully the requirements of medical and pharmaceutical students. The articles on ionisation and other topics should help to a better understanding of many of the reactions and operations in common use.

The authors wish to renew their thanks for much helpful criticism, and for many valuable suggestions for the improvement of the book.

J. B.
H. H.

CONTENTS

PART I.

INTRODUCTION

THE USE OF SOME COMMON LABORATORY APPARATUS AND METHODS - - - - - - - - 1

SECTION I. PREPARATIONS

INSTRUCTIONS TO STUDENTS - - - - - - 23

A. INORGANIC COMPOUNDS - - - - - - 24

B. CARBON COMPOUNDS - - - - - - 72

C. PHYSICAL MEASUREMENTS - - - - - 134

SECTION II. QUALITATIVE ANALYSIS

INSTRUCTIONS TO STUDENTS - - - - - - 143

REACTIONS OF THE METALS

THE SILVER GROUP: SILVER, LEAD, MERCURY - 144

THE COPPER GROUP: MERCURY, LEAD, BISMUTH, COPPER, CADMIUM, ARSENIC, ANTIMONY, TIN 146

THE IRON GROUP: IRON, CHROMIUM, ALUMINIUM 154

THE ZINC GROUP: ZINC, MANGANESE, NICKEL, COBALT - - - - - - - - 159

THE BARIUM GROUP: BARIUM, STRONTIUM, CALCIUM - - - - - - - - - 164

THE SODIUM GROUP: POTASSIUM, SODIUM, LITHIUM, AMMONIUM, MAGNESIUM - - - - - 166

Reactions of the Acids - - - - - - 169
Ionisation - - - - - - - - - 182
Systematic Detection of the Ions - - - 193
The Colloidal State - - - - - - 197
A Method of Analysis - - - - - 202
Treatment of Insolubles - - - - - 217
Qualitative Analysis of Organic Substances - 218
Detection of Organic Acids - - - - 223

PART II.

Introduction
The Balance - - - - - - 230
Volumetric Apparatus - - - - - 239

Section I. Volumetric Analysis
Equivalents - - - - - - - 242
Acidimetry and Alkalimetry - - - - 246
Indicators - - - - - - - 251
Potassium Permanganate - - - - - 261
Potassium Dichromate - - - - - - 267
Silver Nitrate - - - - - - - 270
Potassium Cyanide - - - - - - 271
Potassium Thiocyanate - - - - - 272
Iodine and Thiosulphate - - - - - 274
Standard Soap Solution - - - - - 281
Estimation of Sugars - - - - - - 283

SECTION II. GRAVIMETRIC ANALYSIS

ESTIMATION OF SOME COMMON METALLIC AND ACIDIC RADICALS - - - - - - - 292

SEPARATIONS - - - - - - - - 314

ELECTROCHEMICAL ANALYSIS - - - - - 329

THE NITROMETER AND GAS-VOLUMETER - - 335

GAS ANALYSIS - - - - - - - 338

APPENDIX - - - - - - - - - 344

INDEX - - - - - - - - - - 354

PART I.

INTRODUCTION.

1. Glass tube. It is necessary frequently to cut and bend glass tube in the fitting up of apparatus. For connections, soft glass, that is, readily fusible glass, of small diameter, is generally employed. To break this, make a cut with a sharp file at the required position; hold the tube firmly in both hands, pressing the thumbs together on the glass opposite to the cut, and pull the hands apart. The tube will break evenly at the cut. For wider tube this will be found difficult; it is better to make a deep cut on one side of the tube, and apply to it a red-hot point of glass. The tube will crack all round, or partly so. In the latter case, apply the hot point to the end of the crack and so lead it all round the tube. The glass-cutter (Fig. 1) is very effective for glass tube of all kinds. By rotating the tube in the cutter, the edge of the steel wheel makes a circular cut, and with this even hard combustion tube can easily be broken.

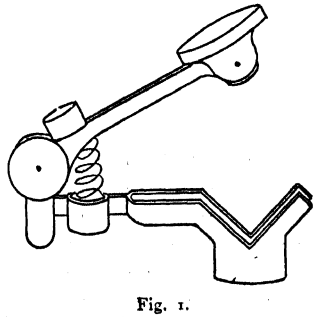

Fig. 1.

2. To bend glass tube. Hold the tube in the upper part of the flame of a fish-tail burner, and in the same plane with it, and rotate the tube slowly and continuously on its axis, so that it is uniformly heated (Fig. 2, *a*). When it becomes soft, remove it from the flame and bend it to the required angle.

The bend should then appear as Fig. 2, *b*. If the tube is heated in a Bunsen burner, only a short length becomes softened, and it then bends like Fig. 2, *c*. This is much weaker than the proper bend, and is liable to break under a slight stress.

To draw out glass tube to a capillary, the tube is first softened in the Bunsen burner, with continued rotation, then removed from the flame and the two portions drawn apart until the capillary is of the required diameter. If the capillary is to have a thick wall, the tube must be kept soft in the flame, before drawing, until the wall has thickened sufficiently.

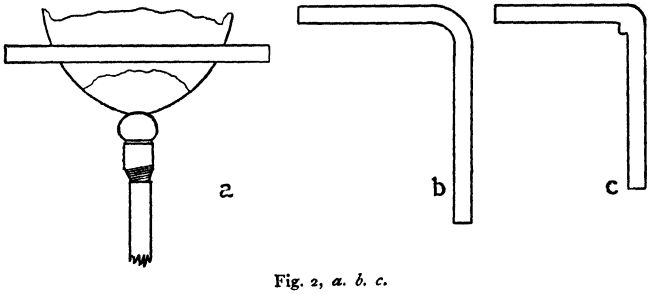

Fig. 2, *a. b. c.*

To seal the end of a tube, it is best to draw off a portion as just described, and then, in a small flame, draw off the narrow portion where the narrowing just begins. In this way the inside of the tube is kept free from moisture.

For hard Jena glass or combustion tube, the blow-pipe flame will be required, and for the hardest combustion tube, the oxy-coal gas flame. The blow-pipe flame may be made much more effective by allowing it to impinge on a vertical firebrick slab, placed just behind the article to be heated. The heat is thus to some extent conserved.

3. Corks and cork-borers. Corks should be made of sound bark only. Before use they should be well softened in the cork-press, or by rolling under a flat weight. To bore the cork, a borer should be selected slightly less in diameter than the tube to be inserted. Begin at each end of the cork and bore half-way through, rotating the borer on its axis and

applying only a slight pressure. With a little care the holes will meet midway. Subsequent filing of the hole is not to be recommended, as this seldom gives a gas-tight joint.

Rubber stoppers may be bored similarly, but the hole should be made from one end only. The borer should be a little larger than the hole required, and should be lubricated with caustic soda solution or glycerine. The borer must also be sharp. It may be sharpened by rubbing the outside of the edge with a file, but better results are obtained by using the special sharpener.

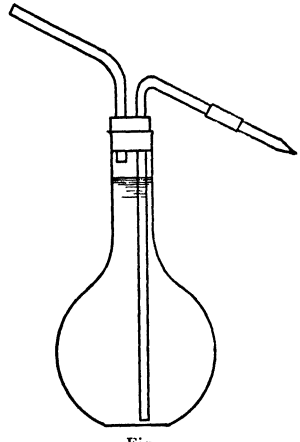

Fig. 3.

4. To fit a wash-bottle. The construction is shown in the diagram (Fig. 3). Rubber stoppers give a more gas-tight apparatus, but should not be used with organic liquids, as alcohol, ether, etc. When using unpleasant-smelling liquids like sulphuretted hydrogen water, a rubber tube may be placed on the end of the glass tube, air blown in and the rubber then closed by the finger and thumb. The stream of water will continue for a short time. The pressure on the tube should be released before again applying the mouth.

SOLUTIONS.

5. Preparing a substance for solution. Materials that occur in large crystals should be ground to a more or less fine state of division in a Wedgwood or porcelain mortar (Fig. 4). The process of solution will then be much more rapid, whatever the solvent may be. For hard materials an iron mortar may be used, but there is some risk of contamination

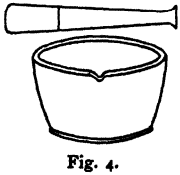

Fig. 4.

with iron, and in quantitative analysis this is to be avoided. Minerals, which must be reduced to an impalpable powder before the treatment with the acid to obtain a solution for analysis, may be crushed to small pieces in the steel crusher (Fig. 5). This consists of three parts. The hollow cylinder fits into the cavity in the base, and the ram fits into the cylinder. The mineral is placed in the latter, and the ram hammered in. The coarse powder so obtained is then very finely ground in the agate mortar (Fig. 6). To obtain the finest powder, a very small quantity is ground at one time, until the gritty sensation can no longer be detected.

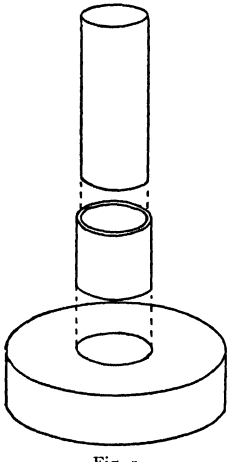

Fig. 5.

6. **Making a solution.** In general it is sufficient to bring the substance, in a sufficiently fine state of division, and the solvent together in a beaker or flask, stirring or shaking frequently, and heating if necessary on the water-bath. The stirring, if it has to be long-continued, may be effected by means of a water-turbine (Fig. 11).

When a volatile solvent like alcohol or chloroform is being used, the solution should be made in a flask fitted with a reflux condenser, and heated on the water-bath (Fig. 18).

To ensure that a solution is saturated, there must be some of the substance (the solute) remaining undissolved when the operation is over.

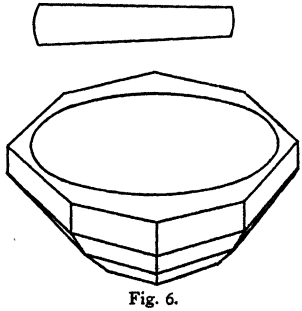

Fig. 6.

SOLUBILITY.

7. The solubility of a substance varies with the temperature, increasing in the majority of cases with increase of temperature. All

determinations must, therefore, be made at a definite temperature, which must be kept constant while the solution is being prepared.

The **thermostat** is an apparatus for this purpose. It consists of a water-bath of sufficient magnitude, the water being kept gently moving by means of a current of air from a tube let down to the bottom, or by some form of mechanical stirrer. The temperature is kept constant by interposing a **gas-regulator** between the gas-tap and the burner. There are many forms of regulator. A simple one, Reichardt's, is shown in Fig. 7. The bulb of mercury is clamped in the bath. The gas passes in at *a*, enters the opening at the bottom of the hollow ground-in stopper, and passes from the latter at *b* to the burner under the bath. Should the temperature rise, the mercury expands and partially closes the sloping opening at the bottom of the stopper, thereby diminishing the gas-supply and lowering the flame. A fall of temperature results, with opposite effects. In this way the temperature of the thermostat can be kept within very narrow limits, say half a degree, this depending on the construction and sensitiveness of the regulator, size of bath, etc. For different temperatures the amount of mercury is varied by means of the brass screw at *c*. A small by-pass prevents extinction of the flame.

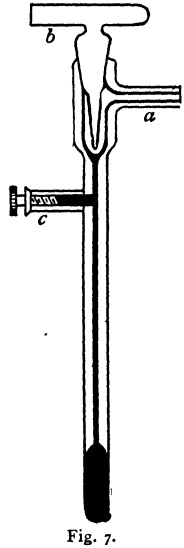

Fig. 7.

8. **To determine solubility.** The material to be examined is placed, together with the solvent, in a flask or bottle, which is then closed, immersed in the thermostat, and frequently shaken or kept in motion mechanically. After an hour or more a portion of the clear liquid is poured into a weighed, stoppered bottle, allowed to cool and weighed. The amount of dissolved substance is then determined by a chemical analysis, or by evaporating and weighing the dry residue.

The relation of solubility to temperature may be shown

graphically by means of curves like those in the diagram[1] (Fig. 8). Nearly all exhibit a regular increase, the curves for sodium chloride and potassium iodide being almost straight lines. In the case of anhydrous sodium sulphate the solubility attains a maximum at 33°, and then diminishes.

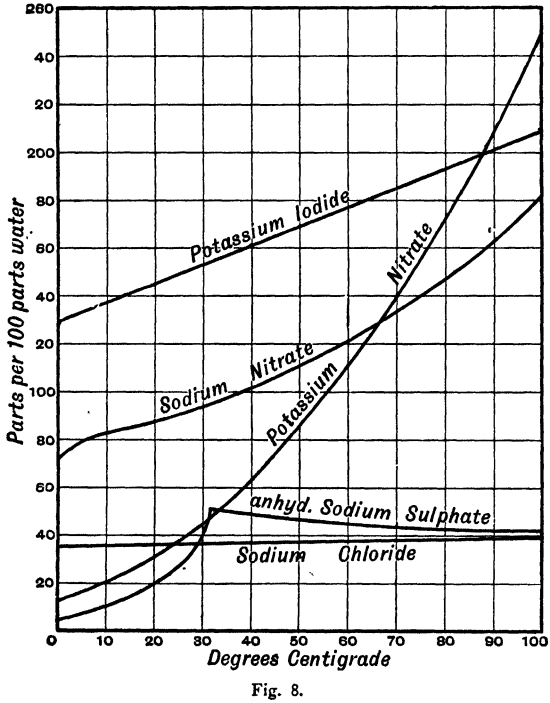

Fig. 8.

As an example, determine the solubility of potassium dichromate at various temperatures, and draw the solubility curve. Begin with a solution saturated at 80°—90°, by immersing in a large beaker of water. The gas-regulator may be dispensed

[1] The data for these curves are taken from Comey's *Dictionary of Chemical Solubilities.*

with. Decant a portion into the weighing-bottle, allow to cool, weigh, then wash out into a weighed porcelain dish, evaporate to dryness on the water-bath, and heat gently with the naked flame until the weight is constant. Allow the remainder of the liquid to cool, take off portions at 60°, 40°, etc., and proceed as before. From these weights the solubility may be calculated at once, in grams of dry solid per hundred grams of water.

CRYSTALLISATION.

9. From the above solubility curves it is obvious that if a solution, say of potassium nitrate, saturated at 80°, and containing therefore 172 grams of solid per 100 grams of water, be cooled to 20°, the liquid then retains only 31.2 grams per 100 grams of water. A quantity of nitrate therefore, 140.8 grams, must separate from the liquid. This separation of a dissolved substance on cooling a solution saturated at a higher temperature generally takes place in forms of definite shape, called crystals, and the process is called crystallisation.

10. Purification by crystallisation. If the original substance contains a soluble impurity, this may be wholly or partly removed by crystallisation. If the impurity does not saturate the liquid at the lower temperature, it will all remain in the mother liquor, and the crystallised substance will therefore be free from it. The degree of purification thus depends on the amount and solubility of the impurities, and repeated recrystallisation is sometimes necessary to obtain a pure product.

In cases where a substance is much less soluble in the cold than in the hot solvent it may be obtained in the form of very small crystals ("meal") by rapidly cooling a hot saturated solution, stirring or shaking meanwhile.

11. Fractional crystallisation. In the case of two substances of different solubilities, the less soluble will crystallise first, with only a small amount of the more soluble. A solution, made from the product thus obtained, will by a second crystallisation yield a less impure substance. The product should always be tested for the more soluble substance, and if this is found, the process should be repeated.

By fractional crystallisation, substances having similar solubilities may be separated if one is present in much larger quantity than the other.

A separation may often be effected by pouring off the liquor from the first crop of crystals, before it has cooled to the temperature at which it is saturated with the second substance. The latter will then crystallise on further cooling, together with some of the first substance.

The table of solubilities given in the appendix will be found useful in the above operations.

Certain substances crystallise together in the form of double salts, *e.g.* ferrous sulphate with ammonium sulphate to form ferrous ammonium sulphate, $FeSO_4.(NH_4)_2SO_4.6H_2O$. Such compounds cannot be separated by this method.

12. Isomorphism. Substances of similar chemical constitution, having an equal number of atoms in their molecules, and crystallising in the same form, are termed **isomorphous.** They often have certain elements in common, and show analogous properties. Such substances have also the property of mixed crystallisation, that is, the crystals separated from a solution of two such bodies contain a mixture of the isomorphous compounds, even when the concentrations of the two bodies in the solution differ considerably. Such compounds, therefore, cannot be separated by crystallisation.

The law of isomorphism was discovered by Mitscherlich in 1820, by an examination of the corresponding salts of phosphoric acid, H_3PO_4, and arsenic acid, H_3AsO_4. Examples will be given later, in the alums, etc.

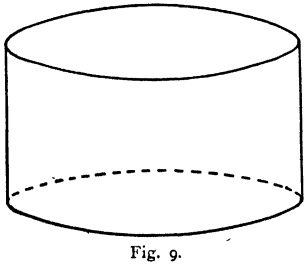

Fig. 9.

13. Growth of crystals. By slow evaporation of the solvent larger and purer crystals are obtained. This may be effected in a shallow flat-bottomed crystallising dish (Fig. 9). The small crystals which separate first from a solution are usually perfect. If such crystals are suspended in the saturated solution by a hair or silk fibre, or if they are turned every day

on different faces, so that all are equally exposed to the action of the solution, large and perfect crystals can readily be obtained. In a crystalline mass, however, the individual crystals are usually incomplete or distorted.

PRECIPITATION.

14. When solutions are mixed containing two bodies which can, by interaction, produce another substance insoluble or sparingly soluble in the solvent, then, in general, this other substance is produced, and separates from the liquid in the form of a **precipitate**. Thus when barium chloride and sodium sulphate are dissolved separately in water, and the solutions mixed, barium sulphate is at once separated as a white precipitate, this being practically insoluble in water.

Precipitation may take place slowly or rapidly, and is less or more complete, according as the precipitated substance is more or less soluble in the solvent. A change in the composition of the solvent often brings about precipitation or rapid crystallisation, as, for example, in the purification of common salt (par. **28**) by dissolving hydrochloric acid in its saturated aqueous solution, the addition of water to the alcohol in the preparation of iodoform (**117**, 5; **129**), or the addition of alcohol in the precipitation of lead sulphate (**303**). The rate of precipitation is often increased by vigorous stirring or shaking in a tightly stoppered precipitation jar (Fig. 10). In all cases the solution should be constantly stirred while the precipitant is added, to ensure thorough mixing. A large excess of the precipitant should be avoided, when possible, in order to facilitate the subsequent washing.

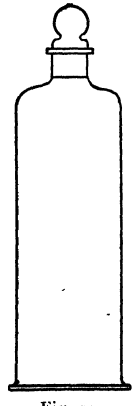

Fig. 10.

When the solubility of the precipitate is not appreciably increased by heating the liquids, it is often advisable to do this; the result is to render the precipitate more granular. Many precipitates also which are produced at first in a gelatinous form, as magnesium ammonium phosphate from strong solutions, become crystalline on standing for some hours. This is very

important with regard to the subsequent filtration, as a crystalline or granular precipitate is always more easily and rapidly filtered and washed than one of a gelatinous or coherent nature.

When a large quantity of material has to be dealt with, or when the precipitation occupies some time, the stirring or shaking may be done by means of a water-turbine (Fig. 11), electric motor or hot-air engine. The first of these is generally avail-

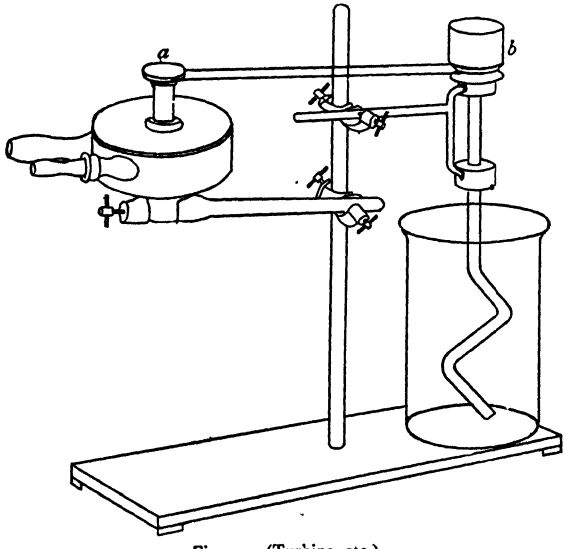

Fig. 11. (Turbine, etc.)

able. The small wheel *a* of the turbine is coupled by means of a thin cord or rubber band to the wooden pulley *b*, in which the bent glass rod stirrer is firmly fixed.

FILTRATION.

15. Before filtering off a precipitate it is in general advisable to allow it to settle, and to filter the clear liquid first. The precipitate may then be washed by **decantation**, that is by

mixing it with fresh solvent and again allowing to settle, after boiling if necessary to facilitate the removal of the impurities.

For the large quantities of liquid employed in preparations, a cloth bag filter may be used, made of stout calico and supported on a wood frame. It is also useful to employ a **fluted** filter of paper. This is made by folding the paper into 8, 16, or 32 folds according to the size of paper, instead of 4, and then arranging the folds alternately inwards and outwards. The filter is thus arranged in a series of ridges meeting at the apex. This ensures more rapid filtration.

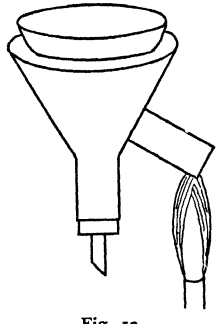

Fig. 12.

When it is desirable to filter a hot, nearly saturated solution, the filter funnel must be kept hot to avoid crystallisation of the substance. This may be done by placing the funnel in the hot water jacket (Fig. 12), passing the stem through a good cork in the bottom of the jacket.

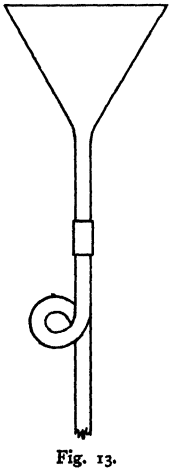

Fig. 13.

Filtration may be hastened in several ways. In analysis it often saves time to place a small fall-tube (Fig. 13) on the end of the funnel. This can easily be made by softening a glass tube in a large flame and then bending it into a complete circle. The lower straight piece should be six or seven inches long, the upper one short.

16. Filter pumps are commonly used to accelerate filtration. The upper end of the pump (Fig. 14), which may be of glass or metal, is firmly connected to the water-tap by means of strong pressure tube, secured by copper wire. The water issues through the narrow jet *a*, and at a high speed enters the slightly wider upper end of the lower tube, forcing the air down this tube in its flow. The bendings in this tube are intended to obstruct the backward passage of air. A diminished pressure is thus created

in the bulb of the pump, and in any vessel connected with it by means of the side tube. These pumps are very useful for vacuum distillation, and the pressure can readily be reduced to 10-12 mm.

The pump flask *b* shown in the diagram is of strong glass, and the Buchner funnel *c* is made of porcelain, with a flat per-

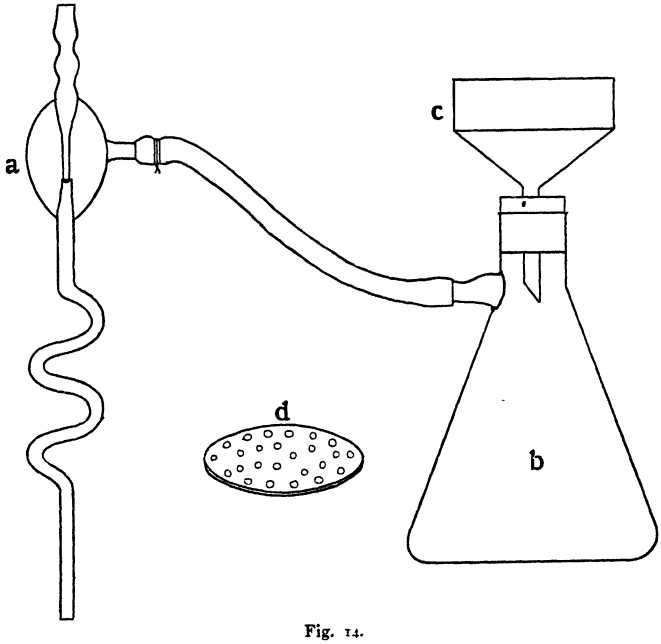

Fig. 14.

forated bottom which is either of one piece with the funnel or detachable. An ordinary glass funnel may be used, and the perforated porcelain plate *d* inserted.

The perforated bottom or plate is covered with filter paper or linen, cut to the required shape. This is then moistened with water, and pressed down so that the edge is completely closed. The pump should be working slowly while this is done. To

stop the pump when filtration is over, *first detach the tube* from the pump flask, and then turn off the water. If the water is first turned off, some may run into the pump flask on account of the low pressure therein.

17. Washing precipitates. As already explained, this may be done partially in the precipitation vessel by decantation. The liquid in each washing should be run off as completely as possible before adding the next. This applies also to the final washing on the filter. Suppose that in good and defective working respectively one-tenth and one-half of the liquid is left each time when the next washing is added. Then after three washings the concentration of the impurity is reduced in the first case to one-thousandth, in the second case to one-eighth only of its original value.

When the material to be filtered is soluble, as in the preparation of crystallised salts, the quantity of solvent used for washing must of course be as small as possible.

When the pump is being used for filtration, it must not be at work when the washing is done. Detach the tube from the pump flask, add the washing liquid to the funnel, and gently mix it with the upper portion of the substance, taking care not to disturb the filter cloth. Then allow the liquid to percolate through the mass by gravitation, and use the pump only to complete the draining. In this way the whole mass of the material is washed by the liquid. If the pump is constantly at work, the washing liquid is simply drawn through the mass by the easiest route, and the washing is consequently incomplete.

To make the draining off of the liquor as complete as possible, the substance in the funnel may be pressed down by aid of a flattened glass rod, or the top of a flat glass stopper.

ASPIRATORS.

18. These are employed for various purposes in which a slightly reduced pressure is required, as *e.g.* for drawing a current of air through an apparatus or a liquid, to assist filtration, etc. They are of various forms, some of which are shown in the diagrams. An ordinary glass bottle may be employed (Fig. 15, *a*), fitted with stopper and two tubes. Water is run

from the bottle by the longer tube, which acts as a syphon, and air is drawn in by the shorter tube. The second form, *b*, acts

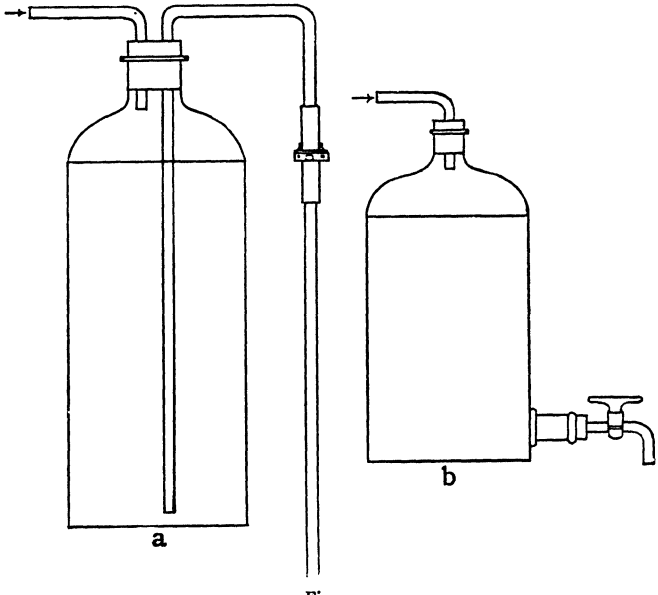

Fig. 15.

similarly, the water being drawn off by the glass tap at the bottom. A small aspirator may be made at once by simply inverting the wash-bottle (Fig. 16), and allowing the water to run off by the short tube. A screw clip on the rubber tube regulates the flow of the water.

These aspirators are, however, intermittent in action, and not of great power. The most generally useful, and at the same time the most powerful and continuous for ordinary laboratory use, is the water pump already described (Fig. 14).

By means of the water pump also, a current of air under increased pressure may be obtained. The arrangement is shown in Fig. 17. Water and air together are forced into the bottle by

the pump. The water is run off at the bottom, and the compressed air escapes by the side tube at the top of the bottle. This

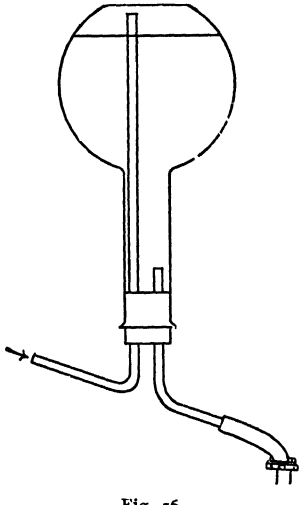

Fig. 16.

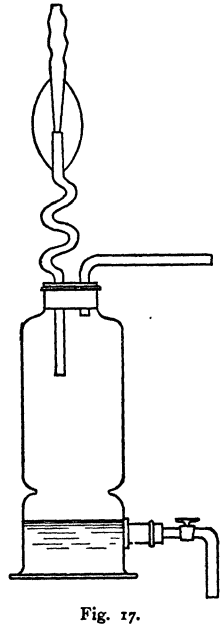

Fig. 17.

current of air can be made powerful enough to work an ordinary gas blow-pipe.

EVAPORATION.

19. In many cases a liquid may be evaporated by boiling it in an open vessel, preferably one which gives the liquid a large surface, without detriment to, or loss of, the dissolved substance. Porcelain dishes are usually employed for this purpose.

Evaporation may also be carried on more slowly, by heating on a steam-bath. A simple steam-bath may be made by boiling water in a beaker, and placing the dish containing the liquid on the mouth of the beaker.

A water-bath, strictly regarded, is one in which the vessel to be heated is immersed in the water. Such baths are often employed, as *e.g.* in determining solubilities as described earlier. But the term is also applied to all kinds of steam-baths in which the steam is generated from water in the same bath.

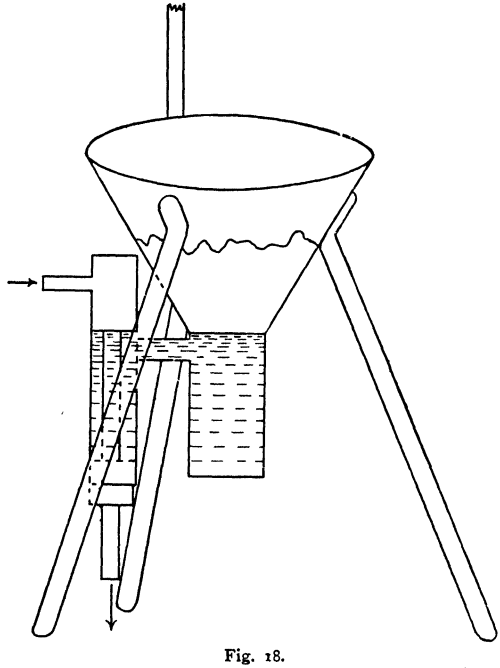

Fig. 18.

One of the most convenient forms of such water-baths for the working bench is shown in Fig. 18. As indicated in the diagram, the amount of water required is small, and this admits of rapid heating. The constant-level arrangement at the side obviates the risk of boiling to dryness. A series of concentric rings of copper or porcelain on the mouth of the bath makes possible the accommodation of vessels of different sizes. Lastly,

one of the legs is continued in the upright iron rod, on which a clamp may be held for the support of a reflux condenser.

Evaporation may also be carried on by distillation, with condensation of the solvent if this is of value.

When it is desirable to evaporate a liquid rapidly without much increase of temperature, this may be done by distillation under diminished pressure, at the ordinary temperature or a little over it. In this case the liquid is contained in a strong, round-bottomed flask, and a tube drawn to a fine capillary passes into the liquid. For receiver a distilling flask or pump flask is taken, and this is exhausted by the pump, with an interposed empty bottle in case of accident from a back-flow of water. The capillary above referred to admits a stream of minute air-bubbles through the liquid, which secures regular boiling.

The vacuum desiccator (Figs. 19, 20), may also be used for rapid evaporation at the ordinary temperature.

DRYING.

20. Desiccators. A desiccator is a vessel in which a dry atmosphere can be maintained, and which can be made gas-tight.

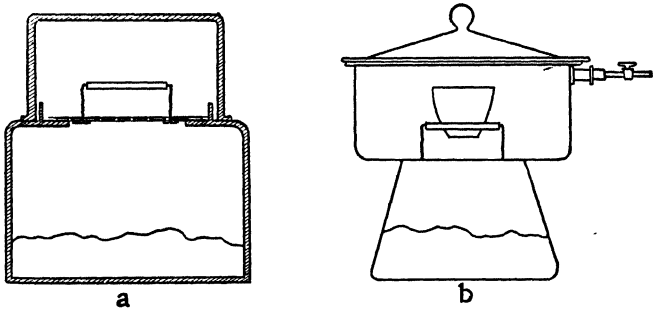

Fig. 19.

It is employed for a variety of purposes. Crucibles are allowed to cool, before weighing, in the desiccator; weighing bottles

containing substances for analysis may be kept therein ; crystals may be dried, or liquids evaporated, especially in the vacuum form of apparatus. Two forms are shown in Fig. 19, and a third in Fig. 20. The drying agent, sulphuric acid, with or without pumice, or anhydrous calcium chloride, is placed in the lower part of the vessel. Calcium chloride is preferable to a liquid, in an apparatus which has to be carried to and fro, and for vacuum desiccators sulphuric acid should not be used. The

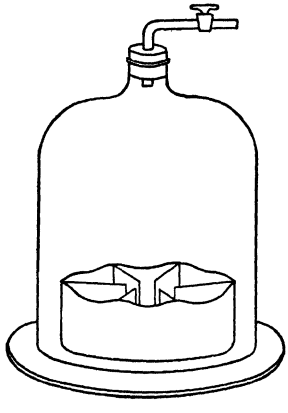

Fig. 20.

under edge of the cover is slightly greased. The bell-jar (Fig. 20) has the lower rim well ground, and stands on a thick ground glass plate. The drying agent is placed in the porcelain trough, on which a dish or crucible may be laid. The bell-jar is closed by a stopper and glass tap, so that, like Fig. 20, *b*, it may be exhausted, and the tap then closed. A good vacuum desiccator should preserve the vacuum for several days, but this should be tested, and the exhaustion repeated.

The drying of a solid substance may be assisted greatly by spreading it on a **porous clay plate**, especially if it be finely divided and retentive of moisture. The clay absorbs the

water slowly ; the drying may be further accelerated by placing the plate in the vacuum desiccator.

21. Ovens. For drying at higher temperatures, water, steam or hot-air ovens are employed. The construction of a water-oven is shown, partly in section, in Fig. 21. It consists of a double-walled box, usually made of copper, the water being contained in the space between the walls. The glass gauge at

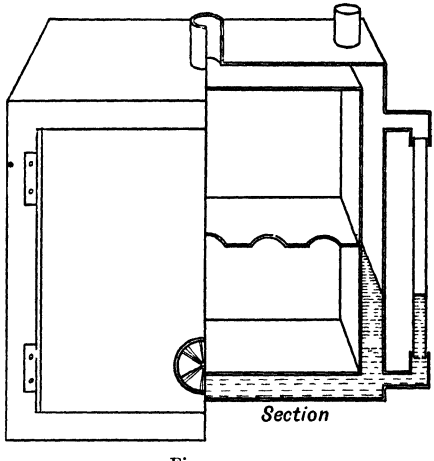

Fig. 21.

the side shows the level of water. A constant-level device may also be fitted.

The steam oven is of similar construction, the steam circulating through the space between the inner and outer walls. A number of these ovens are generally built together, the steam-space surrounding each compartment.

For temperatures below or above 100°, similar ovens may be used, with other liquids, or hot air may be circulated through the walls.

The air-oven (Fig. 22) need be only a simple box, and is made of sheet copper or iron. The outside is sometimes covered

with asbestos board to diminish the loss of heat. A thermometer is inserted in the top, and the temperature may be kept constant if desired by using a thermo-regulator such as that already described (Fig. 7, par. **7**).

Great care must be exercised in the drying of all substances which are affected by heat, as, *e.g.* salts containing water of

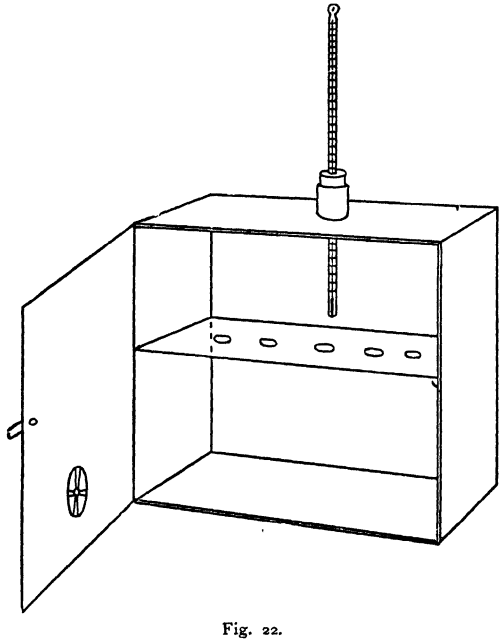

Fig. 22.

crystallisation. Such bodies must, in general, be dried at a low temperature.

22. The drying of gases. The operations of washing and drying gases are continually used in the laboratory, the general procedure being to bubble the gas through the liquids in wash-bottles. An ordinary bottle fitted as shown in Fig. 23, *a*, will serve for this purpose. A ground-in top carrying the two

tubes is often fitted. This has the advantage of being entirely made of glass, but the stopper is sometimes loosened by the pressure of gas. A better form is the Drechsel wash-bottle

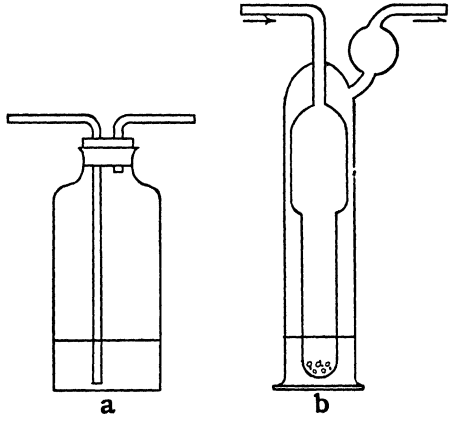

Fig. 23.

(Fig. 23, *b*), which is all of glass and in one piece. The entrance tube is widened inside, so that in the event of a back-pressure the liquid cannot reach the upper part of the tube.

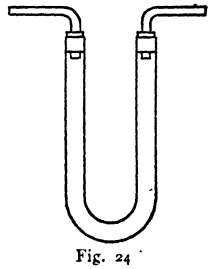

Fig. 24

Water may be used for removing soluble impurities from gases which are themselves sparingly soluble in water. If the gas is soluble in water, its saturated solution may be employed to wash it. For drying, sulphuric acid is generally useful.

To ensure efficient washing or drying, however, it is not enough to use wash-bottles in this manner. The gas should be passed through large U-tubes (Fig. 24) which are filled with chips of pumice or glass beads, drenched with water for washing, or with sulphuric acid for drying. Calcium chloride may be used

for drying most gases. For ammonia, caustic potash or quick-lime in small pieces is used, and these may be placed in a drying tower (Fig. 25), resting on the perforated lead

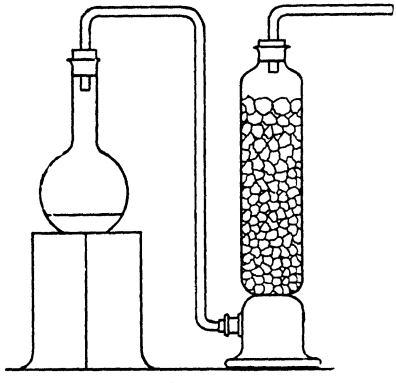

Fig. 25.

plate. For the most complete drying phosphorus pentoxide is used, and should be dusted over the glass beads in the U-tube, so that the passage does not become stopped by the pasty metaphosphoric acid.

Liquids may be dried by the use of the above or other materials, the liquid and the desiccating agent being placed together in a dry flask, which is then corked and allowed to stand for several hours to effect complete removal of the moisture. Care must be taken to avoid the use of a dehydrating agent which is soluble in, or has a chemical action upon, the liquid to be dried. For example, basic liquids like aniline must not be dried with acid agents such as phosphorus pentoxide, nor yet with calcium or zinc chlorides, which also unite with bases; on the other hand, caustic potash or lime, in small lumps, may be used. For ethereal salts, substances of neutral reaction, such as anhydrous sodium sulphate, are best.

The dried liquid should always be removed from the dehydrating agent before distilling.

SECTION I.

PREPARATIONS.

INSTRUCTIONS TO STUDENTS.

BEFORE commencing a preparation make certain that you understand the reactions involved. Read carefully through the whole of the instructions, and if anything is not clear, have it explained before proceeding. The quantities of materials to be used are in most cases given. Compare them with the formula weights, and if the proportions do not agree, that is, if an excess of one or other material is employed, find out why this is so.

In cases where an apparatus has to be devised, or put together from a description in the text, make a drawing of the apparatus you propose to use, and submit it for approval. When the apparatus has been fitted up, do not commence the experiment until it has been examined and approved by the teacher. In all cases follow carefully the instructions given.

Enter all work in the note-book at the time of observation, leaving nothing to be written up afterwards from memory. If your observations do not agree with the text, make a note of the fact. Weigh all finished products, and note the amount in your book. Calculate wherever possible the theoretical yield of product from the quantity of the original substance used, and deduce the percentage of the theoretical yield obtained in your experiment. Make a note, so far as you can, of reasons for the deficiency.

Before throwing away any liquors or residues, consider carefully whether you can make any further use of them.

A. INORGANIC COMPOUNDS.

THE ALUMS.

23. The alums have the general formula

$$R_2SO_4 . M_2(SO_4)_3 . 24H_2O,$$

where R is a monovalent element or group and M may be either aluminium, iron, chromium, manganese, etc. The alums are all isomorphous.

Crystallisation of Potash Alum.

$$K_2SO_4 . Al_2(SO_4)_3 . 24H_2O.$$

Weigh out 200 grams of potash alum, dissolve in water, filter if necessary and allow to cool. If crystals separate on cooling, add water to dissolve them. Allow the solution to stand in a large crystallising dish (Fig. 9), covering the dish with a sheet of paper to protect the solution from dust. From the crystals first formed pick out those free from adhering crystals. Transfer the clear solution to a similar dish, place the selected crystals in it and allow them to grow. Each day if necessary remove the selected crystals and place in the clear solution as before, after redissolving any smaller crystals which may have separated. The crystals will be octahedral in shape, but unless turned (par. **13**) on different faces, to allow each face the same opportunity to grow, irregular octahedra will be obtained.

The 200 grams of alum may be replaced by molecular proportions of potassium sulphate, K_2SO_4, and aluminium sulphate, $Al_2(SO_4)_3 . 18H_2O$.

9·5 grams of potash alum dissolve in 100 grams of water at 10° C.

Alum is chiefly used as an aluminium mordant in dyeing.

Crystallisation of Chrome Alum.

$$K_2SO_4 . Cr_2(SO_4)_3 . 24H_2O.$$

The solution obtained in the preparation of aldehyde may be used (par. **120**), or one prepared by passing sulphur dioxide into

a solution of 50 grams of potassium dichromate and 20 grams of sulphuric acid in one litre of water, until the reduction is complete. The temperature should not exceed 60-70° C. during the reduction and subsequent crystallisation. Otherwise the alum is obtained in the green modification, which is more soluble and more difficult to crystallise. The crystals are obtained as in the previous preparation. They are isomorphous with those of potash alum (compare them) and crystals of either substance, when placed in a solution of the other, will continue to grow (par. **12**).

$$K_2Cr_2O_7 + H_2SO_4 + 3SO_2 = K_2SO_4 + Cr_2(SO_4)_3 + H_2O.$$

The crystals of chrome alum are deep violet in colour, and are efflorescent. They melt in their water of crystallisation at 89° C.

Chrome alum is used as a chrome mordant, and in chrome tanning.

Ferrous Ammonium Sulphate.

$$FeSO_4 . (NH_4)_2SO_4 . 6H_2O.$$

24. Dilute 50 c.cs. of concentrated sulphuric acid to 200 c.cs., pouring the acid into the water in small quantities at a time. The mixture should be continually shaken. Divide the solution into two equal parts. Neutralise one part with ammonium hydrate, boiling to expel any excess of ammonia, and warm the other with iron filings (in the fume cupboard) till no more iron will dissolve. Filter the solutions into the same crystallising dish, add a few ccs. of dilute sulphuric acid to keep the solution clear and prevent the formation of basic sulphate of iron, and allow to crystallise.

$$H_2SO_4 + 2NH_4OH = (NH_4)_2SO_4 + 2H_2O.$$

$$H_2SO_4 + Fe = FeSO_4 + H_2.$$

The substance may be purified by recrystallisation.

Molecular proportions of ferrous sulphate, $FeSO_4 . 7H_2O$, and ammonium sulphate, $(NH_4)_2SO_4$, may be used.

Ferrous ammonium sulphate crystallises in transparent bluish-green monoclinic crystals, and, being stable in the air, is used for the standardisation of solutions used in the volumetric estimation of iron. 17·5 grs. of the salt dissolve in 100 grs. of water at 12° C.

25. **Nickel Potassium Sulphate,**

$NiSO_4 . K_2SO_4 . 6H_2O$,

and **Copper Ammonium Sulphate,**

$CuSO_4 . (NH_4)_2SO_4 . 6H_2O$,

may be prepared from molecular proportions of the sulphates and the crystals compared with each other and with those of ferrous ammonium sulphate.

Sodium Sulphate.

(Glauber's salt), $Na_2SO_4 . 10H_2O$.

26. In the preparation of hydrogen chloride (par. **32**), if sufficient sulphuric acid be used and if all the common salt be decomposed by heating gently, sodium bisulphate is left.

Add water to the residue to dissolve any solid matter and neutralise the liquor with sodium hydroxide solution, testing a drop of the liquid on litmus paper. Evaporate until a little taken in a test-tube and cooled under the tap deposits crystals. Filter if necessary and allow to crystallise.

Sodium sulphate crystallises from *cold* solutions as a decahydrate in monoclinic prisms, which are efflorescent. Glauber's salt is largely used in dyeing, and also as a purgative. Note the solubility curve of the salt (Fig. 8). The decahydrate is decomposed at the temperature represented by the maximum of the curve, and above this temperature the solution contains the anhydrous salt.

Potassium Nitrate, KNO_3,

27. Weigh out molecular proportions of potassium chloride, KCl, and sodium nitrate, $NaNO_3$, dissolve the mixture in boiling water, evaporate till crystals of sodium chloride begin to settle out, filter hot and allow to cool. Crystals of potassium nitrate form and may be purified by recrystallisation. The mother liquor should be evaporated for a second crop of potassium nitrate crystals.

$$KCl + NaNO_3 = KNO_3 + NaCl.$$

As Chili saltpetre contains chlorides, bromides, iodides and sulphates of sodium and magnesium with traces of iron salts, it should first be purified, or a pure sodium nitrate used.

The student should note the following solubilites :

	At 15° C.	At 100° C.
KNO_3	26·2	247
KCl	33·4	59
NaCl	35·9	39
$NaNO_3$	83·5	180

Potassium nitrate crystallises in long rhombic prisms. It is largely used in pyrotechnics, in making gunpowder and other explosives, and in the laboratory as an oxidising agent.

Purification of Common Salt.

28. Make 500 c.cs. of a saturated solution of common salt in water. Place the clear solution in a wide beaker and pass in hydrochloric acid gas. Owing to the great solubility of the gas in water, the liquid must be prevented from rushing back into the generator.

This may be effected by delivering the gas from the mouth of an inverted funnel dipping just below the surface of the liquid. Sodium chloride is precipitated owing to its slight solubility in a concentrated solution of the acid (**199**). but magnesium chloride, the chief impurity, is much more soluble and is not precipitated.

Filter by suction, wash with pure concentrated hydrochloric acid, partially dry with filter paper, then in the air oven, and finally by heating in a porcelain dish, to remove the last traces of hydrochloric acid.

Purification of Oxalic Acid.

29. The commercial oxalic acid contains oxalates. Place 50 c.cs. of hydrochloric acid in a porcelain dish, dilute with water, heat, and add 100 grs. of oxalic acid in small portions, stirring all the time till the solution is saturated. Allow to settle while kept warm on the steam-bath. Pour off the clear liquid and cool rapidly. Filter, wash with *cold* water, redissolve, filter if necessary and allow to crystallise slowly. Drain the crystals at the pump and dry in a desiccator.

PREPARATION OF THE GASES REQUIRED IN SUBSEQUENT EXPERIMENTS.

For the experiments involving the use of a gas, a constant stream will be required. The following methods will be found convenient.

Chlorine.

30. The liquid chlorine now supplied in cylinders by most dealers is a convenient source of the gas when large quantities are required. The gas may be obtained from common salt as follows:

In a flask of 1½ litres capacity fitted with a good cork, safety funnel and delivery tube, place a cold mixture of 110 c.cs. water and 150 c.cs. strong sulphuric acid. To this add an intimate mixture of 120 grams common salt with an equal weight of powdered manganese dioxide. There is no action in the cold, but on warming the mixture on a sand-bath or in a water-bath a slow and continuous stream of chlorine is evolved. The gas should be washed with water to free from hydrochloric acid, and may be dried if necessary by passing through sulphuric acid. (See par. **22**.)

The above quantities will give about 20 litres of chlorine. In cases where definite quantities are required, the student should calculate the amounts to be used.

$$2NaCl + MnO_2 + 2H_2SO_4 = Na_2SO_4 + MnSO_4 + 2H_2O + Cl_2.$$

Chlorine may also be obtained readily from a mixture of strong hydrochloric acid and granular manganese dioxide, or coarsely powdered potassium dichromate, heated on wire gauze over a small flame. By regulating the flame the gas may be obtained at the requisite speed.

$$MnO_2 + 4HCl = MnCl_2 + 2H_2O + Cl_2.$$

$$K_2Cr_2O_7 + 14HCl = 2KCl + Cr_2Cl_6 + 7H_2O + 3Cl_2.$$

For another method see the preparation of sodium hypochlorite (par. **38**).

Hydrogen.

31. A Kipp's generator is charged with commercial granulated zinc, and a mixture of equal volumes of strong hydrochloric acid

and water, or a cold mixture of one volume of strong sulphuric acid with two volumes of water.

The gas liberated by ordinary zinc contains small quantities of arseniuretted hydrogen. This may be obviated to some extent by using platinised or coppered zinc, preferably that free from arsenic and antimony.

The ordinary gas may be purified by washing through potassium permanganate to remove arsenic and antimony (but this introduces slight traces of oxygen), then through caustic soda or potash to remove acids, and finally dried by passing through a sulphuric acid or calcium chloride tube.

Hydrochloric Acid.

32. A Kipp's generator with lumps of rock salt or fused common salt and concentrated sulphuric acid is convenient, and supplies the gas practically pure and dry.

The gas may also be obtained from common salt, using an apparatus similar to that described for the preparation of chlorine. The salt is covered with a cold mixture of sulphuric acid and water in the proportion used for chlorine. No gas is evolved in the cold, but on warming gently a continuous stream of the gas is produced. This may be dried in a sulphuric acid tube, or with calcium chloride. The spent acid may be used for making Glauber's salt ; see Appendix, **376.**

Ammonia.

33. The gas may be obtained pure by heating a mixture of pure ammonium chloride and lime. For most purposes it may be obtained sufficiently pure by warming the strong aqueous solution in a small flask, and drying in a lime tower (Fig. 25). If much gas is to be prepared a preliminary partial drying may be effected by passing the gas through a small quantity of the strong aqueous solution contained in a wash-bottle cooled by ice and salt.

Carbon Dioxide.

34. Chips of marble, and hydrochloric acid diluted with an equal volume of water, form the most convenient source of

the gas. A Kipp's apparatus is usually kept charged and ready for use. The gas should be washed in water to free from hydrochloric acid, and may be dried by passing through sulphuric acid.

Small quantities of the gas may also be made by heating sodium bicarbonate or magnesium carbonate.

Carbon Monoxide.

35. When formic acid or oxalic acid is heated with strong sulphuric acid, carbon monoxide is evolved, in the latter case mixed with an equal volume of carbon dioxide.

$$H.COOH = H_2O + CO.$$
$$(COOH)_2 = H_2O + CO + CO_2.$$

1. In a small distilling flask heat some concentrated sulphuric acid, and allow formic acid to drop slowly in from a tap-funnel. Collect the gas over water.

2. From oxalic acid the gas may be obtained by heating 50 grams crystallised oxalic acid with enough strong sulphuric acid to cover it. The carbon dioxide is removed by passing the evolved gases through a strong solution of caustic potash.

3. Potassium ferrocyanide also gives carbon monoxide when heated with strong sulphuric acid.

$$K_4FeC_6N_6 + 6H_2SO_4 + 6H_2O$$
$$= 2K_2SO_4 + 3(NH_4)_2SO_4 + FeSO_4 + 6CO.$$

Cover the powdered ferrocyanide in a small flask with strong sulphuric acid, and heat over wire gauze. The action is easily regulated, and the supply of gas may be stopped by cooling the flask.

The gas should be washed in a strong solution of caustic soda or potash, and may be dried with sulphuric acid or calcium chloride.

Sulphur Dioxide.

36. The liquid sulphur dioxide supplied in syphons is very pure. If this is not available the gas may be conveniently prepared

by dropping concentrated sulphuric acid from a tap-funnel on to a quantity of solid sodium bisulphite or of the commercial bisulphite solution, contained in a bottle or flask. Sulphur dioxide gas is immediately liberated, and may be dried, if necessary, by means of sulphuric acid.

Sulphuretted Hydrogen.

37. Ferrous sulphide is readily decomposed by dilute hydrochloric or sulphuric acid, liberating sulphuretted hydrogen. The gas may be generated in a Kipp's apparatus. Hydrochloric acid (equal volumes of acid and water) is preferable to sulphuric acid, as ferrous chloride is more soluble than the sulphate, and there is therefore less risk of the salt crystallising and blocking the apparatus. The gas should be washed with water to remove hydrochloric acid.

Since sulphide of iron often contains particles of free iron, the gas obtained in this way contains a little hydrogen. For ordinary purposes, however, this is not objectionable.

Many forms of apparatus are employed for the preparation of sulphuretted hydrogen. Any apparatus used for hydrogen or carbonic acid gas, such as a Woulff's bottle with thistle funnel and delivery tube, will also serve for the preparation of sulphuretted hydrogen. When a large quantity of the gas is required, this may be made by using two large bottles connected with each other by means of caoutchouc tubing passing between tubulures at the bottom, one bottle containing sulphide and the other the acid. The acid bottle is raised or lowered when necessary.

In most forms of generator the acid is largely wasted, partly because of the imperfect arrangement for mixing the acid, as in the Kipp's generator, and also because the acid when nearly neutralised ceases to act sufficiently rapidly on the sulphide. It therefore has to be renewed before it is exhausted. To obviate this, the method may be used of dropping the acid slowly on to the sulphide contained in a tall glass tower. Before the liquid reaches the bottom of the column of sulphide the acid is in general almost completely neutralised.

PREPARATION OF VARIOUS COMPOUNDS BY THE DIRECT ACTION OF CHLORINE.

Sodium Hypochlorite.[1]

$NaOCl$.

38. When chlorine gas is passed into a cold solution of caustic potash or soda, a mixture of chloride and hypochlorite is obtained.

$$2NaOH + Cl_2 = NaCl + NaOCl + H_2O.$$

The reaction is quantitative, and can be employed to prepare solutions containing definite amounts of the hypochlorite.

The chlorine may be prepared by the action of potassium permanganate on hydrochloric acid.

Weigh out 25 grams potassium permanganate and place in a half litre distilling flask fitted with a tap funnel. Arrange to pass the chlorine gas first through a wash bottle with water to free from hydrochloric acid, and then into a solution of 50 grs. caustic soda in 400 c.cs. water, contained in a bottle surrounded by ice so that the temperature may be kept below 5° C. To the permanganate add slowly 150-170 c.cs. strong hydrochloric acid by means of the tap funnel. The reaction is at first instantaneous, chlorine being evolved, but towards the end the liquid should be heated until all the permanganate is reduced and no more chlorine is obtained.

$$K_2Mn_2O_8 + 16HCl = 2KCl + 2MnCl_2 + 8H_2O + 5Cl_2.$$

The chlorine is completely absorbed by the soda. Now make the solution of hypochlorite up to 500 c.cs.; calculate the quantity of hypochlorite contained therein, and estimate the amount by the method given in par. **275**. If the experiment has been well conducted, practically the theoretical amount will be found.

Potassium Chlorate.

$KClO_3$.

39. Chlorine gas acts differently from the above on hot solutions of caustic alkalies, producing a mixture of chlorate and chloride. $6KOH + 3Cl_2 = 5KCl + KClO_3 + 3H_2O$.

[1] Graebe, *Berichte*, 35, 2753 (1902).

Dissolve 50 grams caustic potash in 250 c.cs. water in a half-litre beaker, and heat on a sand-bath to 65°-75° C. throughout the experiment. Pass in chlorine gas prepared by one of the methods given, using a little more than the quantities of material which will supply the necessary chlorine. The gas should be washed in water to remove hydrochloric acid, and is introduced into the alkali by means of an inverted funnel just touching the surface of the solution. When the reaction is over, filter the solution if necessary, and evaporate slowly to about 180-170 c.cs. On cooling, potassium chlorate will crystallise, but the chloride will remain in solution. Filter at the pump, wash the crystals twice with small quantities of cold water, and set aside to dry. Concentrate the filtrate further, and examine each crop of crystals for chlorate and chloride. Yield of chlorate, 10-15 grs.

Potassium chlorate crystallises from water in colourless transparent monoclinic tables. These melt at 334° C., and begin to decompose at 352°, evolving oxygen. The salt is largely used for the preparation of oxygen, and generally as an oxidising agent.

Potassium Chloride.

KCl.

40. The later crystalline separations obtained in the above experiment, consisting of chloride and chlorate, may be re-crystallised together, and pure chloride obtained. This crystallises in cubes, like sodium chloride. It is largely used for the manufacture of other potassium salts.

Potassium Perchlorate.

$KClO_4$.

41. Place 25 grams of pure potassium chlorate in a porcelain dish, and heat carefully on a sand-bath, stirring constantly until the melted chlorate just begins to solidify. When a small sample of the substance, warmed with hydrochloric acid, gives off little or no chlorine, the reaction is complete.

$$4KClO_3 = 3KClO_4 + KCl.$$
$$2KClO_3 = KClO_4 + KCl + O_2.$$

Allow to cool, grind the mass in a mortar with a little water to remove most of the chloride, pour off this liquid and warm the residue with a little hydrochloric acid to decompose any unchanged chlorate. Filter at the pump, wash with a little cold water, and crystallise the residue of perchlorate from hot water. The salt separates in small rhombic crystals. Yield, 10-12 grs.

When heated the perchlorate decomposes into oxygen and potassium chloride.

Anhydrous Ferric Chloride.

$FeCl_3$.

42. A piece of combustion tube about 10 inches long is fitted at each end with a cork carrying a tube, so that dry chlorine gas may be passed through, the excess being absorbed in caustic soda. A porcelain boat is filled with iron filings free from grease (by washing with benzene if necessary), and inserted in the combustion tube near to the end at which the chlorine enters. The iron is heated to dull redness in the stream of dry gas, and anhydrous ferric chloride sublimes on to the cool part of the tube and is there deposited in dark brown hexagonal plates, which have a metallic lustre and appear red by transmitted light. The crystals are deliquescent and easily soluble in water, alcohol and ether. They should be transferred to a tube and sealed up.

Aluminium Chloride.[1]

$AlCl_3$.

43. Arrange an apparatus similar to that used for ferric chloride, but use a longer combustion tube, and heat in a small furnace (Fig. 26). The tube is charged with clippings of aluminium foil, and the chloride, which is very hygroscopic, should be sublimed directly into a dry bottle, into which the end of the combustion tube is inserted through a gas-tight cork, and from which the excess of chlorine is conducted to an absorber.

[1] Gattermann, *Practical Methods of Organic Chemistry.*

Pure aluminium chloride forms colourless hexagonal crystals. The commercial product is often yellow, owing to admixture of ferric chloride. The chloride absorbs water vapour, and is

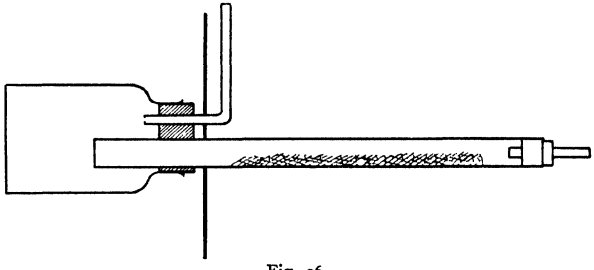

Fig. 26.

soluble in alcohol and ether. It may also be obtained by strongly heating a mixture of alumina and carbon in chlorine gas, as described below for chromium chloride.

Chromic Chloride.

$CrCl_3$.

44. Use the same apparatus as for aluminium chloride, but without the bottle as receiver. Grind up 5-10 grams of chromium sesquioxide and an equal weight of starch into a thick paste with a little cold water. Mould this into balls of the size of peas, dry these carefully and heat on an iron tray until the starch is completely charred. Transfer to the combustion tube, and heat to redness in the stream of dry chlorine. Chromic chloride is obtained in beautiful violet scales, almost insoluble in cold water.

Stannic Chloride.

$SnCl_4$.

45. In a wide glass tube about a foot long and closed at one end, fit an upright condenser and a delivery tube. Fill the wide tube with granulated tin, and pass in dry chlorine gas. The delivery tube should reach at first to the bottom, and should be withdrawn as the liquid tin chloride forms, so that the end just

dips into the liquid. When nearly all the tin is converted into chloride, pour the liquid into a dry distilling flask and collect the portion boiling at 118-122° C.

Tin tetrachloride is a colourless, mobile liquid, fuming in air. Sp. gr. 2·234 at 15°. B. Pt. 120° C. It forms several hydrates with water, of which the crystalline pentahydrate, $SnCl_4 . 5H_2O$, is used as a mordant in dyeing.

Phosphorus Trichloride.

PCl_3.

46. Place 10 grams amorphous phosphorus in a small retort. Insert the stem through a good cork into a distilling flask as receiver, and on the side tube of this, place a small calcium chloride tube. From this lead a tube to an absorber for the excess of chlorine.

Pass dry chlorine gas over the phosphorus, and heat this gently on a sand-bath. If any solid pentachloride is formed, raise the delivery tube further from the phosphorus. The receiver should be kept cool in a vessel of water. Redistil the trichloride, keeping out moisture in a similar manner.

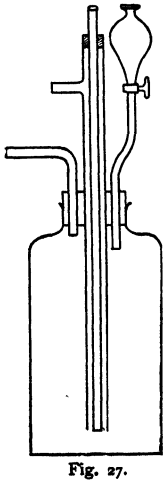

Fig. 27.

Phosphorus trichloride forms a colourless, fuming liquid ; spec. grav. 1·613 at 0° C. B. Pt. 76° C. The vapour is very irritating and poisonous.

Phosphorus Pentachloride.[1]

PCl_5.

47. Fit up an apparatus like that shown in Fig. 27. Through the upper delivery tube dry chlorine is admitted, the excess leaving by the lower tube, which is protected from moisture by a calcium chloride tube. Phosphorus trichloride is introduced, a few cubic centimetres at a time, from the tap-funnel, and when the pentachloride formed appears quite dry,

[1] Gattermann, *Practical Methods of Organic Chemistry.*

the reaction is over. Thus any desired quantity may be prepared; the chlorine delivery tube is raised to keep clear of the pentachloride, and if necessary it may be cleared by means of the glass rod provided. Preserve in the same bottle, well stoppered. Yield, quantitative.

Sulphur Monochloride.

S_2Cl_2.

48. The apparatus used for preparing phosphorus trichloride may also be used for this substance. In the retort place 20 grams dry sulphur, lead in dry chlorine and heat the sulphur gently. It melts and the monochloride distils as a light brown oily liquid. The receiver must be well cooled. The chloride may be purified by redistilling, excluding moisture.

Sulphur monochloride forms a clear, amber-coloured liquid, of specific gravity 1·7 and boiling at 138° C.

Sulphuryl Chloride.

SO_2Cl_2.

49. In a two-necked bottle place 20 grams of camphor, stand the bottle in cold water, and lead in dry sulphur dioxide gas so long as it is absorbed. The camphor liquefies. Now pass in dry chlorine until it is no longer absorbed, then sulphur dioxide, and so on until the volume of liquid no longer increases. Transfer to a dry distilling flask, and collect the fraction below 100°. Purify by redistillation. The higher boiling portion may be used again to prepare more.

Sulphuryl chloride is a colourless liquid, boiling at 70° C. It fumes strongly in air, and is decomposed by water into sulphuric and hydrochloric acids.

$$SO_2Cl_2 + 2H_2O = H_2SO_4 + 2HCl.$$

PREPARATION OF CHLORIDES BY MEANS OF HYDROCHLORIC ACID.

50. Chlorides may be prepared by one or more of the following methods.

(*a*) Direct union of chlorine with the element (**42-48**).

(*b*) Action of hydrochloric acid on the metal (**51-53**).

(*c*) Action of hydrochloric acid on the oxide, hydroxide or carbonate of the metal (**53, 54, 56, 57**).

(*d*) By precipitation of insoluble chlorides, as AgCl.

Examples of the first method have already been given. The other methods are applicable to the salts of any metal and may be used with other acids than hydrochloric.

Anhydrous Ferrous Chloride.

$FeCl_2$.

51. In a bulb tube of combustion glass or a piece of combustion tubing 10-12″ long place a few grams of clean iron filings. Pass dry hydrochloric acid through the tube, and when air is expelled, heat the iron filings. The vapour of ferrous chloride condenses on the cooler parts of the tube in colourless, six-sided, shining scales, and by suitable heating may be obtained free from the iron and scraped from the tube. The product should be immediately placed in a dry test tube which should then be sealed by softening and drawing out.

$$Fe + 2HCl = FeCl_2 + H_2.$$

Stannous Chloride.

(Tin Salt.)

$SnCl_2 . 2H_2O$.

52. Dissolve 25 grams of granulated tin in 50 c.cs. strong hydrochloric acid, diluted with 25 c.cs. of water, in a ½ litre flask, allow the solution to settle, and decant from any residue into an Erlenmeyer flask. Close this with a cork, and set aside to crystallise. The hydrated salt crystallises in transparent monoclinic prisms, which melt in their water of crystallisation at 40° C., and lose all the water in a vacuum over sulphuric acid. Yield, 35-40 grs.

Stannous chloride is a powerful reducing agent, combining with either chlorine or oxygen. When the solution is exposed to air, or diluted with much water, a basic chloride of the composition $2Sn(OH)Cl . H_2O$ is deposited.

Zinc Chloride.

$ZnCl_2$.

53. This may be obtained by neutralising hydrochloric acid with zinc, or its oxide or carbonate. The solution so obtained is evaporated until the temperature reaches 240° C. Care must be taken that none of the substance comes in contact with the hands. Allow to cool, break into lumps and bottle immediately, making the stopper air-tight with paraffin.

Zinc chloride forms a white, deliquescent mass. It is used in the laboratory as a dehydrating agent, in surgery as a caustic, and in the textile trade for weighting cotton goods. It is also used as an antiseptic, as a preservative for timber, and in wool dyeing.

Cupric Chloride.

$CuCl_2 . 2H_2O$.

54. Use pure copper oxide, prepared by dissolving copper in nitric acid, crystallising and heating the nitrate until decomposition to oxide is complete. Warm the oxide with dilute hydrochloric acid, using the oxide in slight excess. Filter and allow to crystallise. Rhombic prisms or needles of the above composition separate on standing. These are deliquescent, and are soluble in alcohol.

Cuprous Chloride.

CuCl.

55. (*a*) A small quantity may be prepared as follows: In a test tube place a few copper turnings, cover with strong hydrochloric acid, add one or two drops of strong nitric acid and boil for five minutes. Pour the liquid into water. The cuprous chloride is precipitated as a white powder.

(*b*) Copper oxide may be substituted for nitric acid.

Place in a ¼-litre flask 20 grs. of copper and 26 grams of copper oxide and add 90 c.cs. of strong hydrochloric acid. Connect with an upright condenser and boil for two hours. Pour all the contents into water, filter quickly, using suction, and wash the precipitate with sulphurous acid, followed by glacial acetic acid.

Heat the product in a porcelain dish on the water-bath till no smell of acetic acid can be detected. Keep in a stoppered bottle.

$$Cu + CuO + 2HCl = 2CuCl + H_2O.$$

(*c*) Heat a solution of 50 grs. copper sulphate and 24 grs. of common salt to 60-70° C. Pass sulphur dioxide through the solution till no further precipitate of cuprous chloride is obtained. Filter, wash and dry as before.

$$2CuSO_4 + 6NaCl + 2H_2O + SO_2 = 2CuCl + 3Na_2SO_4 + 4HCl.$$

Cuprous chloride is insoluble in water, but soluble in hydrochloric acid and ammonia. These solutions are used for the absorption of carbon monoxide. Acetylene is also absorbed by the ammoniacal solution.

Calcium Chloride.

$CaCl_2$.

56. Use the solution of calcium chloride from the carbon dioxide generator. Neutralise the liquid by boiling with a small amount of milk of lime. This will precipitate any iron present. Allow to settle, pour off the clear liquid as far as possible, and filter the remainder. Evaporate until a portion taken on a glass rod rapidly solidifies. To make the product porous, add a few c.cs. of strong hydrochloric acid. Dry by heating in an iron pan, but do not allow the substance to fuse.

Calcium chloride is extremely hygroscopic, and is largely used as a desiccating agent. It combines with ammonia, forming the compound $CaCl_2 . 8NH_3$, and cannot therefore be used for drying ammonia.

Crystallised calcium chloride, $CaCl_2 . 6H_2O$, may be obtained by *slowly* evaporating a concentrated solution obtained as above.

Barium Chloride.

$BaCl_2 . 2H_2O$.

57. (*a*) **From Witherite.** Place 100 grams powdered witherite in a large porcelain dish and mix to a paste with 100 c.cs. water. Add slowly, with constant stirring, a mixture of 75 c.cs. strong hydrochloric acid and 100 c.cs. water. Heat finally

on the steam-bath and stir well till all effervescence ceases. Now add a slight excess of finely powdered witherite and evaporate to dryness. This precipitates iron, calcium, etc., which commonly occur as impurities in the witherite. Extract the residue with half a litre of boiling water, filter, acidify the filtrate with hydrochloric acid, evaporate to half its bulk and allow to crystallise. Concentrate the mother liquor until no more crystals can be obtained and then recrystallise the whole from distilled water. Yield, about 100 grams.

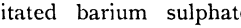

$$BaCO_3 + 2HCl = BaCl_2 + H_2O + CO_2.$$

(*b*) **From Heavy Spar.** Mix 50 grams finely powdered barytes (or precipitated barium sulphate) with 10 grams powdered charcoal and heat to bright redness in a covered clay crucible in the muffle furnace for 1-2 hours. When cold, extract the mass with boiling water, filter and add hydrochloric acid to the filtrate till the barium sulphide is all decomposed. Crystallise and purify the barium chloride as above. Yield, about 35 grams.

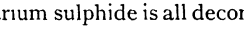

$$BaSO_4 + 4C = BaS + 4CO.$$

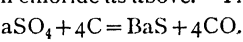

$$BaS + 2HCl = BaCl_2 + H_2S.$$

(*c*) **From the Sulphate.** Mix 20 grams of finely powdered barium sulphate with 80 grams of anhydrous sodium carbonate. Fill a fireclay crucible with the mixture, and heat in the muffle furnace till fused. Add more of the mixture and again heat. Repeat until the whole is fused in the crucible, and heat strongly for half an hour. Allow to cool, lay the crucible on its side in water in a porcelain dish and boil to extract the soluble matter. (It will be found better to break the crucible and powder the contents before boiling with water.) Wash the residue by decantation through a filter paper. Add dilute hydrochloric acid to the residue in the dish until there is no further effervescence. Boil and filter through the same filter paper. The yellow colour of the filtrate is due to traces of iron from the crucible; this may be removed as in method (*a*). Evaporate the filtrate and allow to crystallise. The yield is not good.

Barium chloride is manufactured from barytes by roasting the powdered mineral with powdered coke, limestone and calcium chloride. The product is lixiviated and the

barium chloride crystallised. The student may try this method.

Chromyl Chloride.

CrO_2Cl_2.

57A. Mix 5 parts by weight of powdered potassium dichromate with 4 parts of sodium chloride, and place the mixture in a retort. Cover with strong sulphuric acid and distil :

$$K_2Cr_2O_7 + 4NaCl + 3H_2SO_4 = K_2SO_4 + 2Na_2SO_4 + 3H_2O + 2CrO_2Cl_2.$$

Red fumes are evolved, which condense in the neck of the retort to a dark reddish brown liquid, boiling at 116°. The distillate may be collected in a dry flask placed over the end of the retort, and resting in cold water.

Chromyl chloride may also be prepared by making a solution of chromium trioxide in strong sulphuric acid, adding hydrochloric acid, drop by drop, and then distilling.

Chromyl chloride is decomposed by water, giving a solution of chromic acid and hydrochloric acid. Its formation is made use of to detect chlorides in presence of bromides (see par. **179**, 4).

COMPOUNDS OF BROMINE AND IODINE.

Hydrobromic Acid.

HBr.

58. (*a*) In a flask fitted with tap funnel and delivery tube place 5 grs. amorphous phosphorus and 15-20 c.cs. water. Allow 10 c.cs. (30 grs.) of bromine to drop slowly from the funnel. Hydrobromic acid is produced :

$$5Br + P + 4H_2O = H_3PO_4 + 5HBr.$$

To free the gas from bromine, conduct it through a U-tube containing moist asbestos dusted with red phosphorus, and then absorb the gas in 100 c.cs. of water by means of an inverted funnel or retort, or a large pipette, just dipping into the liquid. Distil the acid and collect the constant boiling liquid (123-129°).

(*b*) Pass sulphuretted hydrogen through a mixture of bromine and water until the bromine is decolourised. Remove the excess of hydrogen sulphide with a current of air, filter from

sulphur and distil as above. Some sulphuric acid is also produced.

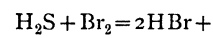

$$H_2S + Br_2 = 2HBr + S.$$

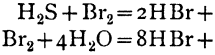

$$H_2S + 4Br_2 + 4H_2O = 8HBr + H_2SO_4.$$

(*c*) Carry out a similar experiment with sulphur dioxide gas. Leave a little free bromine, or add more bromine water until a slight yellow colour is obtained : remove the excess of bromine with air, and distil.

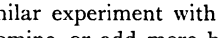

$$SO_2 + Br_2 + 2H_2O = 2HBr + H_2SO_4.$$

Potassium Bromide.

KBr.

59. (*a*) Place 20 grs. fine iron filings and 200 c.cs. water in a flask, and add slowly 30 grs. (10 c.cs.) bromine, shaking well after each addition. Bromides of iron are produced. To the liquid add now a solution of 25 grs. potassium carbonate so long as a precipitate is formed. Heat nearly to boiling, filter from the excess of iron and precipitated carbonate of iron, and evaporate the liquid. Potassium bromide crystallises in cubes with a saline taste. It is easily soluble in water, and is used in medicine as a sedative. Yield, about 35 grams.

(*b*) By the action of bromine on caustic potash, mixtures of bromide, hypobromite and bromate are obtained, according to temperature and concentration of the liquid (compare chlorine). If the liquid be evaporated to dryness and the residue gently ignited, pure potassium bromide is obtained. This may be redissolved and crystallised.

(*c*) Potassium or sodium bromide may also be obtained by neutralising waste hydrobromic acid solution (obtained in brominating benzene, etc.) with potassium or sodium carbonate, after removing free bromine with a stream of air. The dry residue left on evaporation may be used for the preparation of ethyl bromide, etc.

Potassium Bromate.

$KBrO_3$.

60. To a solution of 40 grs. caustic potash in 200 c.cs. of water, kept at a temperature of 70-80° in a water-bath, add carefully

drop by drop 15 c.cs. (45 grs.) of bromine. Transfer the liquid to a crystallising dish and set aside to cool. Potassium bromate separates, the bromide remaining in solution.

$$6KOH + 3Br_2 = KBrO_3 + 5KBr + 3H_2O.$$

It may be recrystallised from hot water, and separates in hexagonal crystals, sparingly soluble in cold water.

Potassium Iodide.

KI.

61. This salt may be prepared by the methods given for potassium bromide, but it is best prepared by the action of iodine on caustic potash and ignition of the dry residue. It crystallises in cubes, very soluble in water and having a sharp, saline taste.

Hydriodic Acid.

HI.

62. (*a*) This acid may be obtained from iodine, red phosphorus and water, as for hydrobromic acid. Place 5 grs. red phosphorus and 20 grs. iodine in the flask, and add water slowly from the dropping funnel until the mixture is covered. Heat finally on the sand-bath to complete the reaction.

(*b*) Pass sulphuretted hydrogen through a mixture of 20 grams powdered iodine and 200 c.cs. water. After a few minutes, when air is expelled from the flask, close the outlet tube, and allow the mixture to stand in contact with sulphuretted hydrogen, with frequent shaking, until all the iodine is dissolved. Remove excess of sulphuretted hydrogen with a stream of air, filter from sulphur, and distil in a current of hydrogen to prevent dissociation of the hydriodic acid. The strongest acid obtained by distillation at ordinary pressures boils at 127°C, and contains 57·7 per cent. of the acid. Collect from 125°-130°C.

(*c*) The acid may be obtained by the direct union of hydrogen and iodine. A hard glass bulb tube is packed with platinised asbestos, prepared by soaking asbestos in a solution of platinic chloride and igniting the dried fibre. Into one end of the tube is inserted the side tube of a small distilling flask containing

iodine, while the other end is connected with a U-tube filled with dry asbestos, from which a glass tube leads to the absorption flask containing water. Pure dry hydrogen is passed through the apparatus; the bulb of platinised asbestos

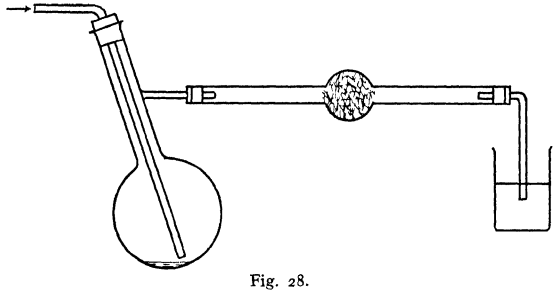

Fig. 28.

is heated to dull redness, while the distilling flask is gently warmed. A mixture of hydrogen and iodine vapour is thus carried over the platinised asbestos; hydriodic acid is produced and the uncombined iodine is deposited in the U-tube.

Hydriodic acid is an endothermic compound, and readily acts as a reducing agent (**181**, 1). It is so used in many organic reactions.

Iodic Acid.

HIO_3.

63. Place 10 grams iodine in a 250 c.c. round flask, add 100 c.cs. fuming nitric acid, and warm gently until all the iodine is oxidised. Add more nitric acid if required. Nitric oxide is evolved.

$$3I_2 + 10HNO_3 = 6HIO_3 + 10NO + 2H_2O.$$

Evaporate to dryness and heat the residue to 200° to remove all trace of nitric acid. Iodine pentoxide remains as a white powder. Redissolve this in a small quantity of water, and allow to evaporate, when iodic acid will separate in colourless rhombic crystals. It is easily soluble in water, and is reduced by sulphur dioxide, sulphuretted hydrogen, hydriodic acid, etc., with separation of iodine.

PREPARATION OF METALLIC OXIDES.

Cuprous Oxide.

Cu_2O.

64. (*a*) Mix together 20 grams cuprous chloride and 15 grams dry sodium carbonate, and heat gently in a covered crucible. Cuprous oxide is obtained as a non-crystalline red powder.

$$Cu_2Cl_2 + Na_2CO_3 = Cu_2O + 2NaCl + CO_2.$$

Extract the residue when cold with water, to remove sodium chloride and excess of sodium carbonate, filter, wash till free from chloride, and dry the residue of cuprous oxide.

(*b*) Dissolve 20 grams crystallised copper sulphate and 30 grams of Rochelle salt in 200-250 c.cs. water. Add a solution of 10 grams caustic soda or potash. A dark blue solution is obtained, which is known as Fehling's solution, and is used to estimate the cupric-reducing power of sugar solutions (**282**). To this add 15 grams of glucose in a little water, and warm on a sand bath until the copper is completely precipitated as cuprous oxide. Allow this to settle, wash by decantation several times with hot water, filter and complete the washing on the filter till free from alkali.

Cuprous oxide dissolves in strong hydrochloric acid to form cuprous chloride. It is converted by nitric acid into cupric nitrate, with evolution of nitrogen oxides, and by sulphuric acid into a mixture of cupric sulphate and metallic copper.

$$Cu_2O + H_2SO_4 = CuSO_4 + Cu + H_2O.$$

Manganous Oxalate. Manganous Oxide.

MnC_2O_4. MnO.

65. Dissolve separately in as little hot water as possible 20 grs. manganous sulphate and 12 grs. ammonium oxalate. Filter the two solutions if they are not quite clear, and mix together. Manganous oxalate is precipitated as a pale pink, crystalline powder. Drain on the pump, wash with a very little cold water, and dry on a porous plate. Place this dry powder in a piece of

hard glass tube 8-12 inches long, pass a stream of dry carbon dioxide gas, and heat gently with the burner until the oxalate is completely decomposed. Manganous oxide remains as a grey-green powder,

$$MnC_2O_4 = MnO + CO + CO_2,$$

which, on exposure to air, changes to higher oxides. Transfer it, while the carbon dioxide is still passing, to a strong tube closed at one end and then seal the tube.

Mercuric Oxide.

HgO.

66. Dissolve mercury in nitric acid and evaporate to dryness. Mix the residue with about an equal weight of mercury, and heat in the porcelain dish, in the fume chamber. The temperature should not be more than sufficient to decompose the nitrate. Use a glass rod to stir the mixture, and break up the pieces of mercuric nitrate. If the temperature is too high, much of the mercury will volatilise, and some of the mercuric oxide will be decomposed. Allow the residue to cool, add water and boil. Filter and wash with hot water to remove undecomposed nitrate. Dry and press through wash leather to remove unaltered mercury. The residue is red.

Mercuric oxide may also be prepared by adding a solution of sodium hydrate to a solution of a mercuric salt. The precipitate is mercuric oxide, and is yellow. It must be *well* washed with hot water to remove the caustic soda. The residue may be dried in an air oven.

Nickel Sesquioxide.

Ni_2O_3.

67. Dissolve 10 grams of pure metallic nickel in dilute nitric acid, make up the solution to 250 c.cs. with distilled water, and filter from any residue. Evaporate to dryness on the steam-bath. Nickel nitrate remains as a green crystalline residue. Transfer to a weighed porcelain dish. [If pure metal is not available, take 50 grams of pure nickel nitrate, free from cobalt, in a weighed porcelain dish.]

Ignite the nitrate, gently at first, to expel all water of crystallisation, in which the salt melts, and then strongly until no further change occurs, and the weight of the residue is constant. Abundant red fumes are evolved, and the green nitrate changes to the dark grey oxide.

The oxide dissolves in nitric or sulphuric acid evolving oxygen, and in hydrochloric acid with evolution of chlorine, and nickelous salts are produced. It is readily reduced, by heating to 200-300° in hydrogen, forming metallic nickel.

Many other oxides may be prepared by this method, as CuO, PbO, BaO, etc.

Chromium Sesquioxide.

Cr_2O_3.

68. Dissolve 20 grams chromium sulphate in 50 c.cs. distilled water, or use the chrome alum obtained in the preparation of aldehyde (par. **120**), heat and add dilute ammonia solution until no more precipitate is obtained. Boil for 15 minutes and allow the precipitate to settle. Decant the clear liquid and wash the precipitate by decantation with boiling water until free from ammonium sulphate. Filter on a fluted filter, and dry in the steam oven. Transfer to a crucible or dish and ignite to convert the hydrate to oxide, then grind to powder in a mortar. A dull green amorphous powder is left, almost insoluble in acids.

Chromium Hydroxide. Chrome

Guignet's Green.

$Cr_2O(OH)_4$.

69. Mix together 30 grams finely-powdered potassium dichromate and 30 grams crystallised boric acid, and enough water to make a thick paste. Place in fire-clay crucibles and heat to a low red heat. On cooling, extract the fused mass with water and boil to remove boric acid. The residue is a fine green powder, insoluble in water and acids, and is used as a green pigment. Yield, 15-18 grams.

Lead Peroxide.

PbO_2.

70. (*a*)[1] Dissolve 50 grams crystallised lead acetate in 200 c.cs. water in a large flask or porcelain dish and heat on the steam pan. Grind up 100 grams good bleaching powder with water, make up to 1,500 c.cs., shake well, and allow to settle. Filter the supernatant liquid and add it slowly to the hot solution of lead acetate, with constant stirring or shaking, until a filtered test portion gives no more brown precipitate on boiling with more of the bleaching powder. Continue heating for some time until the precipitated lead peroxide is dark brown in colour. Wash by decantation with hot water until the washings are free from chloride, drain on the pump and dry in the steam oven, or keep the peroxide as a paste under water. Yield, 25-30 grams.

(*b*) Mix 60 c.cs. strong nitric acid with 250 c.cs. water in a porcelain dish, warm gently on the steam-bath, and slowly stir in 70 grams red lead made into a paste with water. Two-thirds of the lead dissolves as nitrate, and lead peroxide remains.

$$Pb_3O_4 + 4HNO_3 = PbO_2 + 2Pb(NO_3)_2 + 2H_2O.$$

Heat on the steam-bath, stirring frequently, for half an hour; allow to settle, decant and wash by decantation as above till no lead can be detected in the washings. Yield, 20-22 grams.

From the filtered solution lead nitrate may be crystallised on cooling.

REDUCTION OF METALLIC OXIDES.

Copper.

71. Fill a porcelain boat with copper oxide. Place it in a piece of combustion tube with a stopper at each end carrying a delivery tube. Pass through the tube a current of hydrogen, taking care to test the gas before heating the tube. The heated oxide is rapidly reduced. Allow to cool in the current of hydrogen.

$$CuO + H_2 = Cu + H_2O.$$

[1] Gattermann, *Practical Methods of Organic Chemistry.*

Coal gas may be substituted for hydrogen, and by finding the weight of oxide used and of copper produced, and repeating the experiment with cuprous oxide, the results obtained may be used to verify the law of multiple proportions.

The law of constant proportions may also be verified by finding the weight of oxide produced when a known weight of reduced copper is heated in air, and dissolving the same weight of copper in nitric acid, evaporating to dryness, decomposing the nitrate by heat and weighing the residue of copper oxide.

Lead.

72. The lead may be obtained as in the last method, or as follows. Heat 6 or 7 grams of an oxide of lead in a carbon crucible in a muffle furnace till reduced.

When cool the bead of lead may be taken out, cleaned from adhering particles of the crucible, and weighed. By repeating with other oxides of lead, the law of multiple proportions may be verified.

Manganese.

73. When certain metallic oxides are heated with aluminium powder, the metal is produced and aluminium oxide formed. The heat produced by the action is so great that it is only necessary to start the action at one point in the mixture. If sufficient material be used, the product will liquefy and a mass of the metal will be obtained.

Prepare about 80 grs. of trimanganese tetroxide by strongly heating the dioxide.

$$3MnO_2 = Mn_3O_4 + O_2.$$

Mix the product with the calculated quantity of aluminium powder and pack tightly in a fireclay crucible. To start the action cover with a thin layer of potassium permanganate and aluminium in equal parts, place a short piece of magnesium ribbon in the centre and light the magnesium. The crucible should be surrounded with sand and as soon as the action is started the lid should be placed on the crucible and more sand put round.

$$8Al + 3Mn_3O_4 = 4Al_2O_3 + 9Mn.$$

When cool break the crucible to obtain the mass of manganese.

Make a similar experiment with chromium sesquioxide.

A mixture of ferric oxide and aluminium powder, which is sold under the name of "Thermit" is used for the production of molten iron at a high temperature.

Sodium Bicarbonate.

$NaHCO_3$.

74. Dilute 250 c.cs. of ·880 ammonia with twice its volume of water and place it in a litre flask. Pass in a steady stream of carbon dioxide till absorption ceases. Keep the flask cool during the operation. If a precipitate forms, add water to dissolve it. Make a saturated solution of 200 grs. of common salt in water and add to it the solution of ammonium bicarbonate till no further precipitation is observed. Keep the solution cool during the addition. Filter, wash the precipitate with small amounts of cold water to remove the ammonium chloride, and dry in a steam oven.

$$NH_3 + H_2O + CO_2 = NH_4HCO_3.$$
$$NH_4HCO_3 + NaCl = NaHCO_3 + NH_4Cl.$$

Compare this method with the Solvay or Ammonia Soda process.

The solubility of sodium bicarbonate is 9·8 at 20°C., that of the normal carbonate being 21·4.

Sodium carbonate may be prepared from the bicarbonate by heating or by boiling the aqueous solution :

$$2NaHCO_3 = Na_2CO_3 + H_2O + CO_2.$$

Sodium Carbonate.

$Na_2CO_3 . 10H_2O$.

(Washing Soda.)

75. Heat 500 c.cs. of water to boiling in a beaker and add in small portions about 200 grs. of soda ash. If the solution is yellow add a small quantity of bleaching powder. Filter through a cloth filter, concentrate and allow to cool. Press the crystals between filter paper and dry in the air till efflorescence commences. Store in a well-stoppered bottle.

To obtain free from sulphates and chlorides commence with sodium bicarbonate. Place in a funnel plugged with cotton wool and wash repeatedly with small quantities of distilled water. Test the filtrate for chlorides and sulphates. When free from these, place the bicarbonate in a platinum dish and dry in the air oven. Heat strongly till the weight is constant. The product contains small traces of silica. Dissolve it in hot water and crystallise from the cold solution.

Sodium carbonate crystallises in large monosymmetric crystals containing 10 molecules of water of crystallisation. The crystals are efflorescent, forming $Na_2CO_3 . H_2O$. The student should notice the solubility curve for the crystals.

Sodium Hydroxide.

NaOH.

76. In a large beaker place some water and boil. Add in portions 50 grs. of sodium carbonate (anhydrous) or 100 grs. washing soda and when dissolved add about 50 grs. of slaked lime. Boil, filter 2 or 3 drops and test with acid. If no effervescence occurs the action is complete. Allow to settle, decant the clear liquid and evaporate.

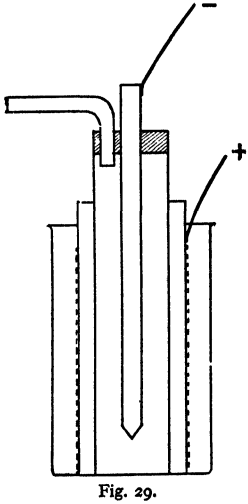

Fig. 29.

$$Na_2CO_3 + Ca(OH)_2 = CaCO_3 + 2NaOH.$$

Sodium Hydroxide.

(By Electrolysis.)

77. Take a large beaker and place in it a large porous cell round which is placed a piece of wire gauze to act as a cathode. Inside the porous cell place a cylindrical lamp chimney fitted with a 2-holed rubber stopper. Through one hole place a carbon rod to act as anode and through the other an exit tube for the chlorine produced. Coat the rubber stopper with paraffin

Pour into the porous pot and beaker a saturated solution of common salt in water. The porous pot prevents the chlorine produced during electrolysis from acting on the sodium hydroxide. The most suitable current will depend upon the dimensions of the different portions of the apparatus, and the student should note carefully the nature of the current used. All phenomena should be entered in the notes, and should include the sp. gr. of the electrolytes before and after electrolysis, and of the sodium hydroxide obtained. The chlorine may be absorbed by slaked lime to form bleaching powder.

Sodium Sulphite.

$Na_2SO_3 . 7H_2O.$

78. Dissolve 30 grams crystallised sodium carbonate in 100 c.cs. of water, and divide the solution into two equal parts. Saturate one half with sulphur dioxide. Carbon dioxide is expelled and sodium bisulphite produced.

$$Na_2CO_3 + 2SO_2 + H_2O = 2NaHSO_3 + CO_2.$$

Now add the other half of the sodium carbonate solution. More carbon dioxide gas is evolved, and sodium sulphite formed.

$$2NaHSO_3 + Na_2CO_3 = 2Na_2SO_3 + CO_2 + H_2O.$$

The normal sulphite crystallises from this solution in transparent monoclinic prisms. The crystals are efflorescent, and lose the whole of the water of crystallisation at 150° C. The solution has an alkaline reaction.

Sodium Hydrogen Sulphite.

$NaHSO_3.$

79. This salt may be obtained from the above solution saturated with sulphur dioxide in the cold. It can be crystallised by allowing the solution to evaporate slowly in the cold, and is precipitated from the aqueous solution in the form of a white powder, by the addition of alcohol. It has an acid reaction, smells of sulphur dioxide, and liberates the gas on heating or on boiling the aqueous solution, leaving the normal sulphite.

Sodium Thiosulphate.

$Na_2S_2O_3 . 5H_2O.$

80. Prepare sodium sulphite as above from 25 grams sodium carbonate, or dissolve 25 grs. sodium sulphite in 100 c.cs. water, and add 5 grs. flowers of sulphur. Boil gently for about half an hour until the alkaline reaction of the sulphite has disappeared, and filter. Sodium thiosulphate is produced by the union of sulphur with the sulphite,

$$Na_2SO_3 + S = Na_2S_2O_3,$$

and crystallises from the filtrate in large transparent monoclinic prisms, containing five molecules of water.

It is also prepared by passing sulphur dioxide into a solution of sodium sulphide.

The salt is unchanged by exposure to air, and the aqueous solution is neutral. The crystals melt in their own water at 45°C., and lose all the water at 215°C. On further heating the substance decomposes with liberation of sulphur. When the solution is acidified with hydrochloric acid, no immediate change is apparent, but the unstable thiosulphuric acid is liberated, and gradually decomposes, liberating sulphur and sulphur dioxide.

$$H_2S_2O_3 = H_2O + SO_2 + S.$$

Iodine solution is at once decolourised, and thiosulphate is largely used for the estimation of free iodine and as an antichlor in the bleaching of paper pulp, calico, etc.

$$2Na_2S_2O_3 + I_2 = 2NaI + \underset{\text{Sodium tetrathionate.}}{Na_2S_4O_6}.$$

The solution of thiosulphate also dissolves silver halides, and is employed as a fixing agent in photography, usually under the erroneous name of "hyposulphite."

$$Na_2S_2O_3 + AgCl = NaCl + AgNaS_2O_3.$$

Barium Dithionate.

$BaS_2O_6 . 2H_2O.$

81. 20 grams of finely-powdered manganese dioxide are suspended in water and sulphur dioxide is passed in, with

frequent shaking, until no more of the oxide will dissolve. The solution contains manganese dithionate and a small quantity of sulphate.

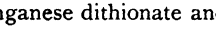

$$MnO_2 + 2SO_2 = MnS_2O_6.$$

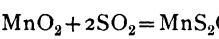

$$MnO_2 + MnS_2O_6 = 2MnSO_4.$$

The manganese salt may be obtained in easily soluble rhombohedral crystals, with three molecules of water, $MnS_2O_6 . 3H_2O$. It is better to prepare the barium salt, which can be obtained quite free from sulphate by adding a solution of barium hydroxide as long as a precipitate forms.

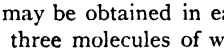

$$MnSO_4 + Ba(OH)_2 = BaSO_4 + Mn(OH)_2.$$

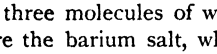

$$MnS_2O_6 + Ba(OH)_2 = BaS_2O_6 + Mn(OH)_2.$$

Warm gently and filter off the precipitated barium sulphate and manganese hydroxide. Barium dithionate may then be crystallised from the filtrate by slow evaporation in a warm place. It forms colourless, transparent rhombic prisms.

On heating dithionates in a dry tube, or on boiling the aqueous solution for some time, especially in presence of a little hydrochloric acid, they are all decomposed into sulphur dioxide and the sulphate.

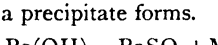

$$BaS_2O_6 = BaSO_4 + SO_2.$$

Note for student. Devise a scheme to distinguish between sulphites, bisulphites, thiosulphates, sulphates, and dithionates.

Sulphuric Acid.

H_2SO_4.

82. The manufacture of sulphuric acid by the chamber process may be illustrated with the aid of the following apparatus: A large dry flask or bottle of 2-3 litres capacity is used as the reaction chamber, and into this are passed from separate generators sulphur dioxide, vapour of nitric acid, air, and steam. An exit tube must also be provided for the excess of gas. Fit up the apparatus in the fume chamber, and commence by introducing gradually into the dry flask sulphur dioxide from the generator (par. **36**), in which strong sulphuric acid is dropped into sodium bisulphite solution, and nitric acid from a small

flask containing a mixture of sodium nitrate and strong sulphuric acid. The nitric acid is reduced by sulphur dioxide, forming red fumes of nitrogen peroxide, while sulphuric acid is simultaneously formed.

$$SO_2 + 2HNO_3 = H_2SO_4 + 2NO_2.$$

After a short time also a white crystalline deposit appears on the inside of the flask. This is chamber crystal, or nitrosulphonic acid, and is formed by the action of nitric acid on sulphur dioxide in the absence of water.

$$SO_2 + HNO_3 = O_2S{<}^{OH.}_{O.NO.}$$

This deposit is at once decomposed on the admission of steam, forming sulphuric and nitrous acids,

$$SO_2 . OH . NO_2 + H_2O = H_2SO_4 + HNO_2,$$

the latter decomposing with effervescence into water, nitric oxide and peroxide.

$$2HNO_2 = H_2O + NO + NO_2.$$

The nitrogen peroxide produced above also plays an important part in the oxidation of sulphur dioxide, being reduced to nitric oxide,

$$SO_2 + NO_2 + H_2O = H_2SO_4 + NO.$$

and this nitric oxide again combines with oxygen from the air introduced, thus acting as a "carrier" of oxygen to the sulphur dioxide. For this reason a small quantity only of nitric acid is required, provided the oxides of nitrogen are retained in the chamber. Hence the use of the Glover and Gay Lussac towers in the technical process.

When the above operations have been continued for about an hour, air being introduced from time to time from the gasholder, a considerable quantity of dilute sulphuric acid will have collected. The liquid will be strongly acid, and will decompose sodium carbonate and dissolve zinc or iron, liberating hydrogen. It will also give a white precipitate with barium chloride, insoluble in acids.

Evaporate one-fourth or less of the liquid in the fume cupboard, until white fumes begin to be evolved. The residue is now strong sulphuric acid, a heavy oily liquid. After cooling,

pour into a little cold water in a test tube and note the evolution of heat. It may now be added to the main portion of the liquid, the whole boiled to expel oxides of nitrogen, and then converted into the following salts.

Magnesium Sulphate.

$MgSO_4 . 7H_2O$.

(Epsom Salt.)

83. Neutralise one half of the dilute sulphuric acid obtained above with magnesium carbonate, heat nearly to boiling and filter at once. Magnesium sulphate crystallises from the filtrate in four-sided rhombic prisms containing seven molecules of water of crystallisation. When heated, the crystals melt in this water, and lose six molecules at 150°, the seventh at 200°. The crystals are isomorphous with the corresponding sulphates of zinc, iron, nickel, etc.

Epsom salt is used in medicine as a purgative, and is also employed in dressing and weighting cotton goods, and as a mordant in dyeing.

Copper Sulphate.

$CuSO_4 . 5H_2O$.

(Blue Vitriol.)

84. The other half of the dilute sulphuric acid solution is neutralised by boiling with copper oxide, or by adding copper carbonate. The blue filtered solution deposits copper sulphate on cooling, in transparent, blue triclinic crystals containing five molecules of water. Four of these are lost at 100°, the fifth at 220-230°. Copper sulphate is used as a mordant in calico-printing, and in dyeing, in making certain pigments, as Scheele's green and emerald green, and in the electrometallurgy of copper.

Purification of Copper Sulphate.

85. The commercial copper sulphate contains some iron. Dissolve 200 grams in 300 c.cs. of hot water, add 12 grams of lead peroxide and boil for an hour, keeping a constant bulk of liquid by addition of water. Add barium carbonate and stir well, keeping the solution warm.

Test a few c.cs. as follows. Filter, add ammonium hydrate in excess and filter again. Wash the filter paper, and if a brown precipitate is seen iron is present.

Oxidise the original substance further with lead peroxide, add more barium carbonate if necessary and again test. If free from iron filter the whole of the liquid, concentrate and crystallise.

Zinc Sulphate.

$ZnSO_4 . 7H_2O$.

(White Vitriol.)

86. The solution from the hydrogen generator may be used, excess of zinc being added to render the solution as nearly neutral as possible and to prevent the solution of arsenic and lead which may be present as impurities. Filter the supernatant liquid through an asbestos filter. Oxidise any iron present by passing chlorine through the solution. The iron should not be precipitated with ammonium hydrate owing to the formation of ammonium sulphate which will crystallise with the zinc sulphate. It may be precipitated by boiling with a small quantity of zinc carbonate (which may be prepared by precipitating a small portion of the solution with sodium carbonate, filtering and washing the precipitate), stirring during the heating.

Test the clear liquid with potassium sulphocyanide for iron, and if free, filter through asbestos and evaporate the filtrate till saturated. Allow the solution to crystallise. Press the crystals between filter paper and dry at a low temperature.

Zinc sulphate crystallises in long rhombic prisms which are efflorescent. At 100° C. it parts with 6 molecules of water of crystallisation, and with the last molecule at 300° C. It decomposes on heating strongly, forming zinc oxide. It is used in medicine and in dyeing and printing.

Potassium Dichromate.

$K_2Cr_2O_7$.

87. Take 30 grams of finely powdered chromite, or chromium sesquioxide, Cr_2O_3, and mix well by grinding in a mortar with 30 grams powdered potassium nitrate and 20 grams dry potassium carbonate. Place the mixture in a large earthenware crucible

and heat to redness in a muffle furnace for several hours. Allow to cool and extract the yellow mass with boiling water. Filter from oxide of iron and concentrate the solution.

$$2Cr_2O_3 . FeO + 4K_2O + 7O = 4K_2CrO_4 + Fe_2O_3.$$

Add sulphuric acid till the solution is strongly acid. The chromate is converted into dichromate, which crystallises readily. Filter the crystals at the pump, using a plug of asbestos or glass wool instead of paper, wash with a little cold water, and concentrate the filtrate. The later separations are liable to contain potassium sulphate. Recrystallise the dichromate from hot water. It crystallises in orange-red triclinic prisms, without water of crystallisation. These melt without decomposition below a red heat, and decompose at higher temperature into oxygen, chromium sesquioxide and the normal potassium chromate.

Potassium dichromate is largely used in dyeing and calico-printing, as an oxidising agent, and in the preparation of other chromium compounds. The solution has an acid reaction, and is poisonous.

Potassium Chromate.

K_2CrO_4.

88. Dissolve 30 grams potassium dichromate in 100 c.cs. water, and add slowly to the warm solution 14 grams dry potassium carbonate. The normal chromate is produced:

$$K_2Cr_2O_7 + K_2CO_3 = 2K_2CrO_4 + CO_2.$$

Boil the liquid to expel carbon dioxide, filter and evaporate. The salt crystallises in yellow rhombic pyramids and is very soluble in water, but insoluble in alcohol. The solution has a strong yellow colour, and an alkaline reaction. When heated the salt becomes darker in colour and melts at a high temperature without decomposition.

Chromium Trioxide.

CrO_3.

(Chromic Anhydride.)

89. Dissolve 60 grams of potassium dichromate in 100 c.cs. water, and add 85 c.cs. strong sulphuric acid. Allow the

mixture to stand overnight in a cool place, when potassium bisulphate will crystallise out. Decant the liquid, heat the mother liquor to 80-90° C., and add 30 c.cs. strong sulphuric acid. If a precipitate of chromium trioxide separates, add water till it just redissolves. Evaporate over steam until crystals begin to form in the liquid, and set aside for a day. Decant the liquor and evaporate to obtain a further crop. Drain the crystals on a funnel loosely plugged with glass wool, using the pump, and wash twice with small quantities of strong nitric acid to remove sulphuric acid and sulphates. Place in a porcelain dish and dry by heating very gently on a sand-bath.

Chromium trioxide crystallises in long rhombic prisms of a deep crimson colour. It melts unchanged at 195°, forming a deep-red liquid, and at 250° decomposes into oxygen and the sesquioxide. It is a powerful oxidising agent.

Lead Chromate.

$PbCrO_4$.

(Chrome Yellow.)

90. Dissolve 100 grs. of lead acetate or lead nitrate in water. Calculate the necessary quantity of potassium chromate or of sodium chromate and dissolve in water. Filter the solutions, mix the clear liquids and stir well. Wash the precipitate well by decantation, testing the supernatant liquid for lead and chromate. When free from these pour off the liquid and filter through a fluted filter or cloth filter. Press out as much water as possible, break up and dry in the steam oven.

$$Pb(NO_3)_2 + K_2CrO_4 = PbCrO_4 + 2KNO_3.$$

The precipitate is chrome yellow and may be obtained in lighter shades by replacing a portion of the potassium chromate with sodium sulphate, when lead sulphate will be precipitated with the chromate.

Basic Lead Chromate.

(Chrome Red.)

Take a portion of the yellow precipitate before drying and boil with dilute caustic soda solution. The yellow colour will

change to orange or red owing to the formation of basic chromate of lead.

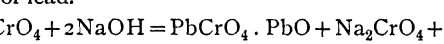

$$2PbCrO_4 + 2NaOH = PbCrO_4 . PbO + Na_2CrO_4 + H_2O.$$

These chromates are used as pigments.

Potassium Permanganate.

$KMnO_4$.

91. Place 70 grams caustic potash and 30 grams potassium chlorate in a deep iron sand tray, add 50 c.cs. water and warm until all is dissolved. Stir in 60 grams finely-powdered pyrolusite, and evaporate with constant stirring until the paste solidifies. Cover with another dish and heat to dull redness until the mass is quite hard and dry. Allow to cool, break up and powder the dark green or brown mass of potassium manganate, and boil in 1½ litres of water for an hour, while passing a stream of carbon dioxide gas. A heavy precipitate of manganese dioxide is formed. Continue this until the liquid is violet in colour. The manganate is now changed to permanganate.

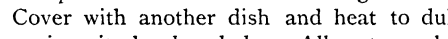

$$3MnO_2 + KClO_3 + 6KOH = 3K_2MnO_4 + KCl + 3H_2O.$$

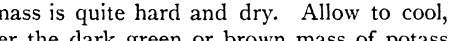

$$3K_2MnO_4 + 2CO_2 = K_2Mn_2O_8 + 2K_2CO_3 + MnO_2.$$

Allow the precipitate to settle, decant through a glass-wool filter, wash the precipitate twice with boiling water, and concentrate the combined filtrates. Allow to cool in a covered dish and avoid all contact with dust, organic matter, or reducing gases.

Potassium permanganate crystallises in dark violet rhombic prisms, with a green metallic lustre. The crystals are isomorphous with potassium perchlorate. Heated alone, they decompose into oxygen, manganese dioxide, and potassium manganate which is also further decomposed. The substance is largely used as an oxidising agent in the laboratory, and as a disinfectant.

Ammonium Nitrate.

NH_4NO_3.

92. In a 6-inch porcelain dish place 100 c.cs. of strong nitric acid and dilute with twice its volume of water. Add ammonium

hydrate (1 pt. of ·880 ammonia to 2 pts. of water) till the solution after stirring smells slightly of ammonia. Evaporate the liquid till a portion taken on the end of a glass rod rapidly solidifies. Allow to cool, and when solid, warm the dish to loosen the substance, and remove it from the dish. Break up into small pieces and use for the preparation of nitrous oxide.

If, during the neutralisation, a brown sediment is produced (probably traces of iron and tarry matter from the ammonia), allow to settle and filter.

To obtain crystals, evaporate the solution till saturated and allow to cool. Dry the crystals between filter papers.

$$NH_3 + HNO_3 = NH_4NO_3.$$

Sodium Nitrite.

$NaNO_2$.

93. Place 20 grs. of sodium nitrate in a tin dish and melt over a bunsen flame. Add 60 grs. of lead parings and continue heating and stirring till nearly all the lead is converted to litharge. Allow to cool, lixiviate and allow the clear liquid to crystallise.

$$NaNO_3 + Pb = NaNO_2 + PbO.$$

Sodium nitrite crystallises in deliquescent prisms and is largely used in the preparation of dye stuffs, and in dyeing.

Estimate the nitrite by potassium permanganate (see par. **257**).

Lead Nitrate.

$Pb(NO_3)_2$.

94. Wash the residue (litharge) obtained in the last experiment with hot water. Place it in an evaporating dish and add water, stir and add nitric acid in small portions till all the litharge is dissolved, keeping the solution hot during the experiment, and the bulk of liquid constant by addition of water. Evaporate to dryness on the water-bath. Dissolve in water, filter, add a few c.cs. of nitric acid, evaporate till concentrated and allow to crystallise.

$$PbO + 2HNO_3 = Pb(NO_3)_2 + H_2O.$$

Lead nitrate crystallises in regular octahedra, and has a solubility of 50 at ordinary temperatures.

Hydroxylamine Sulphate.

$(NH_2OH)_2 . H_2SO_4$.[1]

95. Dissolve 75 grams sodium nitrite and 140 grams crystallised sodium carbonate in as little ice water as possible, and pass in sulphur dioxide until the solution is just acid, stirring well and keeping the liquid at 2-3° below zero by immersion in ice and brine. The nitrite is completely converted at this temperature into sodium oximidosulphonate.

$$NaNO_2 + Na_2CO_3 + 3SO_2 + H_2O$$
$$= HO . N(SO_3Na)_2 + NaHSO_3 + CO_2.$$

Add a few drops of sulphuric acid; the temperature rises, owing to hydrolysis of the oximidosulphonate into oxamidosulphonate.

$$HO . N(SO_3Na)_2 + H_2O = HO . NH(SO_3Na) + NaHSO_4.$$

Heat slowly to 90°, and keep the solution at 90-95° for two days, to complete the hydrolysis into hydroxylamine sulphate.

$$HO . NH(SO_3Na) + H_2O = NH_2 . OH + NaHSO_4.$$

The liquid must not be boiled, or much of the hydroxylamine will be destroyed. To ascertain whether the change is complete, add excess of barium chloride to a small portion of the liquid, filter, and boil the filtrate with a crystal of potassium chlorate, to convert any sulphonate into sulphate. If no further precipitate is obtained, the hydrolysis is complete.

Now neutralise the solution with sodium carbonate, using methyl orange as indicator, and evaporate till the liquid weighs 790-820 grams. Cool to 0° or − 5°, when nearly all the sodium sulphate will crystallise out. Filter, wash the crushed crystals with a little ice-water, and evaporate until the liquor, on cooling to the room temperature, gives a large quantity of hydroxylamine sulphate. Evaporate the mother liquor carefully, separate sodium sulphate as before, and then obtain more hydroxylamine sulphate. Purify the latter by recrystallisation. Yield of crude hydroxylamine sulphate, about 60 grams.

The salt forms large, non-deliquescent crystals, soluble in three-quarters of its weight of water at 20° C. The free base is

[1] Divers and Haga, *Trans. Chem. Soc.* (1896), 1665.

alkaline in reaction, and is a strong reducing agent, precipitating gold and mercury from their solutions, and cuprous oxide from cupric salts.

Cuprammonium Sulphate.

$$CuSO_4 . 4NH_3 . H_2O.$$

96. When ammonia is added to a solution of copper sulphate, a pale blue basic sulphate is first precipitated, which dissolves in excess of ammonia to form a dark blue solution, containing the above salt. To obtain this in crystalline form, prepare a concentrated solution by adding a slight excess of 0·880 ammonia to a saturated solution of copper sulphate. When the solution is clear, cover it with an equal bulk of alcohol, added carefully from a pipette or tap-funnel. The salt is deposited in long, thin, blue rhombic prisms, which on exposure to air lose ammonia, and change into ammonium sulphate and basic copper sulphate. When heated gently to 150°, the crystals decompose to an apple green powder of the composition $CuSO_4 . 2NH_3$.

The blue solution contains a complex cupri-ammonium ion, from which the copper may be precipitated by sulphuretted hydrogen, but not by caustic alkali.

Antimony Trichloride.

$$SbCl_3.$$

97. Place 50 c.cs. of concentrated hydrochloric acid in a porcelain dish and add in small portions 30 grs. of antimony trioxide, stirring during the addition. Heat gently and then boil till excess of acid is driven off and a drop of the liquid solidifies on cooling. Transfer to a retort fitted with a thermometer, and distil. When the temperature reaches 200° C. collect the antimony trichloride in a dry receiver.

$$Sb_2O_3 + 6HCl = 2SbCl_3 + 3H_2O.$$

Antimony trichloride is a deliquescent white crystalline substance, melting at 72° and boiling at 223°. It decomposes in water, but dissolves in alcohol unchanged. It is known as "butter of antimony." It may be crystallised from carbon disulphide.

Silicic Acid and Pure Silica.

98. In a dry half litre flask fitted with thistle funnel and delivery tube place a mixture of 20 grs. of fine sand and 25 grs. of powdered fluor spar. Allow the delivery tube to dip just below the surface of mercury (about 1 in. deep) contained in a gas jar. Have the delivery tube perfectly dry. Pour water (6 in. deep) on the surface of the mercury. Down the thistle funnel pour strong sulphuric acid and shake the flask to moisten the whole mass. (If any of the mixture at the bottom of the flask remains dry, the flask will probably crack on heating.) Heat the flask on a sand-bath. Silicon tetrafluoride is given off, and bubbling through the mercury is decomposed by the water, forming a precipitate of silicic acid and leaving in solution hydrofluosilicic acid. Filter, dry the precipitate and heat strongly. Pure silica is left. The filtrate may be used for the preparation of barium fluosilicate.

$$2CaF_2 + 2H_2SO_4 = 2CaSO_4 + 4HF,$$
$$4HF + SiO_2 = SiF_4 + 2H_2O,$$
$$3SiF_4 + 4H_2O = H_4SiO_4 + 2H_2SiF_6,$$
$$H_4SiO_4 = 2H_2O + SiO_2.$$

Ammonium Sulphide.

$(NH_4)_2S$.

99. Take 50 c.cs. of ·880 ammonia and dilute to 200 c.cs. Divide into two equal parts. Saturate one with sulphuretted hydrogen and add it to the other.

$$NH_4OH + H_2S = NH_4SH + H_2O,$$
$$NH_4SH + NH_4OH = (NH_4)_2S + H_2O.$$

Ammonium sulphide is used as a reagent, but for this purpose it is generally best prepared by adding ammonium hydrate to the solution to be tested and passing a few bubbles of hydrogen sulphide through the mixture.

Ammonium sulphide decomposes on standing, liberating ammonia and sulphur, the latter dissolving in undecomposed ammonium sulphide, forming a yellow solution.

Yellow Ammonium Sulphide.

$(NH_4)_2S_{1+x}$.

100. Pour the colourless solution of ammonium sulphide, as prepared above, over sulphur standing in a filter paper placed in a funnel. The sulphur dissolves, forming polysulphides of ammonium.

$$(NH_4)_2S + xS = (NH_4)_2S_{1+x}.$$

The polysulphides are decomposed by acids and sulphur is precipitated ;

$$(NH_4)_2S_{1+x} + 2HCl = 2NH_4Cl + H_2S + xS.$$

Yellow ammonium sulphide is used as a solvent to remove the sulphides of arsenic, antimony and tin from those of the other metals of the copper group.

Cadmium Sulphide.

CdS.

(Cadmium Yellow.)

101. Dissolve 10 grs. of cadmium sulphate or chloride in water and pass sulphuretted hydrogen through the solution. Wash the precipitate well and dry in the steam oven.

$$CdSO_4 + H_2S = CdS + H_2SO_4.$$

Cadmium sulphide has a pure yellow colour and is not precipitated in strongly acid solutions. Owing to the liberation of acid during precipitation a further precipitate may be obtained on dilution of the filtrate.

Cadmium sulphide is used as a yellow pigment (cadmium yellow). The colour is permanent, unlike that of chrome yellow (lead chromate) which is blackened by sulphuretted hydrogen. The colour becomes deeper, approaching orange, as the strength of the acid is increased in the solution in which the sulphide is precipitated.

Phosphoric Acid.

H_3PO_4.

102. Place 10 grams of red phosphorus in a porcelain dish, cover with water and add concentrated nitric acid of equal bulk. Place in the fume cupboard and warm gently. Copious red

fumes will be evolved. When the action moderates add nitric acid, if necessary, in small quantities till all oxidation ceases. Heat to drive off excess of nitric acid, dilute the syrupy liquid with water, filter and evaporate till the temperature reaches 200° C. About 25 grs. of syrup of sp. gr. 1·85 will be obtained.

Sodium Phosphates.

103. Phosphoric acid is tribasic, and forms three distinct classes of salts, which may be obtained as follows.

DISODIUM HYDROGEN PHOSPHATE. $Na_2HPO_4.12H_2O$.

Take some syrupy phosphoric acid, dilute with water and divide into three equal parts.

To one part add sodium hydrate solution till a drop taken on the end of a glass rod is just alkaline to litmus. The solution now contains disodium hydrogen phosphate. Crystallise.

The amount of sodium hydrate solution required for neutralisation should be noted.

$$H_3PO_4 + 2NaOH = Na_2HPO_4 + 2H_2O.$$

MONOSODIUM HYDROGEN PHOSPHATE. $NaH_2PO_4.4H_2O$.

To a second part of the phosphoric acid solution add half the quantity of sodium hydrate solution used in the last preparation, and crystallise.

$$H_3PO_4 + NaOH = NaH_2PO_4 + H_2O.$$

TRISODIUM PHOSPHATE. $Na_3PO_4.12H_2O$.

To the third part add three times the quantity of sodium hydrate used in the last preparation, and crystallise the normal phosphate.

$$H_3PO_4 + 3NaOH = Na_3PO_4 + 3H_2O.$$

The disodium phosphate is the common phosphate of soda, and crystallises in large monoclinic prisms which contain 12 molecules of water of crystallisation and are efflorescent.

The monosodium phosphate forms large rhombic crystals, containing 4 molecules of water of crystallisation, and having an acid reaction.

The normal phosphate crystallises in thin six-sided prisms containing 12 molecules of water of crystallisation. Its solution in water is strongly alkaline.

When heated the first yields sodium pyrophosphate,

$$Na_2HPO_4 = Na_4P_2O_7 + H_2O,$$

and the second, at 204° sodium hydrogen pyrophosphate,

$$2NaH_2PO_4 = Na_2H_2P_2O_7 + H_2O.$$

At 240° this loses the remainder of its water, yielding sodium metaphosphate.

$$NaH_2PO_4 = NaPO_3 + H_2O.$$

Microcosmic Salt.

(Salt of Phosphorus), $Na(NH_4)HPO_4 . 4H_2O$.

104. Calculate molecular proportions of sodium phosphate crystals and ammonium chloride to make 100 grams of the mixture Dissolve the sodium phosphate by adding in portions to 100 c.cs. of boiling water in a flask which should be shaken during solution. Add the ammonium chloride, dissolve, filter if necessary and allow to crystallise. By fractional crystallisation free the substance from sodium chloride.

$$Na_2HPO_4 + NH_4Cl = Na(NH_4)HPO_4 + NaCl.$$

Microcosmic salt (sodium hydrogen ammonium phosphate) crystallises with 4 molecules of water. It is efflorescent and when heated leaves sodium metaphosphate. The fused metaphosphate unites with metallic oxides, forming orthophosphates, some of which are coloured, and is therefore used as a dry test for metals.

$$Na(NH_4)HPO_4 = NaPO_3 + NH_3 + H_2O,$$

$$NaPO_3 + CuO = \underset{\text{(blue bead)}}{CuNaPO_4}.$$

Silica is insoluble in a metaphosphate bead.

Arsenic Acid.

$AsO(OH)_3$.

105. In a half-litre retort place 50 grams arsenious oxide in small lumps, and 50 c.cs. strong nitric acid. Direct the retort neck upwards to act as a reflux condenser, and connect the end by means of a glass tube with a small flask immersed in ice water, in which the nitrous fumes may be condensed. Heat

the retort gently on a sand-bath until no more fumes are evolved. Pour off the liquid, evaporate to dryness and test the residue for arsenious acid. If present add aqua regia and again evaporate to dryness until free from arsenious acid. Dissolve in hot water and again evaporate to dryness to expel nitric acid. The residue can then be crystallised from a little hot water. It

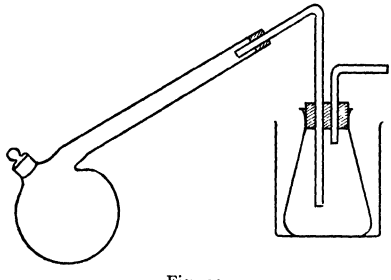

Fig. 30.

forms transparent crystals having the formula $2H_3AsO_4 . H_2O$. These melt at 100°, giving off the crystal water, and leaving a white crystalline powder of orthoarsenic acid, H_3AsO_4.

Examine the dark-blue liquid which has condensed in the small flask. It contains nitrogen trioxide and tetroxide. Pour it into cold water, and test the solution for nitrous and nitric acids (pars. **190** and **191**).

Sodium Arsenate.

$Na_2HAsO_4 . 12H_2O$.

106. (*a*) To the arsenic acid obtained in last experiment add a slight excess of sodium carbonate; filter, and evaporate the solution at a temperature not exceeding 18° C. The crystals obtained have the above composition, are isomorphous with sodium phosphate, $Na_2HPO_4 . 12H_2O$, and efflorescent. At 20° and higher temperatures the crystals contain only seven molecules of water, and are not efflorescent.

(*b*) Place 20 grams of white arsenic in a porcelain dish, add water, and sodium carbonate solution in slight excess. When all is dissolved add a solution of 15 grams sodium nitrate,

evaporate to dryness and ignite in a clay crucible. Dissolve the residue in water, filter and crystallise as above.

Sodium arsenate is readily soluble in water, and the solution has a feeble alkaline reaction. It is used in dyeing alizarines, and in calico-printing.

Silver Nitrate.

(From Silver Residues.)

107. Add strong hydrochloric acid to the residues, allow to settle, pour off the clear liquid, filter, wash well and dry. Mix the dry residue with four times its weight of fusion mixture together with half its weight of potassium nitrate and place in a fireclay crucible. Heat strongly in a furnace, pour on to an iron plate and allow to cool. Remove as much carbonate from the button as possible by scraping, and boil the silver with hydrochloric acid to dissolve any remaining carbonate.

Dissolve the silver in nitric acid diluted with half its volume of water. Evaporate to dryness to remove nitric acid, dissolve in distilled water, filter and allow to crystallise.

Silver nitrate forms large colourless rhombic plates which melt at 218° C. and resolidify on cooling to a white fibrous mass known as lunar caustic. Silver nitrate is used largely in analytical and photographic work, and is also employed in medicine and for marking inks.

Sodium Cobaltinitrite.[1]

$Na_3Co(NO_2)_6$.

108. Pure sodium nitrite should be employed for the preparation of this substance, which is used as a reagent for the detection of potassium (**211**).

Dissolve 150 grams of sodium nitrite in 150 c.cs. of hot water, and cool to 45°-50°. Add 50 grams of cobalt nitrate and stir or shake until all is dissolved. Now add 25 c.cs. glacial acetic acid, mix thoroughly by shaking, and allow to stand for half an hour. Filter if necessary from traces

[1] Cunningham and Perkin, *Trans. Chem. Soc.* (1909), 1568.

of yellow potassium cobaltinitrite, and then aspirate a rapid current of air through the liquid to remove oxides of nitrogen. Add 150 c.cs. alcohol (95 per cent.) and shake well at frequent intervals for about an hour. A bulky yellow precipitate of sodium cobaltinitrite is obtained, which is filtered on a Buchner funnel, washed with 60 per cent. alcohol, finally with 95 per cent., then dried on a porous plate.

The salt when dry is a pale orange-yellow crystalline powder, very soluble in water, but not in alcohol.

Potassium Cobaltinitrite, $K_3Co(NO_2)_6$, is obtained as a canary yellow precipitate by adding sodium cobaltinitrite to a solution of a potassium salt. Like the ammonium salt, it is very sparingly soluble in water.

Purification of Mercury.

109. Allow the mercury to fall in a succession of small drops from the end of a funnel through a long column of dilute nitric acid of spec. grav. 1·1 (15 per cent. HNO_3, made by mixing 1 part of strong acid with three of water). Syphon off the acid, wash the mercury several times with water, syphoning off the water, and then dry the mercury, first with blotting paper, finally on the steam pan.

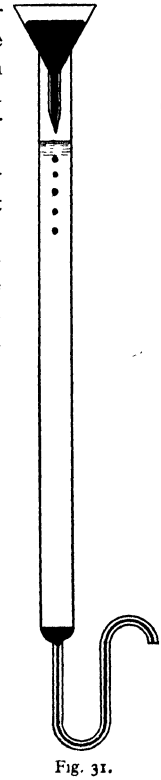

Fig. 31.

A mercury purification tube may also be used (Fig. 31). The bottom is first filled with pure dry mercury, nitric acid is introduced, and the stream of impure mercury started. The process is then automatic, the purified mercury syphoning over into a receiver, in which it may be dried by placing in the steam oven.

The best method for the purification of mercury is that of distillation, which may be carried out in a glass retort. Pure mercury boils at 357° C.

B. CARBON COMPOUNDS.

Methane.

(Marsh Gas), CH_4.

110. This gas may be obtained by heating anhydrous sodium acetate with caustic alkalies.

$$CH_3 . COONa + NaOH = CH_4 + Na_2CO_3.$$

Mix together 10 grs. of freshly-fused sodium acetate and 30 grs. of granulated soda-lime, which has been previously heated and allowed to cool in the desiccator. Place the mixture in a hard glass test-tube or flask, heat carefully, and collect the gas over water. About 2 litres of gas will be evolved.

Show that bromine water and potassium permanganate are not affected by the gas, by adding these reagents respectively to two jars of the gas and shaking well. The gas is therefore saturated. With a third jar show that lime-water is not affected; then burn the gas, noting the appearance of the flame, and show that carbon dioxide is produced.

$$CH_4 + 2O_2 = CO_2 + 2H_2O.$$

Potassium Ethyl Sulphate.

$C_2H_5 . K . SO_4$.

111. 60 c.cs. of alcohol and 25 c.cs. strong sulphuric acid are mixed carefully in a half-litre round flask. Much heat is developed, and ethyl hydrogen sulphate is formed.

$$C_2H_5OH + H_2SO_4 \rightleftarrows C_2H_5 . H . SO_4 + H_2O.$$

As this reaction is reversible, it is incomplete unless a large excess of either alcohol or sulphuric acid be used. As the removal of much sulphuric acid from the product would be troublesome, excess of alcohol is employed, the above quantity being twice that theoretically required for 25 c.cs. of acid. Heat the flask for 3 hours in a boiling water-bath under a reflux condenser. The mixture now contains much ethyl hydrogen sulphate and water, together with some free sulphuric acid and

alcohol. Cool the flask under the tap, and pour the liquid into cold water in a large flask or dish. Neutralise with chalk or barium carbonate. This precipitates insoluble calcium or barium sulphate, while the calcium or barium ethyl sulphate is left in solution. Filter and evaporate to crystallising point. Colourless crystals of the salt

$$(C_2H_5 . SO_4)_2Ca . 2H_2O \text{ or } (C_2H_5 . SO_4)_2Ba . 2H_2O$$

are obtained.

To prepare the potassium salt from these, dissolve in water and add carefully to this solution, or to the mother liquor, a dilute solution of potassium carbonate, until no further precipitate of calcium or barium carbonate is produced. On evaporating the filtered liquid colourless tables of the anhydrous potassium salt, $C_2H_5 . K . SO_4$, are obtained.

REACTIONS. 1. Heat a few crystals of the potassium salt in a dry test-tube. The salt melts and then decomposes, giving off ethylene gas, which can be ignited at the mouth of the test-tube, and leaving a residue of potassium bisulphate.

$$C_2H_5KSO_4 \rightarrow C_2H_4 + KHSO_4.$$

2. Dissolve a crystal of the potassium salt in water; add a little dilute hydrochloric acid and barium chloride. There is no precipitate. Boil for a few minutes. A white precipitate of barium sulphate is gradually formed, as ethyl sulphuric acid is hydrolysed by boiling water.

$$C_2H_5HSO_4 + H_2O \rightarrow C_2H_5OH + H_2SO_4.$$

Ethylene.

(Olefiant Gas), C_2H_4.

112. The most convenient method is the action of sulphuric acid on alcohol. When a mixture of these substances (**111**) in certain proportions is heated to about 140°, the sulphovinic acid first formed is decomposed with liberation of ethylene:

$$C_2H_5 . H . SO_4 \rightleftharpoons C_2H_4 + H_2SO_4.$$

The mixture, however, is liable to char, and it then evolves SO_2 and CO_2, which are troublesome.

Pure ethylene is most readily prepared by the action of syrupy phosphoric acid on alcohol, as described by Newth.[1]

Place 50-60 c.cs. of the acid in a 200 c.cs. distilling flask. Fit the flask with a cork carrying a thermometer and a dropping tube (Fig. 31A), the end of the latter being drawn out to a fine point reaching to the bottom of the flask. The bulb of the thermometer must be in the liquid, and may be protected by being fitted with a capsule made of platinum foil. Boil the acid until the temperature rises to 200° C., and then allow the alcohol to enter slowly. Keep the temperature between 200° and 220°. Pass the gas through a wash bottle, standing in ice water, to condense the small quantities of ether and alcohol which are mixed with it.

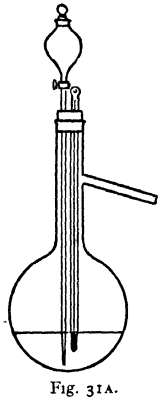

Fig. 31A.

The action of the phosphoric acid is similar to that of sulphuric acid, phosphovinic acid being produced.

Collect several jars of the gas and show that it decolourises bromine and potassium permanganate; the gas is unsaturated. Show that it has no action on lime-water, but forms carbon dioxide when burned. A mixture with air is explosive.

$$C_2H_4+3O_2=2CO_2+2H_2O.$$

Ethylene Dibromide.

$$C_2H_4Br_2.$$

113. This may be prepared by absorbing ethylene gas in bromine. After collecting the gas required in last experiment, allow the supply to pass into two glass wash-bottles, the first containing 20 c.cs. (60 grams) and the second 10 c.cs. of bromine, covered with water one inch deep. These wash-bottles should be kept cool in a trough of water. The bromine is gradually decolourised, forming a heavy colourless oil. Transfer this to a separating funnel, separate from the aqueous layer, and wash the oil with caustic soda

[1] *Trans. Chem. Soc.* 1901, 915.

until all free bromine and hydrobromic and sulphurous acids are removed. The oil should now be colourless. Transfer it to a small Erlenmeyer flask, add some anhydrous sodium sulphate to dry it, cork the flask and allow to stand over night. The oil may then be filtered into a small distilling flask and distilled. B. pt. 131°·5 C., sp. gr. 2·17 at 20° C.

Acetylene.

C_2H_2.

114. (*a*) From ethylene dibromide, by the action of alcoholic potash.

$$C_2H_4Br_2 + 2KOH = C_2H_2 + 2KBr + 2H_2O.$$

In a small flask place half a stick of caustic potash and 10 c.cs. alcohol and shake gently until the potash dissolves. Then add 2-3 c.cs. ethylene dibromide and warm gently, collecting the evolved acetylene over water. Examine its behaviour with permanganate and bromine water, and on burning.

(*b*) From calcium carbide by the action of water.

$$CaC_2 + 2H_2O = C_2H_2 + Ca(OH)_2.$$

Place some pieces of carbide in a small distilling flask fitted with a tap-funnel. From the latter allow water to drop slowly on to the carbide, when acetylene will be rapidly and continuously evolved. The gas may be collected over water, and its properties examined as above.

(*c*) From cuprous acetylide. See below.

Acetylene unites with bromine to form a dibromide and a tetrabromide : the latter is a colourless liquid of sp. gr. 2·96, and b. pt. 114° at 12 mm. It is prepared similarly to ethylene dibromide (par. **113**).

Cuprous Acetylide.

C_2Cu_2.

115. Dissolve a little cuprous chloride (par. **55**) contained in a small flask, in a slight excess of ammonium hydroxide,

and allow acetylene to enter. A dark red-brown precipitate is produced, consisting of cuprous acetylide.

$$Cu_2Cl_2 + C_2H_2 = C_2Cu_2 + 2HCl.$$

This precipitate is stable in water, but is very explosive when dry. Allow the precipitate to settle, and wash by decantation with cold water. Nearly fill the flask with dilute hydrochloric acid, attach a delivery tube, and warm gently. Acetylene is evolved.

$$C_2Cu_2 + 2HCl = C_2H_2 + Cu_2Cl_2.$$

Carbohydrates.

116. The group of carbohydrates includes the various forms of starch and of cellulose, which are insoluble in cold water, and a great variety of sugars, which are soluble. A few examples of these follow.

Starch.

$$(C_6H_{10}O_5)_n.$$

Starch is found as small granules in the cells of grain, potatoes, and legumes. The granules from different sources vary in appearance and also in size, the rice granules having a diameter of about ·005 mm. and those from potatoes ·07 mm.

Starch is insoluble in cold water, alcohol, and ether. When heated with water it forms a gelatinous liquid called starch paste. It is hydrolysed by boiling with acids, and gives glucose as a final product, but the commercial glucose usually contains maltose and dextrin, which are intermediate. Starch is not directly fermentable by yeast, but is converted by diastase, an enzyme present in the yeast, into maltose, which is further hydrolysed and fermented.

REACTIONS. 1. Heat a little starch in a dry tube. It chars, gives off water, acetic acid, etc., and leaves charcoal.

2. To a dilute solution of starch paste add a trace of free iodine. A blue colour is produced which disappears on warming to about 80° C., but returns on cooling.

Cane Sugar.

(Sucrose) $C_{12}H_{22}O_{11}$.

Cane sugar crystallises in anhydrous monoclinic prisms, M. pt. 160° C. Its solution in water is dextrorotatory. When boiled the solution is slowly hydrolysed, fructose (lævorotatory) and glucose (dextrorotatory) being produced.

$$C_{12}H_{22}O_{11}+H_2O=\underset{\text{Fructose.}}{C_6H_{12}O_6}+\underset{\text{Glucose.}}{C_6H_{12}O_6}.$$

Since the lævorotation of fructose is greater than the dextrorotation of glucose, the resulting mixture is lævorotatory, and is called "invert" sugar. The process is commonly called "inversion," this term being applied also to other cases of hydrolysis of bioses. The hydrolysis is accelerated by the presence of an acid, and the acceleration is greater the greater the degree of dissociation of the acid. It is attributed to the catalytic action of hydrogen ions (**199**).

Cane sugar is not directly fermentable by yeast, but the enzyme *invertase* present in yeast "inverts" it, and another enzyme, *zymase*, also present in the yeast-cell, induces alcoholic fermentation of both the hexose sugars. Cane sugar in a similar way can be fermented to give lactic and butyric acids (see lactic acid, **130**).

REACTIONS. 1. Heat a little sugar in a dry tube. It melts, turns yellow (caramel), chars, giving off water, acetic acid, acetone, etc., and leaving charcoal.

2. Heat a solution of sugar with a few drops of dilute sulphuric acid. The product, when neutralised, is readily fermentable by yeast, and reduces Fehling's solution (**164**). Cane sugar does not reduce Fehling's solution (see grape sugar, p. 79, 3).

3. Heat a little sugar with conc. sulphuric acid. Charring occurs, and carbon dioxide and sulphur dioxide are evolved.

4. Warm some sugar with conc. nitric acid. Copious reddish brown fumes are evolved, the sugar being oxidised to oxalic and other acids.

Milk Sugar.

(Lactose), $C_{12}H_{22}O_{11}+H_2O$.

Milk sugar occurs in the milk of all mammals, in quantities which vary in different species. It is obtained by concentrating the whey, the liquid remaining after separating the casein in cheese-making. It forms rhombic crystals, less soluble in water than cane sugar. The solution has a slightly sweet taste, and is dextrorotatory. It reduces Fehling's solution, though to a less degree than grape sugar (**282**). It is hydrolysed by certain enzymes (*lactase*) or by boiling with dilute acids, into glucose and galactose. Under the influence of certain ferments (**130**) it is converted into lactic acid, and the souring of milk is due to this fermentation.

Maltose.

$C_{12}H_{22}O_{11}$.

Maltose is the soluble sugar produced in germinating seeds by the action of *diastase* on starch, and is manufactured by the action of malt on starch. A similar change is effected by boiling the starch with dilute acids, and the maltose is further hydrolysed into glucose either by the continued action of the acid, or by the enzyme *maltase*. Maltose is usually present in commercial grape sugar, together with dextrin.

It crystallises in fine, colourless needles, easily soluble in water. The solution is dextrorotatory, reduces Fehling's solution, and is fermentable with yeast.

Grape Sugar.

(Glucose) from Starch.

Mix 20 grams of potato starch to a thin cream with cold water, and pour this into about a litre of boiling water contained in a large flask. Transfer about 100 c.cs. to each of two smaller flasks and allow to cool to 30-40° C. To the main portion add 5 c.cs. dilute sulphuric acid and boil

gently on a sand-bath until a few drops of the liquid, diluted with water in a test-tube, give no blue (starch) or brown (dextrins) colour with a drop of iodine solution. The starch is then completely hydrolysed into grape sugar.

$$(C_6H_{10}O_5)_x + xH_2O = xC_6H_{12}O_6.$$

Neutralise the sulphuric acid with chalk, filter and evaporate to dryness on the steam-bath.

To the two smaller portions of starch solution add respectively a little diastase and a little aqueous extract of crushed malt, which contains diastase. Trace the change into grape sugar as above, and then add to the filtered main portion and evaporate.

REACTIONS. 1. Heated in a dry tube, grape sugar melts readily (144-146°), loses water, then chars, evolving combustible gases with an odour of burnt sugar, and leaving a residue of carbon.

2. Heated with concentrated sulphuric acid, the mixture turns yellow, then brown, afterwards charring and evolving sulphur dioxide and carbon dioxide.

3. Grape sugar reduces Fehling's solution on warming, giving a red precipitate of cuprous oxide. (Distinction from cane sugar.) See the estimation of sugars (**282**).

4. Ammoniacal silver is also reduced, giving a silver mirror.

5. The fermentation test for sugars (**117**), may be applied in a test-tube or small flask, and the evolution of CO_2 demonstrated.

6. When a solution of glucose is mixed with a solution of phenylhydrazine acetate (or hydrochloride + sodium acetate), and warmed for a short time on the water-bath, a yellow crystalline ppt. of glucosazone is obtained :

$$\begin{aligned} &CH_2OH(CHOH)_4CHO + 3H_2N \,.\, NH \,.\, Ph \\ &\quad = CH_2OH(CHOH)_3 \,.\, \begin{array}{l} C : N \,.\, NH \,.\, Ph \\ | \\ CH : N \,.\, NH \,.\, Ph \end{array} \\ &\qquad + Ph \,.\, NH_2 + NH_3 + 2H_2O. \end{aligned}$$

This may be recrystallised from hot water, and melts at 205° C.

Alcohol.

(From Grape Sugar.)

117. 100 grams of commercial dextrose, or the substance prepared as in last experiment, is placed in a flask or bottle, dissolved in 750 c.cs. water, and 20 grams of yeast, mixed to a uniform cream with water, then added. Fermentation soon sets in, and proceeds most rapidly about 25° C. Attach a delivery tube to the flask and show that the gas evolved is carbon dioxide.

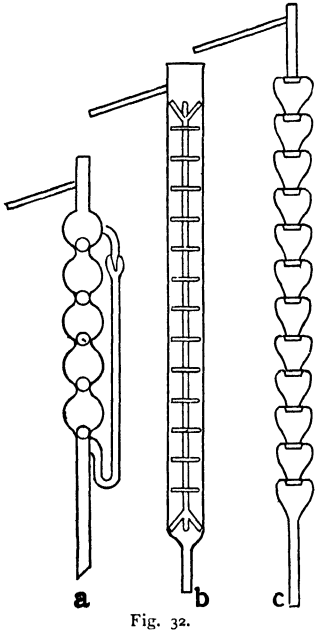

Fig. 32.

$$C_6H_{12}O_6 = 2C_2H_5 . OH + 2CO_2.$$

When the evolution of gas ceases (arrange to leave overnight), distil the filtered liquid, using a Young or Glinsky fractionating column. Collect in the first distillation up to 95° C. About 75 c.cs. of dilute alcohol will be obtained. Redistil this portion and collect up to 85° C. This will give about 50 c.cs. of alcohol, which may be further dehydrated by adding a few pieces of quick lime.

Alcohol is a colourless, pleasant smelling liquid, boiling at 78°·3 C. and of sp. gr. ·793 at 15° It mixes with water in all proportions, evolving heat.

REACTIONS. 1. Ethyl alcohol burns with a pale, slightly luminous flame, forming water and carbon dioxide.

2. On mixing with strong sulphuric acid, ethyl hydrogen sulphate is formed with evolution of heat. On warming, the mixture gives off inflammable vapours (ethylene, ether, etc.).

3. When warmed with strong sulphuric acid and sodium

acetate, ethyl acetate is formed, recognised by its pleasant fruity smell (compare par. **122**, 2).

$$C_2H_5 . OH + CH_3 . COOH = CH_3 . CO . OC_2H_5 + H_2O.$$

4. Acetaldehyde is produced on warming ethyl alcohol with potassium dichromate and dilute sulphuric acid, and is easily detected by its smell and its property of reducing ammoniacal silver.

$$C_2H_5 . OH + O = CH_3 . CHO + H_2O.$$

5. To an aqueous solution of alcohol add a little iodine solution and then sodium hydrate until the colour of the iodine is nearly destroyed. A pale yellow crystalline precipitate of iodoform is thrown down. Note the odour (distinction from methyl alcohol).

Ethyl Bromide.

C_2H_5Br.

118. The hydroxyl group in alcohols may be replaced by one atom of a halogen, in various ways. The most convenient method for the preparation of ethyl bromide is to distil a

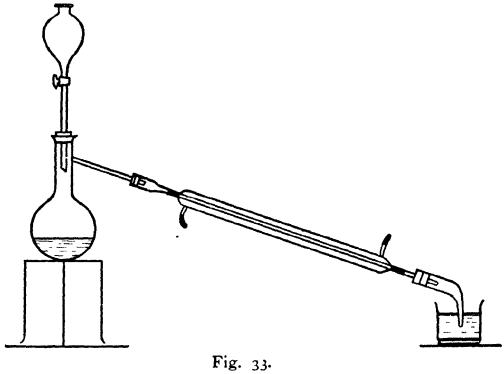

Fig. 33.

mixture of alcohol and potassium or sodium bromide with sulphuric acid.

$$C_2H_5OH + HBr = C_2H_5Br + H_2O.$$

In a half-litre distilling flask (Fig. 33) place 25 grs. (30 c.cs.)

alcohol and 50 grs. (28 c.cs.) strong sulphuric acid. Mix well and cool under the tap. Then add 50 grs. coarsely powdered potassium bromide, and warm gently on a sand-bath. Ethyl bromide distils and is condensed in a long condenser, on the end of which is placed an adapter, which dips just under the surface of water in the receiver. The oily drops of ethyl bromide sink to the bottom of this water, and when no more oil is obtained the operation is finished. Transfer the contents of the receiver to a separating funnel, wash the bromide with dilute sodium carbonate solution, then with water, and place in a dry, well-corked flask with a little anhydrous calcium chloride or sodium sulphate. After standing overnight, or for at least six hours, decant or filter into a small distilling flask and distil over a small naked flame, placing a few chips of porous plate in the liquid. Collect as ethyl bromide the fraction boiling at 35-40° C. Yield 40 grs.

Ethyl bromide is a colourless, ethereal smelling liquid, insoluble in water, but miscible with alcohol and ether in any proportion. B. pt. 38·8° C.; sp. gr. 1·47 at 15° C.

Ethyl Iodide. C_2H_5I.

Alkyl iodides are prepared by the interaction of alcohols with iodine and phosphorus. The usual method is to add the iodine slowly to a mixture of the alcohol with red phosphorus, the vessel meanwhile being frequently shaken and well cooled. This operation is very tedious, and a much better method is that devised by Walker.[1] The apparatus is shown in Fig. 34. 25 grams (30 c.cs.) of alcohol are placed in the round flask (250-300 c.cs. capacity) and 3 grams each of red and white phosphorus added, the latter being weighed under water in a small dish and then quickly dried with filter-paper. 50 grs. of iodine are placed in the funnel, the lower part of which is loosely plugged with glass wool. After attaching the condenser (reflux) the flask is heated in a water-bath. Alcohol vapour passes up the side tube, and the liquid returned from the condenser drops through the iodine, which is thus gradually introduced into the flask.

[1] Walker, *Trans. Chem. Soc.* (1892), 1971.

Towards the end, the reaction tends to proceed more rapidly, since the iodide is more volatile, and is also a better solvent for iodine, than the alcohol; care is therefore necessary, especially with large quantities.

When the reaction is completed, pour a little water down the condenser, to destroy phosphonium compounds, detach the condenser, and distil from a water-bath. Wash the distillate with dilute sodium hydroxide until colourless, then with water, dry with calcium chloride, and distil from a small distilling flask. Yield 90 per cent. theory.

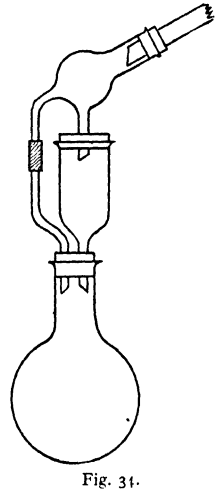

Fig. 34.

Ethyl iodide is a colourless, highly refractive liquid, of pleasant odour, insoluble in water, miscible with alcohol and ether; b pt. 72°, D_0 1·975.

Methyl Iodide, CH_3I, may be prepared in a similar manner. It is a colourless liquid of agreeable odour; b. pt. 43°, D_0 2·19.

The alkyl iodides are more readily decomposed than the corresponding bromides or chlorides, and soon acquire a brown colour owing to the separation of iodine. Walker claims that the keeping properties are much improved by the use of white phosphorus in the above method of preparation.

Ethane. C_2H_6. (From Ethyl Bromide or Iodide.)

119. Ethane is obtained by the complete reduction of its halogen derivatives.

$$C_2H_5Br + 2H = C_2H_6 + HBr.$$

In a 100 c.c. flask (Fig. 35), place a mixture of 20 grs. of zinc dust and 2-3 grs. powdered copper oxide. The calcium chloride tube is filled with coppered zinc, to remove vapour of ethyl bromide from the ethane: this is prepared by placing granulated zinc in dilute copper sulphate solution until it is coated with copper, then washing with water and finally with alcohol.

In the tap-funnel place a mixture of 10 c.cs. of ethyl bromide and 10 c.cs. alcohol, and allow this to drop slowly on to the zinc copper couple in the flask. Ethane is evolved and is collected

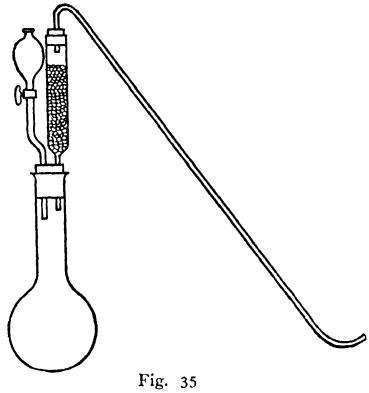

Fig. 35

over water. Examine its properties as for methane, and compare with those of the hydrocarbons already prepared.

By this method also methane may be prepared from methyl iodide,

$$CH_3I + CH_3OH + Zn = CH_4 + ZnI(OCH_3),$$

ethylene from ethylene dibromide,

$$C_2H_4Br_2 + Zn = C_2H_4 + ZnBr_2.$$

Oxidation of Alcohol.

120. Alcohol may be oxidised by the moderate action of oxidising agents, producing first acetaldehyde and then, by further oxidation, acetic acid.

$$C_2H_5OH + O = CH_3CHO + H_2O,$$
$$CH_3CHO + O = CH_3 . COOH.$$

Acetaldehyde.

$CH_3 . CHO.$

In a flask of 1·5-2 litres capacity (Fig. 36) place 140 grs. coarsely powdered poeassium dichromate and 550 c.cs. water.

The flask is placed on a sand-bath, and is fitted with a tap-funnel and connected with a good condenser and a receiver cooled in ice water. From the funnel introduce a cooled mixture of 148 grs. (190 c.cs.) alcohol and 184 grs. (100 c.cs.) strong sulphuric acid. The dichromate is reduced, as shown by the darkening of colour, and sufficient heat is evolved to cause the aldehyde to distil. When the first reaction subsides, heat the liquid and continue the distillation until all aldehyde has passed over; no smell of aldehyde should then be detected on opening

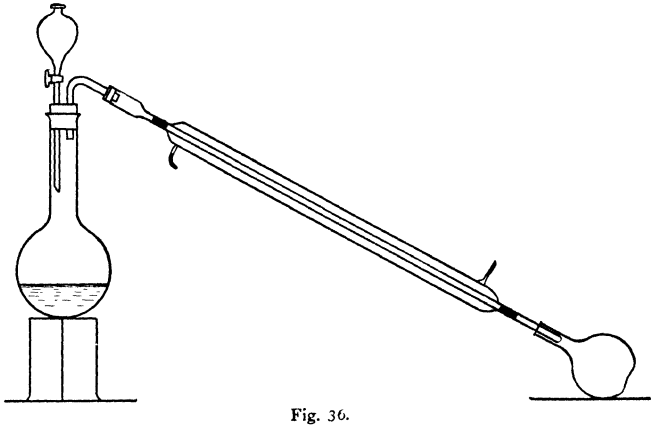

Fig. 36.

the flask, and the distillate should occupy 180-190 c.cs. The residue in the flask may be used to obtain chrome alum (**23**).

This distillate is a mixture of aldehyde, alcohol and water, and may be tested for aldehyde as follows:

REACTIONS. 1. Warm with ammoniacal silver solution in a test-tube placed in a beaker of hot water. A mirror of metallic silver is produced.

$$C_2H_4O + Ag_2O = 2Ag + C_2H_4O_2 \text{ (acetic acid).}$$

2. Apply the iodoform test (par. **117**, 5). A yellow precipitate of iodoform is produced.

3. Add a few drops to a small quantity of a saturated solution

of sodium bisulphite and shake well. A white, crystalline addition compound, $CH_3CH . OH . SO_3Na$, separates on standing.

Aldehyde Ammonia.

$$CH_3 . CH<^{OH}_{NH_2}.$$

The aldehyde obtained above may be purified by conversion into aldehyde ammonia.

$$CH_3CHO + NH_3 = CH_3 . CH<^{OH}_{NH_2}.$$

To the flask containing the impure aldehyde connect, by means of an adapter or by inclining the flask, a reflux condenser

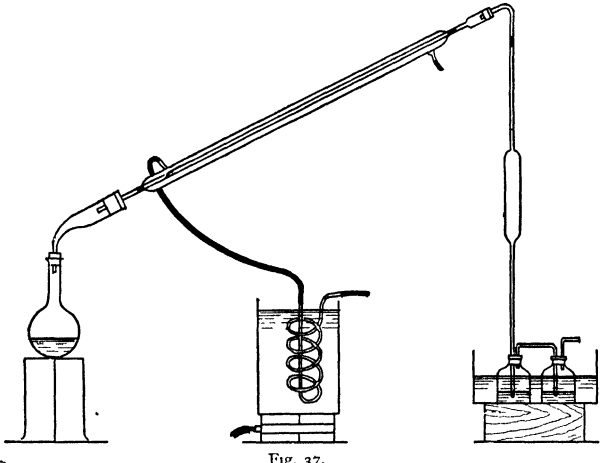

Fig. 37.

(Fig. 37), the upper end of which is connected by a glass tube with a 100 c.c. pipette, which passes nearly to the bottom of the first of two small wash bottles connected in series. These last contain each about 25 c.cs. of ether, and are kept cool by standing in ice water. Through the condenser a stream of water at 30-40° C. flows. Place a few pieces of broken pot in the flask, and boil the liquid gently until all aldehyde has passed

over into the ether. The water and alcohol are condensed and returned to the flask.

Now saturate this ethereal solution of aldehyde with ammonia, by passing the dry gas (see par. **33**, Fig. 25) through the pipette, still keeping the wash bottles in ice water. After a short time colourless crystals of aldehyde ammonia separate. These may be filtered at the pump, washed with a little ether and dried.

To obtain pure aldehyde from this substance, place it in a small flask, cover with a cold mixture of equal volumes of sulphuric acid and water, and distil from a water-bath, collecting the aldehyde in a well-cooled receiver. The distillate may be dehydrated over calcium chloride, and again distilled from this.

Pure aldehyde is a colourless liquid, with a pleasant smell. B. pt. 21° C.; sp. gr. ·807 at 0°. It mixes with water, alcohol and ether in all proportions.

Chloral Hydrate.

$$CCl_3 . CH(OH)_2.$$

121. Chloral itself, or trichloracetaldehyde, is a liquid of sp. gr. 1·512 (20°), boiling at 97° C. It polymerises on standing to metachloral, and combines readily with water to form the solid crystalline hydrate, melting at 57° C.

It is soluble in water, alcohol, etc., and gives the reactions of aldehydes, reducing Fehling's solution and ammoniacal silver nitrate. Schiff's reaction is given by chloral, but not by chloral hydrate.

With aqueous sodium hydroxide it decomposes with formation of chloroform:

$$CCl_3 . CHO + NaOH = CHCl_3 + H . COONa.$$

In contact with sulphuric acid, chloral hydrate loses water forming chloral, which may be distilled.

Acetic Acid.

$$CH_3 . CO . OH.$$

122. In a half-litre round flask connected with an upright condenser place 30 grs. coarsely powdered potassium dichromate and a cold mixture of 30 grams strong sulphuric

acid and 20 c.cs. water. From the top of the condenser introduce slowly a mixture of 10 c.cs. alcohol and 10 c.cs. water, so that the reaction does not become too violent. When all is introduced, boil gently on a sand-bath until the smell of aldehyde is no longer observed on opening the flask. This will require about half an hour. The alcohol is now completely oxidised to acetic acid.

Now rearrange the condenser, and distil until the distillate is only slightly acid. The pure acid is best obtained from its salts. Neutralise the dilute acetic acid with sodium carbonate, filter and crystallise the salt. Sodium acetate forms colourless crystals, containing three molecules of water of crystallisation, $CH_3 . COONa . 3H_2O$.

To obtain pure acetic acid, the sodium salt may be mixed with concentrated sulphuric acid and distilled. The acid is a colourless liquid, solidifying at low temperatures; m. pt. 16·5°; b. pt. 119°; sp. gr. 1·055 at 15° C. The acid has a pungent smell, and blisters the skin. The salts are soluble in water, and are decomposed on heating, giving off inflammable vapours (acetone, marsh gas, etc.) and leaving a residue of the metal or its carbonate or oxide.

$$(CH_3COO)_2Ca = CaCO_3 + CH_3 . CO . CH_3 \text{ (acetone).}$$

REACTIONS. 1. Mix a little sodium acetate in a watch glass with a few drops of strong sulphuric acid, and note the smell of acetic acid.

2. To a little dry sodium acetate or glacial acetic acid in a test tube add a little alcohol and strong sulphuric acid, and warm gently. Ethyl acetate is formed, and is indicated by its pleasant fruity smell (compare par. **117**, 3).

3. To a neutral solution of an acetate add ferric chloride solution. A red-brown colour, due to ferric acetate, is produced, and on boiling, basic ferric acetate is precipitated.

$$(CH_3COO)_3Fe + 2H_2O = (CH_3COO)Fe(OH)_2 + 2CH_3COOH.$$

Lead Acetate.

(Sugar of Lead.)

Dilute 50 c.cs. of glacial acetic acid with 100 c.cs. of water and neutralise with litharge or lead carbonate, warming meanwhile on the water-bath. Filter and evaporate the solution of lead acetate. Colourless crystals are obtained, having the composition $(CH_3COO)_2Pb \cdot 3H_2O$.

Copper Acetate.

$(CH_3COO)_2Cu \cdot H_2O$.

To a solution of copper sulphate, made by dissolving 20 grs. of the salt in water, add sodium carbonate to precipitate the copper as basic carbonate. Filter by suction, wash well, transfer to a porcelain dish, and warm with acetic acid till dissolved. The acid should be diluted before use, and added in slight excess. Evaporate till concentrated and allow to crystallise.

$$CuCO_3 + 2CH_3COOH = (CH_3COO)_2Cu + H_2O + CO_2.$$
$$Cu(OH)_2 + 2CH_3COOH = (CH_3COO)_2Cu + 2H_2O.$$

Copper acetate is used as a mordant, chiefly in the form of verdigris, a basic copper acetate approximately of the formula $2Cu(C_2H_3O_2)_2 \cdot CuO$, but of varying composition. This is also used as a green pigment, but is not good, the colour being altered by moisture and light.

Acetyl Chloride.

$CH_3 \cdot COCl$.

A convenient method for the preparation of acid chlorides is that in which the pure acid is mixed with phosphorus trichloride :

$$3CH_3 \cdot CO \cdot OH + 2PCl_3 = 3CH_3 \cdot CO \cdot Cl + P_2O_3 + 3HCl.$$

An apparatus similar to that used for ethyl bromide (**118**) may be employed, except that the receiver should be protected from moisture by means of a calcium chloride tube (Fig. 38).

100 grams of glacial acetic acid are placed in the flask, which stands in a bath of cold water, and 80 grams PCl_3 are added from the tap-funnel. The mixture is heated gently until the evolution of HCl has ceased, and the liquid which has now separated into two layers, is distilled by raising the temperature of the water-bath to boiling point. The upper layer, consisting of CH_3COCl, passes over, leaving phosphorous acid behind. The liquid should be redistilled, using a thermometer, as in par. **142**, the receiver being kept dry as before.

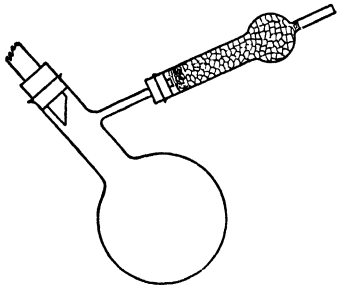

Fig. 38.

Acetyl chloride is a colourless mobile liquid, b. pt. 55°, D_0 1·130. It is readily decomposed by water forming acetic and hydrochloric acids :

$$CH_3CO \cdot Cl + H_2O = CH_3CO \cdot OH + HCl,$$

and reacts with alcohols to form ethereal salts.

Acetamide.

$$CH_3CO \cdot NH_2.$$

The chlorine atom in acid chlorides is readily replaced by $-NH_2$, by the action of ammonia. Mix a few drops of acetyl chloride with a little dry ether in a test-tube, and add a few drops of strong ammonium hydroxide. A white precipitate is at once obtained :

$$CH_3 \cdot CO \cdot Cl + 2NH_3 = CH_3 \cdot CO \cdot NH_2 + NH_4Cl.$$

This method is often convenient, but if a quantity is to be prepared, dry ammonia gas should be used, and the amide may be extracted from the drained precipitate by means of chloroform or another suitable solvent, leaving the ammonium chloride.

The amide may also be obtained by dehydrating the

ammonium salt of the acid. Prepare a quantity of ammonium acetate by neutralising 50 grams glacial acetic acid with solid ammonium carbonate. Pour the melted mass carefully into a small distilling flask, insert a thermometer dipping into the liquid, and distil, using a plain tube as condenser. The yield is improved by a preliminary heating for 6 hours at 220° C. in sealed tubes. Collect the fraction from 180-230°, which on cooling will give crystals of acetamide. These may be redistilled, or the odour of mouse excrement may be removed by crystallising from dry ether. M. pt. 82°, b. pt. 223°.

The amides are slowly hydrolysed by water, forming the ammonium salts of the acids, and are decomposed by boiling with alkalies, ammonia being set free.

Methylamine Hydrochloride.

$$CH_3 . NH_2 . HCl.$$

By the action of alkali hypobromites [1] or hypochlorites upon the acid amides, the primary amine having one C atom less in the molecule is obtained.

An apparatus like that used for ethyl bromide (**118**) is convenient, the flask being of 1 l. capacity. A thermometer also should be inserted as well as the tap-funnel, the bulb to be in the liquid. In this litre flask a solution of 50 grams KOH in about 100 c.cs. water is placed, and heated to 60-70° on a sand bath. Meanwhile 20 grams dry acetamide and 55 grams (18 c.cs.) bromine are mixed carefully in a flask or beaker, placed in the fume chamber, and to the product, which consists of acetbromamide, a solution of 20 grams KOH in 200 c.cs. water is slowly added, keeping the mixture cool. This forms methyl-isocyanate :

$$CH_3 . CO . NH_2 + Br_2 = CH_3 . CO . NHBr + HBr,$$
$$CH_3 . CO . NHBr + KOH = CH_3 . N : CO + KBr + H_2O.$$

The liquid should now be of a bright yellow colour. If not, add a little more KOH, and then run the whole gradually through the tap-funnel into the strong KOH solution

[1] Hoffmann, *Berichte* 14, 2725 (1881).

in the distilling flask, taking care that the temperature does not exceed 70-75°. Now raise the temperature gradually, after adding some broken pieces of pipe stem, and distil, collecting the methylamine (and a little NH_3) in the receiver (**118**), which contains a mixture of 50 c.cs. strong HCl and 50 c.cs. water. When the distillate is no longer alkaline, evaporate the solution of the chlorides to dryness on the water-bath, and extract the $CH_3NH_2 . HCl$ with absolute alcohol, from which it crystallises :

$$CH_3 . N : CO + 2KOH = CH_3NH_2 + K_2CO_3.$$

Chloracetic Acid.

$Cl . CH_2 . COOH.$

The hydrogen atoms of the methyl group in acetic acid can be replaced successively by chlorine, giving mono-, di- and tri-chloracetic acid.

In a weighed 250 c.c. retort, place 100 c.cs. of glacial acetic acid and 8 grs. of red phosphorus, and weigh the retort and contents. Fit the retort to a reflux condenser and arrange the apparatus near a window to receive as much light as possible. Heat the retort in a bath of boiling water and pass in dry chlorine until an increase in weight corresponding with monochloracetic acid has been obtained.

$$\underset{60 \text{ grs.}}{CH_3 . COOH} \rightarrow \underset{94{\cdot}5 \text{ grs.}}{CH_2Cl . COOH}.$$

The reaction will occupy from 24 to 48 hours. Absorb the excess of chlorine with lime or caustic soda.

When the reaction is complete, distil the product from the retort, collecting the portion between 150 and 200° C. in a beaker. Cool the beaker rapidly, rubbing the sides with a glass rod until crystallisation sets in.

Filter the crystals by suction (Fig. 14, p. 12) and redistil them. Collect the fraction between 180° and 190° C.

Monochloracetic acid is manufactured by passing chlorine through hot glacial acetic acid containing acetic anhydride. It forms colourless deliquescent crystals; m. pt. 63° C., b. pt.

186° C., sp. gr. 1·4. It is readily soluble in water, forming a solution which is more strongly acid than acetic acid. Great care should be taken when handling the acid owing to its severe action on the skin.

REACTIONS. 1. A solution of monochloracetic acid decomposes when boiled, the chlorine being replaced by hydroxyl to form hydroxyacetic or glycollic acid. The replacement of chlorine is more rapid and complete if caustic alkali or silver oxide be used :

$$CH_2Cl \,.\, COOH + H_2O = CH_2OH \,.\, COOH + HCl.$$
$$CH_2Cl \,.\, COOH + AgOH = CH_2OH \,.\, COOH + AgCl.$$

2. Ferric chloride added to a neutral solution produces a dark brown colour, and when boiled this gives a reddish brown ppt. of the basic ferric salt. To detect chlorine in this (distinction from formate, acetate and glycine) filter and wash until free from chloride (the ppt. may be brought down with solution of ferric sulphate or iron alum instead of ferric chloride), boil a portion with a little NaOH solution, acidify the filtrate with HNO_3, and add $AgNO_3$. A white ppt. of AgCl confirms chloracetic acid.

Aminoacetic Acid.

(Glycine, Glycocoll, $NH_2 \,.\, CH_2 \,.\, COOH$.)

The chlorine atom in chloracetic acid may also be replaced by the amino-group, NH_2, giving aminoacetic acid :

$$CH_2Cl \,.\, COOH + 2NH_3 = CH_2NH_2 \,.\, COOH + NH_4Cl.$$

Place 600 c.cs. of ammonia solution of sp. gr. ·907 in a wide mouthed bottle containing a stirrer (Fig. 11, p. 10). Slowly run in from a tap-funnel a solution of 50 grs. of monochloracetic acid in 50 c.cs. of water, stirring all the time. Allow the mixture to stand for 24 hrs., transfer it to a flask, drive off the excess of ammonia by passing a current of steam, and evaporate the liquid to a small bulk. Add copper carbonate in slight excess and filter. Evaporate till crystallisation of the copper salt commences, and allow to cool. Evaporate the filtrate until more crystals are

obtained. Filter, dissolve the copper salt in water, precipitate the copper with sulphuretted hydrogen, filter and evaporate the filtrate to crystallise the aminoacetic acid.

Aminoacetic acid forms large monoclinic crystals; m. pt. 232-236° C. It is very soluble in water and only slightly soluble in alcohol and ether.

REACTIONS. 1. To an aqueous solution of glycine add a drop of copper sulphate solution. A deep blue solution of the copper salt is formed.

2. To a solution add nitrous acid. Nitrogen is liberated and hydroxyacetic acid formed.

3. To a solution add ferric chloride. A deep red colour is produced, and on boiling this yields a brown ppt. of the basic ferric salt. This precipitate, when dissolved in dilute HCl and treated with HNO_2, liberates nitrogen (distinction from formate, acetate and chloracetate).

ETHEREAL SALTS.

Ethyl Acetate.

$CH_3 . CO . OC_2H_5$.

123. In a half-litre distilling flask place a mixture of 50 c.cs. alcohol and 50 c.cs. strong sulphuric acid. Fit the flask with a tap-funnel and a thermometer, the latter dipping into the liquid, and with a condenser and receiver. The flask is heated on a sand-bath until the thermometer indicates 140°, and at this temperature a mixture of 100 c.cs. alcohol and 100 c.cs. glacial acetic acid is dropped into the liquid, as rapidly as ethyl acetate distils over. The distillate is a mixture of ethyl acetate, alcohol, water and acetic acid, with sulphurous acid if any charring has occurred. It is washed with sodium carbonate solution in a separating funnel until neutral, then with calcium chloride solution, and then dried over anhydrous sodium sulphate.

Filter into a dry distilling flask, and distil over a naked flame; some ether passes over first. Collect as ethyl acetate the portion from 74-80°.

Ethyl acetate is a colourless liquid, with a pleasant fruity odour. It mixes with alcohol and ether in all proportions and is soluble in about 11 times its volume of water. B. pt. 77° C.; sp. gr. ·9068 at 15° C.

Amyl Acetate.

$CH_3 . CO . OC_5H_{11}$.

Commercial amyl compounds are generally prepared from fusel oil, the residue left in the rectification of alcohol. This consists chiefly of inactive amyl alcohol, with some active amyl alcohol, $C_2H_5 . CH(CH_3) . CH_2OH$, various esters, etc., and compounds prepared from it are not pure.

Mix carefully in a round-bottomed flask 25 c.cs. of commercially pure amyl alcohol, 25 c.cs. glacial acetic acid, and 12·5 c.cs. conc. sulphuric acid. Heat on a water-bath under a reflux condenser for five hours, and allow to stand overnight. When cold, pour the mixture into cold water, and allow to settle in a separating funnel. The upper layer is the amyl acetate. It is washed with a strong solution of sodium carbonate, then with water, dried over calcium chloride and distilled.

Amyl acetate is a colourless liquid with a smell resembling that of jargonelle pears. It is sparingly soluble in water, but mixes readily with organic solvents. B. pt. 138·5-139° C.; $D\,{}^{15}_{4} = 0{\cdot}875$.

Amyl acetate readily dissolves gun-cotton, tannin, celluloid, camphor and resins.

Ethyl Nitrite.

$C_2H_5O . NO$.

Dissolve 34·5 grs. of sodium nitrite in 120 c.cs. of water contained in a half-litre flask.

Add 7·5 c.cs. of concentrated sulphuric acid to a mixture of 40 c.cs. of alcohol with 75 c.cs. of water. Cool this mixture with ice, and while stirring continually pour into it slowly the solution of sodium nitrite. The ethyl nitrite separates as an upper layer. Run off the lower aqueous

layer from a separating funnel, wash the nitrite with very cold water, and dry with calcium chloride in a corked flask. Distil from a small dry distilling flask.

Ethyl nitrite is a colourless liquid with a smell recalling that of apples. It is slightly soluble in water and miscible with alcohol. B. pt. 18° C.; sp. gr. 0·900 at 15·5° C. It is neutral in reaction, but on keeping it becomes acid, and evolves nitric oxide. The acidity is due to acetic acid produced by atmospheric oxidation of acetaldehyde, which is always present in the preparation.

Ethyl nitrite (spirit of nitrous ether) is used as a diaphoretic and diuretic.

Hydrolysis of Ethyl Acetate.

124. In a small round flask fitted with upright condenser place 20 c.cs. ethyl acetate and 15 grs. of caustic potash dissolved in 50 c.cs. of water. Boil gently over wire gauze until the upper layer of acetate has disappeared, and no smell of the acetate can be detected. Then distil about 20-25 c.cs. of liquid; this is a mixture of alcohol and water. Add solid potassium carbonate until the alcohol separates as an upper layer, which may then be distilled.

Neutralise a portion of the residue in the flask, and test for acetic acid as above. The ethyl acetate has been hydrolysed or saponified.

$$CH_3COOC_2H_5 + H_2O = CH_3COOH + C_2H_5OH.$$

Soaps and Glycerol.

125. Soaps are the sodium salts (hard soaps) or potassium salts (soft soaps) of the acids occurring in the natural fats and oils, from which they are prepared by the action of the caustic alkalies. Chemically, the process is similar to that used in the last experiment.

Weigh out 100 grs. of beef suet or palm oil, place in a large porcelain dish with half its bulk of water, and warm until melted. Add 20 grams of caustic soda dissolved in 100 c.cs. of water, and boil gently with frequent stirring, or

blow steam into the liquid, until the mixture is homogeneous, and all fat has disappeared. Now add 200 c.cs. of a saturated solution of common salt, stir well, and set aside to cool. The soap will separate as a firm curd on the surface, and may be removed with a spatula.

$$\underset{\text{Glycerin palmitate (Palmitin).}}{(C_{15}H_{31}COO)_3C_3H_5} + 3NaOH = \underset{\text{Sodium palmitate.}}{3C_{15}H_{31}COONa} + \underset{\text{Glycerin.}}{C_3H_5(OH)_3}.$$

Glycerol.

$C_3H_5(OH)_3$.

The lye or liquor left after the removal of the curd in the preparation of soap (**125**) is an aqueous solution of glycerol and salt together with a little alkali. After a purifying treatment the liquor is evaporated under reduced pressure to remove the salt; the glycerol is then distilled with superheated steam and the distillate again evaporated in vacuo.

Pure glycerol is a colourless solid of m. pt. 20° C., but is usually met with as a sweet viscous hygroscopic liquid; b. pt. 290° C., sp. gr. 1·24. It decomposes slightly near its boiling point, giving off acrolein.

$$CH_2OH \,.\, CHOH \,.\, CH_2OH = CH_2 : CH \,.\, CHO + 2H_2O.$$

Glycerol is miscible with water and alcohol in all proportions.

REACTIONS. 1. Heat a drop of glycerol with twice its weight of potassium hydrogen sulphate. Acrolein is given off and can be recognised by its smell.

2. Dip a borax bead in glycerol and heat in a bunsen flame. The flame is coloured green by the boric acid.

Glycerol is used to some extent in pharmacy, but chiefly in the manufacture of nitroglycerine (glycerol trinitrate).

Ether. $(C_2H_5)_2O$.

126. Ethers have structurally the same relation to the alcohols that sodium oxide has to its hydroxide.

$$\begin{matrix} Na \\ Na \end{matrix}\!\!>\!O\,;\quad Na-OH\,;\quad \begin{matrix} C_2H_5 \\ C_2H_5 \end{matrix}\!\!>\!O\,;\quad C_2H_5-OH.$$

They are prepared by the dehydration of alcohols, usually by means of sulphuric acid ; the alkyl hydrogen sulphate is first formed, and reacts with a second molecule of the alcohol, producing the ether :

$$C_2H_5OH + H_2SO_4 = C_2H_5HSO_4 + H_2O.$$
$$C_2H_5HSO_4 + C_2H_5OH = (C_2H_5)_2O + H_2SO_4.$$

The ether and some of the water distil, while sulphuric acid is regenerated. A large quantity of ether may therefore be prepared from a relatively small amount of sulphuric acid.

In a half-litre distilling flask, connected to a long condenser (see preparation of aldehyde, par. **120**), and fitted with a thermometer reaching nearly to the bottom, and a tap-funnel, place a mixture of 120 c.cs. alcohol and 80 c.cs. concentrated sulphuric acid. Heat the flask on a sand-bath to 140°, and keeping the temperature at 140-145°, run in alcohol as fast as the ether distils. This should be collected in a well-cooled receiver, connected to the condenser by means of an adapter. It is advisable also to place a tinplate or cardboard screen across the working bench between the receiver and the burner, as ether vapour is very inflammable.

Collect about half a litre of ether, transfer to a separating funnel and wash with dilute sodium hydroxide to remove sulphurous acid. Then wash with a strong solution of calcium chloride or common salt to remove alcohol, and finally transfer the ether to a dry flask and allow to stand over dry calcium chloride. The last traces of water and alcohol can only be removed with metallic sodium, which has no action on pure ether.

Ether is a colourless, mobile liquid, boiling at 35° C., and of sp. gr. ·720 at 15°. It burns with a luminous flame, is miscible with alcohol, but sparingly soluble in water (9 vols.).

Note. In all operations with ether, the neighbourhood of flames must be avoided.

Chloroform.

$CHCl_3$.

127. 150 grs. of good bleaching powder are triturated in a large mortar with 500-600 c.cs. water, using the water in portions, and the milky liquid is poured into a 2-litre flask. To this liquor add 35 c.cs. alcohol or acetone, connect with a good condenser, and warm gently on a sand-bath. Chloroform and water, with a little alcohol or acetone, distil. When no more can be obtained, dilute the distillate with water to precipitate the chloroform completely, separate in a funnel, wash with caustic soda, then with water, and dry in a corked flask with dry calcium chloride. Distil the chloroform from a small dry distilling flask.

Chloroform is a colourless, highly-refractive liquid of sp. gr. 1·526 at 0°; b. pt. 61° C; miscible with alcohol or ether, but only slightly soluble in water. It has a sweet smell, and is a valuable anaesthetic.

Iodoform.

CHI_3.

In a quarter-litre flask place 20 grs. crystallised sodium carbonate and 100 c.cs. water and warm on the steam or water-bath. When the carbonate is dissolved, add 10 c.cs. acetone, and then, keeping the temperature at 60-70°, add gradually 10 grs. of powdered iodine. Iodoform separates as a pale yellow crystalline powder. Filter on the pump, wash with cold water, and crystallise from a little acetone.

Iodoform crystallises in thin, yellow, hexagonal plates, melting at 119° C. Insoluble in water; soluble in alcohol, ether, chloroform, etc. It is volatile on heating and the vapour has anaesthetic properties. (Note the structural resemblance to chloroform.) It is extensively used in surgery as an antiseptic dressing, and in ointments, and has a peculiar and very persistent odour.

Acetone.

(Dimethylketone) $CH_3 . CO . CH_3$.

128. Acetone can be obtained from crude wood spirit (**129**). It is now manufactured by heating calcium or barium acetate at about 400° C. preferably in a current of carbon dioxide. In the latter case the yield is almost quantitative :

$$Ba(O . OC . CH_3)_2 = BaCO_3 + CH_3 . CO . CH_3.$$

By the fermentation of starches with Fernbach's bacteria, 15-20 per cent. of the starch is converted to acetone.

Acetone is a colourless mobile liquid with an agreeable smell. B. pt. 56·3° C.; sp. gr. ·8144 at 0° C. It is very inflammable and mixes in all proportions with alcohol, ether and water.

REACTIONS. 1. To an aqueous solution of acetone add a little iodine solution and then sodium hydroxide until the colour of the iodine is nearly destroyed. Iodoform is produced (**117**, 5).

2. To an aqueous solution of acetone add a freshly prepared solution of sodium nitroprusside and make alkaline with sodium hydroxide. A ruby red colouration is produced (Legal's test).

3. To a strong aqueous solution of acetone add a freshly prepared strong solution of sodium bisulphite. A white crystalline bisulphite compound, $(CH_3)_2C(OH) . SO_3 . Na$, is precipitated.

Acetoxime.

$(CH_3)_2C : N . OH$.

Dissolve 3 grams of sodium hydroxide in 20 c.cs. of water in a small flask, cool well, and add 5 grams of hydroxylamine hydrochloride. To this add now 6 grams of pure acetone, mix well by gentle shaking, cork the flask and allow to stand in the cold for 24 hours. Acetoxime crystallises, but it is best extracted with ether. Test the liquid first for free hydroxylamine, by boiling with Fehling's solution. There should be none. Extract the mixture with an equal

volume of ether. Repeat this twice, and filter the whole ethereal extract through a dry filter. Distil off the ether from a water-bath, and pour the residue into a small basin to crystallise.

Acetoxime crystallises in colourless needles, melting at 61-2°. On boiling with dilute acid it is hydrolysed, liberating hydroxylamine, which reduces Fehling's solution.

Methyl Alcohol.

$CH_3 . OH.$

129. This alcohol is obtained in the distillation of wood, and is the chief constituent of wood spirit. The pure alcohol is a mobile colourless liquid; b. pt. 66-67°, sp. gr. ·796 at 20°. It is miscible with water, and in general properties resembles ordinary alcohol, but it does not give the iodoform reaction. Commercial wood spirit contains a little acetone, which does give iodoform.

REACTIONS. 1. Methyl alcohol is readily oxidised on heating with potassium dichromate and sulphuric acid, giving formaldehyde and formic acid.

$$CH_3OH + O = H . CHO + H_2O.$$
$$H . CHO + O = H . COOH.$$

The formic acid may be distilled and detected as under (p. 104).

2. To a little methyl alcohol add some salicylic acid and strong sulphuric acid and warm gently. Methyl salicylate (oil of wintergreen p. 130) is produced.

Formaldehyde.

$H . CHO.$

Formaldehyde (or methaldehyde) bears the same relation to methyl alcohol that acetaldehyde bears to ethyl alcohol. It is a gas with a characteristic smell and antiseptic properties, condensing to a liquid at −21° C., and is known chiefly in the form of its aqueous solution, formalin, which contains about 40 per cent. of the gas.

Formaldehyde may be prepared by the general methods

for preparing aldehydes, and is readily obtained by the oxidation of methyl alcohol with atmospheric oxygen.

In a small beaker place a few c.cs. of methyl alcohol. Warm the alcohol and hold in the vapour a hot spiral of platinum wire. Observe the effect of holding the spiral at different distances from the surface of the liquid and also the peculiar smell of formaldehyde.

Owing to its antiseptic properties many kinds of formaldehyde lamp have been introduced, and a simple one may be made as follows :—Fill an ordinary spirit lamp with methyl alcohol and arrange round the wick a spiral of platinum wire, light the lamp for a short time and then extinguish the flame. A spiral of the proper size will continue to glow, and a constant production of formaldehyde will result.

On a large scale formaldehyde is produced by aspirating air through heated methyl alcohol and passing the mixture through an "oxidiser" containing copper or silver gauze as a catalyst. The product is dissolved in water to make a 40 per cent. solution known commercially as formalin, having a spec. grav. of 1·08. The solution when evaporated leaves paraformaldehyde, $(HCH : O)_n$, as a colourless solid.

REACTIONS. 1. Warm a few c.cs. of formalin with ammoniacal silver solution in a test-tube placed in hot water. A mirror of metallic silver is produced (compare **120**, 1).

2. Add a few c.cs. of conc. ammonia solution to a few c.cs. of formalin and evaporate on a water bath. Crystals of hexamethylenetetramine (urotropine), $(CH_2)_6N_4$, are produced (acetaldehyde and its homologues give aldehyde ammonia) (p. 86).

3. Pass sulphur dioxide through a dilute solution of magenta till the colour just disappears, and to a little of this solution (Schiff's reagent) add a few drops of formalin. The colour returns (Schiff's test for aldehydes).

4. Add a drop of formalin to 100 c.cs. of water. Then add 2 c.cs. of a 1 per cent. solution of phenylhydrazine hydrochloride, 1 c.c. of a 5 per cent. solution of potassium ferricyanide and a few c.cs. of conc. hydrochloric acid. A rose red colour is produced (Schryver's test).

Formic Acid.

$H . CO . OH.$

The acid may be obtained by oxidising methyl alcohol, but is most conveniently prepared from oxalic acid, by decomposing it in presence of glycerol, which prevents the further decomposition of the formic acid.

$$H_2C_2O_4 = H . COOH + CO_2.$$

In a large retort place 100 c.cs. glycerol and 50 grs. crystallised oxalic acid. Attach a condenser, and fit a thermometer in the retort, with the bulb dipping into the liquid. Heat on a sand-bath. At 90° carbon dioxide begins to be evolved, and at 100-110° water and formic acid distil. When the temperature reaches 110° allow to cool to about 80°, add another 50 grs. of oxalic acid and distil as before to 110°. Repeat until 150-200 grs. oxalic acid have been used. The residue in the retort still contains some glyceryl formate. It should be transferred to a large flask, and distilled with steam (p. 125) until the distillate is no longer acid. The distillate consists of an aqueous solution of formic acid. It may be converted into

Lead Formate.

$Pb(HCO . O)_2.$

Neutralise the heated liquid by stirring in lead carbonate until the addition of more produces no further effervescence. Filter, wash the residue, and evaporate the filtrate. The lead formate crystallises in long colourless needles.

Pure formic acid may be obtained by heating the dry lead salt to 100° in a stream of dry sulphuretted hydrogen,

$$Pb(HCOO)_2 + H_2S = PbS + 2H . COOH,$$

or by distilling the dilute acid until the constant boiling hydrate ($4CH_2O_2 + 3H_2O$) is obtained, boiling at 107·1° at 760 mm. This contains 77 per cent. of formic acid. Dissolve in this, anhydrous oxalic acid, which on crystallising will remove the water. The liquid remaining is now almost pure formic acid, and may be distilled again.

Properties. A colourless, mobile liquid, m. pt. 8·6° C., b. pt. 100·6° C., sp. gr. 1·22 at 20°. It mixes with water and alcohols in all proportions, has a pungent, acid smell, and raises blisters on the skin.

REACTIONS. 1. Heated with concentrated sulphuric acid, formic acid and formates decompose into carbon monoxide and water.

$$H . COOH = H_2O + CO.$$

2. Formic acid reduces ammoniacal silver solutions forming a mirror of metallic silver, and mercuric chloride solution giving a white precipitate of mercurous chloride.

3. Neutral solutions of formates give a red-brown colour with ferric chloride, and on boiling, a brown precipitate of basic ferric formate (compare acetic acid, **122**, 3).

Lactic Acid.

(α-Hydroxypropionic acid) $CH_3 . CHOH . COOH$.

130. Lactic acid may be prepared by boiling α-chlor- or α-brom-propionic acid with water, or by warming these with silver oxide. It may also be obtained from acetaldehyde, by hydrolysis of its cyanhydrin :

$$CH_3CHO \xrightarrow[HCN]{} CH_3CHOH . CN \xrightarrow[H_2O]{} CH_3CHOH . COOH.$$

It is manufactured by the lactic fermentation of glucose, lactose or cane sugar :

$$C_{12}H_{22}O_{11} + H_2O \rightarrow 4C_3H_6O_3.$$

Pure anhydrous lactic acid is a crystalline solid of m. pt. 18° C., but the commercial pure lactic acid (75 per cent.) is a colourless syrupy liquid with a sour smell and taste. Prepared as above lactic acid is optically inactive, but can be resolved into a dextro- and a lævo-form. The dextro-form is found in muscle and is known as para- or sarco-lactic acid. Lactic acid is used in dyeing and printing.

REACTIONS. 1. Lactic acid solutions decolourise $KMnO_4$ slowly in the cold, rapidly on warming, evolving CO_2 and some acetaldehyde.

2. $SnCl_2$ solution just cleared with HCl gives with solutions of lactates a white crystalline ppt. of basic stannous lactate:

$$(CH_3CHOH \,.\, COOSn)_2O.$$

3. Lactic acid, distilled with an equal bulk of conc. H_2SO_4 diluted with twice its volume of water, decomposes into acetaldehyde and formic acid:

$$CH_3CH(OH)COOH + H_2O \rightarrow H \,.\, COOH + CH_3CH(OH)_2$$
$$\rightarrow CH_3CHO + H_2O.$$

These can be detected in the distillate by means of ammoniacal silver and $HgCl_2$ respectively.

4. The acid may be converted into the zinc or calcium salt and this examined under the microscope. The zinc salt, $Zn(C_3H_5O_3)_2 \,.\, 3H_2O$ forms clusters of colourless, quadratic prisms, which are very characteristic.

Oxalic Acid.

$$\begin{array}{l} COOH \\ | \\ COOH \end{array} \,.\, 2H_2O.$$

131. Oxalic acid is manufactured by oxidation of wood sawdust. It may also be obtained from many carbohydrates by oxidising with nitric acid.

In a large beaker place 100 c.cs. strong nitric acid, and 30 grams powdered cane sugar. Cover with a clock glass and heat gently on a water or steam bath, in the fume chamber, until the reaction sets in. Abundant red fumes are evolved. When the first violent reaction is over, evaporate in the fume chamber to about 30 c.cs. and allow to cool. Oxalic acid crystallises in long colourless crystals, which should be drained on a small porcelain funnel and recrystallised from a little hot water.

The acid forms colourless crystals, containing two molecules of water of crystallisation. The crystals melt at 101·5°, losing their water, and the anhydrous acid sublimes slowly, melts at 189°, and decomposes at higher temperatures into carbon dioxide and formic acid.

REACTIONS. 1. Heated with concentrated sulphuric acid, oxalates decompose, without charring, into carbonic oxide, carbon dioxide, and water (compare par. **35**).

$$H_2C_2O_4 = CO + CO_2 + H_2O.$$

2. To a neutral solution of an oxalate add calcium chloride; a white crystalline precipitate of calcium oxalate, CaC_2O_4, is formed, insoluble in ammonia or dilute acetic acid.

3. To a solution of oxalic acid or a salt add dilute sulphuric acid and a little potassium permanganate, and warm gently. The permanganate is reduced and decolourised, and the oxalic acid oxidised to carbon dioxide and water.

$$H_2C_2O_4 + O = 2CO_2 + H_2O.$$

Succinic Acid.

$$\begin{array}{l} CH_2 . COOH. \\ | \\ CH_2 . COOH. \end{array}$$

This acid crystallises in colourless monoclinic prisms or plates, melting at 182° C. Heated quickly to about 235° C., it forms the anhydride,

$$\begin{array}{l} CH_2 . CO \\ \vdots \\ CH_2 . CO \end{array} \!\!> O.$$

REACTIONS. 1. The calcium, lead and silver salts are thrown down as white ppts. from strong solutions of neutral succinates.

2. Ferric chloride gives a bulky brown ppt. of basic ferric succinate, $(C_4H_4O_4)_3Fe_2 . Fe_2O_3$, which on boiling with ammonia forms ammonium succinate partly or completely, leaving $Fe(OH)_3$. On adding $BaCl_2$ and alcohol to the filtrate, a white ppt. of barium succinate is obtained (distinction from benzoates).

3. Heat a small crystal of succinic acid or anhydride gently with twice its bulk of resorcinol and a pellet of fused zinc chloride. A dark red mass is obtained. When cool, dissolve in a little caustic soda and pour into cold water. A fine greenish yellow fluorescence is shown (succineine).

Tartaric Acid.

$$\begin{array}{l} CH\,.\,OH\,.\,COOH. \\ | \\ CH\,.\,OH\,.\,COOH \end{array}$$

132. The acid crystallises in large monoclinic prisms, readily soluble in water or alcohol. The solution turns the plane of polarised light to the right, or is dextro-rotatory. Heated rapidly, the acid melts at 167-170°, and then chars, as do the salts, and evolves vapours smelling of burnt sugar. Charring also occurs on heating with strong sulphuric acid.

REACTIONS. 1. To a neutral solution of a tartrate add calcium chloride solution, cool and shake well. Crystalline calcium tartrate separates, soluble in acetic acid, insoluble in ammonia.

2. To a neutral solution of a tartrate add silver nitrate: a white crystalline precipitate of silver tartrate is formed. This is soluble in ammonium hydrate, and the solution on warming gives a mirror of metallic silver.

3. To a solution of tartaric acid add some saturated solution of potassium chloride, cool and shake: a white crystalline precipitate of potassium hydrogen tartrate, $KC_4H_5O_6$, is obtained.

Potassium Hydrogen Tartrate.

(Cream of Tartar), $K\,.\,H\,.\,C_4H_4O_6$.

This salt is deposited, in the form of argol, during the fermentation of grape juice. It is nearly insoluble in alcohol, and while readily soluble in hot water, requires sixty parts of cold water. The commercial cream of tartar is made by purifying crude argol.

Dissolve 20 grs. of tartaric acid in 100 c.cs. of warm water, and filter if necessary. Divide into two equal parts, and carefully neutralise one half with a clear solution of about 9 grams caustic potash in 50 c.cs. water. This liquid now contains normal potassium tartrate $K_2C_4H_4O_6$. Heat to boiling, and add the other half of the tartaric acid solution, also heated, and set aside in a covered beaker to crystallise. Yield, about 20 grams.

Potassium Sodium Tartrate.

(Rochelle Salt), $K . Na . C_4H_4O_6 . 4H_2O$.

Mix 20 grams potassium hydrogen tartrate with 300 c.cs. water in a flask, and while warming add gradually a solution of 15 grams crystallised carbonate of soda, until the tartrate is completely dissolved and the solution exactly neutralised. If too much soda is introduced, add a little more of the bitartrate. Filter the hot neutral liquid and evaporate. Rochelle salt crystallises in colourless transparent prisms. Yield, about 20 grams.

The salt is readily soluble in water, and in taste resembles common salt. It is used in medicine as a mild laxative. Heated in a dry tube, it first loses the water of crystallisation and then chars. For reactions see Tartaric Acid (above).

Potassium Antimonyl Tartrate.

(Tartar Emetic), $K(SbO)C_4H_4O_6 . \frac{1}{2}H_2O$.

In a 500 c.c. round flask place 20 grs. cream of tartar and an equal weight of antimony oxide. Add 400 c.cs. of water, and boil gently until no more of the oxide will dissolve, and the liquid no longer contains the acid salt. Add water from time to time to keep to the original volume. Filter hot. On cooling, small colourless rhombic octahedra of the double salt crystallise.

These lose their water of crystallisation on exposure to air, and crumble to powder.

Tartar emetic is soluble in 14 parts of water at 10°. The solution has an unpleasant metallic taste. With sulphuretted hydrogen in presence of hydrochloric acid the antimony is precipitated as orange-red antimony trisulphide. The substance is used as a mordant in cotton dyeing, and in medicine. In small doses of 0·1 to 0·7 of a grain its action is sudorific, but in larger doses of 1-3 grains it acts as an emetic. An excess is poisonous.

Citric Acid.

$C_6H_8O_7 . H_2O$.

This crystallises in large rhombic prisms with one molecule of water of crystallisation. It is soluble in 4 parts of

water at 20°, and easily soluble in alcohol. The anhydrous acid melts at 153°, and at higher temperatures darkens and decomposes.

REACTIONS. 1. Heated with strong sulphuric acid, citrates evolve carbon monoxide and carbon dioxide, and are slowly blackened.

2. Calcium chloride in neutral solutions gives no precipitate in the cold, but on boiling, a white, crystalline precipitate of calcium citrate, $Ca_3(C_6H_5O_7)_2$, is produced.

3. Silver nitrate gives with neutral solutions of citrates a white, curdy precipitate of silver citrate. This is soluble in ammonia, but is reduced only after long-continued boiling.

CYANOGEN DERIVATIVES.

133. Potassium Ferrocyanide.

(Yellow Prussiate of Potash), $K_4FeC_6N_6 \cdot 3H_2O$.

This salt is the starting substance for the preparation of most of the cyanogen compounds. It was formerly prepared by igniting carbonised nitrogenous animal matter (horn and leather shavings, hoofs, blood, etc.) with crude potash and iron. Ferrocyanides are now produced in various ways from the hydrocyanic acid in crude coal gas.

It may be obtained by adding a solution of pure ferrous sulphate to one of potassium cyanide until a slight permanent precipitate is produced. Heat to boiling, filter and evaporate the clear filtrate. On cooling, potassium ferrocyanide crystallises in large yellow monoclinic prisms, with three molecules of water of crystallisation. This water is expelled on heating to 100°, and the crystals disintegrate to a white powder.

$$FeSO_4 + 2KCN = Fe(CN)_2 + K_2SO_4,$$
$$Fe(CN)_2 + 4KCN = K_4Fe(CN)_6.$$

Hydroferrocyanic Acid.

H_4FeCy_6.

Use potassium ferrocyanide, $K_4FeCy_6 . 3H_2O$.

DRY REACTIONS.

1. Heated alone, potassium ferrocyanide decomposes into cyanide, nitrogen and a carbide of iron :

$$K_4FeCy_6 = 4KCy + N_2 + FeC_2 (\text{or } Fe + 2C).$$

2. Heated with concentrated sulphuric acid, carbon monoxide is evolved (see preparation of this, **35**, 3).

REACTIONS IN SOLUTION.

1. **Silver nitrate** precipitates white silver ferrocyanide, Ag_4FeCy_6, insoluble in dilute acids or AmOH, soluble in potassium cyanide.

2. **Copper sulphate** produces a brown (CuK_2FeCy_6) or chocolate (Cu_2FeCy_6) precipitate, according to the proportions employed.

3. **Ferrous salts** give a white precipitate of potassium ferrous ferrocyanide, which is quickly oxidised to the blue ferric salt :

$$3FeSO_4 + 2K_4FeCy_6 = Fe_3K_2(FeCy_6)_2 + 3K_2SO_4.$$

Owing to this oxidation the usual precipitate is of a light-blue colour.

4. **Ferric salts** give a dark-blue precipitate of Prussian blue, ferric ferrocyanide,

$$4FeCl_3 + 3K_4FeCy_6 = Fe_4(FeCy_6)_3 + 12KCl.$$

These precipitates are insoluble in dilute acids, but are decomposed by caustic alkalies, forming the alkali ferrocyanide and ferrous or ferric hydroxide.

$$Fe_3K_2(FeCy_6)_2 + 6KOH = 2K_4FeCy_6 + 3Fe(OH)_2.$$
$$Fe_4(FeCy_6)_3 + 12KOH = 3K_4FeCy_6 + 4Fe(OH)_3.$$

Potassium Ferricyanide.

(Red Prussiate of Potash), $K_3FeC_6N_6$.

By oxidation of the iron in the previous substance, the ferrocyanide passes into ferricyanide of potassium. This

may be effected by passing chlorine gas into a solution of potassium ferrocyanide until the liquid is dark red in colour, and a drop no longer gives a blue colouration with a drop of ferric chloride. The liquid now contains potassium ferricyanide and chloride.

$$2K_4FeCy_6 + Cl_2 = K_6Fe_2Cy_{12} + 2KCl.$$

On evaporating the clear liquid the ferricyanide crystallises in red rhombic prisms.

Another method consists in oxidising the ferrocyanide by boiling with freshly prepared lead peroxide. 25 grams potassium ferrocyanide are dissolved in 400 c.cs. water, 10 grams of lead peroxide mixed to a paste with water are added, and the mixture is boiled on a sand-bath until no trace of ferrocyanide can be detected in a filtered portion of the liquid, after acidifying with dilute hydrochloric acid. The liquid is now strongly alkaline owing to the formation of caustic potash, which dissolves some of the lead monoxide.

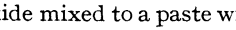

$$2K_4FeCy_6 + PbO_2 = 2K_3FeCy_6 + K_2PbO_2.$$

Pass a stream of carbon dioxide through the liquid during the boiling until all the lead is precipitated, and filter. Crystallise the potassium ferricyanide as in the first method. Yield about 20 grs.

Hydroferricyanic Acid.

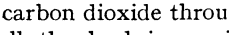

$$H_3FeCy_6.$$

REACTIONS IN SOLUTION. Use potassium ferricyanide, K_3FeCy_6.

1. **Silver nitrate** precipitates orange-coloured silver ferricyanide, Ag_3FeCy_6, insoluble in dilute HNO_3, soluble in AmOH or KCy solution.

2. **Ferrous salts** give a dark-blue precipitate of ferrous ferricyanide (Turnbull's blue).

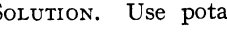

$$3FeSO_4 + 2K_3FeCy_6 = Fe_3(FeCy_6)_2 + 3K_2SO_4.$$

This is insoluble in water or dilute acids, but is decomposed by caustic alkalies, into alkali ferricyanide and ferrous hydroxide.

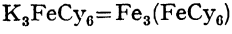

$$Fe_3(FeCy_6)_2 + 6KOH = 2K_3FeCy_6 + 3Fe(OH)_2.$$

The ferricyanide rapidly changes to ferrocyanide, while the iron hydroxide is oxidised.

3. **Ferric salts** give only a brown colouration.

It will be observed that the iron contained in the acid radicals, or anions, of ferro- and ferricyanides is not precipitated by KOH, unlike the basic radical or cation. A method for the complete decomposition of complex cyanides will be found in par. **218**.

If it be desired to test for simple cyanides in a mixture containing ferro- and ferricyanides, or to remove the simple cyanides, the mixture may be distilled with excess of sodium bicarbonate, which decomposes cyanides but not the complex cyanides :

$$NaCN + NaHCO_3 = Na_2CO_3 + HCN.$$

The distillate is then examined for cyanide, and the residue for ferro- and ferricyanides.

Hydrocyanic Acid.

HCN.

Cyanides of the alkali metals are readily soluble in water, those of the alkaline earths sparingly soluble, the solutions being alkaline in reaction. Those of the heavy metals, except mercuric cyanide, $Hg(CN)_2$, are insoluble in water, but generally soluble in a solution of potassium cyanide. Most cyanides are decomposed by dilute acids, evolving hydrocyanic acid.

When heated alone, most heavy metal cyanides decompose, evolving the poisonous, combustible cyanogen gas. The alkali cyanides fuse on heating, and oxidise in air to cyanates. Heated with sulphur, potassium cyanide forms thiocyanate, KSCN, which produces a blood-red colour with ferric chloride. Hence the use of potassium cyanide as a reducing agent for oxides and sulphides.

REACTIONS IN SOLUTION. Use a solution of potassium cyanide.

1. **Silver nitrate** gives a white curdy precipitate of silver cyanide, AgCy, which dissolves until one molecule of silver nitrate has been added for each two molecules of potas-

sium cyanide, forming the compound AgCy . KCy. The addition of more $AgNO_3$ produces a permanent precipitate of AgCy, which greatly resembles AgCl, being soluble in AmOH, $Na_2S_2O_3$, etc., and insoluble in dilute HNO_3. To distinguish and separate silver cyanide from the halide salts, ignite the dry precipitate ; the cyanide decomposes, leaving metallic silver, which may be dissolved by strong HNO_3 ; the halide salts fuse without decomposition, and AgCl may then be extracted with strong AmOH.

2. Free HCN, liberated from KCN with a little dilute acid in a small beaker, decomposes yellow **ammonium sulphide** placed on the bottom of a watch-glass over the beaker, forming thiocyanate.

$$Am_2S_2 + HCN = AmSCN + AmHS.$$

This, when acidified with HCl to decompose the hydrosulphide, gives a deep-red colour with $FeCl_3$. This is a very delicate test for hydrocyanic acid.

3. To the solution of cyanide add a mixture of $FeSO_4$ and $FeCl_3$ solutions, and acidify with HCl to dissolve hydroxides of iron. A deep-blue precipitate, or a blue or green colouration of **Prussian blue**, is obtained. (See Ferrocyanic Acid).

Thiocyanic Acid.

HSCN.

REACTIONS IN SOLUTION. Use a solution of potassium or ammonium thiocyanate.

1. **Silver nitrate** produces a white curdy precipitate of silver thiocyanate, AgSCN, insoluble in dilute acids, soluble in AmOH.

2. **Copper sulphate**, to which sulphurous acid has been added, forms a white precipitate of cuprous thiocyanate, $Cu_2(SCN)_2$. On ignition this leaves cuprous sulphide, Cu_2S, and is employed as a means of estimating copper (**266, 329**).

3. **Ferric chloride** solution gives a deep-red colouration, owing to the formation of the soluble ferric thiocyanate, $Fe(SCN)_3$. Ferrous salts give no colour.

Detection of Halides and Nitrates in presence of cyanides.

The above cyanogen acids must be removed before testing for halogens. To do this, take a portion of the neutral solution prepared as directed in par. **213**, make slightly acid with dilute sulphuric acid, and add a solution of zinc sulphate so long as a precipitate forms. Cyanides and complex cyanides are precipitated as insoluble zinc salts, and halides may be detected in a portion of the filtrate by means of silver nitrate.

Another portion of the filtrate may be tested for nitrates (after removing iodides also if present, **191**), as the complex cyanides interfere also with the reactions for nitrate and nitrite.

Urea.

(Carbamide) $CO(NH_2)_2$.

134. Urea is readily produced by the addition of ammonia to carbonyl chloride (compare acetamide p. 90). It is of interest as being the first organic substance to be synthesised. Wöhler, in 1828, obtained it by the action of heat on ammonium cyanate :

$$NH_4 . N . CO \rightarrow CO : (NH_2)_2.$$

Potassium cyanate is obtained by the oxidation of potassium cyanide (see p. 112 and use in qualitative analysis, **154**).

To prepare urea, heat 50 grs. of potassium cyanide in an iron dish, and when fusion begins, add gradually, while stirring, 140 grs. of red oxide of lead. Continue to heat, and when frothing ceases pour the melt on to an iron plate and allow to cool. Separate the impure cyanate from the lead and extract the cyanate with several small quantities of cold water. Transfer the extract to a beaker, add a concentrated solution of 25 grs. of ammonium sulphate, and evaporate to dryness on a water-bath. Extract the residue by boiling with alcohol under a reflux condenser. Concentrate this extract after filtering, and allow the urea to crystallise.

Urea crystallises in colourless prisms, melting at 132° C. It is very soluble in water.

REACTIONS. 1. To a strong solution of urea, add a drop of conc. nitric acid. A white crystalline precipitate of urea nitrate, $CO : (NH_2)_2 . HNO_3$, is formed.

2. Melt a few crystals of urea in a porcelain dish and heat gently. Bubbles of ammonia are given off, and biuret is formed :

$$2CO : (NH_2)_2 = NH : (CONH_2)_2 + NH_3.$$

Cool, add a few drops of water, a drop of copper sulphate solution, and a few drops of caustic soda. A violet colouration is produced.

3. To a solution of urea, add sodium hypochlorite. Nitrogen is evolved :

$$CO : (NH_2)_2 + 3NaOCl = 2H_2O + CO_2 + N_2.$$

4. To a solution of urea, add a little nitrous acid solution. Nitrogen is evolved :

$$CO : (NH_2)_2 + 2HNO_2 = 3H_2O + CO_2 + 2N_2.$$

The last two reactions provide methods for the quantitative estimation of urea.

Uric Acid.

$C_5H_4N_4O_3$.

Uric acid is a white crystalline powder, almost insoluble in cold water or alcohol, soluble in strong sulphuric acid and repptd. in water. It dissolves in alkalies forming salts.

1. Heated alone, it decomposes into NH_3, HCN, urea, cyanuric acid, ammonium cyanate and carbonate, and some free carbon.

2. Moisten a little uric acid in a porcelain dish with conc. HNO_3 and dry carefully over the flame. A yellow or red residue is obtained. When this (one half of it) is moistened with AmOH, an intense purple colour is produced—ammonium purpurate or murexide, $C_8H_4N_5O_6(NH_4)$. Caustic soda added to the other portion gives a blue colour.

3. A solution of sodium urate also reduces silver nitrate, Fehling's solution on prolonged boiling, and $KMnO_4$.

Caffeine.

(1 : 3 : 7 . Trimethylxanthine) $C_5H(CH_3)_3N_4O_2 + H_2O$.

Caffeine (theine) is closely related to uric acid. It is found in tea and coffee, and may be obtained from these (or from tea dust) by boiling with water, precipitating the tannic acid with lead acetate, removing the excess of lead from the filtrate with sulphuretted hydrogen, and concentrating the liquor. The crystalline deposit obtained on cooling is recrystallised.

It may also be made synthetically in several ways.

Caffeine crystallises in white, glistening, silky needles, subliming about 178°, and melting at 236°·8. It is odourless, slightly soluble in water, and the solutions have a bitter taste.

It is used as a nerve stimulant, alone or in admixture with acetanilide, phenacetin, or as citrated caffeine.

REACTION. Evaporate a solution of a little caffeine in 1-2 c.cs. hydrochloric acid, containing a small crystal of $KClO_3$, to dryness in a small porcelain dish, and invert the dish over a clock-glass containing a few drops of ammonia solution. The residue acquires a deep purple colour, destroyed by caustic alkalies.

GRIGNARD'S REACTION.

135. Metallic magnesium reacts slowly with alkyl or aryl halogen derivatives, forming addition compounds of the type $CH_3 . Mg . I$. These were first examined in detail by Grignard,[1] and are usually called Grignard reagents. He found that in presence of anhydrous ether the reaction is much more vigorous, and the metal dissolves forming a clear colourless liquid. When the ether is distilled off, the magnesium compound remains as a colourless solid, which may contain combined ether in the form

$$CH_3MgI . (C_2H_5)_2O \quad \text{or} \quad CH_3MgI . 2(C_2H_5)_2O.$$

These compounds are comparatively stable, the ether being

[1] *Comptes rendus* (1900), **130**, 1322.

retained at temperatures over 100°, and they react just as the simple compounds do. The latter may be obtained also by the aid of other solvents, as benzene containing a little ether, or a little of a tertiary base, or in dimethylaniline solution. The essential thing is that all the materials, as well as the vessels employed, should be perfectly dry.

The Grignard compounds are very reactive, and are of great value as synthetic agents. Hydrocarbons, alcohols of all classes, aldehydes, ketones, acids, and other types of compounds, may be obtained by the action of Grignard reagents on suitable substances. In the action of alkyl halides on magnesium, in addition to the magnesium alkyl halide, saturated hydrocarbons [1] are formed, in small quantity only among the lower homologues, but forming the chief product among the higher homologues.

1. $CH_3I + Mg = Mg{<}^{CH_3}_{I.}$

2. $2C_nH_{2n+1} . X + Mg = MgX_2 + (C_nH_{2n+1})_2$,

where X is a halogen atom.

The reagents are prepared just before use, owing to the difficulty of preserving them. They are at once decomposed by water, and moisture must be excluded from the atmosphere by placing a calcium chloride tube at the top of the reflux condenser during the preparation.

A. **Grignard Reagent.** Phenyl magnesium bromide or iodide. Some thin magnesium ribbon is well cleaned with fine emery cloth, and broken into pieces 1-2 cm. long. Exactly 2·4 grams of this are placed in a small dish and heated in the air-bath at 110°-120° for an hour to ensure dryness. It is then placed in a 250 c.cs. round flask fitted with a reflux condenser, and mixed with a solution of 15·7 grams brombenzene or 20·4 grams iodobenzene in 50 c.cs. of absolute ether. These materials must be previously dried, the brom- or iodo-benzene by being allowed to stand over calcium chloride all night and then redistilled, and the ether as described in par. **126**. A small crystal of iodine may be

[1] Tissier and Grignard, *Ibid.* (1901), **132**, 835.

added to start the reaction, and the flask may be heated in a water-bath at first. When the reaction begins, much heat is developed, and the water bath is removed, or cooled, the ether being kept gently boiling until, in about two hours, nearly all the magnesium has dissolved. The solution now contains phenyl magnesium bromide or iodide, $C_6H_5 . Mg . Br$, and must be carefully protected from moisture.

B. **Benzoic Acid from Iodobenzene.**[1] Prepare a quantity of phenyl magnesium iodide as just described, and as soon as the magnesium has dissolved remove the condenser and pass a slow stream of dry carbon dioxide (**34**, **22**) for 2-3 hours, keeping the flask cool during this operation. The mixture separates into two layers, an upper layer of ether, and a heavy oily layer containing the complex magnesium compound, $C_6H_5 . CO . O . MgI$. This separation, however, may not occur if the temperature has been too high. In either case, the contents of the flask are now mixed with a little crushed ice, and treated with a cold mixture of 15 c.cs. concentrated hydrochloric acid and an equal volume of water. Benzoic acid is liberated :

$$2C_6H_5 . CO . OMgI \xrightarrow[\text{Water.}]{} (C_6H_5COO)_2Mg + MgI_2.$$

$$(C_6H_5COO)_2Mg + 2HCl = 2C_6H_5 . COOH + MgCl_2.$$

The benzoic acid is extracted with ether, the ether evaporated, and the residue purified by dissolving in sodium or potassium hydroxide, filtering from any undissolved substance, and again precipitating with hydrochloric acid. The yield of the crude acid is 10-12 grams.

Phenylacetic Acid, $C_6H_5 . CH_2 . COOH$, may be prepared in a similar manner from benzyl chloride, using 12·7 grams of the freshly distilled substance in place of the iodobenzene in the previous experiment. When dry carbon dioxide is passed through the ethereal solution of benzyl

[1] Zelinsky, *Ber.* (1902), **35**, 2692.

magnesium chloride, colourless crystals of the composition, $C_6H_5 . CH_2 . CO . OMgCl . (C_2H_5)_2O$, are obtained. This is treated in the same manner as the reaction product already described. Yield about 10 grams.

Phenylacetic acid forms colourless glistening leaflets melting at 76°, and boils without decomposition at 265·5°. It is sparingly soluble in cold water, more readily on heating.

C. **Benzhydrol,** $(C_6H_5)_2CH . OH$, may be taken as an example of the synthesis of a secondary alcohol. It is obtained by the condensation of the phenyl magnesium iodide with benzaldehyde, the product being then decomposed with dilute hydrochloric acid :

$$C_6H_5 . CHO + C_6H_5 . Mg . I = (C_6H_5)_2CH . O . MgI.$$
$$(C_6H_5)_2CH . OMgI + HCl = (C_6H_5)_2 . CH . OH + Mg(I)Cl.$$

A solution of phenyl magnesium iodide is prepared as described in A, and this is slowly added to a solution of 10·6 grams of freshly distilled benzaldehyde in 30 c.cs. of absolute ether. The mixture should be well shaken, and the flask cooled in ice water. A vigorous reaction occurs, and the intermediate compound above separates as a yellowish white precipitate. When all the Grignard compound has been added, the reaction is completed by heating on the water-bath for half an hour. The mixture is then treated with crushed ice and acid as in B, and placed in a separating funnel, from which the aqueous layer is run off and extracted twice with 25 c.cs. of ordinary ether. The extract is added to the original ethereal solution, and the whole is shaken with a dilute solution of sodium bisulphite to remove unchanged benzaldehyde. It is then dried with anhydrous sodium sulphate, and the ether distilled. An oily residue is obtained, which solidifies on cooling. The crystals are dried on a porous plate and recrystallised from ligroin. Yield 12-13 grams.

Benzhydrol forms colourless needles, melting at 68°.

In a similar manner the tertiary alcohol, triphenylcarbinol, may be obtained from the ketone benzophenone, and

primary alcohols by using formaldehyde in the polymeric form of trioxymethylene.

Benzene.

C_6H_6.

136. Benzene can be prepared by heating benzoic acid with lime or caustic soda (compare preparation of methane, **110**) :

$$C_6H_5COONa + NaOH = Na_2CO_3 + C_6H_6.$$

It is separated from the light oil obtained in the distillation of coal tar. Commercial benzene contains thiophene (C_4H_4S), which gives a blue colour when the benzene is shaken with strong sulphuric acid and a small crystal of isatin.

Pure benzene is a colourless mobile liquid, almost insoluble in water, but miscible with alcohol and ether. B. pt. 80·5° C. ; m. pt. 5·4° C. ; sp. gr. ·874 at 20° C. It is very inflammable and burns with a luminous smoky flame. Benzene is a good solvent for fats, pitch, etc., and is used for dry cleaning.

REACTIONS. 1. Warm a little benzene with strong sulphuric acid. The benzene gradually dissolves, forming benzenesulphonic acid :

$$C_6H_6 + H_2SO_4 = C_6H_5SO_3H + H_2SO_4.$$

2. Add a little of a mixture of strong nitric acid and strong sulphuric acid to benzene and warm gently on the water-bath, shaking vigorously : The liquid separates into two layers. The upper layer is nitrobenzene and has an agreeable smell recalling that of benzaldehyde :

$$C_6H_6 + HNO_3 = C_6H_5 . NO_2 + H_2O.$$

Toluene, or methyl benzene, $C_6H_5 . CH_3$, is similar to benzene in general properties. It is a colourless, inflammable liquid, of spec. grav. 0·8708 (13·1/4°). B. pt. 110·3° C.

Benzyl Alcohol.

$C_6H_5CH_2OH$.

137. The hydrogen in benzene and its homologues can be directly replaced by chlorine. By chlorination of hot toluene benzyl chloride, $C_6H_5CH_2Cl$, benzal chloride, $C_6H_5CHCl_2$, and benzotrichloride, $C_6H_5CCl_3$, are successively produced.

When benzyl chloride is boiled with a solution of potassium carbonate, benzyl alcohol is produced and can be obtained from the cold mixture by extraction with ether:

$$2C_6H_5CH_2Cl + K_2CO_3 + H_2O = 2C_6H_5CH_2OH + 2KCl + CO_2.$$

The higher chlorination products correspond similarly with benzaldehyde and benzoic acid :

$$\begin{array}{ccccccc} C_6H_5 . CH_3 & \rightarrow & C_6H_5 . CH_2Cl & \rightarrow & C_6H_5 . CHCl_2 & \rightarrow & C_6H_5 . CCl_3. \\ & & \downarrow & & \downarrow & & \downarrow \\ & & C_6H_5 . CH_2OH & \rightarrow & C_6H_5 . CHO & \rightarrow & C_6H_5 . COOH. \end{array}$$

Benzyl alcohol is a colourless liquid with a faint aromatic smell, and boils at 206° C. It is soluble in water, and in its properties resembles the aliphatic alcohols, but differs widely from the isomeric cresols.

REACTIONS. 1. Warm a little of the alcohol with strong hydrochloric acid. Drops of benzyl chloride form and slowly rise to the surface.

2. Add strong nitric acid carefully to a few drops of benzyl alcohol. Oxidation occurs, and on neutralising the nitric acid, the characteristic smell of benzaldehyde is observed.

Benzaldehyde.

$C_6H_5 . CHO$.

When benzal chloride is boiled with a solution of potassium carbonate, benzaldehyde is produced :

$$C_6H_5CHCl_2 \rightarrow [C_6H_5 . CH(OH)_2] \rightarrow C_6H_5 . CHO.$$

Benzaldehyde is a colourless liquid with a smell like that of bitter almonds; it boils at 179° C. It oxidises rapidly on exposure to air, forming benzoic acid. It has many properties in common with the aliphatic aldehydes, but does not reduce Fehling's solution. It differs also in the products obtained when treated with caustic alkalis, ammonia and potassium cyanide.

Benzoic Acid.

C_6H_5COOH.

Benzoic acid is almost all produced by boiling benzotrichloride with milk of lime:

$$C_6H_5CCl_3 \rightarrow [C_6H_5C(OH)_3] \rightarrow C_6H_5COOH.$$

For pharmaceutical purposes some benzoic acid is still made by the sublimation of gum benzoin.

Benzoic acid crystallises in needles, melting at 122° C. It is only sparingly soluble in cold water, but is soluble in hot water and volatile in steam.

REACTIONS. 1. Heat a little benzoic acid in a dry tube with soda lime. Benzene is produced (p. 120).

2. To a solution of a benzoate, add hydrochloric acid. Benzoic acid is precipitated in colourless, shining leaflets or needles.

3. To a solution of a benzoate add ferric chloride solution. A pale brown precipitate of basic ferric benzoate,

$$(C_6H_5COO)_6Fe_2 \cdot Fe_2O_3 \cdot 15H_2O,$$

is obtained.

4. Heat a little benzoic acid with alcohol and concentrated sulphuric acid; the odour of ethyl benzoate is observed.

Ethyl Benzoate.

$C_6H_5 \cdot COOC_2H_5$.

Dissolve 50 grams of benzoic acid in 100 grams of 95 per cent. alcohol, and through this solution pass a rapid current of hydrogen chloride gas from a Kipp's generator

(32) until the weight of the solution has increased by about 4 grams. (Fischer's esterification method.) The solution is now boiled under reflux for about two hours, until a drop of the liquid removed on a glass rod and mixed with a few drops of water in a test-tube gives no solid benzoic acid, but only the oily ester.

Distil off the alcohol from a water-bath, and shake the cooled residue with sodium carbonate solution until free from acid. Extract the ethyl benzoate with ether, and place the ethereal solution in a dry flask with anhydrous sodium sulphate for some hours. Decant into a dry distilling flask, recover the ether, and then distil the benzoate. The boiling point is 212°. Yield about 45 grams.

Ethyl benzoate is a colourless liquid of sp. gr. 1·05 at 16°, insoluble in water, readily decomposed by alcoholic potash.

Nitrobenzene.

$C_6H_5 . NO_2$.

138. 50 grams of benzene are placed in a 400-500 c.c. flask, and a cold mixture of 100 grams nitric acid of spec. grav. 1·41 with 150 grams concentrated sulphuric acid is slowly added, a few c.cs. at a time, the benzene being vigorously shaken after each addition, and cooled if necessary. Copious red fumes are evolved, and the temperature should not be allowed to rise above 30° during the operation. When all the mixed acid has been added, the flask is heated to about 60° for half-an-hour, with frequent shaking. The nitrobenzene forms the upper layer.

When cold, the contents of the flask are transferred to a separating funnel, the spent acid run off, and the nitrobenzene washed with water, then with sodium carbonate solution, and again with water. The oil is then run off as completely as possible into a dry flask, some dry calcium chloride is added and the mixture allowed to stand overnight. The nitrobenzene should now be quite transparent, and is ready for distillation. This is done by decanting or filtering it into a small distilling flask, which should not

be more than half full, and fitting this to an air-condenser. Heat with a small flame close to the glass. A little water comes over first about 100°, and the temperature then rises rapidly to 200°. Collect between 200° and 208° C.

Nitrobenzene is a colourless, strongly refractive liquid, smelling like bitter almonds. It is poisonous, insoluble in water, but miscible in any proportion with alcohol, ether or benzene. M. pt. + 3° C.; b. pt. 205° C.; D_4^{15} 1·209.

Aniline.

$$C_6H_5 . NH_2.$$

Aniline is manufactured by the reduction of nitrobenzene, and is so prepared in the laboratory:

$$C_6H_5 . NO_2 + 6H = C_6H_5NH_2 + 2H_2O.$$

On the large scale iron borings are used for the reduction, with a small quantity of hydrochloric acid; the ferrous chloride acts as a carrier of oxygen, and a residue of black ferroso-ferric oxide is left. In the laboratory it is more convenient to use tin and hydrochloric acid.

50 grams of nitrobenzene and 90 grams of granulated tin are placed in a round-bottomed litre flask. Concentrated hydrochloric acid is added in small quantities, the mixture being well shaken after each addition, and kept cool by immersing the flask in cold water. A considerable amount of heat is generated, and it is advisable to attach a condenser tube to the mouth of the flask. About 300 c.cs. of acid will be required, and the reaction is over when there is no further development of heat, and the smell of nitrobenzene has disappeared.

The clear liquid is now decanted from any undissolved tin, and made alkaline by adding a strong solution of caustic soda until the precipitated tin hydroxide has just redissolved. The aniline is liberated from its salt, and may be extracted from the cold liquor with ether, or preferably distilled in a current of steam. The apparatus for this

purpose is shown in Fig. 36*a*. A copper or tin flask *a* is used for generating the steam, and is provided with an upright safety tube about two feet long. The flask *b*, containing the aniline mixture, is tilted, to reduce the risk of liquid being blown over into the condenser. The aniline may be separated from the distillate in a separating funnel or by extraction with ether or chloroform. In the latter case the solution may be dried over anhydrous sodium sulphate for several hours, the solvent recovered by distilling from a water-bath, and the remaining aniline then distilled over a small flame.

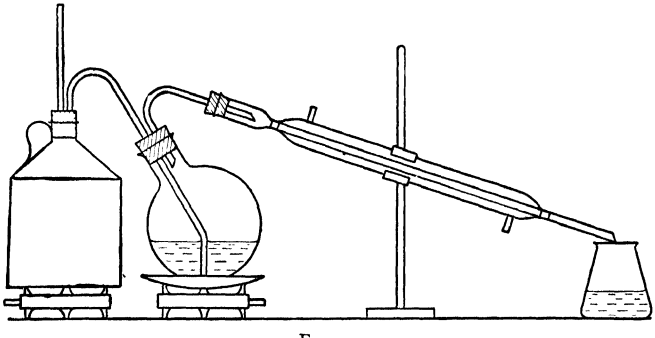

Fig. 39.

Aniline is a colourless, highly refractive liquid, soon turning yellow and brown on standing, especially in air. B. pt. 184° C., spec. grav. 1·026 at 15°. It is only slightly soluble in water, but dissolves readily in most organic solvents. It is a mon-acid base, most of the salts being easily soluble.

REACTIONS. 1. Mix a few drops of aniline on a watch glass with an equal volume of conc. HCl. The hydrochloride, $C_6H_5NH_2 . HCl$, crystallises (aniline salt).

2. Dissolve a little of this in water, and add a few drops of NaOCl or bleaching powder solution. An intense violet colour is produced.

3. To the last test add further a drop of ammonium sulphide. A rose-red colour (detects 1 part aniline in 200,000 of water).

4. Isonitrile reaction. Dissolve one or two drops of aniline and an equal volume of chloroform in 1-2 c.cs. alcohol. Add a small piece of solid KOH or NaOH and warm. Phenylisonitrile is produced and is recognised by its very disagreeable smell.

$$C_6H_5NH_2 + CHCl_3 + 3KOH = C_6H_5NC + 3KCl + 3H_2O,$$

5. To a little aniline add conc. H_2SO_4 and a crystal of $K_2Cr_2O_7$; an intense blue colour is obtained.

6. Diazo-test. Dissolve a drop of aniline in dilute HCl, and add a little $NaNO_2$ solution. Divide into two parts. Boil one part; nitrogen is evolved, and the liquid smells of phenol:

$$C_6H_5N_2Cl + H_2O = C_6H_5OH + N_2 + HCl.$$

Pour the other part into a solution of β-naphthol in NaOH; a bright red ppt. is thrown down (azo-compound).

Acetanilide.

Antifebrin, $C_6H_5 . NH . COCH_3$.

In a 500 c.c. flask place 25 grams of freshly distilled aniline and 150-200 c.cs. water. Add in small quantities, with vigorous shaking, and in the cold, 30 grams acetic anhydride (colourless). Acetanilide is at once obtained in colourless plates:

$$C_6H_5NH_2 + (CH_3CO)_2O = C_6H_5NH . COCH_3 + CH_3COOH.$$

Filter and wash. The substance may be recrystallised from hot water, and melts at 114° C. B. pt. 295° C.

Reactions. 1. Boiled with caustic alkali or strong HCl, it is hydrolysed into its constituents.

2. Bromine added to a glacial acetic acid solution gives *p*-bromacetanilide, which crystallises in colourless needles melting at 165°.

Phenacetin.

Para-acetamino-ethoxybenzene, $C_2H_5O . C_6H_4 . NH . COCH_3$; m. pt. 135°, is somewhat similar to acetanilide in properties, but may be distinguished from it by the fact that a cold saturated solution gives no turbidity with bromine water. It differs also in colour reactions with $FeCl_3$, HNO_2, etc. It is also used as an antipyretic.

Benzamide.

$C_6H_5 . CONH_2$.

Grind 10 grams of ammonium carbonate to fine powder in a mortar, add 10 grams of benzoyl chloride, and mix thoroughly until all action ceases. Benzamide is formed:

$$C_6H_5 . COCl + (NH_4)_2CO_3 = C_6H_5 . CONH_2 + NH_4Cl + CO_2 + H_2O.$$

Add water to remove ammonium salts, filter, wash and crystallise from hot water or a little alcohol. Benzamide crystallises in pearly flakes melting at 130° C.

REACTION. Boiled with NaOH solution, ammonia is liberated. The liquid on acidifying with HCl gives a white ppt. of benzoic acid.

Phenylhydrazine.

$C_6H_5NH . NH_2$.

Phenylhydrazine is obtained by the reduction of diazobenzene salts. It is a nearly colourless liquid, freezing at low temperatures to a crystalline mass melting at 23° C. It is usually employed in the form of salts, such as the hydrochloride or acetate.

REACTIONS. 1. It is used as a reagent for aldehydes, ketones and similar compounds, with which it gives hydrazones:

$$(CH_3)_2CO + H_2N . NHC_6H_5 = (CH_3)_2C : N . NHC_6H_5 + H_2O.$$

With many of the sugars it first yields a hydrazone, which is then changed by a farther reaction, involving oxidation of the adjacent group, into an osazone (see glucose, **116**).

2. Phenylhydrazine reduces Fehling's solution, giving a red precipitate of cuprous oxide. Free nitrogen is liberated, and the hydrocarbon obtained :

$$C_6H_5NH \cdot NH_2 + 2CuO = Cu_2O + C_6H_6 + N_2 + H_2O.$$

Phenol.

(Carbolic Acid, C_6H_5OH).

139. Phenol is obtained from the middle oil of coal-tar distillation and having acidic properties, is removed from the oil by dissolving it out as its sodium salt. It can also be obtained from the sodium salt of benzene sulphonic acid (p. 120) by fusion with caustic soda :

$$C_6H_5SO_3Na + NaOH + C_6H_5ONa + NaHSO_3.$$

Phenol forms colourless crystals; m. pt. 43° C., b. pt. 183° C. On exposure to the air it acquires a light pink colour through oxidation. It has a strong irritant action on the skin, and is a powerful disinfectant. It dissolves readily in water giving an acid solution.

REACTIONS. 1. To a solution of phenol add some bromine water. A white crystalline precipitate of 2 : 4 : 6-tribromphenol is obtained.

2. Ferric chloride solution gives a violet colouration, destroyed by acids.

3. Dissolve a little sodium nitrite in a few c.cs. of conc. sulphuric acid by gently warming and add a small quantity of phenol. A brown colouration, rapidly changing to blue, is produced. Pour the liquid into water; the colour becomes red, changing again to blue on the addition of an alkali (Liebermann's nitroso reaction).

Phenol is used in the manufacture of salicylic acid, picric acid, phenacetin, etc., and as a disinfectant.

Nitration of Phenol.

Phenol is easily nitrated, the nitro-groups being symmetrically disposed in the molecule, like the bromine atoms in tribromphenol. Nitration with dilute acid gives a mixture of the *o*- and *p*-nitroderivatives.

Orthonitrophenol. Dissolve 80 grams of sodium nitrate in 200 c.cs. of water contained in a half-litre flask: mix in slowly 100 grams of conc. H_2SO_4 and cool in running water. To this add in small quantities, with constant stirring, a mixture of 50 grams of phenol and 5 grams of alcohol, melted by warming slightly. The mixture must be well shaken and cooled. It becomes dark-brown in colour, and the nitro-phenols separate as a dark-coloured, viscid mass. Allow to stand for several hours, shaking at intervals, and then, after pouring off the acid liquid as far as possible, distil the oil in a current of steam (Fig. 30). The orthonitrophenol passes over, and solidifies in long yellow needles, melting at 45°. Yield, about 25-30 grams.

Paranitrophenol. The liquid remaining in the flask contains the non-volatile *p*-nitrophenol. Pour this into another flask and heat to boiling. Extract the residue several times with small quantities of boiling water, and add this to the main portion. The whole is then decolourised by boiling with 20 grams of animal charcoal for 20-30 minutes, filtered hot through a fluted filter, concentrated and allowed to cool. The paranitrophenol crystallises in long, almost colourless needles, melting at 114°. Yield, about 8-10 grams.

Picric Acid (2 : 4 : 6-trinitrophenol). Dissolve 10 grams of phenol in 20 grams of concentrated sulphuric acid by warming in a small flask. Phenolsulphonic acid is produced. Add this little by little, when cold, to 50 grams nitric acid (spec. grav. 1·41) in a half-litre flask. Much heat is generated, and abundant red fumes evolved. Heat the mixture on the steam pan for two hours, with frequent shaking. On cooling, picric acid separates as a yellow crystalline solid. Dilute the mixture with 150-200 c.cs. of cold water, filter at the pump, wash with cold water, in which the acid is sparingly soluble, and recrystallise from hot water. Picric acid forms yellow needles, melting at 122·5°. The yield is about 15 grams.

Salicylic Acid.

(*o*-hydroxybenzoic acid) $C_6H_4(OH) . COOH$.

Salicylic acid is prepared by acting on sodium phenate with dry carbon dioxide at ordinary temperatures so long as absorption takes place. Phenyl sodium carbonate is produced :

$$C_6H_5 . ONa + CO_2 = C_6H_5 . O . COONa.$$

This is then heated for several hours in autoclaves to about 140° C. (Kolbe-Schmidt method), and is thus converted into the isomeric sodium salicylate, which remains as a dry powder :

$$C_6H_5 . O . COONa + C_6H_4(OH) . COONa.$$

This is dissolved in water, the acid precipitated with hydrochloric acid, and purified by recrystallisation. It crystallises in colourless needles, melting at 156° C., and is sparingly soluble in cold water, more easily in hot water, and readily soluble in alcohol and ether.

Salicylic acid is a valuable antiseptic, used as a preservative and in medicine.

REACTIONS. 1. Heat a little salicylic acid with soda-lime. Phenol is produced (compare benzoic acid, p. 122).

2. To a solution of the acid add bromine water. A pale yellow precipitate of dibromsalicylic acid is obtained.

3. Ferric chloride gives a red-violet colour with neutral solutions of salts, more violet with the free acid, in alcoholic solution also (distinction from phenol). The colour is destroyed by mineral acids or by acetic acid.

4. Salicylic acid and methyl or ethyl alcohol, heated with a little H_2SO_4, gives the esters, recognisable by their pleasant odours.

Oil of Wintergreen contains the methyl ester, which forms about 90 per cent. of the natural oil. It may be prepared like ethyl benzoate (p. 122) or by heating a mixture of 25 grams methyl alcohol, 25 grams salicylic acid, and 15 grams sulphuric acid for an hour under reflux, and then distilling. It boils at 224° C.

Salol, $C_6H_4(OH)COOC_6H_5$, is phenyl ester, and is obtained in colourless, tasteless crystals, melting at 43° C. It is scarcely soluble in cold water, easily in alcohol or ether, and is used as an internal antiseptic and antirheumatic.

Aspirin is acetyl salicylic acid, $C_6H_4(COOH)O . CO . CH_3$, and may be prepared by boiling with acetic anhydride, or heating the acid with acetyl chloride in sealed tubes to 80-90° C. A crystalline mass is obtained, which is washed with a little cold water and recrystallised from chloroform. It forms fine colourless needles, melting at 135° C., slightly soluble in water. It is largely used as a drug, replacing salicylic acid in the treatment of rheumatism and neuralgia.

Alkaloids.

140. The term alkaloid is applied to certain nitrogenous organic bases of more or less complex constitution, which occur in plants and have well-defined physiological properties. They are usually optically active, insoluble or sparingly soluble in water, soluble in most organic solvents, and give salts which are more or less easily soluble. Some are volatile liquids, and can be steam-distilled from the plant, as nicotine from tobacco: others are crystalline solids that are best extracted by the aid of solvents, as quinine from quinia bark.

The alkaloids are precipitated from solutions of their salts by caustic soda; some, like morphine, redissolve in excess of the alkali. All are precipitated from solution by certain general reagents, as phosphomolybdic acid, phosphotungstic acid, tannic acid, picric acid, $HgI_2 . 2KI$, $BiKI_4$, and iodine in potassium iodide. The compounds so obtained assist by their colour and texture in the identification of the alkaloid.

Quinine.

$C_{20}H_{24}N_2O_2$.

Quinine is a tertiary, di-acid base, crystallising in shining white needles, melting at 177°. It is sparingly soluble

in water, the solution being alkaline to litmus, and lævorotatory.

REACTIONS. 1. Solutions of the sulphate, nitrate, acetate show a blue fluorescence, destroyed by halogen hydrides.

2. NaOH solution precipitates quinine, insoluble in excess.

3. To a solution of the sulphate add chlorine or bromine water, and then ammonia; an emerald green colour is produced, changed to red by acids.

Cinchonine.

$C_{19}H_{22}N_2O$.

Occurs with quinine and other alkaloids in cinchona bark. It is very sparingly soluble in water and in cold alcohol, more soluble in hot alcohol, or in a mixture of this with chloroform. It is dextrorotatory.

The salts are more soluble than the corresponding salts of quinine, and are not fluorescent.

REACTIONS. 1. NaOH or Na_2CO_3 precipitate the base from its salts, insoluble in excess. $NaHCO_3$ gives the same ppt.

2. Cl water gives no colour, but on adding AmOH a yellowish white ppt. is produced.

3. K_4FeCy_6 gives a yellowish flocculent ppt. of the ferrocyanide, soluble on warming gently with excess of the reagent. On cooling, it crystallises in golden-yellow scales, or long needles. These should be examined under the microscope.

Morphine.

$C_{17}H_{19}NO_3$.

This is the principal alkaloid in opium. It crystallises with one molecule of water, which it loses at 120° C., is very sparingly soluble in water, and only slightly in alcohol. Its best solvent in amyl alcohol. The solutions are lævorotatory.

REACTIONS. Use a solution (1-2 per cent.) of the hydrochloride.

1. AmOH ppts. the base, difficulty soluble in excess, but readily soluble in caustic alkalies.

2. Na_2CO_3 or $NaHCO_3$ give the same ppt. insoluble in excess.

3. HNO_3 gives an orange-red colour, which is not changed to violet by sodium thiosulphate (distinction from brucine).

4. $FeCl_3$ gives a blue colour, destroyed by acids or by heat, though it reappears on cooling.

5. Iodic acid gives a brown colour, partly due to free iodine. This may be detected with starch solution.

The last three colour tests may be made with specks of the solid, and a drop of the reagent on a white plate.

Brucine.

$C_{23}H_{28}N_2O_4$.

Brucine is found along with strychnine in various kinds of *strychnos*. It crystallises with four molecules of water, is sparingly soluble in cold water, and has an intensely bitter taste. It is readily soluble in alcohol, and may thus be separated from strychnine, which is insoluble in cold absolute alcohol. Alcohol solutions are lævorotatory.

REACTIONS. 1. NaOH or Na_2CO_3 ppt. brucine from solutions of its salts, insoluble in excess.

2. Conc. HNO_3 gives an intensely red solution, becoming yellow on warming. This may be done by spotting on a white plate. On adding $SnCl_2$ or $Na_2S_2O_3$ to the yellow solution, or rubbing the spot with a crystal of $Na_2S_2O_3$ an intense violet colour is produced (distinction from morphine).

3. Conc. H_2SO_4 gives a pale rose colour, changing slowly to yellow. A trace of HNO_3 stirred into this gives an intense orange-red colour.

4. $Hg_2(NO_3)_2$ free from HNO_3 gives a colourless solution, which on warming develops a fine carmine colour (distinction from strychnine, which gives no colour).

Strychnine.

$C_{21}H_{22}N_2O_2$.

This is found in various species of *strychnos*, together with brucine. It forms colourless rhombic prisms, is

almost insoluble in water and alcohol, alkaline in reaction and of intensely bitter taste. It dissolves easily in chloroform. Most of the salts are soluble in water and alcohol, and are very poisonous.

REACTIONS. 1. Caustic alkali or carbonate precipitate the base, insoluble in excess.

2. AmOH gives the same ppt., which however dissolves in excess and crystallises in needles.

3. $HgCl_2$ gives a white ppt. which dissolves on boiling, but recrystallises in needles on cooling.

4. Dissolved in conc. H_2SO_4 and mixed or rubbed with a fragment of any oxidiser like $K_2Cr_2O_7$, MnO_2, $KMnO_4$, a fine blue-violet colour is produced, which changes to red and then to reddish-yellow. Brucine, morphine or quinine interfere with this reaction.

5. Sulphovanadic acid (Mandelin's reagent) added to a solution in H_2SO_4 gives an intense blue colour, changing to violet and then to red on standing or warming.

C. PHYSICAL MEASUREMENTS.

Determination of Melting Point.

141. The melting point of a substance is that constant temperature at which the solid passes into the liquid form. This temperature is most accurately determined by using a large quantity (at least 20 grs.) of the material, the vessel containing it being heated in a bath the temperature of which is a few degrees higher than that of the melting point required.

For ordinary laboratory purposes the melting point may be found with a sufficient degree of accuracy by placing some of the powdered substance in the closed end of a thin-walled capillary tube, made by drawing out a test-tube to a diameter of 1·5-2 mm. This small tube is then placed alongside of an accurate thermometer, and kept in position by a ring of rubber, cut from narrow rubber tube, and the two together are immersed in a

small beaker or tube of sulphuric acid or glycerin (Fig. 40, *a*). The ring of rubber may even be dispensed with, and the surface tension of the liquid will keep the two tubes in contact. The bath should be stirred by means of a glass stirrer, and very slowly heated over a small flame.

Instead of a beaker, a long wide-necked glass bulb (Fig. 40, *b*) may be used ; and the stirring dispensed with. To secure more uniform heating, the thermometer with capillary may be placed

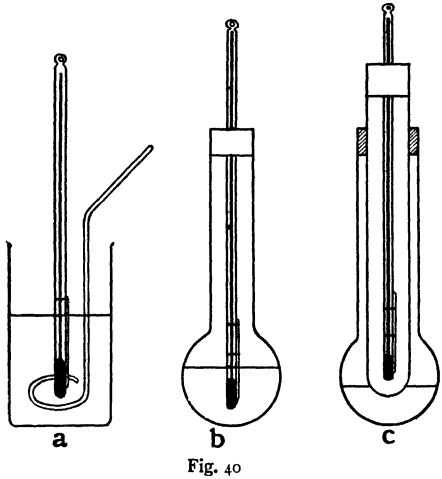

Fig. 40

in a test-tube, which in turn is placed in the acid, which should just touch the bottom of the test-tube (Graebe, Fig. 40, *c*).

The temperature at which melting begins is the true melting-point. This is constant for a pure substance, but is almost always considerably lowered by the presence of impurities.

For the purpose of identifying a substance with a known body, place three capillary tubes in contact with the thermometer, containing respectively the known substance, the unknown, and an intimate mixture of the two. If identical, all three will melt together, even on reheating. If not, the mixture will melt at a lower temperature, in general, than either of the others.

Determination of Boiling Point.

142. The boiling point of a substance is that temperature at which the vapour pressure of the substance is equal to the external pressure upon it. For a pure substance this temperature is constant at any specified pressure, and is in general raised with an increase of the pressure.

When at least 10-20 c.cs. of the liquid are available, the usual method of determining the boiling point is to distil in a small distilling flask, heated by a small flame in contact with

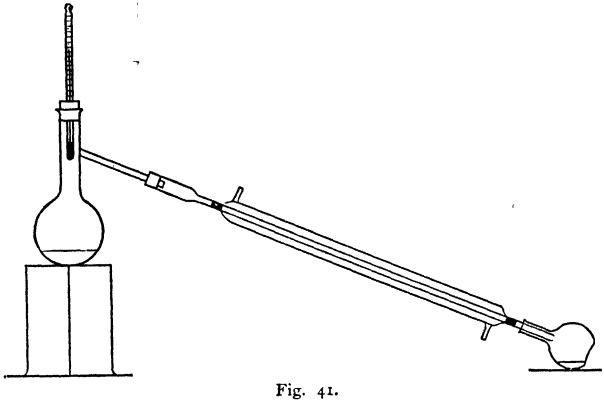

Fig. 41.

the bottom of the flask. To ensure regular boiling, some small pieces of porous clay, or clippings of platinum foil, should be placed in the liquid. The temperature is indicated by a thermometer inserted in the neck, with the bulb just below the side-tube of the flask. The bulb thus becomes coated with a film of the pure liquid in contact with its saturated vapour, and the true boiling point is found. Boiling, however, must be sufficiently rapid to keep the bulb entirely covered with vapour. Short range thermometers, the whole mercury column of which can be immersed in the vapour, are to be preferred. No correction for the emergent column of mercury is then necessary.

Correction of observed boiling point. If the mercury column emerges from the flask, which is generally the case if an

ordinary long-range thermometer is employed, this mercury is at a lower temperature than that in the bulb, and the indication of the thermometer is too low. A correction must therefore be made. This is obtained by finding the mean temperature (t) of the emergent column, by means of a small thermometer lashed to the large one (Fig. 42), so that its bulb is half way up the emergent column. Then

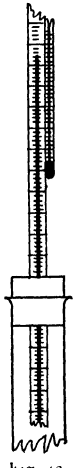

Fig. 42.

$$\text{Correction} = 0{\cdot}000153(T - t)N^\circ \text{ C.},$$

where T is the observed boiling point, t the mean temperature of the cooled column, and N the number of degrees in the cooled column.

To obtain the boiling point under standard pressure the necessary correction is given by the expression

$$dt = \frac{T \cdot dp}{9120},$$

where T is the observed boiling point on the absolute scale, and dp the difference between the observed and standard pressures.

143. When the quantity of liquid available is too small to allow of a boiling point determination by the above method, others may be used. In the method of Chapman Jones[1] a bent tube (Fig. 43) contains a small quantity of the liquid, which is conveyed to the closed end of the inverted tube, and the open end is then placed under mercury in a small dish. The whole is now introduced in this position into the bath, which is then heated to the boiling point of the liquid. The vapour of the liquid expels all the air, and on cooling, mercury enters the tube. If any air bubbles remain, the operation is repeated. The tube is then carefully removed, the liquid made to occupy the closed end, and some mercury ejected until the mercury level is lower in the open than in the closed limb. The tube is then heated slowly in the bath, in the position shown, until the mercury stands at the same level in both limbs. Since the vapour pressure of the liquid must now equal the atmospheric pressure, the temperature of the bath is the boiling point of the liquid.

[1] *Trans. Chem. Soc.* 1878, 175.

Several observations should be made, with both rising and falling temperature. The quantity of liquid used must be sufficient to leave some unvaporised, that is, the vapour must be saturated.

144. The method of Siwoloboff[1] gives the approximate boiling point with even one drop of the liquid. A narrow glass tube (Fig. 44) is sealed at one end, the liquid introduced, and a capillary tube, sealed about 1 cm. from the lower end, is placed in it. The tube is then fastened to a thermometer, so that the bulb is at the level of the liquid, and heated in a bath. Air

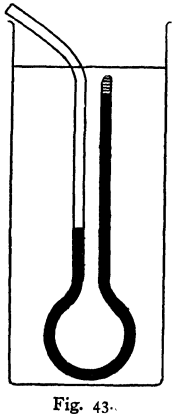

Fig. 43.

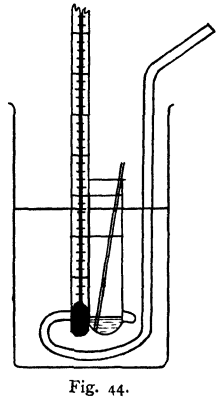

Fig. 44.

bubbles escape from the lower end of the capillary, and these become more numerous as the temperature rises. When the boiling point is reached, a rapid stream of small bubbles of vapour is emitted from the liquid. Several observations should be made, each with a fresh capillary, and the mean taken.

Determination of Specific Gravity.

145. For the determination of this constant, some form of pyknometer or specific gravity tube is employed. The ordinary

[1] *Berichte*, 19, 795 (1886).

specific gravity bottle with perforated stopper may be used, but for accurate work a more exact instrument should be employed.

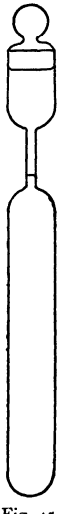

Fig. 45.

A convenient form is that shown in Fig. 45. It consists of a glass tube, with narrow neck made from thermometer tubing, and a ground-in stopper. The neck has one or more marks etched round it. To use the instrument, it is filled with distilled water, suspended by a platinum wire in a beaker of finely crushed ice and water so as to give a temperature of 0° C., and left for an hour. The water level is then adjusted to one of the marks by means of a fine capillary, the tube removed, carefully dried and allowed to stand in the balance room for half an hour before weighing. Deducting the weight of the empty tube, the weight of the water is found. The dry tube is now filled with the liquid to be examined, placed in the bath for an hour and the volume adjusted as before. It is customary to determine the constant also at another temperature, 15° or 20°. The tube, after weighing with the liquid, is placed in a bath at the required temperature and some of the liquid removed.

Another form of pyknometer very commonly used is Perkin's modification (Fig 46) of the Sprengel tube. This consists of a U-tube, the ends of the two limbs being connected to capillary tubes which are bent at 135° with them, and which are therefore at right angles to each other. On one of the capillaries is a small bulb, and a mark etched between this and the upper end of the limb. The ends of the capillaries are furnished with ground-on caps. The instrument is filled by dipping the plain capillary in the liquid, and applying suction at the

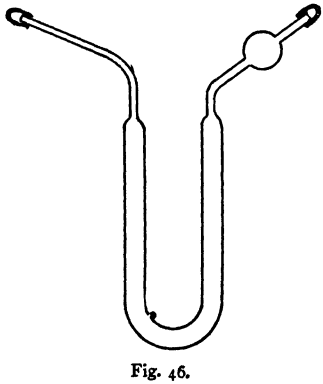

Fig. 46.

other, until the bulb is half filled. It is then placed in the ice bath, and after an hour (with caps on) the volume is adjusted by tilting the tube so that the plain capillary is horizontal, the other being vertical, and withdrawing liquid by means of filter paper placed in contact with the end of the capillary, until the liquid in the bulbed capillary has fallen exactly to the mark. Then replace the caps, dry the tube carefully and weigh after standing in the balance room for half an hour.

From the weight of water at 0° C., the weight at 4° C. should be calculated, and the density referred to this. For example, for alcohol

$D^0/_4 = 0{\cdot}806$; $D^{20}/_4 = 0{\cdot}789$.

Determination of Vapour Density.

146. This forms a ready method for the determination of the molecular weight of a substance, and is easily found, correct to within 5 per cent., by Victor Meyer's method.

A glass tube with cylindrical bulb *A* (Fig. 47) of at least 100 c.cs. capacity is furnished near the top with a capillary delivery tube and a short side tube through which a glass rod moves in a rubber fastener. The tube is supported in a wider tube *B*, in which a liquid is boiled, the vapour from which heats *A*. The boiling point of the liquid in *B* should be at least 20-30° above that of the substance to be examined. The bottom of *A* is covered with dry sand or asbestos, to break the fall of

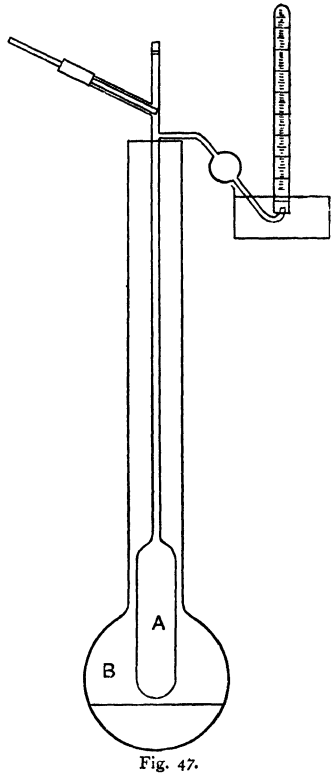

Fig. 47.

the small weighed tube, and the bath is then heated to the required temperature until no more air bubbles escape from the delivery tube. The substance is weighed in a small stoppered tube or bulb, and placed in the upper end of A, resting on the glass rod, and A then closed. When all is ready, the glass rod is withdrawn to allow the substance to drop, and at once replaced. Vaporisation should take place rapidly, and the expelled air is collected in a graduated tube placed over the end of the capillary. If this occupies too much time, diffusion of the vapour into the upper part of A will affect the result. When no more air is expelled, remove the measuring tube to a tall cylinder filled with water, allow it to stand in water 15 minutes, and then take the temperature of the water and the volume of the air, first adjusting the level of water in the tube to that in the cylinder. In making this adjustment, do not touch the tube with the fingers.

Calculation of the vapour density.

Let W = weight of substance used.

" V = volume of air collected.

" t = temperature of this air.

" p = barometric pressure.

" a = vapour pressure of water at $t°$.

Then the vapour density of the substance referred to hydrogen as unity is

$$D=\frac{W(273+t)760}{V(p-a)273\times 0{\cdot}0000896}.$$

The molecular weight, referred to that of hydrogen as 2, is twice the vapour density.

Determination of Molecular Weights of Organic Acids.

147. The sodium and potassium salts of the simple organic acids are destroyed by ignition, leaving the carbonate of the metal. From the weight of this, the molecular weight of the acid may be deduced, but in many cases the carbon set free during the ignition is difficult to burn away completely. It is better to use the silver salt, which leaves a residue of metallic

silver. A weighed quantity (W) of the dry salt is heated in a porcelain crucible, and the residue (R) is weighed. The loss in weight represents the radical of the acid, and the equivalent weight of the acid is therefore

$$E = \left\{ \frac{107 \cdot 93(W - R)}{R} \right\} + 1.$$

If the equivalent weight is multiplied by the basicity of the acid, the molecular weight will be found.

For the sulphate method of determining the molecular weights of organic or volatile acids, see par. **320**.

For the determination of Equivalents, see pars. **228-232**.

Avogadro's Hypothesis.

Under the same conditions of temperature and pressure, equal volumes of gases contain equal numbers of molecules.

This generalisation, like the pressure-volume law of Boyle, and the temperature-volume law of Gay-Lussac, applies to all gases within certain limits, namely under conditions of temperature and pressure remote from those pertaining on the one hand to the liquid state, or on the other to the dissociation of the gas molecules. All three laws apply, with corresponding reservations, to dilute solutions, the pressure in this case being the osmotic pressure of the dissolved substance.

The constancy of the gram-molecular volume of gases may be illustrated in the following simple manner. One gram of marble, which contains $\frac{1}{100}$ of a gram-molecule of CO_2, is dissolved in dilute HCl, and the liberated gas collected over saturated salt solution, in order to minimise loss. The volume is measured. The apparatus used for determining equivalents (pars. **228-232**) may be employed. Similarly, 0·65 gram of zinc, which displaces $\frac{1}{100}$ of a gram-molecule of hydrogen, is dissolved. The two gas-volumes will be practically equal.

The gram-molecular volume may be taken as 22,410 c.c., which is the mean of the values for H_2, O_2 and N_2; these values differ slightly, since the gas laws are not absolutely true.

SECTION II.

QUALITATIVE ANALYSIS.

INSTRUCTIONS TO STUDENTS.

In the section on Qualitative Analysis those reactions of the metals and acids having no bearing on the subsequent analysis have been omitted. The principal product or products of the reactions are given, but the equations, except the more difficult, have been left to be entered by the student.

Reference should be made to the table in par. **201**, which indicates the solubilities of the principal salts of the metals, in order to obtain a clear understanding of the reactions on which the analysis depends. From the reactions given, other methods of separation should also be devised by the student.

In the analysis of a salt, before commencing the separation of the metals into groups, the student should carry out the dry reactions given, but these should not occupy more than ten minutes. From these tests he will obtain indications of the presence or absence of many of the metals, and may thus save much labour in the subsequent operations.

The detection of the acids should follow that of the metals, and as there is here no definite separation into groups, the student, after applying the preliminary tests, should write in his notes a list of those acids which have not been definitely shown to be absent, and then proceed to test for each separately.

At the end of an analysis the properties of the substance given should be written in a column, and opposite these the properties of the substances found which may account for them.

In this way the student will in many cases be able to ascertain the individual salts present, and not only the metals and acids separately.

The student should not omit to record any observation because at the time it does not convey any information to him.

REACTIONS OF THE METALS.

THE SILVER GROUP.

Metals whose chlorides are insoluble in water (Note, lead chloride is slightly soluble in cold water, much more readily in hot water).

Lead.

Pb, 207·1.

148. DRY REACTION.

Heated on charcoal, lead compounds are readily reduced to the metal, which is soft, malleable, and easily marks paper.

REACTIONS IN SOLUTION. Use a solution of lead acetate or nitrate, $(CH_3COO)_2Pb$ or $Pb(NO_3)_2$.

1. **Hydrochloric acid** gives a white precipitate of lead chloride, $PbCl_2$, soluble in hot water, crystallising in white needles on cooling.

2. **Sulphuretted hydrogen** produces a black precipitate of lead sulphide, PbS, converted by boiling with dilute nitric acid into nitrate and sulphate. In strongly acid solutions the precipitate is first reddish brown, $x PbCl_2 . y PbS$.

3. **Sulphuric acid** precipitates white lead sulphate, $PbSO_4$, slightly soluble in water, insoluble in 50 per cent. alcohol. It is soluble in a solution of ammonium acetate or tartrate, or in strong potassium hydrate or hydrochloric acid.

4. **Sodium hydrate** produces a white precipitate of lead hydrate, $Pb(OH)_2$, soluble in excess forming sodium plumbite, $Pb(ONa)_2$.

5. **Potassium iodide** gives a yellow crystalline precipitate of lead iodide, PbI_2, soluble in hot water, and recrystallising in shining yellow plates.

6. **Potassium chromate** precipitates yellow lead chromate, $PbCrO_4$, soluble in dilute nitric acid but not in acetic.

7. **Sodium carbonate** forms a white precipitate of basic lead carbonate.

Silver.

Ag, 107·88.

149. DRY REACTION.

Heated on charcoal, silver compounds are readily reduced to the metal, which may be obtained as a bead at a high temperature. The bead is bright, white and hard.

REACTIONS IN SOLUTION. Use a solution of silver nitrate, $AgNO_3$.

1. **Hydrochloric acid** gives a white precipitate of silver chloride, AgCl, readily soluble in ammonium hydrate, and insoluble in nitric acid.

2. **Sulphuretted hydrogen** precipitates black silver sulphide, Ag_2S, soluble in hot nitric acid.

3. **Sodium hydrate** produces a dark grey precipitate of silver oxide, Ag_2O, readily soluble in ammonia, giving silver ammonium hydrate, NH_3AgOH.

4. **Potassium chromate** gives a brick-red precipitate of silver chromate, Ag_2CrO_4, readily soluble in dilute nitric acid, decomposed by solutions of alkali chlorides into silver chloride and a soluble chromate (see use as indicator, par. **264**).

5. **Sodium carbonate** gives a white precipitate of silver carbonate.

Mercury.

Hg, 200.

150. DRY REACTION.

Many mercury salts volatilise unchanged on heating, while others decompose, so that when heated in a dry tube they may give a white sublimate, $HgCl_2$, a yellow sublimate, HgI_2, or a sublimate of metallic mercury, HgO, $Hg(NO_3)_2$, etc. If heated with sodium carbonate, all mercury salts yield metallic mercury.

REACTIONS IN SOLUTION.

Mercurous compounds. Use a solution of mercurous nitrate, $HgNO_3$.

1. **Hydrochloric acid** precipitates white mercurous chloride, HgCl (calomel), soluble in aqua regia. It is turned black by ammonia forming mercurous ammonium chloride, NH_2Hg_2Cl.

$$2HgCl + 2NH_3 = NH_2Hg_2Cl + NH_4Cl.$$

2. **Sodium hydrate** gives a black precipitate of mercurous oxide, Hg_2O.

3. **Ammonium hydrate** produces a black precipitate of mercurous ammonium nitrate, $NH_2Hg_2NO_3$.

$$2HgNO_3 + 2NH_4OH = NH_2Hg_2NO_3 + NH_4NO_3 + 2H_2O.$$

4. **Sodium carbonate** precipitates mercurous oxide.

5. **Potassium chromate** gives a dark-red precipitate of mercurous chromate, Hg_2CrO_4, which decomposes on ignition, leaving chromium sesquioxide, Cr_2O_3.

OXIDATION OF MERCUROUS SALTS.

Mercurous salts are easily oxidised to mercuric salts, *e.g.* mercurous chloride dissolves in chlorine water or aqua regia, forming the soluble mercuric chloride, $HgCl_2$. Mercurous salts are readily reduced to mercury by stannous chloride, which is oxidised to stannic chloride.

$$2HgNO_3 + SnCl_2 + 2HCl = 2Hg + SnCl_4 + 2HNO_3.$$

SEPARATION OF THE METALS OF THE SILVER GROUP.

151. The separation and detection of the metals of this group depend upon :

(*a*) The solubility of lead chloride in hot water, silver and mercurous chlorides being insoluble ;

(*b*) The solubility of silver chloride in ammonium hydrate, mercurous chloride being insoluble.

(*c*) The formation of the black compound of mercurous chloride with ammonia.

THE COPPER GROUP.

Metals whose sulphides are insoluble in cold dilute acids.

Mercury.

Hg.

152. Mercuric Compounds. DRY REACTIONS. (See mercurous compounds.)

REACTIONS IN SOLUTION. Use a solution of mercuric nitrate $Hg(NO_3)_2$, or chloride, $HgCl_2$.

To a portion of the solution add hydrochloric acid ; note the result. Repeat this procedure with the other metals of the group.

1. **Sulphuretted hydrogen** produces a black precipitate of mercuric sulphide, HgS, insoluble in nitric or hydrochloric acid, but readily soluble in aqua regia. It is converted by nitric acid to a white substance, $Hg(NO_3)_2 . HgS$. In strongly acid solutions of mercuric salts the precipitate is first white, then yellow, reddish brown, and finally black, owing to the formation of compounds of the mercuric salt and mercuric sulphide, $xHgCl_2 . yHgS$.

2. **Sodium hydrate** precipitates yellow mercuric oxide, HgO.

3. **Ammonium hydrate** gives a white precipitate of mercuric ammonium chloride, NH_2HgCl.

4. **Potassium iodide** produces a bright red precipitate of mercuric iodide, HgI_2, soluble in excess of potassium iodide or of mercuric chloride.

5. **Stannous chloride** gives a white precipitate of mercurous chloride, and by further reduction, grey metallic mercury.

6. **Sodium carbonate** precipitates mercuric oxide.

7. A piece of bright **copper** placed in an acidified solution of a mercury salt becomes coated with a grey deposit of mercury, which on rubbing acquires a bright surface.

Bismuth.

Bi, 208·0.

153. DRY REACTIONS.

1. Heated in a dry tube bismuth salts are decomposed, leaving the oxide, which is orange red while hot, pale yellow on cooling.

2. Heated on charcoal bismuth compounds are easily reduced to metal, which has a slight red tinge and is brittle. A yellow incrustation of the oxide is also formed.

REACTIONS IN SOLUTION. Use a solution of bismuth nitrate, $Bi(NO_3)_3$, or bismuth chloride, $BiCl_3$. Test as before with hydrochloric acid.

1. **Sulphuretted hydrogen** gives a dark brown precipitate of the sulphide, Bi_2S_3, soluble in nitric acid.

2. **Ammonium hydroxide** precipitates white bismuth hydroxide, $Bi(OH)_3$, insoluble in excess. The precipitate is turned black by a solution of sodium stannite (158, 3).

3. Excess of **water** causes precipitation of a white oxysalt (as BiOCl).

4. **Sodium carbonate** gives a white precipitate of basic carbonate.

Copper.

Cu, 63·57.

154. DRY REACTIONS.

1. Heated on charcoal, copper salts leave a black residue of copper oxide, CuO, which may be reduced, especially with fusion mixture and potassium cyanide in the reducing flame, to red scales of copper.

Potassium cyanide acts as a reducing agent, uniting with oxygen to form potassium cyanate.

$$KCN + O = KCNO.$$

2. Moistened with hydrochloric acid and heated on platinum wire, copper compounds colour the flame blue. If not present as the halogen compounds, the flame is green.

3. Heated in a borax bead in the oxidising flame, the bead is green while hot, blue on cooling. In the reducing flame a red bead containing small particles of copper is obtained.

REACTIONS IN SOLUTION. Use a solution of copper sulphate $CuSO_4 . 5H_2O$.

Test with hydrochloric acid.

1. **Sulphuretted hydrogen** produces a black precipitate of cupric sulphide, CuS, soluble in nitric acid and in potassium cyanide.

2. **Ammonium hydrate** precipitates a bluish green basic salt, $CuSO_4 . Cu(OH)_2$, which dissolves in excess, forming a deep blue solution containing the compound $CuSO_4 . 4NH_3 . H_2O$. This blue colour is destroyed by potassium cyanide.

3. **Sodium hydrate** gives a light blue precipitate of hydrate, $Cu(OH)_2$, insoluble in excess. It turns black on heating, giving hydrated copper oxide, $2CuO . H_2O$.

4. **Potassium ferrocyanide** produces a reddish brown precipitate of cupric ferrocyanide, $Cu_2Fe(CN)_6$.

5. **Sodium carbonate** precipitates a green basic carbonate.

Cadmium.

Cd, 112·4.

155. DRY REACTION.

Heated on charcoal, cadmium compounds give a brown incrustation of the oxide, CdO.

REACTIONS IN SOLUTION. Use a solution of cadmium chloride, $CdCl_2$, or sulphate, $CdSO_4$.

Test with hydrochloric acid.

1. **Sulphuretted hydrogen** gives a yellow precipitate of cadmium sulphide, CdS, soluble in dilute mineral acids, and therefore not precipitated in strongly acid solutions.

2. **Ammonium hydrate** precipitates white cadmium hydrate, $Cd(OH)_2$, soluble in excess, insoluble in sodium hydrate (distinction from zinc).

3. **Sodium carbonate** produces a white precipitate of cadmium carbonate, $CdCO_3$.

4. **Potassium cyanide** first precipitates a white cyanide, which dissolves in excess, forming the double salt

$$2KCN . Cd(CN)_2.$$

From this solution sulphuretted hydrogen precipitates the sulphide (distinction from copper).

Arsenic.

As, 75.

156. DRY REACTIONS.

1. Heated in a dry tube, arsenic compounds volatilise, giving a sublimate. If mixed with fusion mixture and potassium cyanide and heated, a sublimate of arsenic is formed.

2. Heated on charcoal, arsenic compounds partly sublime and are partly reduced, giving arsenic, which then burns to the oxide. Some of the vapour of arsenic is, however, mixed with the oxide, and may be recognised by its garlic odour.

REACTIONS IN SOLUTION.

Arsenious compounds. Use a solution of sodium arsenite, Na_3AsO_3.

Test with hydrochloric acid.

1. **Sulphuretted hydrogen** gives in acid solutions a yellow precipitate of arsenic trisulphide, As_2S_3, insoluble in strong hydrochloric acid, but soluble in ammonium sulphide, forming ammonium thioarsenite, or in ammonium carbonate.

$$As_2S_3 + 3(NH_4)_2S = 2(NH_4)_3AsS_3.$$

With yellow ammonium sulphide, thioarsenate is produced.

$$As_2S_3 + 3(NH_4)_2S + S_2 = 2(NH_4)_3AsS_4.$$

It is also soluble in sodium hydrate, forming a mixture of arsenite and thioarsenite.

$$As_2S_3 + 6NaOH = Na_3AsS_3 + Na_3AsO_3 + 3H_2O.$$

From these solutions the trisulphide or pentasulphide is precipitated by hydrochloric acid.

$$2(NH_4)_3AsS_3 + 6HCl = As_2S_3 + 6NH_4Cl + 3H_2S.$$
$$2(NH_4)_3AsS_4 + 6HCl = As_2S_5 + 6NH_4Cl + 3H_2S.$$
$$Na_3AsS_3 + Na_3AsO_3 + 6HCl = As_2S_3 + 6NaCl + 3H_2O.$$

2. **Silver nitrate** produces from neutral solutions a yellow precipitate of silver arsenite, Ag_3AsO_3, soluble in ammonium hydrate or nitric acid.

3. **Copper sulphate** precipitates Scheele's green, $CuHAsO_3$, soluble in ammonium hydrate, ammonium chloride, or in dilute nitric acid.

Arsenic compounds. Use a solution of sodium arsenate, $Na_2HAsO_4 . 12H_2O$.

1. **Sulphuretted hydrogen** slowly precipitates arsenic pentasulphide, at the same time reducing some of the arsenate to arsenite, and from this precipitating arsenic trisulphide. The precipitation may be hastened by using a hot, strongly acid solution, or better, by first reducing the arsenate with sulphur dioxide, boiling off excess of the dioxide before passing sulphuretted hydrogen.

The pentasulphide is soluble in ammonium sulphide, forming thioarsenate, and in sodium hydrate forming arsenate and thioarsenate.

2. **Silver nitrate** gives a reddish-brown precipitate of silver arsenate, Ag_3AsO_4, soluble in ammonium hydrate or nitric acid.

3. **Copper sulphate** produces a pale greenish-blue precipitate of cupric hydrogen arsenate, $CuHAsO_4$, soluble in ammonium hydrate or nitric acid.

4. **Magnesia mixture** (magnesium sulphate in presence of ammonium chloride and ammonium hydrate) gives a white crystalline precipitate of magnesium ammonium arsenate, $MgNH_4AsO_46H_2O$, soluble in acids. When heated in oxygen, this leaves a residue of magnesium pyroarsenate, $Mg_2As_2O_7$.

5. **Ammonium molybdate** produces, when heated, a yellow precipitate of ammonium arsenomolybdate, $(NH_4)_3AsO_4 . 11MoO_3 . 6H_2O$.

Antimony.

Sb, 120·2.

157. Dry Reactions.

Heated on charcoal, antimony compounds give a white incrustation. The metal may be obtained, but rapidly burns.

Reactions in Solution.

Antimonious compounds. Use a solution of antimony trichloride, or of tartar emetic.

Test with hydrochloric acid.

1. **Sulphuretted hydrogen** produces, in acid solutions, an orange precipitate of the sulphide, Sb_2S_3, soluble in ammonium sulphide, and in sodium hydrate forming thio- and oxy-salts, the sulphide being reprecipitated by hydrochloric acid. The reactions are similar to those of arsenic. Antimony trisulphide is soluble in warm concentrated hydrochloric acid.

2. Excess of **water** causes precipitation of the white oxychloride, SbOCl, soluble in solutions of tartaric acid or tartrates (distinction from BiOCl).

3. **Silver nitrate** gives, with alkaline solutions, a black precipitate of silver oxide and silver.

4. **Sodium hydrate** or carbonate forms a white precipitate of antimonious oxide, Sb_4O_6, soluble in excess of the former, producing sodium metantimonite.

$$4SbCl_3 + 12NaOH = Sb_4O_6 + 12NaCl + 6H_2O.$$
$$Sb_4O_6 + 4NaOH = 4NaSbO_2 + 2H_2O.$$

5. If, in a solution of an antimony salt, a piece of zinc be placed in contact with a piece of platinum foil, the antimony will be deposited on the platinum as a brown stain.

Antimonic compounds. Use a solution of potassium metantimonate, $KSbO_3$.

1. **Sulphuretted hydrogen** produces, in an acidified solution, an orange-red precipitate, consisting of the pentasulphide, the trisulphide and sulphur. The pentasulphide dissolves in ammonium sulphide, forming thioantimonate, $(NH_4)_3SbS_4$. It is also soluble in sodium hydrate, forming a mixture of sodium antimonate, thioantimonate, and hydrosulphide.

2. **Silver nitrate** gives a white precipitate of silver antimonate, Ag_3SbO_4.

3. **Hydrochloric acid** precipitates white metantimonic acid, $HSbO_3$, soluble in excess; from this solution **sodium carbonate** reprecipitates $HSbO_3$.

Tin.

Sn, 119.

158. Dry Reaction.

Heated on charcoal, the metal is obtained with difficulty, a white incrustation being generally formed.

Reactions in Solution.

Stannous salts. Use a solution of stannous chloride, $SnCl_2$.

Test with hydrochloric acid.

1. **Sulphuretted hydrogen** precipitates dark-brown stannous sulphide, SnS, soluble in *yellow* ammonium sulphide, forming thiostannate, and in sodium hydrate forming stannite and thiostannite.

$$SnS + (NH_4)_2S + S = (NH_4)_2SnS_3.$$

$$2SnS + 4NaOH = Na_2SnS_2 + Na_2SnO_2 + 2H_2O.$$

Stannous sulphide is precipitated from the latter solution by hydrochloric acid, while the former yields yellow stannic sulphide, SnS_2.

$$Na_2SnS_2 + Na_2SnO_2 + 4HCl = 2SnS + 4NaCl + 2H_2O.$$

$$(NH_4)_2SnS_3 + 2HCl = SnS_2 + 2NH_4Cl + H_2S.$$

Stannous sulphide is also soluble in hot strong hydrochloric acid, in oxalic acid, and in tartaric acid.

2. **Mercuric chloride** is reduced by stannous salts, giving mercurous chloride, and finally mercury.

3. **Sodium hydrate** gives a white precipitate of stannous hydroxide, $Sn(OH)_2$, which dissolves in excess, forming sodium stannite.

Stannic salts. Use a solution of stannic chloride, $SnCl_4$.

1. **Sulphuretted hydrogen** gives a yellow precipitate of stannic sulphide, SnS_2, soluble in ammonium sulphide, producing thiostannate, and in sodium hydrate giving stannate and thiostannate. From these solutions hydrochloric acid precipitates the stannic sulphide. The sulphide is also soluble in hot, strong hydrochloric acid.

2. **Sodium hydrate** precipitates white stannic acid, H_2SnO_3, which is converted by excess of soda into soluble sodium stannite, Na_2SnO_2.

3. In test **157**, 5 for antimony, any tin which is present will be displaced from the solution by the zinc. It may then be detected by dissolving in hydrochloric acid and adding mercuric chloride. This gives a means of separating antimony from tin.

SEPARATION OF THE METALS OF THE COPPER GROUP.

159. In the detection of the metals in this group a division is first effected by the solution of the sulphides of arsenic, antimony and tin in yellow ammonium sulphide or sodium hydrate. These three metals form a sub-group.

The detection of metals in the sub-group depends upon

(*a*) the reprecipitation of the sulphides from solution by hydrochloric acid,

(*b*) the solution of tin and antimony sulphides in strong hydrochloric acid, arsenic sulphide being insoluble,

(*c*) the solubility of tin sulphide in oxalic acid, antimony sulphide being insoluble.

The detection of the metals in the main group depends upon

(*a*) the solubility of the sulphides of lead, bismuth, copper and cadmium in nitric acid, mercuric sulphide being insoluble,

(*b*) the insolubility of bismuth hydrate in ammonium hydrate, copper and cadmium hydrates being soluble,

(*c*) the solubility of copper sulphide in potassium cyanide, cadmium sulphide being insoluble.

THE IRON GROUP.

Metals whose hydrates are insoluble in solutions of ammonium salts.

Iron.

Fe, 55·85.

160. DRY REACTIONS.

1. Heated on charcoal, iron compounds leave a black magnetic residue.

2. Heated in a borax bead in the oxidising flame, iron compounds give a red bead while hot, yellow on cooling. In the reducing flame the bead is bottle green.

REACTIONS IN SOLUTION. **Ferrous Salts.** Use a solution of ferrous sulphate, $FeSO_4 . 7H_2O$.

1. To a portion of the solution add dilute hydrochloric acid and pass sulphuretted hydrogen. Boil off the sulphuretted hydrogen or take a fresh portion of the solution and add ammonium chloride and **ammonium hydrate.** When the latter is added incomplete precipitation of ferrous hydrate occurs. This precipitate is at first dirty white, changing to pale green, grey, and finally brown, owing to oxidation to ferric hydrate, $Fe(OH)_3$.

2. **Sodium hydrate** gives a similar precipitate.

3. **Ammonium sulphide** precipitates black ferrous sulphide, FeS, soluble in dilute acids.

4. **Sodium carbonate** gives a white precipitate of ferrous carbonate, $FeCO_3$, which rapidly oxidises.

5. **Potassium ferrocyanide** forms a white precipitate of potassium ferrous ferrocyanide, $K_2Fe[Fe(CN)_6]$, which rapidly turns blue through oxidation. Owing to this rapid oxidation the precipitate produced in the ordinary way is never white.

$$K_4Fe(CN)_6 + FeSO_4 = K_2Fe[Fe(CN)_6] + K_2SO_4.$$

6. **Potassium ferricyanide** forms a deep blue precipitate of ferrous ferricyanide (Turnbull's blue).

$$2K_3Fe(CN)_6 + 3FeSO_4 = Fe_3[Fe(CN)_6]_2 + 3K_2SO_4.$$

See the use of potassium ferricyanide as indicator in volumetric work (par. **260**).

Ferric salts. Use a solution of ferric chloride, $FeCl_3$.

1. To a portion of the solution add hydrochloric acid and then pass sulphuretted hydrogen. Note the change in colour and the precipitate of sulphur. The ferric salt has been reduced to a ferrous salt,

$$2FeCl_3 + H_2S = 2FeCl_2 + 2HCl + S.$$

Boil off the sulphuretted hydrogen, add two or three drops of concentrated nitric acid, boil and add ammonium chloride and **ammonium hydrate.** A brown precipitate of ferric hydrate is obtained, the nitric acid having reoxidised the ferrous to ferric salt.

$$6FeCl_2 + 6HCl + 2HNO_3 = 6FeCl_3 + 4H_2O + 2NO.$$

In analytical work the ferrous salts must always be oxidised to ferric, as the former are not completely precipitated by ammonium hydrate.

Ferric hydrate is soluble in hydrochloric acid, insoluble in sodium hydrate. When heated alone it leaves the oxide Fe_2O_3 which is unaffected by fusion with fusion mixture and potassium nitrate.

2. **Sodium hydrate** gives a precipitate of ferric hydrate, insoluble in excess of the reagent.

3. **Sodium carbonate** produces the same precipitate with evolution of carbon dioxide.

4. **Ammonium sulphide** gives a black precipitate of ferrous sulphide, sulphur also being precipitated.

$$2FeCl_3 + 3(NH_4)_2S = 2FeS + 6NH_4Cl + S.$$

5. **Potassium ferrocyanide** precipitates deep blue ferric ferrocyanide (Prussian blue), $Fe_4[Fe(CN)_6]_3$, insoluble in hydrochloric acid but decomposed by caustic alkalies,

$$Fe_4[Fe(CN)_6]_3 + 12KOH = 4Fe(OH)_3 + 3K_4Fe(CN)_6.$$

6. **Potassium ferricyanide** forms no precipitate, but the solution turns brown (compare ferrous and see use as indicator).

7. **Potassium thiocyanate** gives a blood-red colouration, due to the soluble ferric thiocyanate $Fe(SCN)_3$. This is a very delicate test for iron.

8. **Sodium phosphate** precipitates pale buff coloured ferric phosphate, $FePO_4$, which is soluble in mineral acids, but insoluble in acetic acid or ammonia.

Ferrous salts are easily oxidised (chlorine or nitric acid being generally used) to ferric salts, and ferric salts are easily reduced to ferrous.

$$6FeSO_4 + 3H_2SO_4 + 2HNO_3 = 3Fe_2(SO_4)_3 + 4H_2O + 2NO.$$
$$2FeCl_3 + SnCl_2 = 2FeCl_2 + SnCl_4.$$

Chromium.

Cr, 52·1.

161. DRY REACTIONS.

1. Heated on charcoal, chromium compounds leave a dark green residue.

2. Heated on platinum or porcelain with fusion mixture and a little nitre, a yellow mass of potassium and sodium chromates is obtained.

3. Heated in a borax bead, an emerald green bead is formed in either flame ($Cr_2O_3 . B_2O_3$).

REACTIONS IN SOLUTION. Use a solution of chrome alum, $K_2SO_4 . Cr_2(SO_4)_3 . 24H_2O$.

1. As with iron, add hydrochloric acid, then sulphuretted hydrogen (no change), boil off the latter and add ammonium chloride and **ammonium hydrate**. A bluish-green precipitate of chromic hydrate, $Cr(OH)_3$, is formed, slightly soluble in excess, giving a lilac-coloured liquid, from which the chromium hydrate is completely precipitated by boiling. Chromium hydrate is soluble in dilute acids.

2. **Sodium hydrate** gives the same precipitate, which readily dissolves in excess to a bright green solution of sodium chromite $Cr(ONa)_3$. The hydrate begins at once to separate from this solution when boiled, but for complete precipitation long boiling is required.

3. **Ammonium sulphide** produces the same precipitate.

$$Cr_2(SO_4)_3 + 3(NH_4)_2S + 6H_2O = 2Cr(OH)_3 + 3(NH_4)_2SO_4 + 3H_2S.$$

4. **Sodium carbonate** gives a precipitate of hydrate and carbonate, which gives pure hydrate on boiling, evolving CO_2.

5. **Sodium phosphate** precipitates pale green chromium phosphate, $CrPO_4$, soluble in mineral acids, insoluble in acetic acid or ammonia.

Oxidation of Chromium Compounds.

Chromium compounds are easily oxidised to chromates, as in the dry reaction (2) or as follows :

1. Add **sodium peroxide** to a cold solution of a chromic salt, and boil till effervescence ceases. Sodium chromate is formed.

$$2Cr(OH)_3 + 3Na_2O_2 = 2Na_2CrO_4 + 2NaOH + 2H_2O.$$

A method of separation of Fe, Al, and Cr consists in separating the Cr and Al from the iron as sodium chromate and sodium aluminate by the action of sodium peroxide.

2. **Sodium hypochlorite,** or sodium hydrate and chlorine water or bromine water oxidise chromic salts.

$$2Cr(OH)_3 + 3NaOCl + 4NaOH = 2Na_2CrO_4 + 3NaCl + 5H_2O.$$

Chromates.

Reactions in Solution.

1. **Sulphuretted hydrogen** in presence of an acid reduces the chromate to a chromic salt, the colour changing to green, and sulphur being precipitated.

$$2K_2CrO_4 + 10HCl + 3H_2S = 4KCl + 2CrCl_3 + 8H_2O + 3S.$$

2. **Sulphurous acid** also reduces chromates to green chromic salts, but no sulphur is precipitated.

$$2K_2CrO_4 + 3H_2SO_3 + 2H_2SO_4 = 2K_2SO_4 + Cr_2(SO_4)_3 + 5H_2O.$$

3. **Silver nitrate** in neutral solutions forms a red precipitate of silver chromate, soluble in nitric acid.

4. **Lead nitrate** gives a yellow precipitate of lead chromate.

5. **Barium chloride** precipitates yellow barium chromate, soluble in hydrochloric acid.

6. **Mercurous nitrate** produces a dark-red precipitate of mercurous chromate.

Chromates are easily reduced to chromic salts, and therefore chromates and chromic acid are powerful oxidising agents (see volumetric work, par. **258**).

DISTINCTION BETWEEN CHROMATES AND DICHROMATES.

Chromates are converted into dichromates on addition of acid, the colour changing from yellow to orange. Dichromates are changed to chromates by alkalies.

Chromates are neutral to litmus, while dichromates are acid. Solutions of dichromate decompose carbonates, carbon dioxide being evolved.

DETECTION OF A CHROMIUM SALT AND CHROMATE TOGETHER.

Boil a little of the substance with sodium carbonate solution and filter. The residue will contain the chromium of the chromium salt as hydroxide. A yellow filtrate shows the presence of chromate or dichromate.

Aluminium.

Al, 27·1.

162. DRY REACTION.

1. Heated on charcoal, aluminium compounds leave white aluminium oxide, Al_2O_3, which when moistened with cobalt nitrate and reheated gives a blue mass of cobalt aluminate. (Silica and silicates, phosphates and borates, give a blue mass, but require to be fused.)

REACTIONS IN SOLUTION. Use a solution of alum, $K_2SO_4Al_2(SO_4)_3 24H_2O$.

1. Add hydrochloric acid, etc., as before, then ammonium chloride and **ammonium hydrate**. A white precipitate of aluminium hydrate, $Al(OH)_3$, is produced, soluble in a large excess of the reagent, but completely reprecipitated on boiling. The precipitate is also soluble in dilute acids.

2. **Sodium hydrate** gives the same precipitate, readily soluble in excess, forming sodium aluminate, Na_3AlO_3, which is decomposed by ammonium chloride, the precipitation being complete on boiling. Sodium aluminate is also decomposed by dilute acids.

3. **Ammonium sulphide** forms the same precipitate, with evolution of sulphuretted hydrogen.

4. **Sodium carbonate** produces a precipitate of hydrate and carbonate, which gives pure hydrate on boiling.

5. **Sodium phosphate** precipitates white aluminium phosphate, $AlPO_4$, soluble in mineral acids, but insoluble in acetic acid or ammonia.

SEPARATION OF THE METALS OF THE IRON GROUP.

163. The detection and separation of the metals of the iron group depend upon

(*a*) The solubility of the hydrates in hydrochloric acid.

(*b*) The precipitation from this solution of ferric and chromic hydrates by boiling with excess of sodium hydrate, aluminium remaining in solution.

(*c*) The conversion of chromic hydrate to a soluble chromate, the iron oxide being insoluble.

THE ZINC GROUP.

Metals whose sulphides are precipitated in alkaline, but not in acid solutions.

Zinc.

Zn, 65·37.

164. DRY REACTIONS.

1. Heated in a bulb tube, most zinc compounds leave a residue of oxide, which is yellow when hot and white when cold.

2. Heated on charcoal with a little sodium carbonate, zinc compounds are reduced to the metal, which is volatile and easily oxidised. No bead is formed, but an incrustation of oxide appears on the charcoal. When moistened with solution of cobalt nitrate and again heated, the residue becomes green (Rinmann's green).

REACTIONS IN SOLUTION. Use a solution of zinc sulphate, $ZnSO_4 . 7H_2O$.

To a portion of this solution add dilute hydrochloric acid, then sulphuretted hydrogen; next boil off the latter or take a fresh portion of the solution and add ammonium chloride and

ammonia. Note the results and consider their utility. Repeat this procedure with the other metals of the group.

1. **Ammonium sulphide**, or H_2S in the alkaline solution, gives a white precipitate of zinc sulphide, ZnS, insoluble in alkalies or in acetic acid, soluble in mineral acids.

2. **Sodium** or **potassium hydrate** precipitates white zinc hydroxide, $Zn(OH)_2$, soluble in excess, forming an alkaline zincate, $Zn(ONa)_2$. Sulphuretted hydrogen precipitates the zinc from this completely as sulphide.

3. **Sodium** or **potassium carbonate** produces a white precipitate of basic zinc carbonate, $2ZnCO_3 . 3Zn(OH)_2$. Some carbon dioxide gas is liberated. This precipitate is also obtained with ammonium carbonate, but is soluble in excess and in other ammonium salts.

4. **Potassium cyanide** gives a white precipitate of zinc cyanide, soluble in excess, forming the double cyanide, $ZnCy_2 . 2KCy$.

Manganese.

Mn, 54·93.

165. Dry Reactions.

1. All manganese compounds, heated with three parts of fusion mixture and a little nitre, on platinum or porcelain, produce a dark blue-green mass of alkaline manganate, Na_2MnO_4. If this is dissolved in water and the solution acidified with sulphuric acid, the colour changes to pink, owing to the formation of permanganate, $NaMnO_4$. (See par. **91.**)

2. The borax or microcosmic bead is coloured violet to amethyst in the oxidising flame ($Mn_2O_3 . B_2O_3$), but is colourless in the reducing flame ($MnO . B_2O_3$).

Reactions in Solution. Use a solution of manganous chloride or sulphate. Test with hydrochloric acid, etc., as directed under zinc.

1. **Ammonium sulphide** gives a flesh-coloured precipitate of manganous sulphide, MnS, insoluble in alkalies, soluble in acetic acid or mineral acids.

2. **Sodium hydrate** precipitates white manganous hydrate, $Mn(OH)_2$, insoluble in excess, soluble in ammonium chloride.

The precipitate rapidly turns brown through oxidation to manganic hydrate, $Mn_2O_3 . H_2O$.

3. **Ammonium hydrate** gives the same precipitate in absence of ammonium salts. In presence of ammonium chloride no precipitate is obtained, but by passing air through the warm solution the manganese may be completely precipitated as sesquioxide, $Mn_2O_3 . H_2O$. For this reason it is difficult to separate iron and manganese by means of ammonium chloride and hydrate.

4. **Sodium peroxide,** sodium hypochlorite, or bromine water, added to the alkaline solution of manganous salts, oxidise the manganese to higher oxides, Mn_2O_3 or MnO_2, which are precipitated.

5. **Alkali carbonates** precipitate white manganous carbonate, $MnCO_3$, insoluble in excess, soluble in ammonium chloride. It oxidises in air to brown manganic hydrate.

6. **Permanganic acid reaction.** Place some lead peroxide, or red lead, in a test-tube, add dilute nitric acid and a solution of manganous salt (except haloid salts) and warm gently. Allow the lead peroxide to settle. The liquid has now a rose-pink colour, due to permanganic acid.

Permanganates.

1. **Heated alone,** these decompose into oxides of the metals and free oxygen, with some manganate.

$$2KMnO_4 = K_2O + 2MnO_2 + 3 . O.$$

2. **Heated gently** with **sulphuric acid,** some manganese heptoxide is first produced, the metals form sulphates, and free oxygen is evolved.

$$2KMnO_4 + H_2SO_4 = K_2SO_4 + Mn_2O_7 + H_2O.$$

$$2KMnO_4 + 3H_2SO_4 = K_2SO_4 + 2MnSO_4 + 3H_2O + 5 . O.$$

3. With strong **hydrochloric acid,** chlorides are produced, and free chlorine equivalent to the available oxygen.

$$2KMnO_4 + 16HCl = 2KCl + 2MnCl_2 + 8H_2O + 5 . Cl_2.$$

4. **All permanganates** dissolve in water, giving purple-red solutions. They are powerful oxidising agents, stable in the cold and in absence of easily oxidisable substances, but immediately reduced (decolourised) by sulphurous acid, sulphuretted hydrogen, ferrous salts, oxalic acid, etc.

5. **Hydrogen peroxide** and permanganates acidified with sulphuric acid immediately destroy each other when mixed, evolving oxygen in equivalent amounts. This reaction is employed for the estimation of hydrogen peroxide and of permanganates (see par. **256**).

Nickel.

Ni, 58·68.

166. DRY REACTIONS.

1. Heated on charcoal with fusion mixture, metallic nickel is obtained as a grey magnetic powder.

2. The borax bead is coloured red-brown in the oxidising flame ($NiO . B_2O_3$), and in the reducing flame colourless but slightly opaque from metallic nickel.

REACTIONS IN SOLUTION. Use a solution of nickel sulphate, $NiSO_4 . 7H_2O$.

1. **Ammonium sulphide** gives a black precipitate of nickelous sulphide, NiS, slightly soluble in excess, insoluble in acetic acid, soluble with difficulty in hydrochloric acid, readily in nitric acid, aqua regia, or hydrochloric acid and potassium chlorate.

2. **Sodium hydrate** precipitates apple-green nickelous hydrate, $Ni(OH)_2$, insoluble in excess, soluble in ammonia or its salts. On ignition it leaves grey nickelous oxide, NiO.

3. **Ammonium hydrate** gives the same precipitate, soluble in excess forming a deep blue solution.

4. **Sodium carbonate** precipitates an apple-green basic carbonate of varying composition. The same is obtained with ammonium carbonate, but is soluble in excess.

5. **Potassium cyanide** produces a green precipitate of nickelous cyanide, $Ni(CN)_2$, soluble in excess of potassium cyanide, forming the complex cyanide K_2NiCy_4. Sulphuretted hydrogen gives no precipitate from this solution, the nickel forming part of the complex anion $= NiCy_4$, but the compound is completely decomposed by boiling with hydrochloric acid.

6. To the above solution in potassium cyanide add **sodium hypochlorite**, or sodium hydrate and bromine water, and warm gently. Black nickelic hydrate is precipitated.

$$2NiCy_2 + NaOCl + 5H_2O = Ni_2(OH)_6 + NaCl + 4HCy.$$

This reaction may be employed to separate nickel from cobalt.

7. **Dimethylglyoxime** solution gives a fine carmine precipitate of the nickel salt $[HO . N : (C . CH_3)_2 : NO]_2Ni$, which is used for the estimation of the metal (**299**, B). Cobalt gives no precipitate, and may thus be separated from nickel.

Cobalt.

Co, 58·97.

167. DRY REACTIONS.

1. Heated on charcoal, cobalt compounds are reduced less easily than those of nickel, giving a grey, feebly magnetic powder.

2. The borax bead is coloured deep blue in both oxidising and reducing flames ($CoO . B_2O_3$).

REACTIONS IN SOLUTION. Use cobaltous chloride or nitrate.

1. **Ammonium sulphide** precipitates black cobaltous sulphide, CoS, insoluble in excess or in dilute acids, soluble in aqua regia.

2. **Sodium hydrate** precipitates a blue basic salt, which absorbs oxygen from air, the colour changing to olive-green.

3. **Ammonium hydrate** gives a slight precipitate of a similar basic salt, soluble in excess, forming a red-brown solution. This absorbs oxygen on standing, and becomes red in colour.

4. **Potassium cyanide** gives a light brown precipitate of cobaltous cyanide, $CoCy_2$, soluble in excess, with formation of the double cyanide $4KCy . CoCy_2$. Dilute acids reprecipitate cobaltous cyanide.

This substance is very readily oxidised to potassium cobalticyanide, the change taking place even on boiling with water alone, but more readily in presence of a little free hydrocyanic acid ; hydrogen is evolved in the absence of air :

$$2CoCy_2 + 2HCy = Co_2Cy_6 + H_2.$$

This cobaltic cyanide remains in solution as the complex potassium cobalticyanide, from which oxidising agents (NaOCl) give no precipitate.

SEPARATION OF THE METALS OF THE ZINC GROUP.

168. The detection and separation of the metals in this group depend on :

(*a*) The solubility of zinc and manganous sulphides in dilute hydrochloric acid, those of nickel and cobalt being insoluble.

(*b*) The precipitation of zinc and manganous hydroxides by sodium hydrate, the zinc compound alone being soluble in excess.

(*c*) The borax bead colour test for nickel and cobalt, and the precipitation of nickel as dimethylglyoxime salt, the cobalt being left in solution.

THE BARIUM GROUP.

Metals whose carbonates are insoluble in ammonium hydroxide or carbonate.

Barium.

Ba, 137·37.

169. DRY REACTION. Barium compounds give a persistent green colour to the Bunsen flame, especially when moistened with hydrochloric acid.

REACTIONS IN SOLUTION. Use a solution of barium chloride.

Test small portions of the solutions of barium, strontium and calcium with the group reagents for the foregoing groups, namely (i) hydrochloric acid, (ii) hydrochloric acid and sulphuretted hydrogen, (iii) ammonium chloride and ammonia, and (iv) ammonium sulphide. Explain the results obtained.

1. **Ammonium carbonate** gives a heavy white precipitate of barium carbonate, $BaCO_3$, decomposed by acetic acid, and slightly soluble in ammonium chloride.

2. **Sulphuric acid** or a soluble sulphate ($CaSO_4$) precipitates heavy white barium sulphate, $BaSO_4$, insoluble in acids.

3. **Potassium chromate** produces a lemon-yellow precipitate of barium chromate, $BaCrO_4$, soluble in mineral acids.

4. **Ammonium oxalate** precipitates white barium oxalate, BaC_2O_4, soluble in mineral acids, or in oxalic or acetic acids when freshly precipitated.

Strontium.

Sr, 87·62.

170. DRY REACTION. Strontium compounds impart an intense crimson colour to the Bunsen flame.

REACTIONS IN SOLUTION. Use a solution of strontium chloride.

1. **Ammonium carbonate** gives a white precipitate of strontium carbonate, $SrCO_3$, decomposed by acetic acid.

2. **Sulphuric acid** produces a white precipitate of strontium sulphate, $SrSO_4$. The precipitation is slow from dilute solutions, and is accelerated by adding ammonium sulphate.

3. **Potassium chromate** precipitates yellow strontium chromate, $SrCrO_4$, from solutions which are not too dilute. The chromate is soluble in acetic or mineral acids.

4. **Ammonium oxalate** gives a white precipitate of strontium oxalate, SrC_2O_4, less soluble than barium oxalate, decomposed by mineral acids.

Calcium.

Ca, 40·09.

171. DRY REACTION. The Bunsen flame is coloured yellowish red by most calcium compounds, especially when moistened with strong hydrochloric acid.

REACTIONS IN SOLUTION. Use a solution of calcium chloride.

1. **Ammonium carbonate** precipitates white, amorphous calcium carbonate, $CaCO_3$, which becomes crystalline on standing. This is soluble in acetic acid and slightly soluble in ammonium chloride, especially on boiling.

2. **Sulphuric acid** gives from strong solutions of calcium salts a white precipitate of calcium sulphate, $CaSO_4$, soluble in much water or in ammonium sulphate solution.

3. **Potassium chromate** causes no precipitation, calcium chromate being soluble in water.

4. **Ammonium oxalate** produces even from very dilute solutions a white crystalline precipitate of calcium oxalate, CaC_2O_4, soluble in mineral acids, insoluble in acetic acid or ammonia.

SEPARATION OF THE METALS OF THE BARIUM GROUP.

172. The separation and detection of these metals is based on the facts that barium chromate is insoluble in acetic acid, the others being soluble, and that strontium sulphate is insoluble in ammonium sulphate solution, while calcium sulphate is soluble.

THE SODIUM GROUP.

This group comprises the metals potassium, sodium, lithium and magnesium, and the complex cation ammonium, NH_4, which are not precipitated by any previous group reagent. The student should prove the latter statement for himself.

Potassium.

K, 39·1.

173. DRY REACTION. Potassium compounds colour the Bunsen flame violet. This cannot be detected in presence of sodium, unless a cobalt glass or permanganate or indigo prism be used, which does not transmit the yellow sodium light.

REACTIONS IN SOLUTION. Use potassium chloride.

1. **Platinic chloride** gives a heavy, golden-yellow crystalline precipitate of potassium platinichloride, K_2PtCl_6, slightly soluble in water, insoluble in acids or in alcohol. If no precipitate is obtained, evaporate to a small bulk and add an equal volume of alcohol.

2. **Tartaric acid** precipitates white crystalline potassium bitartrate, $KC_4H_5O_6$, from strong solutions, especially on shaking.

3. Sodium cobaltinitrite gives with neutral potassium salts a canary-yellow precipitate of potassium cobaltinitrite, $K_3Co(NO_2)_6$. Mixed sodium-potassium cobaltinitrites may also come down. Ammonium salts give a similar precipitate, and must be removed before applying the test (**211**).

Sodium.

Na, 23·0.

174. DRY REACTION. An intense golden-yellow colour is imparted to the Bunsen flame, the light appearing through

the spectroscope as a bright double line, coinciding with the solar D line. The reaction is a very delicate one, and the colouration should be strong and persistent.

As most sodium compounds are soluble in water, the flame test chiefly is relied on for the detection of sodium.

Lithium.

Li, 7·0.

175. DRY REACTION. The Bunsen flame is coloured crimson by lithium compounds, the spectrum containing two lines, a bright crimson and a feebler orange line.

REACTIONS IN SOLUTION. Use a solution of lithium chloride. Platinum chloride or tartaric acid gives no precipitate.

1. **Sodium phosphate** gives, on boiling, a white precipitate of lithium phosphate, $2Li_3PO_4 . H_2O$, especially in presence of sodium hydrate. The precipitate is soluble in hydrochloric acid or in ammonium salts.

2. **Alkaline carbonates** precipitate from strong solutions white crystalline lithium carbonate, Li_2CO_3, insoluble in alcohol, decomposed by acids.

Ammonium.

NH_4, 18·04.

176. DRY REACTION. When heated in a dry tube, ammonium salts volatilise either wholly (those with volatile acids) or partly (those with fixed acids, as phosphoric). In the former case a sublimate will form on the cold part of the tube. On adding a little soda lime and again heating, free ammonia is obtained.

REACTIONS IN SOLUTION. Use a solution of ammonium chloride.

1. **Platinic chloride** gives a heavy, yellow crystalline precipitate of ammonium platinichloride $(NH_4)_2PtCl_6$, soluble in much water, insoluble in alcohol. On ignition, this compound leaves only spongy platinum, and is thus distinguished from the similar potassium compound, which leaves a residue of potassium chloride and platinum.

2. All ammonium salts are decomposed when ground with **sodium hydrate** or **soda lime**, evolving free ammonia.

3. **Nessler's reagent** gives a brown precipitate of dimercurammonium iodide, or a yellow or brown colouration in solutions containing mere traces of ammonia,

$$2(2KI \cdot HgI_2) + NH_4OH + 3KOH = NHg_2I \cdot H_2O + 7KI + 3H_2O.$$

Magnesium.

Mg, 24·32.

177. DRY REACTION. Magnesium compounds leave a white residue on charcoal, which becomes incandescent. If this is moistened with cobalt nitrate and again heated, it becomes pink. This reaction, however, is only reliable in absence of other oxides.

REACTIONS IN SOLUTION. Use a solution of magnesium sulphate.

1. **Ammonium hydrate** produces a partial precipitate of magnesium hydrate, $Mg(OH)_2$, soluble in ammonium chloride. Ammonium salts completely prevent this precipitation.

2. **Potassium**, sodium, calcium or barium **hydrates** precipitate magnesium hydrate almost completely. It is almost insoluble in cold or hot water, readily soluble in dilute acids.

3. **Sodium phosphate** gives a white precipitate of magnesium hydrogen phosphate, $MgHPO_4$. In presence of ammonia, magnesium ammonium phosphate, $MgNH_4PO_4 \cdot 6H_2O$, is obtained as a white crystalline precipitate, practically insoluble in dilute ammonium hydrate, soluble in mineral acids or in acetic acid. From very dilute solutions the precipitate forms very slowly.

$$MgSO_4 + Na_2HPO_4 + NH_4OH = MgNH_4PO_4 + Na_2SO_4 + H_2O.$$

When ignited the precipitate is decomposed into magnesium pyrophosphate, with loss of ammonia and water (par. **307**).

$$2MgNH_4PO_4 = Mg_2P_2O_7 + 2NH_3 + H_2O.$$

DETECTION OF THE METALS OF THE SODIUM GROUP.

178. In this group the flame colouration is a reliable test for sodium, potassium and lithium, especially if examined by means of a spectroscope. Potassium is confirmed by the reaction with platinic chloride or sodium cobaltinitrite.

Ammonium compounds are detected in the original substance.

The only separation necessary is that of magnesium from lithium. This is effected by precipitating the magnesium in cold solution with sodium phosphate and ammonia, and the lithium by boiling the filtrate with sodium hydroxide.

REACTIONS OF THE ACIDS.

Hydrochloric Acid.

HCl.

179. REACTIONS. Use sodium chloride.

1. Warmed with strong **sulphuric acid**, hydrochloric acid is liberated, and is recognised by its smell and by the fumes in moist air.

2. Warmed with strong **sulphuric acid** and **manganese dioxide**, chlorine is liberated, recognised by its smell, and its bleaching action on litmus paper.

3. **Silver nitrate** gives a white precipitate of silver chloride, AgCl, readily soluble in ammonium hydrate, but insoluble in nitric acid.

4. Warmed with strong **sulphuric acid** and **potassium dichromate** or chromate, a red vapour of chromyl chloride, CrO_2Cl_2, is given off (see chromyl chloride, 57A).

$$4NaCl + K_2Cr_2O_7 + 3H_2SO_4 = 2CrO_2Cl_2 + 2Na_2SO_4 + K_2SO_4 + 3H_2O.$$

The vapour, when poured into a test tube containing water, gives a yellow solution of chromic acid and hydrochloric acid. If sodium hydrate be used instead of water a yellow solution of chromate and chloride will be produced.

$$CrO_2Cl_2 + 4NaOH = Na_2CrO_4 + 2NaCl + 2H_2O.$$

The chromate may be tested for by acidifying with acetic acid and adding lead acetate. (Compare the action of bromine on sodium hydrate.) This gives a means of detecting chlorides in presence of bromides.

Hydrobromic Acid.

HBr.

180. REACTIONS. Use potassium bromide.

1. Warmed with strong **sulphuric acid**, hydrobromic acid and bromine are liberated, the latter owing to oxidation of part of the hydrobromic acid by the sulphuric acid.

$$2HBr + H_2SO_4 = 2H_2O + SO_2 + Br_2.$$

2. With sulphuric acid and **manganese dioxide**, bromine is liberated.

3. **Silver nitrate** gives a pale yellow precipitate of silver bromide, $AgBr$, soluble with difficulty in ammonium hydrate, and insoluble in nitric acid.

4. **Chlorine water** (but not sodium hypochlorite or nitrous acid) added to a solution of a bromide liberates bromine, and on shaking with carbon disulphide or chloroform a brown layer is formed. Excess of chlorine water *gradually* oxidises the bromine to bromic acid, $HBrO_3$.

Hydriodic Acid.

HI.

181. REACTIONS. Use potassium iodide.

1. Warmed with concentrated **sulphuric acid**, a little hydriodic acid is produced, and much iodine. The smell of sulphuretted hydrogen may be detected.

$$2KI + H_2SO_4 = K_2SO_4 + 2HI.$$
$$8HI + H_2SO_4 = 4H_2O + H_2S + 4I_2.$$

2. Warmed with concentrated sulphuric acid and **manganese dioxide**, iodine is liberated.

3. **Silver nitrate** gives a pale yellow precipitate of silver iodide, AgI, insoluble in ammonium hydrate or in nitric acid.

4. **Chlorine water**, sodium hypochlorite or nitrous acid liberates iodine from iodides, and on shaking with carbon disulphide, a violet layer is obtained. The chlorine water must be added drop by drop, as the iodine liberated is very readily converted into iodic acid.

$$I + 3H_2O + 5Cl = HIO_3 + 5HCl.$$

If bromine and iodine are liberated together in this manner

and shaken with carbon disulphide, the iodine colour masks that of the bromine, but by careful addition of chlorine water the colour of the iodine disappears and that due to the bromine is left.

5. **Starch paste** gives with free iodine a deep blue colouration.

6. **Copper sulphate** in presence of sulphurous acid gives a white precipitate of cuprous iodide, Cu_2I_2.

$$2CuSO_4 + 2KI + H_2SO_3 + H_2O = 2KHSO_4 + H_2SO_4 + Cu_2I_2.$$

By this means the iodide may be removed, one part of the filtrate tested with chlorine water and carbon disulphide for bromide, and another part evaporated and tested by the chromyl chloride test for chloride.

To test for the halogens in presence of a cyanide, first remove the cyanide by boiling with dilute nitric acid, or with excess of sodium bicarbonate. Or precipitate with excess of $AgNO_3$ and ignite the precipitate. Silver cyanide is decomposed, the chloride only fused. See also under Hydrocyanic acid, p. 112.

Hydrofluoric Acid.

HF.

182. REACTIONS. Use sodium fluoride.

1. Warmed with strong **sulphuric acid**, hydrofluoric acid is liberated and may be made to etch glass. Use a leaden dish for this experiment. If a test-tube is used a greasy appearance is often noticed in the tube.

2. Heated with strong **sulphuric acid** and **sand**, silicon tetrafluoride is produced (see preparation of silica). On holding a moist glass rod near the mixture a deposit of silicic acid is seen on the rod.

3. **Calcium** or barium **chloride** gives a white precipitate of fluoride, CaF_2 or BaF_2.

4. **Silver nitrate** gives no precipitate.

Hypochlorous Acid.

HOCl.

183. Use sodium hypochlorite, NaOCl, or bleaching powder, CaCl(OCl). The peculiar smell of hypochlorites is due to free

hypochlorous acid, which is liberated by the action of atmospheric carbon dioxide gas.

$$NaOCl + CO_2 + H_2O = HOCl + NaHCO_3.$$

REACTIONS IN SOLUTION.

1. When **heated** in solution, or in the dry state, hypochlorites are converted into chlorides and chlorates :

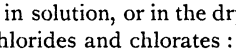

$$3Ca(OCl)_2 = 2CaCl_2 + Ca(ClO_3)_2.$$

2. When the solution is heated with a little **cobalt oxide** (obtained by addition of cobalt nitrate solution), oxygen is evolved, and a chloride left :

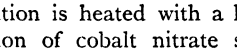

$$Ca(OCl)_2 = CaCl_2 + O_2.$$

3. On adding dilute **hydrochloric acid,** chlorine is liberated, which may be detected by adding to a solution of potassium iodide and starch (distinction from chlorates).

4. The acidified solution has a powerful **bleaching action** on vegetable colours—litmus and indigo are decolourised.

Chloric Acid.

$HClO_3$.

184. Use potassium chlorate, $KClO_3$.

DRY REACTION. All chlorates give off oxygen on heating, leaving chlorides. The oxygen contains traces of chlorine.

REACTIONS IN SOLUTION.

1. Heated gently with strong **sulphuric acid,** chlorine peroxide, ClO_2, is liberated, a yellowish green, explosive gas. Use only one small crystal of chlorate :

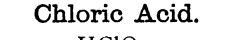

$$3KClO_3 + 2H_2SO_4 = 2KHSO_4 + KClO_4 + 2ClO_2 + H_2O.$$

2. Warmed with **hydrochloric acid,** a mixture of chlorine and chlorine peroxide is obtained :

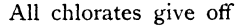

$$8KClO_3 + 24HCl = 6ClO_2 + 9Cl_2 + 8KCl + 12H_2O.$$

Indigo solution is decolourised by this mixture.

Carbonic Acid.

H_2CO_3.

185. DRY REACTIONS. Carbonates of the heavy metals give off carbon dioxide on heating.

Bicarbonates when heated alone, or when boiled in water, give off water and carbon dioxide, leaving carbonates (distinction between carbonates and bicarbonates).

REACTIONS IN SOLUTION. Use a solution of sodium carbonate, $Na_2CO_3 . 10H_2O$.

1. Dilute **hydrochloric acid** liberates carbon dioxide, which may be recognised by pouring the gas into lime water. The latter is turned milky.

2. **Silver nitrate** forms a white precipitate of silver carbonate, soluble in dilute nitric acid or in ammonium hydrate.

3. **Barium chloride** produces a white precipitate of barium carbonate, soluble in dilute hydrochloric acid.

4. **Potassium dichromate** liberates carbon dioxide from carbonates or bicarbonates, but does not liberate sulphur dioxide from sulphites. The dichromate is converted into chromate, with change of colour. Compare **186**, 5.

Sulphurous Acid.

H_2SO_3.

186. Use sodium sulphite, $Na_2SO_3 . 7H_2O$.

DRY REACTION. Heated on charcoal, a sulphide is formed; when the residue is placed on a silver coin and moistened with water, a black stain is produced.

REACTIONS IN SOLUTION.

1. Dilute **hydrochloric acid** liberates sulphur dioxide, which is recognised by its smell, and by reduction of potassium dichromate solution on a strip of filter paper held in the mouth of the test-tube. Green chromium sulphate is produced.

2. **Barium chloride** gives with strong solutions a white precipitate of barium sulphite, soluble in hydrochloric acid.

3. **Silver nitrate** produces a white precipitate of silver sulphite, soluble in nitric acid and in ammonium hydrate.

4. **Chlorine** or **bromine water** oxidises sulphites to sulphates, for which the solution may then be examined.

5. **Potassium dichromate** does not liberate sulphur dioxide from sulphites, but is itself reduced to green chromic sulphate. It may be used to separate sulphur dioxide and sulphuretted hydrogen from mixtures of these gases with carbon dioxide.

Sulphuric Acid.

H_2SO_4.

187. Use sodium sulphate, $Na_2SO_4 . 10H_2O$.

DRY REACTION.

Heated on charcoal with fusion mixture, a sulphide is produced (see preparation of barium chloride from barium sulphate, **57** *b*).

$$BaSO_4 + 2C + Na_2CO_3 = Na_2S + BaCO_3 + 2CO_2.$$

The product, placed on a silver coin and moistened, produces a brown stain. Sulphites also are reduced.

REACTION IN SOLUTION.

Barium chloride gives a heavy white precipitate of barium sulphate, insoluble in acids.

Hydrosulphuric Acid.

(Sulphuretted Hydrogen), H_2S.

188. REACTIONS. Use sodium sulphide, Na_2S.

1. Warm concentrated **hydrochloric acid** liberates sulphuretted hydrogen, which blackens lead acetate paper, from most sulphides (exceptions, mercury, silver, arsenic).

2. **Silver nitrate** gives with solutions of sulphides a black precipitate of silver sulphide, soluble in nitric acid. Solutions of other metallic salts, as those of copper, cadmium or lead, may also be used, and sulphuretted hydrogen may be separated in this way from mixtures with carbon dioxide.

Thiosulphuric Acid.

$H_2S_2O_3$.

189. DRY REACTION. Use sodium thiosulphate, $Na_2S_2O_3 . 5H_2O$.

Heated on charcoal with fusion mixture, a sulphide is produced.

REACTIONS IN SOLUTION.

1. Dilute **hydrochloric acid** decomposes thiosulphates, liberating sulphur dioxide and precipitating sulphur. (Compare sulphites.)

$$Na_2S_2O_3 + 2HCl = H_2O + 2NaCl + SO_2 + S.$$

2. **Barium chloride** gives no precipitate from dilute solutions.

3. **Silver nitrate** in excess gives a white precipitate of silver thiosulphate which on boiling turns yellow, brown, and finally black (Ag_2S).

4. **Iodine** solution and starch iodide are at once decolourised, the solution remaining neutral (**80**).

Nitrous Acid.

HNO_2.

190. DRY REACTION. Use sodium nitrite, $NaNO_2$. Heated on charcoal, nitrites deflagrate.

REACTIONS IN SOLUTION.

1. Dilute **hydrochloric acid** liberates brown fumes of nitrogen peroxide, together with nitric oxide.

2. A crystal or a solution of **ferrous sulphate** is turned brown when added to a solution of a nitrite, owing to the formation of the compound $2FeSO_4 . NO$.

3. **Potassium iodide** is decomposed by an acidified solution of a nitrite, liberating iodine, which gives a blue colour with starch.

4. Acidified **potassium permanganate** is decolourised, the nitrite being oxidised to nitrate (see estimation, **257**).

Nitric Acid.

HNO_3.

191. DRY REACTIONS. Use potassium nitrate, KNO_3.

1. Heated on charcoal, nitrates deflagrate.

2. Heated in a dry tube the nitrates of the heavy metals give off nitrogen peroxide and oxygen, and leave an oxide. The nitrates of the alkali metals on strongly heating give off oxygen and leave a nitrite, and finally an oxide.

REACTIONS IN SOLUTION.

1. Concentrated **sulphuric acid** added to a solution of a nitrate liberates nitric acid, and on the addition of copper, brown fumes are evolved.

2. If a solution of a nitrate is mixed with an equal bulk of **ferrous sulphate** solution, and concentrated **sulphuric acid** poured carefully down the tube, so forming a separate layer at the bottom, a brown colouration is formed at the junction of the layers. The brown substance has the composition $2FeSO_4 . NO$, and is decomposed on warming, liberating

nitric oxide. The brown colour is thus discharged. Iodides, bromides and nitrites interfere with this test.

Detection of Nitrates in presence of Bromides, Iodides and Nitrites.

Boil the substance with sodium hydroxide solution until all ammonium compounds, if present, are decomposed. Add a piece of aluminium foil and boil again; nitrates are completely reduced and evolution of ammonia now indicates the presence of a nitrate.

Nitrites also give this reaction, and if they are already present, they must be removed before applying the above test, by boiling for a few minutes with ammonium chloride.

Chromic Acid.

H_2CrO_4.

Permanganic Acid.

$H_2Mn_2O_8$.

The reactions of these acids will be found among those of the metals, under chromium and manganese respectively (pars. **161** and **165**).

Phosphoric Acids.

Orthophosphoric acid, H_3PO_4.
Pyrophosphoric acid, $H_4P_2O_7$.
Metaphosphoric acid, HPO_3.

192. Orthophosphates. Use sodium phosphate,

$$Na_2HPO_4 . 12H_2O.$$

Dry Reaction.

Heated on charcoal, moistened with cobalt nitrate and reheated, phosphates give a blue mass.

Reactions in Solution.

1. **Silver nitrate** produces a canary yellow precipitate of silver phosphate, Ag_3PO_4, soluble in nitric acid, dilute acetic acid or ammonium hydroxide.

2. **Barium chloride** gives a white precipitate of barium phosphate, $BaHPO_4$, soluble in acetic acid.

3. **Ammonium molybdate** when added to a solution of a phosphate in the presence of strong nitric acid produces a yellow precipitate of ammonium phosphomolybdate either at once or on very gentle warming. (Compare arsenates, **156**.)

4. **Magnesia mixture** forms a white precipitate of magnesium ammonium phosphate, $MgNH_4PO_4 . 6H_2O$, soluble in acids, insoluble in ammonium hydroxide. (Compare arsenates, **156**.)

5. **Ferric chloride** gives a yellowish white precipitate of ferric phosphate, $FePO_4$, soluble in excess of ferric chloride, insoluble in acetic acid. If the hydrochloric acid produced in the reaction is removed (by addition of sodium acetate) all the iron is precipitated.

Pyrophosphates give a white precipitate of silver pyrophosphate, $Ag_4P_2O_7$, soluble in nitric acid and in ammonium hydroxide. Metaphosphates also give a white precipitate of silver metaphosphate, $AgPO_3$, similarly soluble.

Magnesia mixture precipitates pyrophosphates but not metaphosphates.

Metaphosphates in presence of acetic acid coagulate albumen.

Pyro- and meta-phosphates in cold solution very slowly pass into orthophosphates, but the change is greatly accelerated by boiling or by acids. Tests for these phosphates should be made therefore in freshly prepared solutions.

Phosphorous Acid.

H_3PO_3.

REACTIONS. Use the sodium salt.

1. **Silver nitrate** gives a white precipitate of silver phosphite, Ag_2HPO_3, which rapidly turns black owing to reduction to silver.

2. **Barium chloride** gives a white precipitate of barium phosphite, $BaHPO_3$. (Compare hypophosphites, p. 178.)

3. Mercuric chloride is reduced to mercurous chloride, and this, further, to mercury.

Phosphorous acid and phosphites when heated strongly give off phosphine, leaving a phosphate.

$$4H_3PO_3 = 3H_3PO_4 + PH_3.$$

Hypophosphorous Acid.

$$H \cdot H_2PO_2.$$

Use sodium hypophosphite.

DRY REACTION.

Hypophosphorous acid and hypophosphites when gently heated in a dry tube give off phosphine, leaving a phosphate

$$2H_3PO_2 = H_3PO_4 + PH_3.$$

REACTIONS IN SOLUTION.

1. **Silver nitrate** gives with neutral solutions a white precipitate of silver hypophosphite, AgH_2PO_2, which rapidly becomes black when boiled.

2. **Mercuric chloride** is reduced to mercurous chloride and mercury.

3. **Barium chloride** gives no precipitate.

4. **Copper sulphate**, added to an acidified solution of a hypophosphite and warmed, is reduced to copper hydride which is thrown down as a chocolate brown precipitate:

$$2H_3PO_2 + 2CuSO_4 + 3H_2O = 2H_3PO_4 + H_2SO_4 + H_2SO_3 + Cu_2H_2.$$

Phosphites do not give this precipitate.

(Copper hydride is decomposed by hydrochloric acid, hydrogen being liberated).

Arsenious Acid.

$$H_3AsO_3.$$

Arsenic Acid.

$$H_3AsO_4.$$

The reactions of these two acids will be found among those of the metals (par. **156**).

Confirmation of Arsenites, Arsenates and Phosphates together.

To the solution add magnesia mixture. Arsenates and phosphates are precipitated. Filter, acidify the filtrate and pass sulphuretted hydrogen. A yellow precipitate confirms arsenite.

Wash the precipitate of arsenate and phosphate, dissolve it in hydrochloric acid, reduce the arsenate with sulphur dioxide (see **156**), boil off the excess of sulphur dioxide and pass sulphuretted hydrogen. A yellow precipitate confirms arsenate.

Arsenates give with silver nitrate in neutral solutions, a reddish brown precipitate.

Boric Acid.

H_3BO_3.

193. Dry Reactions. Use borax, $Na_2B_4O_7 . 10H_2O$.

1. Borates when heated swell up, fuse, and leave a transparent mass which, when moistened with cobalt nitrate and remelted, gives a blue colour.

2. Place a little of the borate in a porcelain dish, add a few drops of strong **sulphuric acid** and a little **methylated spirit**, stir and apply a flame to the mixture. A green flame is obtained.

3. The above test is better carried out by heating a small quantity of the borate, mixed with **calcium fluoride** and potassium hydrogen sulphate and made into a stiff paste with water, on a platinum wire. Boron fluoride is liberated, which colours the flame green.

$$CaF_2 + 2KHSO_4 = CaSO_4 + K_2SO_4 + 2HF.$$
$$B_2O_3 + 6HF = 3H_2O + 2BF_3.$$

4. Boric acid (liberated from a borate by addition of an acid) gives a brown stain on **turmeric** paper. The stain becomes greenish black on addition of an alkali.

Reaction in Solution.

Silver nitrate gives a white precipitate of metaborate,

soluble in ammonium hydrate and in nitric acid. On boiling, the precipitate turns brown and finally black owing to reduction.

Silicic Acid.

H_2SiO_3.

194. DRY REACTIONS. Use sodium silicate, Na_2SiO_3.

1. Heated on charcoal, moistened with cobalt nitrate and reheated, silica and silicates give a blue mass on fusion (compare aluminium, **162**, 1).

2. Mixed with a **fluoride** and heated with concentrated **sulphuric acid**, silicon tetrafluoride is produced (see fluorides, **182**, 2). This test must not be carried out in a glass vessel.

3. Heated in a **microcosmic** bead, silica does not dissolve, and silicates decompose slowly, leaving free silica.

4. Heated with **sodium carbonate**, soluble silicates are produced.

REACTIONS IN SOLUTION. Use soluble glass, Na_2SiO_3.

1. **Hydrochloric acid** liberates the silicic acid, which remains in solution in a colloidal state. On evaporation to dryness, insoluble silica is produced.

2. **Ammonium carbonate** gives a precipitate of silicic acid on boiling, ammonia being evolved.

3. **Silver nitrate** produces orange-coloured silver silicate, Ag_2SiO_3, which is soluble in ammonium hydrate and nitric acid.

Hydrogen Peroxide.

H_2O_2.

195. REACTIONS.

1. Hydrogen peroxide decomposes on heating, especially in presence of alkalies, oxygen being evolved.

2. To a solution of hydrogen peroxide (or sodium peroxide dissolved in water, using proper precautions) add dilute **sulphuric acid**, a little **ether**, and one or two drops of potassium **dichromate** solution, and shake. A deep blue colour is given to the layer of ether.

3. **Potassium iodide** added to an acidified solution of the peroxide yields iodine.

4. **Potassium permanganate**, acidified with sulphuric acid, is at once decolourised by hydrogen peroxide, oxygen being evolved from both substances (**256, 370**).

Metallic Oxides and Hydroxides.

196. The oxides of heavy metals are practically insoluble in water, and are variously coloured. Those of zinc and aluminium are colourless, zinc oxide becoming yellow on heating. Most of them dissolve readily in hydrochloric acid.

The oxides of the alkaline earth metals are colourless, and unite with water, with evolution of heat, to form soluble hydroxides, the solutions having an alkaline reaction. Magnesium oxide is very sparingly soluble, and faintly alkaline in reaction.

Oxides of the alkali metals also unite with water, with evolution of heat, forming the caustic alkali hydroxides. These in the solid form are deliquescent, and absorb carbon dioxide from the atmosphere.

Soluble hydroxides may be detected by means of phenol phthalein. In presence of alkali carbonates, which give hydroxyl ions by hydrolysis, p. 188, the carbonate may be precipitated by addition of calcium chloride, and the solution then tested for hydroxides.

Hydroxides of heavy metals give up water on heating, and in general leave anhydrous oxides.

Metallic Peroxides.

197. Peroxides are the highest oxides of certain metals. They are not basic, but contain more oxygen than the highest salt-forming oxide of the metal, and metals that form peroxides usually form several oxides.

Peroxides of the heavy metals evolve a portion of the oxygen on heating alone, and also on heating with sulphuric acid, though not necessarily the same proportion :

$$3MnO_2 \xrightarrow[\text{Heat}]{} Mn_3O_4 + O_2.$$

$$2MnO_2 + 2H_2SO_4 = 2MnSO_4 + 2H_2O + O_2.$$

On heating with strong hydrochloric acid they liberate chlorine equivalent to the oxygen evolved in the sulphuric acid reaction,

$$MnO_2 + 4HCl = MnCl_2 + 2H_2O + Cl_2.$$

The residual base then dissolves in the acid, and is detected in the ordinary course of analysis.

The true peroxides correspond to hydrogen peroxide, which may be obtained from them by treatment with acid in the cold, as BaO_2, Na_2O_2.

Per-acids and Salts.

198. Such substances as ammonium persulphate and sodium perborate are frequently used as oxidising and bleaching agents. Like the peroxides, most of them liberate oxygen on heating, leaving a salt of the normal acid from which the name is derived. Thus potassium percarbonate on heating evolves oxygen and carbon dioxide, leaving potassium carbonate :

$$2K_2C_2O_6 = 2K_2CO_3 + 2CO_2 + O_2.$$

Sodium perborate evolves oxygen readily at 100°, leaving borax and caustic soda. The cold aqueous solution contains hydrogen peroxide, and is alkaline.

Potassium persulphate similarly decomposes in a warm solution, leaving sulphate :

$$2K_2S_2O_8 + 2H_2O = 2K_2SO_4 + 2H_2SO_4 + O_2.$$

Most of these salts also liberate iodine from potassium iodide, more or less rapidly :

$$K_2C_2O_6 + 2KI = 2K_2CO_3 + I_2.$$

and oxidise ferrous salts into ferric salts (**248**). By reference to these characteristics they may be easily identified.

IONISATION.

199. The reactions which have been studied in this section are essentially the reactions of the ions.

When a substance is dissolved in water, several things may happen to it, the evidence for which may be obtained from a study of the behaviour of the solution.

Many substances unite with the solvent to form hydrates, such as calcium chloride and other salts which separate from solutions together with water of crystallisation. Others again are hydrolysed, as sodium carbonate, potassium phenolate, diphenylamine hydrochloride and other salts, particularly those in which either the acid or the base or both are weak.

These changes, however, may accompany others of greater importance. Soluble substances may be divided into two classes, which are sharply distinguished by their behaviour when dissolved :

(*a*) The substance dissolves without change, the molecules being unaltered and behaving in dilute solution as do the molecules of gas in a confined space. Such substances, for example cane sugar in water, obey the laws of dilute solutions, which are similar to the ideal laws of gases.[1] Solutions of this nature do not conduct the electric current, that is, they are non-electrolytes.

(*b*) The substance is ionised more or less completely on dissolving, the molecules being divided or dissociated into two or more ions, the nature of which depends on that of the original substance. All such substances in solution give abnormally high values for the osmotic pressure and other physical properties of dilute solutions ; more molecules appear to be present than are to be expected on the assumption that the substance dissolves without change.

Arrhenius [2] showed that such abnormal solutions conduct the electric current ; they are electrolytes. Further, if a substance which in water gives abnormal values for the osmotic pressure be dissolved in another solvent in which it behaves normally, it also loses its power of conducting electricity. Thus dissociation and electrolytic power are intimately connected.

The substances which give such electrolytic solutions are salts, acids and bases. For a complete account of the properties of such solutions reference must be made to the

[1] Van't Hoff, 1885. *Zeit. Phys. Chem.*, **1**, 481 (1887).
[2] *Ibid.*, **1**, 621 (1887).

text-books of physical chemistry. A brief reference can be made here only to a few points that are of special interest for the student of analytical chemistry.

Water is the most important and the most powerful ionising solvent, and it is very probable that the ions are combined with water to form hydrates [1] such as $H^{\cdot}(H_2O)x$ and $Cl'(H_2O)y$. This does not involve any essential modification of the theory, but rather suggests a possible explanation of the rôle of water as an ionising agent. Werner [2] suggested that acids and bases are not themselves dissociated, but unite with one or other of the ions of water, an acid uniting with hydroxyl ion and a base with hydrogen ion. Each thus greatly increases the ionisation of water, giving a strongly conducting solution. On neutralisation, the ions of water re-unite, leaving the ions of the salt :

$$[KOH \,.\, H^{\cdot}] + OH' + [ClH \,.\, OH'] + H^{\cdot}$$
$$= H_2O + [KOH \,.\, H^{\cdot}] + [ClH \,.\, OH'],$$

which are equivalent to hydrated metal and acid ions,

$$K^{\cdot}(H_2O) \text{ and } Cl'(H_2O).$$

Alcohols also possess this ionising power to some extent, and methyl alcohol acts more powerfully than ethyl alcohol. On the other hand benzene, chloroform, carbon bisulphide, etc., are non-ionising solvents ; for example, hydrogen chloride dissolved in benzene has an extremely small conductivity, indicating only a trace of ionisation.

That the reactions given by solutions of metallic salts are really those of the ions, is clearly indicated by such considerations as the following.

The reactions of calcium, for example, are the same whether the solution employed be that of the chloride, nitrate, acetate, or other salt. Further, all permanganates give similarly coloured solutions, characterised by the same absorption spectrum in solutions of equivalent concentration. The colour is that of the permanganic ion. Again,

[1] Washburn, *J. Amer. C.S.*, **31**, 322 (1909).
[2] *New Ideas on Inorganic Chemistry*, p. 209 (1911 *edn.*).

if an alcoholic solution of silver nitrate be added to solutions of sodium iodide and of ethyl iodide respectively, in the same solvent, an immediate precipitate of silver iodide is obtained in the first case, but not in the second, which shows only a slow reaction. The sodium iodide is ionised to some extent in alcoholic solution: the ethyl iodide not at all. This is confirmed by the electrolytic and other properties of the solutions. In general, the conductivity and the capacity for reaction are parallel; indeed Hittorf defined electrolytes as salts which are capable of exchanging their constituents instantaneously.

The nature of the ions is often difficult to decide. Thus in a solution of K_2PtCl_6 the ions are not 2K, Pt and 6Cl; silver nitrate solution gives no precipitate of AgCl, but a yellow precipitate of Ag_2PtCl_6. The ions are thus $2K^{\cdot}$ and $PtCl''_6$, and when the salt is electrolysed, potassium separates at the cathode and $PtCl_6$ at the anode, decomposing there into Pt and 6Cl. The point can usually be decided by observing which complexes interchange themselves with others. Double salts show the reactions of both constituents, as in the case of copper potassium sulphate, and are dissociated into the corresponding ions. Complex salts, on the other hand, like the cyanides produced by dissolving a precipitated metallic cyanide in excess of the precipitant, often dissociate in a complex way. K_4FeCy_6 does not show any of the usual reactions for $Fe^{\cdot\cdot}$ ions; the salt dissociates in solution into the ions $4K^{\cdot}$ and $FeCy_6''''$. So also $KAgCy_2$ dissociates into $K^{\cdot}$ and $AgCy'_2$.

The degree of ionisation depends on the nature of the substance, increases with dilution, and very slightly with increase of temperature. Since the conductivity of a solution is a function of the ions, the limiting degree of dissociation is indicated by the limiting value of the molecular conductivity, that is, the value for infinite dilution. The nature of the undissociated molecule in solution is at present unascertained, but we know it behaves as a unit, and does not consist of free ions.

Strength of acids. The characteristic reactions of acids and bases are due to the ions of $H^{\cdot}$ and OH' respectively which their solutions contain. "Strong" acids or bases, that is, those which exhibit these properties in the most marked manner, are those which dissociate to the greatest degree. Ostwald [1] compared the relative strengths of acids by comparing the influence exerted by them, in equivalent quantities on such reactions as the hydrolysis of methyl acetate, the inversion of cane sugar, the conversion of acetamide into ammonium acetate, reactions all of which are catalysed by the presence of $H^{\cdot}$ ions. His results showed a close agreement in the order of strength of acids deduced from these various methods, and agreed also with that given by conductivity measurements.

Polybasic acids usually show different "strengths" for the separate $H^{\cdot}$ ions. Thus, instead of the complete dissociation

$$H_2A \rightleftharpoons 2H^{\cdot} + A'',$$

such acids usually dissociate according to the scheme

$$H_2A \rightleftharpoons H^{\cdot} + HA',$$

then

$$HA' \rightleftharpoons H^{\cdot} + A''.$$

This is true also for the salts of such acids.

Hydrogen ion concentration. In this sense the acidity of any solution is due to the $H^{\cdot}$ ions actually present, and must be clearly distinguished from the total amount of ionisable hydrogen, which is estimated by the ordinary chemical methods of acidimetry (**236**). Thus, while equivalent amounts of hydrochloric acid and of acetic acid require the same quantity of sodium hydroxide for neutralisation, the catalytic methods above indicated, or the conductivities, show that the hydrochloric acid is ionised to a much greater degree than the acetic. For 0·001 N solutions the proportions are 97 per cent. and 13·6 per cent. respectively. In the case of the "weak" acetic acid, titration with alkali removes the free $H^{\cdot}$ ions, thus

[1] *Lehrbuch der allgem. Chemie.*

displacing the equilibrium; more acid at once ionises, and the reaction proceeds so to the end point.

Conductivity measurements provide the most accurate method for determining hydrion concentration.

Water itself is very slightly dissociated, the ions being of course present in exactly equivalent amounts. From conductivity measurements of the purest water obtainable by vacuum distillation, Kohlrausch[1] found the concentration (C) to be, in gram-ions per litre,

$$C_H = C_{OH} = 0{\cdot}78 \times 10^{-7} \text{ at } 18^\circ,$$

or

$$1{\cdot}05 \times 10^{-7} \text{ at } 25^\circ,$$

or about 1 gram $H^{\cdot}$ ions and 17 grams OH' ions in 10 million litres.

This is true also for all neutral aqueous solutions. And in any aqueous solution, since the concentration of undissociated water molecules is constant, it must follow in accordance with the law of mass action

$$H_2O \rightleftharpoons H^{\cdot} + OH'$$

that the product of the ion-concentrations is also constant:

$$C_{H_2O} = C_H \times C_{OH} = 1 \times 10^{-14.14}.$$

The temperature-coefficient of ionisation of pure water is much higher (5·8 °/₀ at 18°) than that for most electrolytes (2–2·5 °/₀) or for ordinary distilled water (2 °/₀).

It is customary to express the $H^{\cdot}$ ion concentration as the exponent to the base 10 of the concentration, without the negative sign, and to use for this the symbol P_H. Thus a decinormal solution of hydrochloric acid, assuming it to be fully dissociated, would have a $H^{\cdot}$ ion concentration of $N \times 10^{-1}$ or $P_H 1$. Since the dissociation is only about 97 per cent., the actual value is $P_H 1{\cdot}01$. In pure water, we have the values P_H 7·07 and P_{OH} 7·07. The greater the P_H value, of course, the lower is the actual concentration of $H^{\cdot}$ ions. There is further no need to determine the P_{OH} value, since the sum of the two must always be 14·14.

Further reference will be made to this in the remarks on indicators (**238**).

[1] *Wied. Ann.* **53**, 209 (1894); *Zeit. Phys. Chem.*, **14**, 317 (1894).

Hydrolysis of salts. The hydrolytic action of water on certain salts is due to the ionisation of the water itself. In the case of a salt containing a weak acid, like sodium acetate, we have in solution the systems

$$NaC_2H_3O_2 \rightleftharpoons Na^{\cdot} + C_2H_3O_2'$$

and

$$H_2O \rightleftharpoons H^{\cdot} + OH',$$

with possibility of interchange among the ions. Since acetic acid is only feebly dissociated, the $C_2H_3O_2'$ ions remove $H^{\cdot}$ ions from the system to form undissociated molecules of acetic acid, while there is no corresponding removal of OH' ions, NaOH being a strong base largely dissociated. The result is a reduction of the hydrion concentration, a preponderance of OH' ions, and an alkaline reaction. It may be calculated from the equilibrium equations and the known values of the ionisation constants, that in a decinormal solution sodium acetate is hydrolysed to the extent of 0·045 per cent., and potassium cyanide to nearly 1·3 per cent. That this hydrolysis increases on dilution, as the theory requires, may be illustrated very simply by Rose's experiment. A concentrated solution of borax is coloured blue with litmus, and acetic acid is added until the litmus just turns red. On addition of water the litmus again turns blue, owing to the increased hydrolysis.

Conversely all salts formed by the union of strong acids with weak bases, like ferric chloride or copper sulphate, are slightly hydrolysed in aqueous solution and have a distinct acid reaction. Basic salts often separate on standing.

When both the acid and the base are weak, but soluble, the salt is very largely decomposed in water. If the acid and the base are not only weak but one at least sparingly soluble, the salt practically will not exist in water. Thus, for example, aluminium carbonate or sulphide are not formed by precipitation, and if the sulphide prepared in the dry way be placed in water, it decomposes into the hydroxide and sulphuretted hydrogen. So also silver borate, which separates as a white precipitate on mixing a concentrated solution of borax with silver nitrate, in dilute solution is decomposed, giving a brown precipitate of silver

oxide. Aluminium and chromium acetates, again, are hydrolysed on boiling their aqueous solutions, giving deposits of the hydroxides (mordants), and zinc, iron, copper and other metals give basic carbonates.

The solubility-product. When a solution is saturated the dissolved substance is in equilibrium with the solid phase, and the concentration law is applicable. For illustration, take the case of lead sulphate :

$$PbSO_4 \text{ (solid)} \rightleftharpoons PbSO_4 \text{ (dissolved)}$$

let the concentrations at a given temperature be

$$C \text{ (solid)} \qquad C \text{ (dissolved)},$$

then we have the relationship

$$\frac{C \text{ (dissolved)}}{C \text{ (solid)}} = k \text{ (constant)}.$$

Since the active mass of a substance in the solid phase is constant, the concentration in the solution must be also constant for any given temperature. This is in accord with our knowledge of solubility.

In the case of salts and other ionisable substances, the dissolved portion exists partly as ions, and the equilibrium law controls this reaction also, so that we have the system :

$$\underset{C \text{ (solid)}}{PbSO_4 \text{ (solid)}} \rightleftharpoons \underset{C \text{ (dissolved)}}{PbSO_4 \text{ (dissolved)}} \rightleftharpoons \underset{C_1}{Pb^{\cdot\cdot}} + \underset{C_2}{SO_4''},$$

and for the ionisation equilibrium

$$\frac{C_1 \times C_2}{C \text{ (dissolved)}} = k' \text{ (constant)}.$$

Multiplying these two equations, we find

$$\frac{C_1 \times C_2}{C \text{ (solid)}} = kk' ;$$

and since the concentration of the solid phase is constant, it follows that

$$C_1 \times C_2 = K \text{ (constant)}.$$

This product of the ion-concentrations is called the solubility-product, or ion-product, and is constant in all cases

when the solution is saturated, or in equilibrium, with the solid. The rule is independent of any assumption as to the constitution of the undissociated substance, or of the balance between the latter and its ions, which in the case of strong electrolytes is not in strict agreement with the equilibrium law.

In the general case of a substance dissociating into several ions,

$$M_mB_n \rightleftharpoons mM^{\cdot} + nB',$$

concentrations $\quad C \quad C_1 \quad C_2,$

the solubility-product is of the form

$$C_1^mC_2^n = K \text{ (constant)}.$$

It is thus, for any given temperature, the product of the ion-concentrations, each raised to the power indicated by the number of ions of that kind produced from one molecule of the salt.

Precipitation. These considerations are of special interest in reference to the precipitation of sparingly soluble substances. Normally the liquid is saturated with the substance precipitated. If the concentration in the liquid phase is such that the ion-product is less than the normal value corresponding with the temperature, the liquid will exert a solvent action on the precipitate. If, on the other hand, the solubility-product is exceeded, the liquid is supersaturated.

It has long been known that the addition of an excess of the precipitant renders the precipitate less soluble, temperature and other conditions being equal, and this device is commonly practised in analysis. The explanation is the general one, that the presence of a second electrolyte having one ion in common with the first, reduces the solubility of the first.[1] For this addition will obviously increase the concentration of the common ion, say the SO_4'' (C_2 above) in precipitating lead sulphate with a slight excess of sulphuric acid (**303**). But the solubility-product C_1C_2 remains

[1] Nernst, *Zeit. Phys. Chem.*, **4**, 372 (1889). A. A. Noyes, *ibid.*, **6**, 241 (1890); **9**, 603 (1892); **26**, 152 (1898).

constant, so that C_1 must diminish. In other words, some of the ionised substance passes to the solid phase, and the precipitation is rendered more complete. The same reason underlies the practice of washing precipitates with a dilute solution of a substance having one ion in common with the precipitate, as mercurous chromate with mercurous nitrate (**298**), magnesium ammonium phosphate with ammonia (**307**), or ammonium phosphomolybdate with ammonium nitrate (**350**).

Salting-out. Changes of solubility may be effected by changing the composition of the solvent, as by the addition of alcohol in the precipitation of lead sulphate (**303**) or strontium sulphate (**306**), or in the process of salting-out so frequently used in organic work. Thus alcohol may be separated from water by dissolving potassium carbonate in the mixture (**117**) ; soap is separated from its aqueous solution (**125**) by addition of common salt. Such actions are due to quite other reasons than the diminution of solubility in the presence of a common ion, explained under the previous heading ; there is no relationship of this kind The action depends on the nature of the added salt, and upon its union with molecules of the solvent which thereupon cease to function as solvent ; it does not depend on the nature of the substance to be precipitated.

The re-dissolving of precipitates, in most cases, may be explained in terms of the solubility product. Thus the amphoteric zinc hydroxide dissolves in either hydrochloric acid or sodium hydroxide (**164**, 2). In the former case, the zinc hydroxide is in equilibrium with its ions of $Zn^{\cdot\cdot}$ and $2OH'$. The hydrogen ions from the acid unite with the OH' ions to form water, which is only feebly ionised, and more $Zn(OH)_2$ must dissolve to restore equilibrium. This continues until all is dissolved, there being then in solution only $Zn^{\cdot\cdot}$ and Cl' ions, with the small concentrations of $H^{\cdot}$ and OH' ions always present in neutral liquids. Sodium hydroxide, however, converts the $Zn(OH)_2$ into $Zn(ONa)_2$, whose ions are $2Na^{\cdot}$ and ZnO_2''. Hence $Zn^{\cdot}$ ions are removed

from the solution and more $Zn(OH)_2$ must dissolve until all is converted into sodium zincate.

Similar considerations apply to the action of strong acids on sparingly soluble salts of weak (feebly dissociated) acids, such as calcium phosphate or ferric benzoate.

Magnesium hydroxide, to take another example, dissolves in ammonium salts, and if these be added in advance, no precipitate is obtained on addition of ammonium hydroxide (**177**, 1). This used to be attributed to the formation of double salts, as $MgCl_2 . NH_4Cl$. These do exist, but similar double salts are formed with KCl and NaCl, yet these do not prevent precipitation with ammonia. The true explanation is found in the interactions of the ions. We have

$$\underset{\text{(solid).}}{Mg(OH)_2} \rightleftharpoons \underset{\text{(dissolved).}}{Mg(OH)_2} \rightleftharpoons Mg^{\cdot\cdot} + 2OH'$$

$$2NH_4Cl \rightleftharpoons 2Cl' + 2\overset{+}{N}H_4^{\cdot}$$

$$\rightleftharpoons$$

$$2NH_4OH.$$

The $NH_4^{\cdot}$ ions obtained by the dissociation of the NH_4Cl, which is strongly ionised, remove the OH′ ions produced from the dissolved $Mg(OH)_2$, forming the feebly ionised NH_4OH. To maintain the equilibrium, $Mg(OH)_2$ must pass from the solid phase to the liquid, and this continues so long as the product of the concentrations of $Mg^{\cdot}$ and OH′ ions is less than the solubility product for magnesium hydroxide.

For this reason also magnesium salts are only partially decomposed by ammonium hydroxide: some ammonium salt is always formed and acts in the manner just described. Further, an excess of the ammonium salt added beforehand so reduces the ionisation of the NH_4OH that the product of the concentrations $[Mg^{\cdot}] \times [OH']$ never reaches the value of the solubility product. Consequently no precipitate is produced.

Excess of the precipitant often exerts a solvent action on the precipitate. Thus when ammonia is added to salts of copper, nickel, etc., the hydroxide first formed is redissolved by an excess of ammonia, the metal ion uniting with

ammonia to form a compound ion of the general form $M(NH_3)_n$. The latter is again decomposed on addition of acid, the $(NH_3)_n$ forming $NH_4^{\cdot}$ ions with the $H^{\cdot}$ ions of the acid, and the metallic hydroxide is again precipitated as the neutral point is approached.

Complex ions are also produced when the alkali cyanides dissolve the cyanides or hydroxides of the heavy metals. Frequent reference has already been made to these (**133**).

SYSTEMATIC DETECTION OF THE IONS.

200. The detection of metals in a mixture containing several is facilitated by a preliminary separation into groups. These groups depend chiefly on similarities in the solubility of certain salts of the metals, and therefore vary slightly according to the salts chosen for precipitation. They do not generally follow the natural classification of the elements; but in some cases, such as barium, strontium and calcium, the family resemblance is so strong as to bring these metals also into the same analytical group.

The reactions upon which such separations are based have already been studied in Section II., and a method of analysis is described in pars. **202-214**. It will readily be understood that this is not the only method available : some alternatives are suggested, and others will occur to the student in practice.

For full explanations of analytical methods reference must be made to the lecture course. The following observations are of special interest in regard to the separation of the metals into groups.

The advantage of a slight excess of precipitant has been explained in the preceding paragraph. In the **lead group** this is rendered necessary by the fact that lead chloride is appreciably soluble in cold water. A small excess of dilute hydrochloric acid, however, so reduces the concentration of $Pb^{\cdot\cdot}$ ions, that with care lead may be completely precipitated in group I., and mere traces should pass over to the second group.

The copper group comprises the metals whose sulphides are insoluble in dilute hydrochloric acid.

Precipitation with sulphuretted hydrogen must be made with great care. In a solution saturated with the gas at 15° there is only 0·47 gram per 100 c.cs. Hydrosulphides are not present to any extent in the precipitation of sulphides; the S'' ion is the effective precipitant. But the gas in solution is very feebly ionised :

$$H_2S2 \rightleftharpoons H^{\cdot} + S'',$$

concentrations $$[H_2S] = [H^{\cdot}]^2 \times [S''] = k,$$

and thus the sulphides are more or less sensitive to the action of concentrated acids, that of cadmium being the most easily dissolved. Addition of acid increases the concentration of $H^{\cdot}$ ions, thereby reducing that of the S'' ions; and when this is so small that the product $[Cd^{\cdot\cdot}] \times [S'']$ is less than the solubility product for CdS, the sulphide dissolves.

Care must therefore be taken to avoid undue excess of acid, and to test the filtrate by diluting with water to reduce the concentration of $H^{\cdot}$ ions, and again saturating with H_2S. If no further precipitate is obtained the conditions were right at the outset.

The aluminium group contains the metals whose hydroxides are insoluble in ammonia and ammonium salts, namely $Fe^{\cdot\cdot\cdot}$, $Cr^{\cdot\cdot\cdot}$ and $Al^{\cdot\cdot\cdot}$. These may be separated in this way from the metals of the zinc group, whose hydroxides are not precipitated by NH_4OH in presence of ammonium salts. But the method is occasionally inaccurate, inasmuch as the amphoteric hydroxides of $Al^{\cdot\cdot\cdot}$, $Cr^{\cdot\cdot\cdot}$ and $Zn^{\cdot\cdot}$ tend to unite with the basic hydroxides of the zinc group, which may thus be lost. An alternative method is to precipitate the two groups together with H_2S in presence of NH_4OH and NH_4Cl. The precipitate then contains the hydroxides of aluminium and chromium (p. 188) and the sulphides of iron and the zinc group. These may be dissolved in HCl and separated in various ways. A quantitative method is found in the action of suspended barium

carbonate on the chlorides. This substance is not sufficiently soluble to precipitate the carbonates of the zinc group, but it precipitates the hydroxides of the aluminium group, which are thus completely separated from the solution of the zinc group chlorides.

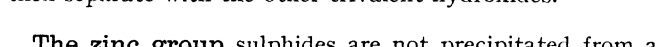

$$2FeCl_3 + 3BaCO_3 + 3H_2O = 2Fe(OH)_3 + 3BaCl_2 + 3CO_2.$$

Iron salts, if present, should therefore be oxidised before the addition of barium carbonate.

Manganese is so easily oxidised in alkaline or slightly acid solutions, that it is very difficult to prevent its precipitation with the aluminium group in presence of ammonia. Even in the barium carbonate method, prolonged exposure to the air may cause the formation of $Mn(OH)_3$, which will then separate with the other trivalent hydroxides.

The zinc group sulphides are not precipitated from a neutral solution. As was noted above in the case of cadmium, sulphuretted hydrogen is so slightly ionised in solution that the concentration of S'' ions is too small to raise the product of the ion-concentrations, say $(Zn^{\cdot\cdot}) \times (S'')$, to the value of the solubility-product for that substance. But when a little alkali or alkali sulphide is added, this alkali sulphide is strongly ionised and the necessary concentration of S'' ions is at once attained : there is an immediate precipitation of zinc sulphide.

Although the sulphides of nickel and cobalt are very slightly soluble in hydrochloric acid, the separation of zinc and manganese from them by means of very dilute acid is quite satisfactory. The action of acid on all of these sulphides is of the same kind, but it is so much slower in the case of nickel and cobalt that only traces of these metals go into solution.

The barium group metals are easily detected and distinguished by their flame colourations, which should be examined by means of the spectroscope. The metals form a number of sparingly soluble salts, the solubility of each varying with the atomic weights of the metals. Some of

these are shown in the following table,[1] in grams per litre at 18-20° :

	Barium.	Strontium.	Calcium.
Hydroxide - -	37·0	7·7	1·7
Carbonate - -	0·018	0·0066	0·011
Sulphate - -	0·0023	0·114	2·023
Chromate - -	0·0035	1·2	4·0
Oxalate - -	0·0905	0·046	0·0055

From these numbers it appears that the carbonates have the most uniformly small solubility, and accordingly ammonium carbonate is used as the group reagent. But barium carbonate is comparatively easily soluble, and an excess of the reagent and the lapse of a little time are required to ensure complete precipitation (**204**).

The metals of this group afford a good example of fractional precipitation. Thus if ammonium carbonate be added in small quantities to a solution containing salts of all three metals, the strontium is first precipitated to the exclusion of the others : and similarly calcium before barium. This may easily be proved by experiment. Again, if the three sulphates are boiled with sodium carbonate solution, the barium sulphate is so slowly attacked that it may be separated from the strontium and calcium, these being converted into carbonates which may be dissolved in acetic acid.

Magnesium is not precipitated by ammonia or ammonium carbonate in presence of ammonium salts, as explained in par. **199**, and may be detected in the filtrate from the barium group by the addition of sodium or ammonium phosphate. It should be remembered that any small quantities of other metals, as for instance barium, which have been passed over from other groups, will be precipitated here, since the phosphates are all insoluble in ammonia.

The systematic detection of **acid ions** should follow that of the metals. This is sufficiently explained in pars. **212** and **213**.

[1] Various Authorities. See Comey's *Dictionary of Chemical Solubilities*.

THE COLLOIDAL STATE.

201. Some knowledge of colloid behaviour is desirable for the successful practice of analytical chemistry.

Since Thomas Graham[1] first distinguished substances as crystalloids and colloids, according as they were able or unable to diffuse through certain membranes, very great advances have been made in our knowledge of this subject, which is now treated as a special branch of chemistry.[2]

Graham worked with a great variety of materials, and found that many insoluble substances could be made to assume the colloidal form. Since his day it has been shown that there is no definite relationship between chemical constitution and colloid state. While it is true that many natural products of complex constitution, such as the proteins, cellulose, starch, occur as colloids, some of these, like egg-albumen and haemoglobin, have been crystallised; and on the other hand quite simple substances like common salt and the metals can assume the colloidal form. Practically all substances can be obtained in the colloidal state, which is, in the words of von Weimarn, "a universally possible state of matter," and the study of colloid chemistry is really the study not of special groups of compounds but of the colloidal condition of matter.

Dispersoids. The so-called colloidal solutions are not true solutions of the type of the molecular and ionised solutions. Their physical properties, such as osmotic pressure, which is very low, are not in accordance with this view. They are really suspensions of matter in an extremely fine state of division, and are thus two-phase systems. The size of the particles is about $0{\cdot}1\ \mu$ to $1\ \mu\mu$, or from one ten-thousandth to one millionth of a millimetre. The existence of these particles is revealed by their optical behaviour, in that they render visible the path of a beam of light in an

[1] *Trans. Royal Soc.* **151**, 183 (1861).

[2] See Wolfgang Ostwald's *Handbook of Colloid Chemistry* (Churchill, 1919).

otherwise dark fluid (Tyndall phenomenon), and show the Brownian [1] movement by the agency of the ultramicroscope,[2] the principle of which is to detect the presence of particles by the light reflected from them in a dark field.

Such liquids therefore pass without change through ordinary filters and even through most of the fine porcelain and clay filters, and are thus differentiated on the one hand from the coarser suspensions, which may be filtered. On the other hand they differ from the molecular dispersions or true solutions in that they do not diffuse and do not dialyse, which molecular solutions do. Further, there exist transition systems not only between coarse dispersions and colloids, but between colloids and molecularly dispersed solutions. The colloids merely represent a realm differentiated for practical purposes from a continuous series of systems.[3]

Colloidal liquids may be divided into two classes :

(*a*) Suspensoids, or suspension colloids, in which the discontinuous or disperse phase is a solid, while the continuous phase is a liquid ;

(*b*) Emulsoids, or emulsion colloids, in which, as in an emulsion, both the continuous and the disperse phases are liquids.

Preparation of Colloids.[4] **Arsenious Sulphide.** When sulphuretted hydrogen is passed into an aqueous solution of arsenious oxide no precipitate is obtained, but the liquid becomes yellow and opalescent. It passes through a filter, and may be preserved unchanged for a long period. It contains arsenious sulphide in the colloidal form. On addition of a little hydrochloric acid, or a salt solution, the sulphide is at once precipitated.

Ferric hydroxide, precipitated by the careful addition of ammonia to a solution of ferric chloride, dissolves at first

[1] First observed with pollen grains in water, by Robert Brown, botanist, 1827.

[2] Zsigmondy, *Colloids and the Ultramicroscope* (1909).

[3] Wo. Ostwald, *Introduction to Colloid Chemistry*, 21 (1917).

[4] A. A. Noyes, *J. Amer. Chem. Soc.*, **27**, 86 (1905).

in the excess of ferric chloride, forming a dark reddish-brown solution. When this is placed in a parchment thimble or other form of dialyser, the ferric and ammonium chlorides diffuse into the water outside, leaving ferric hydroxide in the colloidal form. Such colloid preparations are used medicinally under the name of dialysed iron.

Gold, silver and other metals may be obtained in the colloidal form in many ways. Bredig's [1] method is to make a short electric arc (110 volts) between terminals of the metal under water; intensely coloured liquids are obtained. Many reduction reactions also give colloidal forms of the metals. Thus very dilute solutions of gold chloride may be reduced by warming with very dilute solutions of stannous chloride (purple of Cassius), or of tannic acid or hydrazine hydrochloride. Very sensitive colour reactions for the noble metals are given also by the use of the ordinary borax bead; the bead is moistened at the frothing stage with a very dilute solution of the metallic salt. On fusing, the metal forms a colloidal dispersion in the borax, the colour varying with the nature of the metal and its degree of dispersion. Donau [2] has shown that these borax colour reactions are in some cases more delicate than spectro-analytic ones.

Electrical properties of colloids. In a large class of colloids the suspended particles carry electrical charges, thus creating a difference of potential between the particles and the liquid in which they are suspended.[3] This may be shown by passing a current from a few storage cells, or more quickly with one of 200 volts, between platinum terminals in a U-tube filled with the liquid. The particles migrate towards one or the other electrode according to their electric sign. The phenomenon is known as cataphoresis. Most colloids are negatively charged, and pass towards the

[1] Bredig, *Anorganische Fermente*, 1901.

[2] J. Donau, *Koll.-Zeitschr.* **2**, 273 (1908).

[3] Picton and Linder, *J. Chem. Soc.* **61**, 160 (1892); **71**, 568 (1897).

anode; thus do sulphides (As_2S_3, CdS), salts (AgI, AgCl), metals (Au, Pt, Ag) and acids like silicic and stannic. Ferric and other metallic hydroxides, on the other hand, and basic dyes, are positively charged and migrate towards the cathode.

The source of the charge on colloid particles is believed to be a partial ionisation which leaves charged ions in the suspended particles. This view is supported by the fact that silicic and other acids change the sign of their charge on the change of the medium from acid to alkaline. In alkaline or weak acid liquids, which favour ionisation as an acid, silicic acid carries a negative charge; in presence of strong acid however the charge is positive, as it would be if the particles, like those of ferric hydroxide, retained positive ions.

Precipitation of colloids. Such electrically charged colloidal suspensions are readily precipitated by the addition of electrolytes, as in the case of arsenic sulphide. The precipitation follows Hardy's rule,[1] that negatively charged colloids are precipitated by the action of positive ions, and *vice versa*. The precipitating power of electrolytes increases largely with the valency of the precipitating ions[2]; bivalent ions are far more effective than univalent, and trivalent still more so.

Colloids are also precipitated by other colloids carrying an opposite charge. Thus arsenious sulphide and ferric hydroxide mutually precipitate each other, the precipitated gel being an adsorption complex of the two substances. The precipitation takes place in the proportions in which the colloids neutralise each other's charges.

Adsorption is one of the most characteristic properties of colloids, and arises from their great surface development. It consists in the fact that in contact-surfaces between solids and liquids, the concentration of a dissolved substance is always greater than in the rest of the solution.[3] The

[1] Hardy, *Proc. Royal Soc.* **66**, 110 (1899).

[2] H. Schulze, *J. prakt. Chemie* [2], **32**, 390 (1885).

[3] Wilhelm Ostwald, *Foundations of Anal. Chem.*, p. 19.

phenomenon occurs only with colloidal (amorphous) precipitates, and greatly increases the difficulty of washing these. In the precipitation of colloids with electrolytes, the precipitating ion is to some extent carried down with the colloid,[1] the amount of the ion so adsorbed by a given weight of a given colloid being proportional to the equivalent weights of the ions. The fraction of the total amount of substance adsorbed is greater the more dilute the original solution. Von Weimarn has shown [2] that the amounts of electrolytes adsorbed by a constant weight of barium sulphate increase with the diminution of the solubility of the electrolyte in the solvent used.

Applications in analysis. The colloidal state is clearly one to be avoided as far as possible in analytical operations. In the formation, filtration and washing of precipitates, those conditions that encourage the production of colloid forms should be excluded. One of the most important of these is *absence of electrolytes*, a condition which is approached in the washing of precipitates.[3] During this operation precipitates often appear to pass through the filter. The explanation frequently is that the substance forms a colloidal suspension with pure water, which is reprecipitated on mixing with the electrolytes in the filtrate. To avoid this the precipitate may be washed with a solution of some ammonium salt which does not interfere with its subsequent treatment, as ammonium sulphide for the sulphides of the zinc group.

For similar reasons, precipitation should not be made in very dilute solutions, or in presence of weak electrolytes only. Addition of salts may then be necessary to induce precipitation, as in the case of arsenic sulphide. High temperature, concentration and the lapse of time (standing overnight) all tend to reduce the degree of dispersion of colloids and complete their precipitation.

[1] Picton and Linder, *J. Chem. Soc.*, **67**, 63 (1895).

[2] P. P. von Weimarn, *Chemical Reviews*, **2**, 229 (1925).

[3] Julius Stieglitz, *Qualitative Analysis*, **1**, 131 (Bell, 1922).

A METHOD OF ANALYSIS.

202. Preliminary Examination.

The substance should be carefully described before proceeding with the tests.

EXPERIMENT.	OBSERVATION.	INFERENCE.
Heat a little of the substance in a dry tube	Fusion	Salts of the alkalies and some salts of Ba, Sr, and Ca. Also salts containing water of crystallisation.
	A colourless liquid condenses in the cooler portions of the tube	Salts containing water of crystallisation.
	The liquid is alkaline	NH_4.
	The liquid is acid	Acid salts.
	A gas is evolved :	
	oxygen	Some oxides; nitrates, chlorates, etc.
	ammonia	NH_4.
	sulphur dioxide	Sulphites or sulphates of heavy metals.
	sulphuretted hydrogen	Some sulphides in presence of water.
	nitrogen peroxide (brown)	Nitrates of heavy metals.
	bromine (brown)	Bromides, in presence of oxidising agents.
	chlorine	Chlorides, etc., some chlorates and hypochlorites.
	iodine	Iodides or free iodine
	carbon dioxide	Carbonates of heavy metals, bicarbonates, oxalates, etc.
	cyanogen	Some cyanides.
	A sublimate is formed:	
	white	NH_4, Hg, As.

EXPERIMENT.	OBSERVATION.	INFERENCE.
	white, with irritating fumes	Oxalic acid, etc.
	yellow	As_2S_3, HgI_2 (red when rubbed). Free S, or from thiosulphates or sulphides.
	yellow (which melts on heating)	
	metallic mirror (small beads)	Hg.
	dark grey	As, Sb.
	The residue is	
	white, infusible	Ba, Sr, Ca, Zn, Al, Mg, etc.
	white, yellow hot	ZnO.
	yellow, fusible, reddish brown hot	PbO, Bi_2O_3.
	reddish brown, black hot	Fe_2O_3.
	brown	Mn_3O_4.
	black	CuO, Co_3O_4, NiO.
	charred	Organic matter.
Heat a little of the substance on charcoal in the blowpipe flame.	Decrepitation	NaCl, $Pb(NO_3)_2$, etc.
	Deflagration	Nitrates, nitrites, chlorates.
	A bead of metal is produced:	
	greyish white, malleable, soft, marks paper	Pb.
	white (red tinge), brittle	Bi.
	white, hard	Ag.
	An incrustation is formed:	
	white	Sb, NH_4.
	white (fumes with garlic odour)	As.
	white, yellow hot	Zn, Sn.
	yellow	Bi.

Experiment.	Observation.	Inference.
If the residue is white, moisten with a few drops of $Co(NO_3)_2$ and reheat.	The residue is	
	fusible	Salts of alkalies, etc.
	white, infusible	Mg, Ba, Sr, Ca, Zn, Al.
	coloured	Cu, Fe, Cr, Co, Ni, etc.
	blue mass	Al (possibly phosphates, silicates, etc.).
	green mass	Zn.
	pink mass (difficult)	Mg.
Heat a little of the substance on platinum wire.	The flame is	
	bright yellow	Na.
	lambent blue	Pb, Cu, Sb, As, Bi, Cd, Zn.
	green	Cu, B_2O_3, Ba.
	dull red	Ca.
	crimson	Sr, Li.
	lilac	K.

	Observation.		Inference.
If the residue on charcoal is not white, heat a little of the substance in a borax bead.	The bead is in the		
	Oxidising flame	*Reducing flame*	
	amethyst	colourless	Mn.
	reddish brown	grey	Ni.
	greenish blue	red	Cu.
	yellow, red when hot	yellow (hot) bottle-green (cold)	Fe.
	green	green	Cr.
	blue	blue	Co.
Grind a little of the substance in a mortar with soda lime.	Ammonia is evolved		NH_4.

FINAL EXAMINATION FOR BASIC RADICALS.

203. Preparation of a solution.

(If the substance is a liquid it should be examined by (*a*) testing with litmus, (*b*) evaporating a little to dryness to see whether solids are present, (*c*) heating the residue, if any, to see whether organic substances are present.)

Take a *small* quantity of the substance, add water and boil.

If the substance is soluble in water, note its action on litmus, and proceed with the separation into groups.

If it does not dissolve, test the liquid with litmus paper; if alkaline or acid, a portion has dissolved. If neutral to litmus, filter a few drops and evaporate to see whether a part has dissolved. Now add a little dilute hydrochloric acid to the substance and boil for a few minutes. If a residue is left, boil further, add more water and boil again.

If the substance is found to be insoluble in dilute hydrochloric acid, boil a fresh quantity with strong hydrochloric acid for several minutes, add water and boil.

If not entirely soluble, boil another portion with aqua regia, evaporate nearly to dryness, add a little strong hydrochloric acid and evaporate to a small bulk to remove nitric acid. Dilute with water.

If yet some or all remains undissolved, warm a little with nitric acid, and if soluble add hydrochloric acid. A white precipitate, if formed, should be tested for the silver group and the hydrochloric acid (or aqua regia) solution proceeded with for the other groups.

If insoluble after the above treatment, examine by the method for insolubles, par. **214**.

In many cases it will be advantageous to treat the water or hydrochloric acid extract separately from that obtained by aqua regia, as the number of substances insoluble in hydrochloric acid but soluble in aqua regia is very limited, and those may often be easily identified.

204. Separation of the Metals into Groups.

To the cold solution add a few drops of HCl (if the substance has been dissolved in HCl this is unnecessary). If a precipitate is produced add more acid till there is no further precipitate.

Precipitate: May consist of
$PbCl_2$ (white)
AgCl (white)
HgCl (white)
Examine by table for the **silver** group.

Solution: Pass H_2S till no further precipitate, and warm. Filter, dilute the filtrate, and if a further precipitate is produced, pass more H_2S. (If an arsenate is suspected, add sulphurous acid, boil off excess, and pass H_2S.)

Precipitate: May consist of
HgS (yellow, finally black)
PbS (black, may be red)
CuS (black)
Bi_2S_3 (dark brown)
CdS (yellow)
As_2S_3 (yellow)
Sb_2S_3 (orange red)
SnS (dark brown)
SnS_2 (yellow)
S (very pale yellow)
Solution changes colour:
from yellow to green, chromates;
from yellow to pale green or colourless, ferric salts.
In both cases sulphur is precipitated.
Examine by table for **copper** group.

Solution: Boil off H_2S, concentrating the liquid if bulky. Add 2 or 3 drops of strong HNO_3 and boil. Take a little of the solution and test for phosphates by ammonium molybdate test. To the remainder of the solution add NH_4Cl, boil, add slight excess of ammonium hydrate, boil, and filter immediately. (The precipitate may be due to organic substances, silicates, etc. If these are present, they should be eliminated after passage of H_2S, by evaporating to dryness and igniting.)

Precipitate: If phosphates are absent, may consist of
$Fe(OH)_3$ (reddish brown)
$Cr(OH)_3$ (green)
$Al(OH)_3$ (white)

If phosphates are present, all the metals of the iron, zinc and barium groups and magnesium may be precipitated as phosphates together with the above hydrates.

Examine by table for **iron** group, or by the **phosphate** table.

Solution: At once pass H_2S.

Precipitate: May consist of
CoS (black)
NiS (black)
MnS (flesh coloured)
ZnS (white)
Examine by table for **zinc** group

Solution: Add NH_4OH till the liquid smells of NH_3, then $(NH_4)_2CO_3$ till no further precipitate; warm (do not boil) and allow to stand for ten minutes.

Precipitate: May consist of
$BaCO_3$ (white)
$SrCO_3$ (white)
$CaCO_3$ (white)
Examine by table for **barium** group.

Solution: May contain the metals Mg, K, Na, Li.
Examine by table for **sodium** group

205. Separation of the Metals of the Silver Group.

Wash the precipitate with cold water; then pour on boiling water, collecting the hot filtrate.

Solution: May contain $PbCl_2$.	*Residue*: Pour over it a small quantity of NH_4OH.	
Allow to cool; white needle-shaped crystals separate, **Pb** is present. If no precipitate on cooling, add K_2CrO_4; yellow precipitate of $PbCrO_4$.	*Solution*: Acidify with HNO_3; white precipitate. **Ag** is present.	*Residue*: Black (NH_2Hg_2Cl). **Hg** is present. Dissolve in small quantity of aqua regia, dilute largely and place in the solution a clean strip of copper. Grey deposit of mercury.

206. Separation of the Metals of the Copper Group.

Wash well with hot water, transfer to a test-tube and boil with yellow ammonium sulphide (if tin and mercury are absent, sodium hydrate may be used). Filter.

Residue: Wash well, transfer to a test-tube, add a little strong HNO_3, heat till red fumes cease, dilute. Test a few drops for lead with dilute H_2SO_4 and alcohol. If lead is present mix the whole of the liquid with H_2SO_4 (a few drops) and alcohol (an equal bulk), and allow to stand for 10 minutes in the cold.

Solution: Acidify with dilute HCl; a precipitate shows the presence of As, Sb, or Sn. Boil the moist precipitate with strong HCl and filter.

Residue: If lead is present, warm with ammonium acetate.

Solution: If alcohol has been added, boil this off, add excess of NH_4OH and warm;

Residue: Dissolve in a little aqua regia, dilute and place in the solution a bright strip of copper. Grey deposit, which becomes bright on rubbing,

Hg is present.

Solution: Add K_2CrO_4. Yellow precipitate,

Pb is present.

Precipitate: Pour over it a few drops of sodium stannite solution ($SnCl_2$ + excess NaOH): the ppt. is blackened,

Bi is present.

Solution: If colourless, Cu is absent; pass H_2S, yellow precipitate—**Cd** is present.

If blue, **Cu** is present; divide the solution into two parts.

To one part add acetic acid in excess and $K_4Fe(CN)_6$; brown precipitate, **Cu** is present.

To the other part add KCN till colourless and pass H_2S; yellow precipitate,

Cd is present.

Residue: May consist of As_2S_3 or S.

Dissolve in a small quantity of aqua regia, evaporate to expel most of the acid, add excess of ammonia, filter if necessary and add magnesia mixture. White cryst. ppt. of $Mg(NH_4)AsO_4$.

As is present.

Solution: Divide into two parts.

i. Make just alkaline with NH_4OH, add a few grams oxalic acid, boil and pass H_2S. Ppt. orange coloured.

Sb is present.

ii. Dilute with water, add 12″ iron wire and warm for some minutes to reduce $SnCl_4$ to $SnCl_2$. Filter into $HgCl_2$ solution. White (HgCl) or grey (Hg) ppt.

Sn is present.

207. Separation of the Metals of the Iron Group (Phosphates being absent).

Wash well, pour a little warm dilute HCl over the precipitate several times to dissolve the hydrates; to this solution add excess of NaOH, boil and filter.

Precipitate: Place on a piece of platinum foil, cover with fusion mixture and a little KNO_3 and fuse.* Boil the residue with water; filter.		*Solution*: Add 2 or 3 drops of litmus solution, acidify with HCl and add NH_4OH till alkaline: White precipitate which forms a "lake" with the colouring matter; **Al** is present.
Residue: reddish brown, **Fe** is present. Dissolve in HCl, and add $K_4Fe(CN)_6$; Dark blue precipitate.	*Solution*: Yellow, **Cr** is present. Add acetic acid in excess, and lead acetate, Yellow precipitate.	

* See footnote on p. 211.

207a. Alternative Method (Phosphates absent).

Wash well, pour a little warm dilute HCl over the precipitate several times to dissolve the hydrates; to this solution add sodium peroxide carefully, in small quantities, until in excess, boil and filter.

Precipitate: Reddish brown, **Fe** is present. Confirm as above.	Solution may contain sodium chromate and aluminate. Divide into two parts.	
	(1) Yellow solution, **Cr** is present. Add acetic acid in excess, and lead acetate; Yellow precipitate.	(2) Test for aluminium as described above.

208. Separation of the Metals precipitated in the Iron Group (Phosphates being present).

Wash well, dissolve in the smallest possible quantity of dilute HCl, nearly neutralise with solid sodium carbonate, and add an equal bulk of sodium acetate and acetic acid. If the solution is red, there is more iron than is sufficient to precipitate all the phosphoric acid. Boil till all the ferric acetate is precipitated, *i.e.* until the liquid is colourless. If the solution is colourless, boil and filter at once.

Precipitate: May consist of phosphates and basic acetates of Fe, Al, and possibly some of the Cr.	*Solution*: If the solution was red, no phosphoric acid remains; proceed with the separation into groups by NH_4Cl, NH_4OH, etc. If the solution was colourless, phosphoric acid may yet be present. Test 2 or 3 drops by adding one drop of dilute $FeCl_3$ solution; if a red colour is produced, proceed with the separation. If no red colour is produced, add $FeCl_3$ to the whole solution drop by drop till no further precipitate is formed. Boil to precipitate the ferric acetate, *i.e.* till the liquid is colourless. Filter.				
Examine by table for **iron group**, the phosphates of these metals behaving like the hydrates.	*Precipitate*: Is ferric phosphate and basic acetate. Neglect.	*Solution*: Add NH_4Cl, boil, add NH_4OH, boil and filter.			
		Precipitate: May consist of aluminium and chromium hydrates. Examine by portion of table for **iron group**.	*Solution*: Pass H_2S while still warm.		
			Precipitate: May consist of CoS, NiS, MnS, ZnS. Examine by table for **zinc group**.	*Solution*: Add NH_4OH and $(NH_4)_2CO_3$ and warm.	
				Precipitate: May consist of $BaCO_3$, $SrCO_3$, $CaCO_3$. Examine by table for **barium group**.	*Solution*: May contain magnesium. Add Na_2HPO_4: White precipitate on standing. **Mg** is present.

209. Separation of the Metals in the Zinc Group.

If the precipitate is not black, it may be dissolved in warm dilute HCl and tested for Mn and Zn only.

If black, wash the precipitate into a small porcelain dish with very dilute hydrochloric acid (1 of acid to 5 of water), stir till no more H_2S is evolved.

Residue: Test in borax bead. If the bead is Brown, Co is absent, Ni is present.

If the bead is blue, cobalt is present. Wash the residue into a small porcelain dish, add a little strong HCl and a crystal of $KClO_3$, and heat till dissolved. Evaporate the solution just to dryness and dissolve in a little water. Nearly neutralise with sodium carbonate (solid may be used to avoid increase of bulk), add 5 or 6 cc. of dimethylglyoxime solution, make just alkaline with ammonia, and warm. A fine carmine ppt. of the Ni salt of dimethylglyoxime,

Ni is present.

Solution: Boil till free from H_2S, add NaOH in excess, boil and filter.

Residue: is $Mn(OH)_2$. Confirm by bead of sodium carbonate with a crystal of KNO_3; green bead,

Mn is present.

Solution: Pass H_2S; white precipitate,

Zn is present.

NOTE.—A green colour (manganate) in the fused mass (**207**) on cooling indicates manganese, which tends to come down as hydrated Mn_2O_3 (dark brown) along with the iron group, and may thus escape detection in its proper place. The presence of manganese may be confirmed by the PbO_2 test (**165**, 6) in this or the original solution.

210. Separation of the Metals of the Barium Group.

Pour warm dilute acetic acid over the precipitate on the filter paper several times to dissolve the carbonates ; add K_2CrO_4.

Precipitate : yellow.

Ba is present.

Wash and test on platinum wire; green flame.

Dissolve in dilute HCl and add H_2SO_4.

White precipitate of $BaSO_4$, insoluble even on boiling.

Solution : Add $(NH_4)_2SO_4$; warm and allow the solution to stand ten minutes.

Precipitate : white.

Sr is present.

Wash and test on platinum wire ; crimson flame.

Ca may be precipitated here if the solution is strong, but may be removed by dissolving in a warm concentrated solution of ammonium sulphate.

Solution : Add ammonium oxalate ; white crystalline precipitate.

Ca is present.

211. Separation of the Metals of the Sodium Group.

Divide the solution into two parts.

Smaller part: Add Na_2HPO_4 and allow to stand; white crystalline precipitate.

Mg is present.

Filter, add NaOH to filtrate and boil; white precipitate of Li_3PO_4.

Li is present.

Confirm by the flame-test with the precipitate.

Larger part: Evaporate to dryness in a silica dish, and heat strongly to drive off the ammonium compounds.

If no residue, K, Na, Mg and Li are absent.

If a residue, test on platinum wire; yellow flame, **Na** is present;
lilac flame, **K** is present;
crimson flame, **Li** is present.

The flame of K may be identified in presence of the Na flame by using a blue glass or prism.

If Na is present, K should always be tested for by $PtCl_4$. To do this, dissolve the residue in the smallest possible quantity of water, place on a watch-glass, add $PtCl_4$ and rub gently with a glass rod; heavy yellow precipitate.

Or instead of $PtCl_4$, add a little sodium cobaltinitrite solution in a watch-glass, and stir: yellow precipitate.

K is present.

NH_4 salts must always be tested for in the original substance or solution, by grinding with lime or soda-lime in a mortar, or by boiling with caustic alkali. NH_3 is evolved.

212. Preliminary Examination for Acid Radicals.

Experiment.	Observation.	Inference.
Warm a little of the substance with dilute HCl.	Effervescence (gas evolved):	
	CO_2 (tested with lime water)	Carbonates.
	SO_2	Sulphites.
	SO_2 and S precipitated	Thiosulphates.
	H_2S	Sulphides.
	red fumes	Nitrites.
	chlorine	Hypochlorites.
	HCN	Cyanides.
Warm a little of the substance with strong H_2SO_4.	Acid fumes (test for HCl by adding MnO_2):	Chlorides, nitrates, fluorides.
	odour of acetic acid	Acetates.
	Cl_2	Chlorides in presence of an oxidising agent.
	CO_2	Carbonates, oxalates, etc.
	CO	Oxalates, formates, ferrocyanides, etc.
	chromyl chloride (red)	Chlorides in presence of chromates.
	red fumes	Nitrites or bromides.
	red fumes in presence of chlorine (bleaches)	Nitrates in presence of chlorides.
	violet fumes	Iodine or iodides.
	crackling in tube, and greenish yellow gas	Chlorates.
	SO_2	Sulphites or substances which reduce the H_2SO_4.
	H_2S	Sulphides or reducing agents.
	S	Reduction of H_2SO_4.
	charring, with evolution of SO_2 and CO_2	Tartrates, etc.
	greasy appearance in the tube	Fluorides.

By these preliminary tests for acids, many have been definitely shown to be either present or absent. Arsenic has been indicated by the charcoal test (**202**), and the rapidity of its precipitation as sulphide with H_2S (**204**) will distinguish between its presence as arsenite or arsenate. Phosphates and silicates have also been tested for during the separation of metals into groups and possibly suspected previously. The absence of other acids may be shown by the metals found, together with the solubility of the substance, *e.g.* a substance soluble in water or acids cannot contain barium and a sulphate and, if silver be present, chlorides, bromides and iodides must be absent. A final examination for acids should now be made.

213. Final Examination for Acid Radicals.

If a sulphite has been found test for a carbonate by **185**, 4.

If the water extract is alkaline and a carbonate is present test for hydroxides as in **196**.

To test for a sulphite in presence of a thiosulphate, see **81**.

To a solution of the substance in water acidified with HNO_3 or to a solution of the substance in HNO_3, add $AgNO_3$.	White precipitate (readily sol. in NH_4OH). V. pale yellow ppt. (sol. in NH_4OH). Pale yellow ppt. (insol. in NH_4OH) Orange yellow ppt. (sol. in NH_4OH).	HCl, HCN, HSCN. $H_4Fe(CN)_6$. HBr. HI. $H_3Fe(CN)_6$.

To detect bromides in presence of iodides, see **181**, 6.

To detect chlorides in presence of bromides and iodides, see **181**, 6.

To detect chlorides in presence of cyanides and complex cyanides, see **218**.

To a solution of the substance in water acidified with HCl or to a solution of the substance in HCl, add $BaCl_2$.	White ppt.	H_2SO_4, HF.

Confirm fluoride by **182**, 2, and if present test for sulphates by dry reaction in **187**. If sulphites, sulphides, or thiosulphates have been found, remove them (see **186**, **188**, **189**) before trying this test.

To a water extract of the substance add an equal bulk of ferrous sulphate solution and carefully pour conc. H_2SO_4 down the side of the tube so as to form a heavy layer at the bottom.	Brown ring between the two layers.	HNO_3.

If, however, nitrites, bromides or iodides have been found, refer to **191**.

Mix a little of the substance with calcium fluoride and a drop of conc. H_2SO_4 to a stiff paste and hold it on Pt. wire close to and below the side of the bunsen flame.	Green flame.	H_3BO_3

If chromium has been found, test for chromates and dichromates as on page 158.

For distinctions between ortho-, pyro- and metaphosphates, confirmation of arsenate in presence of arsenite and phosphate, and the reactions of phosphites and hypophosphites, see par. **192**.

In some cases the presence of certain metallic salts interferes with the silver nitrate test (*e.g.* ferrous salts give a black precipitate of silver). In these cases, and also where further confirmation of certain acids is desired (arsenic, thiosulphuric, etc.) a neutral solution may be made as follows: Boil a little of the substance for several minutes with a strong solution of sodium carbonate, filter, and *neutralise* the filtrate by adding HNO_3 in slight excess, boiling to expel CO_2, then adding AmOH in very slight excess, and boiling until quite neutral. The residue contains all the metals and the acids are present in the filtrate in the form of sodium salts.

Reference should be made to the reactions of the acids in neutral solution with silver nitrate and barium chloride respectively.

214. Treatment of the Insoluble Portion.

The insoluble substances include the following: SiO_2 and silicates, $BaSO_4$, $SrSO_4$, AgCl, AgBr, AgI, SnO_2, Sb_2O_4, As_2S_3 and CaF_2; also Fe_2O_3, Cr_2O_3, Al_2O_3 after intense ignition. Wash the insoluble residue well with hot water.

If the original substance has been treated with aqua regia, any silver bromide or iodide will now be changed to chloride; therefore if the residue be washed with ammonia this will be removed and may be reprecipitated by nitric acid.

If silver is found, take a little of the original substance, add H_2SO_4 and zinc, and leave in contact with the substance for 20 minutes. The silver will have been replaced by zinc, and the soluble zinc salts may now be tested for chloride, bromide and iodide.

Having removed the silver, fuse the residue on platinum foil with fusion mixture, and boil the product with water. Filter, and wash well.

Residue: May contain Fe_2O_3 (brown), $BaCO_3$, $SrCO_3$, and any unaltered SnO_2, CaF_2, etc. Boil with HCl.		*Solution*: May contain silicate, aluminate, chromate (yellow), stannate, antimonate, arsenate, sulphate, and fluoride of sodium in addition to the Na_2CO_3 and K_2CO_3 of the fusion mixture. Divide into a large and a small portion.	
Residue: Brown, Fe_2O_3. Confirm by borax bead.	*Solution*: Examine for Ba and Sr.	SMALL PART. Test for H_2SO_4. Test for silica and silicates by heating a small portion of the insoluble residue in microcosmic bead or by CaF_2 and H_2SO_4. (See tests for silicates, **194**.)	LARGE PART. Examine for metals by separation into groups, etc., removing the silica by evaporation to dryness after the removal of the copper group.

Report on the Analysis.

The results obtained in the analysis should now be summarised in a short statement setting forth the salient properties of the substance. This report should not only show the radicals (positive and negative ions) which are present, but should indicate, from a consideration of properties such as colour, crystalline form, deliquescence, solubility in various solvents, reaction to litmus, etc., the nature of the compounds which are actually present in the original substance.

QUALITATIVE ANALYSIS OF ORGANIC SUBSTANCES.

215. If these are present in a mixture with inorganic matter, the analysis becomes more complicated on both parts. In the examination for metals, organic matter must in general be destroyed (**204**) as it interferes with the precipitation of certain metals. On the other hand, organic substances are most easily detected in the absence of inorganic salts, and the examination for organic acids should be made in a solution containing no metals other than those of the alkali group. The preparation of such a solution is described hereafter. In the following scheme, the substance under examination is assumed to be entirely or mainly organic. The tests are applied not necessarily in the order given ; a little experience will suggest the best method for each case.

Detection of the Elements.

The elementary composition of a substance affords valuable suggestions as to its nature, and the following tests should always be made, unless other evidence renders them unnecessary.

Carbon and Hydrogen. These elements may be assumed to be present, but may be detected by heating a little of the substance with a few grams of dry copper oxide, or lead chromate (if sulphur or halogens are

suspected), and passing the evolved gas into lime water or baryta water. A white precipitate of carbonate is formed, and moisture condenses on the cooler part of the tube.

Carbon and hydrogen alone are present in the hydrocarbons. In addition to these, oxygen is present in the carbohydrates, alcohols, phenols, aldehydes and ketones, esters, and carboxy-acids.

Nitrogen. This element is present in the proteins, amino-acids (glycine), amides and amines, alkaloids and purine derivatives (uric acid).

1. Some of these evolve ammonia or alkaline and pungent smelling vapours on being heated in a test-tube with soda-lime.

2. Cyanide test. Heat a little of the substance in a dry test-tube with a small pellet of metallic sodium until all action has ceased. When cool, add 2 or 3 c.cs. alcohol to remove the excess of sodium, and wait till no more hydrogen is evolved. Add water, boil and filter; divide the filtrate into three parts. Retain two parts to test for sulphur and halogens (below). To the other part add a little $FeSO_4$ solution, and then a few drops of $FeCl_3$ solution, and acidify with dilute HCl. A blue or blue-green colour, or a ppt. of Prussian blue, indicates the presence of nitrogen.

Sulphur is present in the proteins, mercaptans and thioethers, sulphonic acids, etc.

1. To one third of the solution from the sodium fusion (above) add a few drops of sodium nitroprusside solution. A violet coloration indicates sulphur.

2. Mix about half a gram of the original substance with a gram of KNO_3 or Na_2O_2, and 3 grams fusion mixture, and fuse in a porcelain crucible until all carbon is burnt away. On cooling, dissolve in water and divide into two parts. Keep one part to test for halogens; to the other add HCl in slight excess, and $BaCl_2$ solution. A white ppt. of $BaSO_4$ indicates sulphur.

Phosphorus. To the other portion of the solution from the peroxide fusion, add HNO_3 and excess of ammonium molybdate, and warm. A yellow ppt. of ammonium phosphomolybdate indicates phosphorus.

The Halogens. 1. The remaining one third of the solution from the sodium fusion is acidified with HNO_3 when the addition of $AgNO_3$ solution will indicate the presence of halogens. These may be distinguished by the method given in **181**.

2. Most halogen derivatives, when heated on the end of a copper wire previously oxidised in the bunsen flame, give a bluish-green colour.

Metals. Heat a little of the substance on platinum foil or a silica or porcelain tray until all carbon is burnt away. Any residue will consist of alkali carbonates or the oxides of heavy metals. Moisten with water and test with litmus paper. Add a drop of HCl and note whether CO_2 is evolved. The metals present are detected in the ordinary way (**202**), and heavy metals must be removed before testing for the organic acids.

Some of the above tests may be difficult or impossible to apply to volatile substances in the manner described. In such case a modification of the test may be devised, or other evidence relied upon for the identification.

The action of heat and some general reactions.

1. In the case of liquids, evaporate a little carefully on a watch-glass or porcelain dish. Note whether inflammable vapours come away (most volatile liquids), acid fumes (formic, acetic), and observe the nature of the flame. Also whether a residue is left, and its nature. A syrupy residue with sweetish taste will indicate glycerol or sugars. Formaldehyde (formalin) leaves a white amorphous residue. Solutions of solid organic substances, in water or other liquids, will leave a solid residue, which may then be examined further.

2. Heat the substance alone in a dry tube.

Substance melts and chars: emits smell of burnt sugar.	Sugars, tartaric or citric acids. Starch chars without melting.
Irritating vapours are evolved.	Citric, oxalic, succinic acids: glycerol.
Substance melts and forms a white sublimate.	Free oxalic, succinic, benzoic or salicylic acids. phenol.
Substance melts and evolves ammonia.	Urea and ammonium salts: uric acid does not melt, but chars, emitting NH_3 and HCN.

Phenol and aniline give characteristic odours.

3. Heat the substance with 3 or 4 times its weight of powdered soda lime:

An inflammable gas is evolved.	Formic, acetic, oxalic or benzoic acids: the last gives benzene.
Ammonia liberated, or alkaline vapours.	Urea, amides, uric acid. aniline, alkaloids, glycine.
Odour of aniline.	Aniline (or salts) · acetanilide.
Odour of phenol.	Phenol or salicylic acid.

4. Mix the substance with cold concentrated H_2SO_4.

CO evolved.	Formate.
Smell of acetic acid.	Acetate.
Now warm gently:	
CO and CO_2 evolved, charring and odour of burnt sugar, with CO_2 and SO_2 liquid, darkens slowly, odour of burnt fat (acrolein).	Oxalate, citrate, urate, sugars, starch, tartaric acid; citrates and succinates char slowly; benzoate, salicylate; glycerol.

Physical properties, such as melting point, boiling point and specific gravity, are of great importance (Part I. C, p. 134), and should be used finally to identify a pure substance. Two liquids may usually be separated by fractional distillation (**117**), the boiling points being noted, or a liquid may be separated from a solid in this way.

The melting point of a solid should be compared with that of the substance it is supposed to be, and at the same

time the melting point of a mixture of the two should be taken. If the two are identical, the melting point will not be affected; if not, the melting point will in general be depressed.

The **odour** is very characteristic for many substances, such as alcohols, ethers, ethereal salts, and should be carefully observed, as well as the colour and general appearance.

The **solubility** should be examined carefully. Shake up a little of the substance vigorously with cold water, and if necessary separate the aqueous layer from the remaining liquid, or filter from the remaining solid. Test the aqueous liquid with litmus: an acid reaction will indicate free acids or acid salts, such as bitartrates, aniline salts or some alkaloid salts; an alkaline reaction may indicate alkali salts of some organic acids, or basic substances. The aqueous solution will also contain the simpler alcohols and aldehydes, glycerol, acetone, phenols, sugars. Insoluble or sparingly soluble in water are the hydrocarbons, ethers, the higher aliphatic alcohols and aldehydes, ketones and esters; aromatic derivatives of these classes, starch, alkaloids and aromatic bases.

If an alcohol, aldehyde, or acetone is suspected from the solubility and the smell, it should be confirmed by the special tests already given (Part I, B, p. 72). Chloral hydrate, an odourless solid, soluble in water, behaves as an aldehyde, and will have indicated chlorine in the detection of elements. Ethereal salts are generally insoluble and must be saponified (**125**), the alcohol distilled off and oxidised to aldehyde or acid for identification, and the alkaline residue in the flask examined for the original acid.

Glycerol if present may be recovered from the aqueous solution by careful evaporation, and confirmed by the borax or acrolein tests.

If the substance does not dissolve in cold water, try the effect of hot water. Starch is converted into a paste, which on cooling gives a blue colour with iodine solution. Confirm by hydrolysis to glucose.

Further, warm the substance insoluble in water with solution of NaOH or KOH. Aromatic acids and phenols dissolve: NH_3 is evolved from urea, acid amides, and ammonium salts. Urea is confirmed by its special reactions, amides boiled until decomposition is complete, and the acids identified as described below.

If nitrogen is present, and no ammonia is evolved on boiling with alkalies, aniline, acetanilide, uric acid, glycine or alkaloids may be present, and may be detected by their specific tests. Aniline is liberated from its salts by alkalies, and may be removed from the solution, in cases where it interferes with the detection of other substances, by distilling with steam or extracting the cold solution with ether. Acetanilide is a substituted amide, and under the treatment with alkali decomposes into aniline and alkali acetate. The aniline, in this case also, may be extracted, and the residual alkaline liquor tested for acetate. If no aniline is found, the substance may be glycine (see this).

A scheme for the detection of the commoner alkaloids is given later.

If the substance is insoluble in alkali, the smell may indicate benzyl alcohol or benzaldehyde, which may be identified by their special reactions, and by oxidation to benzoic acid. Ether also gives none of the above reactions, and may be identified by smell and boiling point; hydrocarbons, if present, will probably be aromatic, and may be converted into nitrocompounds (nitrobenzene).

Halogen derivatives as a rule are insoluble in alkali ($CHCl_3$, CHI_3, C_2H_5I), and are recognised by physical and other tests, which are given for each. They are, however, decomposed on boiling with alkali. Chloral hydrate thus readily decomposes into chloroform and a formate. If none of these is present, and yet the substance contains chlorine, chloracetic acid may be looked for (see this, p. 92).

Detection of Organic Acids.

216. If the substance does not dissolve in water, free benzoic or salicylic acids may be present. These will

dissolve on addition of NaOH or Na_2CO_3. If insoluble in alkali, salts of heavy metals may be expected. In this case dissolve in the minimum of dilute HCl, or HNO_3, add excess of Na_2CO_3 solution and boil. This precipitates the heavy metals, and at the same time liberates aniline and the alkaloids from their salts. Phenol does not unite with alkali carbonate. These, if present, should be extracted with ether before proceeding with the analysis.

In some cases however, the metals are not precipitated by Na_2CO_3, as Hg in presence of cyanides, Sb in tartar emetic, Fe, etc., in presence of tartaric or citric acids or sugars. In such cases the metals must be removed by treatment with H_2S first in acid and then in ammoniacal solution, and this followed by boiling with sodium carbonate. The filtrate is then rendered neutral by adding HNO_3 in slight excess, boiling to expel CO_2 and H_2S, making slightly alkaline with AmOH, and finally boiling till quite neutral.

Calcium Chloride Group.

To a portion of the neutral solution add acetic ocid, and cool well. A precipitate of potassium hydrogen tartrate may be produced, if K_2CO_3 was employed instead of Na_2CO_3. Filter. To the filtrate add $CaCl_2$ solution in excess.

An immediate white precipitate of calcium oxalate indicates **Oxalic acid.** Confirm by placing the precipitate in dilute sulphuric acid, warming to 70°, and adding a solution of $KMnO_4$ drop by drop. This is decolourised by Oxalic acid.	To the filtrate add AmOH in slight excess, cool, shake well and allow to stand for 15 minutes. A white crystalline precipitate of calcium tartrate separates. Confirm by warming a portion of precipitate with H_2SO_4 and a small quantity of pyrogallol. Violet colouration indicates **Tartaric acid.** Confirm also by the reduction of ammoniacal silver solution.	To the filtrate add more calcium chloride if the other acids have been found, and boil to a small bulk; a white precipitate gradually forming indicates **Citric acid.** Confirm by warming the precipitate with strong H_2SO_4. Citric acid is slowly charred.

Ferric Chloride Group.

To another portion of the neutral solution add neutral ferric chloride solution, observing first the effect of one drop of the reagent. A distinct yellow colour is given by aliphatic hydroxy-acids, as lactic, malic, citric, tartaric. With excess of ferric chloride :

A red-brown colour	—Formate, acetate, chloracetate or glycine : on boiling, the brown basic ferric salt is pptd.
A violet colour	—Salicylate or phenol.
A buff-coloured ppt., soluble in AmOH.	—Benzoate.
A bulky brown ppt.	—Succinate.

If a ppt. is obtained with $FeCl_3$ in the cold, filter and boil the ppt. with AmOH ; filter :

Residue is a more basic succinate.	Solution contains some ammonium succinate or benzoate Add an equal bulk of alcohol and a little $BaCl_2$. A white ppt. indicates succinate (benzoate gives no ppt).

These acids may be confirmed by special tests, such as

Formic acid	—Reducing properties.
Acetic	—Ethyl acetate reaction.
Chloracetic	—Detection of chlorine in the ppt.
Glycine	—Detection of NH_2 group in the ppt.
Salicylic acid	—Ethyl or methyl salicylate : Br water.
Phenol	—Br water ; Liebermann's test.
Benzoic acid	—Ethyl benzoate reaction.
Succinic	—Resorcinol test.

These confirmatory tests are described among the reactions for the several acids, and reference should be made to them when required.

Carbohydrates. If more than one of these be present in the same solution, they may be detected as follows :

To a neutral solution add a few drops of iodine solution :

Blue colour—starch. Confirm by hydrolysis followed by reduction of Fehling's solution.	If starch is present, extract soluble sugars from the original substance with cold water and filter ; to this filtrate, or to the prepared solution if starch is absent, add Fehling's solution and warm.	
	Red ppt. of Cu_2O Glucose. Confirm by the osazone and fermentation tests.	If glucose has been found, boil with Fehling's solution until no more ppt. is thrown down. Filter. Apply the inversion test for cane sugar, followed by Fehling's test.

The Alkaloids.

217. These if present should first be isolated by careful addition of NaOH or AmOH to the aqueous or HCl solution of the substance.

The ppt. is filtered and washed with cold water. Test this ppt. as follows :

1. Place a little in a porcelain basin, and stir with a drop of strong HNO_3. An intense red coloration indicates.

Morphine.	*Brucine.*
Unchanged by $Na_2S_2O_3$ Confirm by reactions with (*a*) $FeCl_3$—blue colour. (*b*) HIO_3—brown colour.	Changed to violet by $Na_2S_2O_3$. Confirm by (*a*) $FeCl_3$—no result. (*b*) $Hg_2(NO_3)_2$—warmed, gives a carmine colour.

2. Mix the powder with strong H_2SO_4 and rub with a crystal of $K_2Cr_2O_7$—purple colour changing to red indicates **Strychnine.**, Confirm by adding a few c.cs. of sulphovanadic acid to a little of the substance. Blue to violet colour, turning red on warming.

3. Fluorescence of the solution in dilute H_2SO_4, indicates **Quinine.** Confirm by

(*a*) Chlorine water followed by AmOH—green colour.

(*b*) Chlorine water, then a few drops K_4FeCy_6, then a slight excess of ammonia—a deep red colour, quickly changing to dirty brown. Morphine interferes with this test.

4. To the solution in dilute H_2SO_4 add Cl water in excess, and then AmOH—yellowish white ppt. indicates **Cinchonine.** Confirm by the ferrocyanide reaction.

EXAMINATION OF COMPLEX CYANIDES.

218. Such compounds as Prussian blue are insoluble in dilute mineral acids, and even when they are decomposed by caustic alkalies the complex anions remain in solution, and the metals which they contain are not detected by the usual analytical reactions. They may be examined as follows :

Before testing for bases, double cyanides should be destroyed and the cyanogen completely removed from the substance. Mix a suitable quantity of the material with three times its bulk of a mixture of one part of ammonium nitrate and two of ammonium sulphate, and ignite in the fume chamber until the reaction is complete and all ammonium salts are volatilised. The cyanogen is oxidised to CO_2 and free nitrogen, while the metals, including those originally present in the anions, remain as sulphates or oxides. Dissolve the residue in dilute HCl, and examine for bases in the usual manner.

Barium or strontium will of course form insoluble sulphates, and will require fusion (**214**).

Mercury and arsenic are volatile, and may be completely expelled during the ignition. They are, however, easily detected by the dry tests, which give conclusive evidence regarding these metals.

To detect the acids, boil a portion of the substance with sodium hydrate and a little solid sodium carbonate, the latter being required to precipitate Pb, Zn or Al, since the hydroxides of these metals are soluble in caustic soda. The precipitate contains hydroxides or carbonates of most of the heavy metals present, and may be neglected. The filtrate contains the

soluble sodium salts of hydroferro- and hydroferricyanic acids and of thiocyanic acid. Acidify the filtrate with HCl, and add excess of $FeCl_3$. A precipitate of Prussian blue indicates hydroferrocyanic acid. Filter. A deep-red colour, or even a red tinge, in the filtrate indicates thiocyanic acid. To test for hydroferricyanic acid, which is rapidly reduced in presence of alkali to hydroferrocyanic, allow the first few drops of the filtrate to fall into an acidified solution of $FeSO_4$. A deep-blue precipitate of Turnbull's blue indicates the presence of hydroferricyanic acid. Confirm these by the reactions with $AgNO_3$.

PART II.

INTRODUCTION.

219. In Qualitative Analysis the chemical nature of the constituents of a mixture or of a compound is investigated, by converting those constituents into well-known and easily recognisable forms.

In Quantitative Analysis the same principles are involved, and the methods by which the quantitative determination of an element is carried out, are based upon the same reactions which serve for its qualitative recognition. The reactions selected, however, for quantitative work, must admit of the measurement of the amount of the constituent to be determined, either by converting it into a product which is of known composition, and can be weighed, or by measuring the volume of a prepared solution required to bring about the selected reaction.

The first is the **gravimetric** method, in which the substance to be determined is converted into another, of known composition, which is then accurately weighed. From this weight, the amount of the required constituent can be calculated.

The second is the **volumetric** method, in which solutions are employed, one containing the substance to be estimated, the other a known amount of a substance which has a definite reaction with the substance under examination. The volume of this second solution is measured, care being taken that the end of the reaction is sharply observed. This is usually attained by means of an **indicator**, such as litmus or methyl orange in acidimetry and alkalimetry.

Volumetric methods in general can be rapidly carried out, and require only simple apparatus. In many cases they admit

also of great accuracy. On the other hand, gravimetric methods are often tedious and cumbersome, and at times require elaborate apparatus. For rapidity of work, a volumetric method is to be preferred when one is available.

In all kinds of quantitative work, the most scrupulous care must be exercised to avoid possible errors; and if any slight error is even suspected, the experiment should be discarded and a new one commenced.

THE MEASUREMENT OF MASS.

220. The Balance. One of the operations most frequently carried out by the analyst is that of weighing. All quantitative experiments, whether gravimetric or volumetric, depend in the first instance upon this operation, which is therefore of very

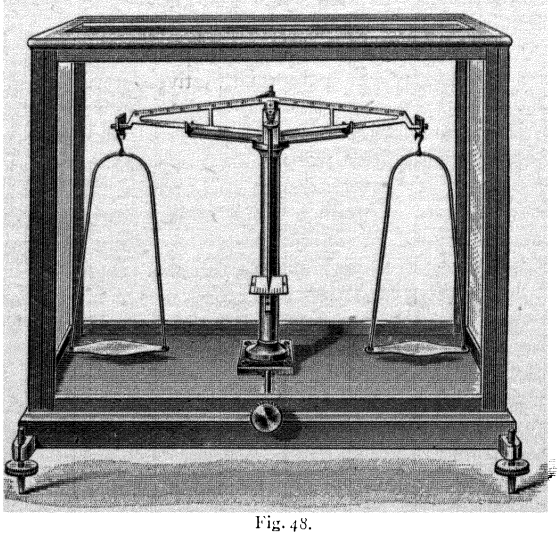

Fig. 48.

great importance. It can be carried out with great precision, this depending on the form of balance used, in the manner about to be described.

Only the special features of the chemical balance, a general view of which is shown in Fig. 48, will be considered here. To eliminate friction as far as possible, the turning centres at the middle and ends of the beam consist of knife-edges of agate, bearing on plates of the same material. A method of suspension of the pan is shown in Fig. 49. When the balance is out of use, the knife-edges are not in contact with the plates, the beam being supported upon arms from the central pillar. By turning the lever in front of the balance, these supports are caused, by means of a small crank or cam, to be withdrawn from the beam, which then rests on its knife-edges and is thus placed in action. The beam must always be supported while

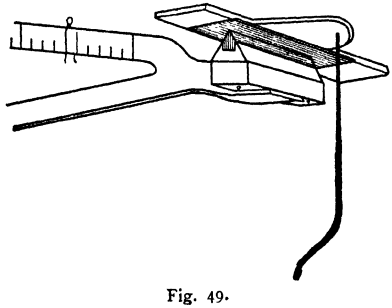

Fig. 49.

the weights or other articles on the pans are being changed. The movement of the beam is indicated by a pointer which descends at a right angle from the middle of the beam to the scale near the foot of the pillar. When the balance is in proper adjustment the beam should come to rest in a horizontal position, and the end of the pointer is then opposite the middle of the scale, the pointer, the central knife-edge, and the middle line of the scale being all in the same vertical plane. The centre of gravity of the beam and its appendages is of course also in this plane, and should be below the fulcrum or central knife edge, and as near to it as is practicable. Since the arms of the balance are precisely equal in length, and the pans with their supports should be of exactly equal weight, their interchange or removal, or the placing of equal loads in the pans, ought not to affect

this equilibrium position of the beam and pointer. The coincidence, however, of the pointer with the scale centre is only realised if the balance is perfectly level, and any error in this respect must be rectified by means of the screws on the three supporting feet, before any other adjustment is made. An error in the zero may then be due to one or more of several causes:

1. a mechanical defect in the placing of the pointer or scale or both;
2. inequality in the lengths of the arms;
3. a discrepancy in the weights of the two sides of the balance, arms or pans.

Further reference to these defects is made in the description of the methods of weighing, par. **221.**

The zero may be adjusted, if desired, to coincide with the middle division of the scale by moving a small horizontal arm centred above the beam on the vertical axis, or a small nut moving horizontally above the beam from right to left. An exact coincidence, however, of the zero point with the centre of the scale is not absolutely necessary for correct weighing, since the zero is determined before each series of weighings, especially if the balance is used by more than one person.

The balance is enclosed in a glass case, the front of which, and usually also the back and sides, can be opened. The case must be kept closed to exclude dust, fumes, etc., and should contain a small glass dish of calcium chloride to keep the atmosphere dry. The case is supported on three metal feet, which can be raised or lowered with screws, so that the balance may be levelled. The table on which balances are supported should be as rigid as possible, preferably one built into an external wall.

Many details of the construction of the balance, which have not been described, will readily be understood by examining the one in use.

The sensibility of the balance, that is, the degree to which the beam is displaced by a very small difference between the weights in the two pans, depends on several conditions. These may be briefly explained from the diagram (Fig. 50).

Let *ACB* represent the beam, the knife-edges being at those three points. Draw the horizontal line *aCb*, and the vertical lines *aA*, *cG*, *Bb*. *G* is the centre of gravity of the beam.

including the pans and their loads. Let W be the total weight of beam, pans, etc., P and $P+p$ the loads on the pans suspended from B and A respectively. And let the angle aCA, through which the beam is displaced by the small difference p in the loads, when equilibrium is reached, be called θ.

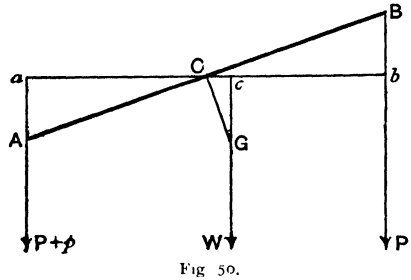

Fig. 50.

Then since the sum of the moments about C is zero, we have

$$(P+p)\times aC = P\times bC + W\times cC\,;$$

$$\text{but } aC = bC\,; \quad \therefore\ p\times aC = W\times cC.$$

$$\text{Now the } \angle cGC = \angle aCA = \theta\,;$$

$$\therefore\ aC = AC\cos\theta \ \text{ and } \ cC = CG\sin\theta\,;$$

$$\therefore\ \frac{p}{W} = \frac{CG\sin\theta}{AC\cos\theta}\,; \quad \therefore\ \tan\theta = \frac{pAC}{WCG}.$$

Hence tan θ, and therefore also the angle θ through which the beam is turned, is independent of the load P in each of the pans; it is increased by increasing p, the excess load in one pan, by increasing the length of the beam, by diminishing W, the weight of the beam, and by diminishing the distance of the centre of gravity from the knife edge. The latter also increases the time of swing of the beam.

In practice these conditions are mutually antagonistic, and a compromise has to be effected. To ensure lightness, the beam is usually made with the central portion removed, which can be done without much loss of rigidity. The beam is also frequently made of aluminium or magnalium (an alloy of aluminium and magnesium), each having a low density. To lessen the time of swing of the beam, and therefore the time occupied in a weighing, the beam is shortened. This of course diminishes the

sensibility, but the latter disadvantage is counterbalanced by making the depth of the centre of gravity below the knife-edge as small as is compatible with the stability of the balance.

This depth, and therefore also the sensibility of the balance, can be adjusted at will by raising or lowering a nut which turns, above the beam, on the central vertical axis.

In the foregoing discussion it is assumed that the three knife-edges are in one plane, which is the aim in all delicate balances. If this is not so, the sensibility will vary with the angle of displacement, that is, with the load, and will be increased if the fulcrum lies below the plane containing the terminal knife-edges, and diminished in the contrary case. The latter is the more usual, especially as the beam tends to bend slightly with the load. The accompaning diagram (Fig. 51) serves to illustrate these relationships. The fulcrum is again at C, but the terminal knife-edges are now at A' and B' (compare Fig. 50), this being the condition under discussion. We now have

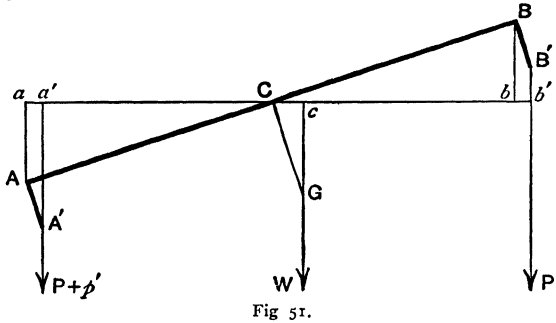

Fig 51.

$$(P+p')\,a'C = P \times b'C + W \times cC\,;$$

since in this case now $a'C$ is $< Cb'$,

it is clear that the additional weight p' required to produce the same angular displacement θ, is greater than p (Fig. 50). when all three knife-edges are in one plane, and that the difference $(p'-p)$ increases with the displacement, that is, the sensibility diminishes with the load. Some makers arrange that in the unloaded balance the fulcrum is slightly below the plane containing the terminal knife-edges, and that the average load is just sufficient to bring the three into one plane.

The weights are arranged in a series from one gram up to 50 or 100 grams, or more, being usually made of brass and lacquered, gilded or platinised. An inspection of the box will show that any whole number can be made up within the limitations of the set. The fractional parts are arranged in corresponding values, and are made of platinum, gold, aluminium or other metal. The weights must be very carefully handled, always moved by means of the forceps, and never touched with the fingers; and they must be carefully protected against acid or other fumes, and dust. A slight tarnish, which usually appears after a time, has practically no effect on the weight, and this must on no account be rubbed off, or the weights will no longer be accurate.

It is customary in weighing to make up the value with the small weights to a centigram, and beyond this to use the rider, which is made of gold or platinum wire, and weighs one centigram. This is moved along the graduated beam until the exact counterpoise is attained. Thus the position of the rider on the beam completes the measurement to one tenth of a milligram. For still more accurate work milligram weights are used on the pan, and a milligram rider on the beam, by which means the weight is measured to one hundredth part of a milligram. For ordinary work, however, the centigram rider is quite sufficient. In some balances a bar fixed in front of, and parallel with the beam, is graduated for the whole length of the beam, beginning at one end instead of at the centre. A half centigram rider is then used, and the balance is in equilibrium when this is placed on the zero of the bar, that is, over the left-hand pan. A movement of the rider to the centre, which is marked 5, is thus equivalent to adding five milligrams, and the right-hand end records ten milligrams. The scale is thus more open, and greater accuracy is attainable.

To test the weights, the values of the several pieces should be carefully compared in terms of one of their number. The balance is first accurately adjusted so that the pointer is precisely at the zero of the scale. One of the gram weights is placed on the pan, and exactly counterpoised by placing brass clippings or fine wire on the other pan. When this has been done, the gram is replaced by another, and any deviation of the pointer noted. Since the value in milligrams of one

scale division is known (**221**), the difference in weight between these two one gram pieces is thus determined. The third gram is examined in the same manner, the two gram piece with two one grams, the five with two and three ones, and so on. The fractions may be dealt with in a similar manner, and all together compared with the one gram.

The accuracy of the weights is usually greater than is required for ordinary quantitative work, but any errors should be known and allowed for when necessary.

221. The process of weighing. The student should be acquainted with the capabilities of the balance he is using, and should determine the sensibility with the pans empty, and then with loads of 25 and 50 grams in each pan. This may be done, and indeed the final approximation in all weighings should be made, by the **method of oscillations.** When the beam is released, the amplitude of vibration will be found to diminish very slowly, and a long time would elapse before the pointer finally came to rest, and so indicated the position of the zero. Instead of this, the position of the pointer on the scale is read at an odd number of turning-points, 3, 5, or 7, and the mean value found, those to the right being marked + and those to the left −. It is easy to read to one-half, or with a little practice to one-tenth, of a scale division This mean value is the position of equilibrium, or the zero, for the unloaded balance In an actual observation, the rider being at the middle of the beam, the readings were

$$-9{\cdot}3,\ 7{\cdot}5,\ 6{\cdot}1, \qquad \text{mean} = -7{\cdot}63,$$
$$+6{\cdot}2,\ 4{\cdot}8, \qquad \text{,,} = +5{\cdot}5.$$

The zero point is thus $-1{\cdot}06$.

The rider was then moved to the first division to the right, making an addition of 1 mgrm., and the readings were then

$$-12{\cdot}0,\ 10{\cdot}4,\ 9{\cdot}1, \qquad \text{mean} = -10{\cdot}5,$$
$$+1{\cdot}1,\ -0{\cdot}4, \qquad \text{,,} = +0{\cdot}35.$$

The zero is therefore $-5{\cdot}075$, that is, it has been moved $5{\cdot}075 - 1{\cdot}06$ or $4{\cdot}015$ divisions by the addition of 1 mgrm. The sensibility of the unloaded balance is therefore $4{\cdot}015$ divisions for 1 mgrm., or 1 scale division $= 0{\cdot}25$ mgrms.

In a similar manner the sensibility for 1 mgrm. with 25 grams

on each pan was found to be 4·105, and with 50 grams, 3.75, or the value of one scale division is 0·24 and 0·27 mgrms. respectively. In this case the sensibility diminishes slightly with a heavy load, as we should expect.

When the weight of a body has been found approximately, so that the pointer swings within the limits of the scale, the equilibrium point may then be found by the method of oscillations, and from the difference between this and the zero of the unloaded balance, the exact weight may be computed by adding the corresponding value in mgrms.

The method of **direct weighing** usually employed does not as a rule give the correct weight of an object. Any inequalities in the two sides of the balance will interfere with this; if, however, one always places the weights in the same pan, say that on the right, then the differences—and most working numbers are differences—are sufficiently correct for most purposes. The true weight, however, may be found by one of the following methods.

The method of **reversal** or interchange (*Gauss's* method) overcomes the error due to inequalities in the two sides of the balance. In this method the body is weighed first in one pan and then in the other. Let W be the true weight of the body, w_1 and w_2 the observed weights in the two pans respectively, and a and b the lengths of the arms; then

$$Wa = w_1 b, \quad \text{and} \quad Wb = w_2 a;$$
$$\therefore\ W^2 ab = w_1 w_2 ab, \quad \text{or} \quad W = \sqrt{w_1 w_2}.$$

Thus the true weight is the geometrical mean of the two observed values; if the latter are near each other, the arithmetical mean, $\frac{w_1 + w_2}{2}$, is sufficiently accurate.

The method of **substitution** or counterpoise (*de Borda's* method, also gives the true weight. In this method the body to be weighed is placed on one pan, with an approximate counterpoise on the other. Weights are then added to one side until an exact balance is secured. The body is now removed, and known weights added in its stead, until the balance is restored. The weights thus added give a measure of the true weight.

The **weight in vacuo** is required for very accurate work.

On account of the buoyancy of the air, the effective weight of a body is less than the true weight, by the weight of the air displaced, and corrections must be applied in this sense both to the object and to the weights used to counterpoise it. When these are of approximately equal volume the correction is negligible ; but when the body to be weighed is bulky, as, for example, in weighing gases in large globes, it becomes imperative to reduce all weighings to vacuum.

222. Weighing bottles. When a substance is ready for analysis, it is placed at once in the weighing bottle. Some forms of this are shown in Fig. 52. The bottle should be of

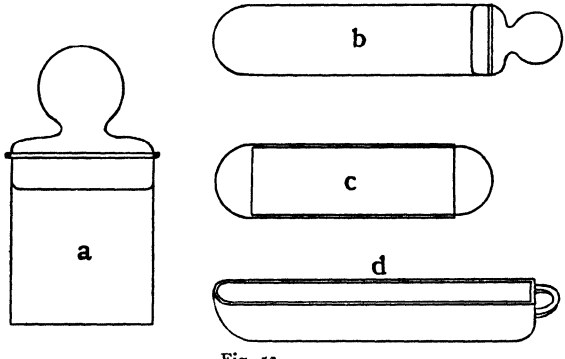

Fig. 52.

one diameter throughout, as *a*, *b*, and the ground glass stopper should not be cut, but blown from a glass tube, the flattened under side being retained. The two plain tubes shown at *c*, one fitting into the other, make a convenient form of weighing vessel for dried filters, etc. For insertion into a glass tube, a **boat** (Fig. 52, *d*) is often employed, as in the reduction of copper oxide (**71**), or the ignition of antimony sulphide (**311**). These boats are made of porcelain, glass, or platinum.

In addition to these, watch-glasses, porcelain dishes and crucibles, etc., may be used for weighing a substance. On no account should the substance to be weighed be placed directly on the pan.

Before weighing, a vessel must always be allowed to acquire, as nearly as possible, the temperature of the balance-room. With this object it is allowed to stand in the desiccator (**20**), in which also the weighing bottles should be kept.

THE MEASUREMENT OF VOLUME.

223. Flasks. In volumetric analysis, vessels are required which have an accurately known volume. These are of various kinds. For adjusting the volume of a solution, the measuring flask (Fig. 53) is best. This is a flask with a long, narrow neck, fitted with a ground-in glass stopper. The flask contains the definite volume marked on the side, when filled to the mark etched round the neck. It is important to remember that these flasks *contain* the quantity indicated, and that when the liquid is poured out, a little always remains adhering to the sides of the vessel. The volume is ascertained by weighing with water at a known temperature, which is indicated on the flask. It is only correct at this temperature.

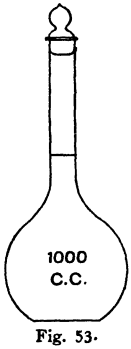

Fig. 53.

For an approximate measurement of the volume of a liquid, the measuring cylinder (Fig. 54) may be used.

224. Burettes. A burette is a graduated glass tube, from which liquids may be run by means of a tap at the bottom, and the quantity run off is thus measured. The tap may be of glass, or made by a short piece of rubber tube closed by a clip, and terminating in a glass jet, as shown in Fig. 55, which represents the usual forms of Mohr's burette. For some liquids, as solution of potassium permanganate, the rubber tube should not be used. The burette is held in a stand, so that the volume of the liquid may not be affected by touching the tube with the hands. The diameter of the tube should be uniform, and as the graduations are often made by linear measurement, any lack of uniformity in

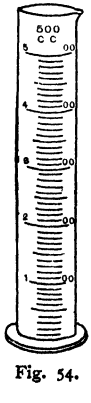

Fig. 54.

this respect will introduce an error. Such error can be detected and corrected by calibration (**226**).

To read the burette it is important that the eye of the observer should be on the *same level* as the surface of the liquid, the position of which is to be read. Since the surface of the liquid is concave, it is essential to read always the position of the same portion of the surface. The bottom of the meniscus is the most clearly defined position, and as this is several millimetres behind the graduated wall of the burette, it is obvious that any change in the level of the eye will cause also a change in the reading. Many devices are employed to obviate this difficulty. The float is one of these (Fig. 55), and consists of a closed tube, fitting easily into the burette, with a circular mark etched on it, and loaded with a little mercury, so that it just floats in the liquid with the top projecting above the surface. The position of the etched circle on the float is then easily seen on the graduated tube.

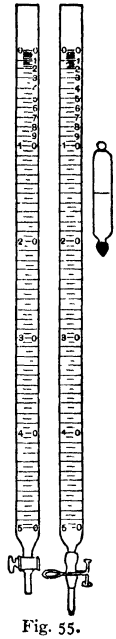

Fig. 55.

The burette is usually graduated in tenths of a cubic centimetre. When liquid is run from the burette, the sides of the tube remain wet with the liquid, and this slowly drains down. It will be found that on standing, the level of the liquid slowly rises by a small amount, and it is therefore necessary always to work at the same speed, and to read the burette after a constant interval of time.

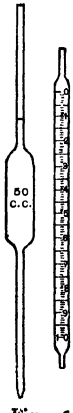

Fig. 56.

225. Pipettes. The pipette is employed for removing measured quantities of liquids from other vessels, and consists of a long tube, with or without a bulb at the middle, and having a circular mark etched on the upper straight portion. The lower end is contracted to a narrow opening. This form of pipette, and also the straight graduated form, is shown in Fig. 56. The pipette *delivers* the volume of liquid it is graduated for, and when this has run from it, a little

still remains in the lower end of the stem. As soon as the running has ceased, the end of the tube should be brought in contact with the liquid which has left it, and thus a little more is removed from the tube. The few drops which still remain are left in the tube, as they are taken into account in marking the pipette. By working always in the same manner, great uniformity in results can be attained.

The pipette is graduated at the temperature marked upon it, and may not be accurate at other temperatures. The correctness or error of the pipette should always be determined by calibration.

226. Calibration of apparatus. By this term is meant the measurement of the error, if any, in the graduation of volumetric apparatus. One possible cause of such error in the case of the burette has already been mentioned. The method of calibration generally adopted is to fill the instrument to the mark with distilled water at a known temperature, or with mercury, and find the weight of this water or mercury. From the known density of water at the working temperature (see appendix, **397**) the exact volume can be calculated.

Measuring flasks are weighed empty, then filled with the water and weighed again. The pipette is calibrated by running the water into a weighing bottle, emptying the pipette in the manner which is to be adhered to afterwards (**225**), and then weighing the water. In the case of the burette, the water is run out into the weighing bottle 5 c.cs. or 10 c.cs. at a time, and each quantity carefully weighed. The error at each 5 or 10 c.cs. can then be calculated, and it may be assumed to vary proportionally at the intermediate points. A curve may be drawn to obtain the errors at these points.

Cleansing volumetric apparatus. In the case of burettes and pipettes, fill with a saturated solution of potassium dichromate in strong sulphuric acid, allow to stand for five minutes, run out, and rinse with water. With flasks and vessels of large capacity, pour in some of the solution, shake round to wet the sides, allow to stand, pour out and rinse.

A preliminary treatment with a strong solution of caustic potash, followed by rinsing, may be advisable in some cases. Solvents such as alcohol and ether may also be used.

SECTION I.

VOLUMETRIC ANALYSIS.

EQUIVALENTS.

227. In comparing the reacting masses of chemical substances, it is necessary to fix upon a standard unit. The unit mass of hydrogen is chosen as this standard, because in all reactions involving this element, its mass is less than that of any of the other substances concerned.

In the case of elementary substances, the equivalent is defined as that quantity which combines with, or replaces, one gram of hydrogen. Most of the non-metallic elements combine directly with hydrogen, so that the equivalent is readily determined. With metals, no definite compounds are obtained, and the method of replacement of hydrogen, by solution of the metal in acids or in alkalies, may be applied in many cases.

The same considerations are extended to compounds, such as acids, alkalies, oxidising agents, the unit for determination of equivalents being always one part by weight of hydrogen.

When direct comparison of the substance with hydrogen is not possible, its equivalent may be determined by reference to a third element of known equivalent, *e.g.* chlorine, oxygen. Thus the equivalents of metals are accurately determined by analyses of the chlorides or oxides.

Again, the proportions may be determined in which metals replace each other from solutions of their salts, as, *e.g.* copper is precipitated by zinc from a solution of copper sulphate, and the relative equivalents are thus found.

Examples of some of these methods are given below.

DETERMINATION OF EQUIVALENTS.

A. By Replacement of Hydrogen.

228. Fit up the apparatus shown in Fig. 57, *a* being a 100 c.c. flask and *b* a 1 litre bottle or flask. Fill the bottle with water, and by tilting it fill also the siphon tube *c*, and then close the clip. Put on the flask *a*, open the clip and see that the apparatus is gas tight. In the flask place a sufficient quantity of the liquid required to dissolve readily the metal whose equivalent is to be found, *e.g.* for zinc use sulphuric acid (1 : 4), for sodium use absolute alcohol, for calcium use weak hydrochloric acid. Place a weighed quantity of the metal in *a*, then quickly replace the flask on the stopper and open the clip. Collect the displaced water in a measuring cylinder. Always finish with the end of the siphon tube in the displaced water. When the action has ceased, allow the apparatus to cool to the temperature of the room, make the levels of the water in the bottle and the measuring cylinder equal, clip the tube and remove it from the water. Measure the water. Take the temperature of the gas by placing a thermometer in the water in the bottle and read the barometer to obtain the pressure. From the table (**396**) find the tension of water vapour and subtract this from the pressure. Reduce the volume of gas to N.T.P. and calculate the equivalent.

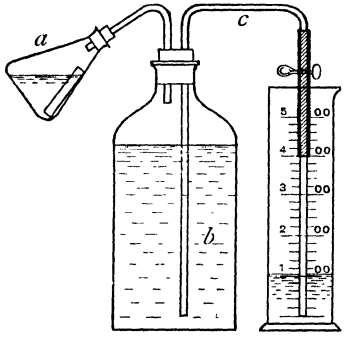

Fig. 57.

When the action is very rapid at first (*e.g.* with magnesium and carbonates), gas is liable to be lost before the flask can be placed on the stopper. To avoid this the substance may be put in a small flat bottomed specimen tube, which will rest on the bottom of the flask, and may be tilted when the flask is on. Another method is to wrap the substance in a filter paper, thus

delaying the action ; or a special bottle like that used in the experiments with the nitrometer (**367**) may be employed.

This apparatus may also be used for determining the volume of carbon dioxide liberated from a carbonate by the action of an acid (see page 101, Avogadro's Hypothesis), the water being replaced by brine, or covered with oil. A correction may also be made in this case for the volume of carbon dioxide retained by the acid (**369**).

Valuation of Zinc Dust.[1]

Weigh the zinc dust accurately into a 100 c.c. round flask, fitted with tap-funnel and two delivery tubes (Fig. 58). Cover the powder with water, and pass a stream of carbon dioxide through the flask to expel all air, collecting the gas in a measuring tube filled with caustic potash solution. When all the air is expelled, introduce from the tap-funnel a mixture of equal volumes of strong HCl and water (a few drops of $PtCl_4$ may also be added), and warm gently till the metal is dissolved. Expel the hydrogen remaining in the flask with carbon dioxide, and from the volume of gas obtained calculate the percentage of zinc in the sample.

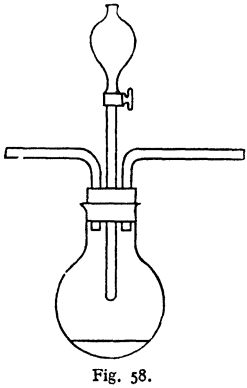

Fig. 58.

Another method, depending on the reducing power of zinc, will be given later (see par. **261**).

B. By Reduction of Metallic Oxides.

229. Many oxides of metals are easily reduced to the metal, by heating either with carbon or hydrogen. For the determination of the equivalent it is best to carry out the reduction of an accurately known weight of the pure oxide with pure and dry hydrogen. In this way copper, nickel, cobalt, etc., are readily obtained from the oxides. Examples of the procedure are given in Part I., par. **71**.

[1] Gatterman, *Practical Methods of Organic Chemistry.*

C. By Synthesis of an Oxide from the Metal.

230. This method may be used to determine equivalents, when an oxide of definite composition is obtained.

For example, by igniting a weighed quantity of magnesium in a covered porcelain crucible, magnesium oxide, MgO, is obtained, and from this the equivalent of the metal may be deduced.

Again, by oxidising with nitric acid, most metals are converted into nitrates, if the temperature is kept low, these being decomposed on ignition into oxides. Thus copper, nickel, give first the nitrates, which on heating strongly leave a residue of the oxides, CuO, NiO. Tin is converted quantitatively into the dioxide, SnO_2.

D. By Replacement of one Metal by another.

231. Weigh accurately about 0·2 gram of pure zinc foil, and place it in a 200 c.c. conical flask. Add a solution of 2 grams silver nitrate in about 50 c.cs. distilled water, and allow to stand at the room-temperature, with frequent shaking, until all the zinc has been replaced by silver. Warm gently, filter through a tared filter, and wash thoroughly on the filter. Dry and weigh the residue of metallic silver.

Assuming the equivalent of silver to be 107·88, calculate that of zinc.

E. By Solution of the Metal or its Oxide in Standard Acid or Alkali.

This method will be described later in the section on alkalimetry (**246**).

F. By Synthesis of the Chloride.

232. Weigh accurately about 0·5 gram of pure silver wire, or pure lead foil, into a small weighed porcelain dish. Cover this with a clock-glass, and dissolve the metal in as little nitric acid as possible. Rinse the clock-glass into the basin, add about 5 c.cs. of strong HCl, and evaporate to dryness to remove nitric acid. Repeat this evaporation with a little more HCl, and complete the drying by heating for half an hour in the air-bath at 150°, until the weight is constant. Taking the equivalent of chlorine as 35·46, calculate that of the metal.

ACIDIMETRY AND ALKALIMETRY.

233. In volumetric analysis solutions of known strength are used, and, knowing the reactions of the substances in these solutions with other substances, the quantities of the latter in a given mixture or compound can be determined. For example, knowing that when sulphuric acid neutralises sodium carbonate the reaction is represented by the equation,

$$\underset{98}{H_2SO_4} + \underset{106}{Na_2CO_3} = Na_2SO_4 + H_2O + CO_2$$

it is easily seen (from the molecular weights of the reacting substances) that 98 parts by weight of sulphuric acid neutralise 106 parts of sodium carbonate. Therefore, given a solution of sulphuric acid containing, say, ·05 grs. per c.c., it is evident that each c.c. will neutralise $\cdot 05 \times \frac{106}{98}$ grs. of sodium carbonate.

Any solution of known strength is a **standard** solution, but much calculation may be saved if a certain definite strength is employed, and for this reason we use **normal** (N), **semi-normal** $\left(\frac{N}{2}\right)$, **decinormal** $\left(\frac{N}{10}\right)$, etc., solutions.

A normal solution of hydrochloric acid contains the molecular weight in grams of hydrochloric acid dissolved in a litre of the solution. Normal solutions of all acids are equivalent (*i.e.* 1 c.c. of N. HCl will neutralise as much of an alkali as 1 c.c. of N. H_2SO_4), and therefore must contain the same amount of replaceable hydrogen per litre, namely, 1 gr.

Thus from the formulae and basicities of the acids we get:

	Mol. Wgt.
N. Hydrochloric acid, - - - - - -	36·5
Monobasic, contains 36·5 grs. HCl per litre.	
N. Sulphuric acid, - - - - - - -	98
Dibasic, contains 49 grs. H_2SO_4 per litre.	
N. Nitric acid, - - - - - - - -	63
Monobasic, contains 63 grs. HNO_3 per litre.	

A normal solution of an alkali is equivalent to, or equivolumetric with, a normal solution of an acid, *i.e.* 1 c.c. of the latter will neutralise 1 c.c. of the former, therefore

N. Sodium carbonate solution contains 53 grs. Na_2CO_3 per litre.
N. Sodium hydroxide „ „ 40 grs. NaOH „
N. Potassium hydroxide „ „ 56 grs. KOH „

When hydrochloric acid is added to silver nitrate, silver chloride is precipitated, and a solution of silver nitrate, of which 1 c.c. is precipitated by 1 c.c. of N. hydrochloric acid, is also normal; therefore

N. Silver nitrate ($AgNO_3$, Mol. Wt. 170) contains 170 grs. $AgNO_3$ per litre; similarly

N. Sodium chloride contains 58·5 grs. NaCl per litre.

A general definition may thus be given. A normal solution contains the equivalent weight in grams of the principal reacting element or radical dissolved in one litre of the solution. A slight modification of this definition must be made when solutions of oxidising agents are considered, but this will be explained later (see par. **247**).

To prepare standard solutions, it is necessary to (*a*) weigh out and dissolve substances of known purity, or (*b*) roughly weigh or measure quantities of substances whose degree of purity is not known and find the correct strength of the solution thus made by titrating against a solution of known strength, *i.e.* one prepared by the former method (see also par. **236**).

PREPARATION OF STANDARD ACIDS.

The strengths of the concentrated acids are not known exactly, so we must proceed by the latter method in making standard solutions of these.

They may be titrated against a standard solution (a normal solution will save calculation) of sodium carbonate prepared as follows:

N. Sodium Carbonate.

234. Heat in a weighed platinum dish about 42 grs. of pure anhydrous sodium bicarbonate, with continual stirring, and without fusing; cool in the desiccator and weigh. Repeat the heating till the weight is constant.

Take out some of the pure sodium carbonate till exactly

26·5 grs. are left. Remove from the balance, add hot water, and heat till dissolved. Cool, transfer to a 500 c.c. flask and make up to the mark. Mix well before using. The solution contains ·053 grs. of sodium carbonate per c.c. and is therefore normal.

PREPARATION AND STANDARDISATION OF SULPHURIC ACID.

235. Measure 28 c.cs. of strong sulphuric acid in a measuring cylinder, and pour into water. When cold, transfer to a litre flask and make up to one litre at the room temperature (about 15° C.). The solution will be roughly normal, since the strong acid contains, approximately, 98 per cent. H_2SO_4.

Rinse out a burette with water, then two or three times with a few c.cs. of the acid, and fill the burette with acid. Do not attempt to get the acid exactly at the zero.

Rinse a 25 c.c. pipette with water, then two or three times with a little of the N. sodium carbonate solution, and finally fill the pipette.

Run the alkali into a 250 c.c. conical flask, and then touch the surface of the liquid with the end of the pipette. Do not blow out the liquid left in the end of the pipette.

Add to the alkali one or two drops of litmus solution, read the position of the acid in the burette, enter the reading immediately in the note-book, and run the acid carefully into the flask till the litmus just turns red. Boil to drive off the carbon dioxide liberated by the acid. The litmus becomes blue again. Add more acid till the solution is turned red with one drop after boiling. Read the burette. NOTE.—Before the end of every titration the liquid on the sides of the flask should be washed down.

Methyl orange may be used as an indicator in place of litmus, as it has the advantage of not being affected by carbonic acid, and therefore the solution does not require to be boiled.

Repeat the titration, using litmus or methyl orange, till three concordant results are obtained. Average these, and calculate the strength of the acid as follows :

$$\underset{106}{Na_2CO_3} + \underset{98}{H_2SO_4} = Na_2SO_4 + H_2O + CO_2.$$

then 1 c.c. of N. Na_2CO_3 solution contains ·053 grs. Na_2CO_3;
∴ 1 „ „ „ „ will neutralise ·049 grs. of H_2SO_4.

Now suppose 24·2 c.cs. of acid have been required for 25 c.cs. of the N. sodium carbonate. These must contain

$$25 \times \cdot 049 \text{ grs. of } H_2SO_4.$$

∴ 1 c.c. of the sulphuric acid contains

$$\frac{25 \times \cdot 049}{24 \cdot 2} = \cdot 0506 \text{ grs. } H_2SO_4.$$

Another method of calculation is the following:

25 c.cs. of N. Na_2CO_3 solution neutralise 24·2 c.cs. of H_2SO_4;

$$\therefore \text{ the } H_2SO_4 \text{ solution is } \frac{25}{24 \cdot 2} \text{ of normal;}$$

$$\therefore \text{ 1 c.c. of the acid contains } \frac{25}{24 \cdot 2} \times 0 \cdot 049 = \cdot 0506 \text{ grs. } H_2SO_4.$$

236. N. Sulphuric acid. To make the sulphuric acid normal, 25 − 24·2 or ·8 c.cs. of water must be added to each 24·2 c.cs. of the sulphuric acid. Measure the acid left, in a measuring cylinder, add the calculated quantity of water and again titrate. The solutions should be equivolumetric, *i.e.* the sulphuric acid is normal. If not, again add a calculated quantity of water.

A rapid and accurate method for preparing standard solutions of sulphuric acid is that devised by Marshall.[1] Some very pure sulphuric acid is diluted with half its volume of water, and when cold, the specific gravity is determined carefully at 18° C., or 15° C., or 15·5° C. To ensure accuracy within 0·1 per cent. in the standard solution, this determination of specific gravity must be correct to 0·0005, and the temperature must be known to 0·5° C. If a Sprengel tube (**145**) of 25 c.cs. capacity be employed, the weighings must be correct to 0·01 gram. The minimum error in the standard solution caused by errors in those measurements, occurs when the strong acid contains 80 per cent. of sulphuric acid, and is 0·11 per cent. for an error of 0·001 in specific gravity, or of 0·1° C. in temperature. The concentration of this strong acid is now calculated by means of formulae

[1] A. Marshall, *Jour. Soc. Chem. Ind.* 1899, 4, 1091.

based upon the work of Pickering[1] on the S.G. of sulphuric acid solutions:

$$P = 86 \times S_{15} - 69{\cdot}00,$$
$$P = 86 \times S_{15{\cdot}5} - 68{\cdot}97,$$
$$P = 86 \times S_{18} - 68{\cdot}82,$$

where P is the percentage of H_2SO_4, and S the specific gravity. The percentages so calculated do not deviate more than 0·04 from the truth, if they lie between 66 and 81. The following general formula may be used between 0° C. and 40° C., for acids containing 62-82 per cent. H_2SO_4:

$$P = S\,(85{\cdot}87 + 0{\cdot}05\,T - 0{\cdot}0004t^2) - 69{\cdot}82,$$

where S is the specific gravity at T° C. compared with that of water at t° C.

Having found the concentration of the strong acid, the standard solution may at once be made by diluting to the required extent. If A be the number of grams H_2SO_4 per litre of the standard solution, n the number of litres to be prepared, and W the weight of acid required, then

$$W = nA \times \frac{100}{P}.$$

The acid prepared in this manner should be compared with that standardised against sodium carbonate (**235**), or against sodium hydroxide made by dissolving metallic sodium in alcohol.

237. N. Sodium hydroxide. Sodium hydroxide powder (98 per cent.) may be used. Roughly weigh out enough to make a litre of solution slightly stronger than normal, say 45 grs. Dissolve in water, and when cold, make up to a litre.

Take 25 c.cs. in a pipette, place in a titrating flask, add one drop of methyl orange solution and run in the sulphuric acid (now normal) as before. Assume 25·3 c.cs. of acid are required.

Then the alkali is $\frac{25{\cdot}3}{25}$ normal, *i.e.* 1 c.c. contains

$$\frac{25{\cdot}3}{25} \times {\cdot}040 = {\cdot}041 \text{ grs. of NaOH.}$$

If the solution is required to be normal, add ·3 c.c. of water for each 25 c.cs. of alkali.

[1] S. U. Pickering, *Trans. Chem. Soc.* 1890, 64.

Another way to prepare sodium hydroxide, which requires a little care, is to weigh accurately a quantity of metallic sodium in a stoppered weighing bottle, which has been previously weighed. Cut the sodium quickly into small pieces, removing the outer layer of hydroxide from the sticks, and place a sufficient quantity in the weighing bottle. After weighing, transfer the pieces one by one to a flask containing pure alcohol. For 1 litre of N/10. NaOH, 2·3 grams of sodium will be required, and this may be dissolved in about 25 c.cs. of alcohol. Allow each piece to dissolve almost completely before adding the next, and if necessary cool under the tap. Finally rinse out the weighing bottle with a little water several times, adding this to the flask, and make up with distilled water to a volume corresponding with the weight of the sodium used. Compare the solution so obtained with standard sulphuric acid and sodium carbonate.

In the following estimations the standard solutions will not be taken as normal. This will give the student good practice in calculation.

Indicators.

238. The indicators used in acidimetry and alkalimetry are all substances which have different colours in acid and alkaline solution. Those most suitable for exact work are weak organic acids or bases, of which the colour in one or both forms is intense, the difference in colour pronounced, and the change a rapid one, occurring as near as possible to the true neutral point.

Ostwald[1] explained the colour changes on the ionic theory; he had shown that the uniform colour of a series of salts like the permanganates is due to the coloured anion common to the whole series, and is independent of the colourless cation. In all indicators, however, structural changes also occur in the formation of salts, as with phenolphthalein and methyl-violet, and these precede, or are prac-

[1] *Zeit. Phys. Chemie*, **9**, 579 (1892); *Foundations of Analytical Chemistry*, 1894.

tically simultaneous with, the ionic changes. The latter alone would not account for the colour. Hantzsch [1] has expressed the view that all indicators are either pseudo-acids or pseudo-bases, structural change occurring with both in the formation of salts.

Phenolphthalein is a very weak acid. It is very slightly dissociated, and in presence of a very small concentration of $H^{\cdot}$ ions, this dissociation is entirely suppressed. The free acid is colourless, the mono-metallic salt intensely coloured in solution and in the solid form. When a strong base is added to the solution, the free $H^{\cdot}$ ions are first neutralised, then the salt is formed, and this dissociates, the anion being of an intense pink colour.

$$(a)\quad H^{\cdot}+A'+Na^{\cdot}+OH'=Na^{\cdot}+A'+H_2O.$$

$$(b)\quad \underset{\text{Phenolphthalein.}}{HPh}+Na^{\cdot}+OH' \quad =Na^{\cdot}+\underset{\text{Pink.}}{Ph'}+H_2O.$$

Phenolphthalein is thus specially suited for the titration of weak acids with strong bases. On the other hand, it is unsuitable for the titration of weak bases, such as ammonium hydroxide, because the salt is largely hydrolysed by water :

$$NH_4^{\cdot}+Ph'+H_2O=HPh+NH_4^{\cdot}+OH',$$

producing the colourless acid form of the indicator. The coloured salt is obtained, therefore, only in presence of a considerable excess of ammonium hydroxide, and the end point is quite indefinite.

Even with a strong base phenolphthalein should not be used in presence of salts of ammonium or other weak cation. The latter fixes a quantity of OH' ions, and the end-point is again indefinite.

Methyl orange is a strong acid, and at the same time has feebly basic properties. The undissociated alkali salt is yellow, the anion red ; and as the salts are partly dissociated in aqueous solution, the latter has an orange colour. A trace of alkali represses the dissociation and the colour becomes yellow. This change takes place from an acid

[1] *Ber.* **39**, 1084 (1906), **40**, 3017 (1907), **41**, 1187 (1908).

solution when the $H^{\cdot}$ ion concentration is reduced to about 10^{-5} N, that is to say, while it is still about 100 times greater than in pure water. Weak bases, therefore, may be titrated with strong acids by the aid of methyl orange. Weak acids, on the other hand, have very little effect on it; acetic acid does not unite with it, and in general the salts formed with weak acids are so completely hydrolysed in aqueous solution that the colour change takes place slowly.

Methyl red gives a much sharper end-point than methyl orange, and is suitable for very dilute solutions of strong acids and strong bases. It may also be used for ammonia and other weak bases, or in solutions containing ammonium salts. Like methyl orange it is useless for weak acids, being itself a fairly strong acid. With carbonates at the boiling point it is less sensitive than litmus.

Titration of weak bases with weak acids should always be avoided. Their salts are so completely hydrolysed by water (p. 188) that no indicator will mark the end-point.

Sensitiveness of indicators. The true neutral point is that at which the concentrations of $H^{\cdot}$ and OH' ions are exactly equal at the values they attain in pure water, namely $[H^{\cdot}]=[OH']=1\times10^{-7}$. The product of these concentrations must be constant in all aqueous solutions because of the equilibrium with water:

$$H_2O \rightleftharpoons H^{\cdot}+OH',$$

whose dissociation constant is $[H^{\cdot}]\times[OH']=1\times10^{-14}$. If the $H^{\cdot}$ ion concentration is greater than 10^{-7} N, the solution is acid; if less, the solution is alkaline, the OH' ions predominating.

The colour changes in different indicators occur at widely different values of the $H^{\cdot}$ ion concentration. An ideal indicator would be one whose structural change should occur just as the neutral point, $P_H=7$, is passed (**199**). The departures from this ideal in the case of some common indicators are shown in the following table: the P_H ranges are determined electrometrically.[1]

[1] See Nernst, *Theoretical Chemistry*, 615 (1923).

Indicator.	Colour change.	P_H value.	Suitable for titration of
Phenolphthalein	red—colourless	7·8—7·5	weak acid—strong base
Litmus - -	blue—red	6·97	weak acid—strong base
Methyl orange -	yellow—red	5·2—3·3	weak base—strong acid
Methyl red -	yellow—red	6·5—5·7	weak base—strong acid
p. Nitrophenol -	yellow—colourless	6·7—6·1	weak acid—strong base

Estimation of KOH in Caustic Potash (sticks).

239. Given sulphuric acid, 1 c.c. = ·0253 grs. H_2SO_4.

Weigh a dry corked tube containing about 10 grs. of the stick potash. Transfer the stick to water in a 250 c.c. flask and reweigh the tube and cork. Allow the caustic potash to dissolve, and when cold make up to 250 c.cs. Use 25 c.cs. for each titration, with methyl orange or litmus as indicator.

The results should be entered as under.

Tube and caustic potash,	22·84 grs.	
Tube, - - - -	12·95 „	
Caustic potash, - -	9·89 „	

Titrations :	1.	2.	3.	
	24·98	26·88	24·52	
	·52	2·39	1·10	
	24·46	24·49	24·42	Average 24·46 c.cs.

$$\underset{112}{2KOH} + \underset{98}{H_2SO_4} = K_2SO_4 + 2H_2O.$$

1 c.c. of acid contains ·0253 grs. of H_2SO_4 ;

∴ 1 c.c. of acid will neutralise $\cdot 0253 \times \frac{112}{98}$ grs. KOH,

and 24·46 c.cs. „ „ „ $\frac{\cdot 0253 \times 112 \times 24 \cdot 46}{98}$ grs. KOH,

but 24·46 c.cs. „ „ „ 25 c.cs. of the caustic potash solution ·

$\therefore$ 25 c.cs. of the solution contains $\frac{\cdot 0253 \times 112 \times 24\cdot 46}{98}$ grs. of KOH;

$\therefore$ 250 c.cs. of the caustic potash solution or 9·89 grs. of the sticks contain $\frac{\cdot 0253 \times \cdot 112 \times 24\cdot 46 \times 10}{98}$ grs. of KOH;

$\therefore$ per cent. of KOH in the sticks is $\frac{\cdot 0253 \times 112 \times 24\cdot 46 \times 10 \times 100}{98 \times 9\cdot 89}$

$= \underline{73\cdot 19}$.

Estimation of Na_2CO_3 in Soda Crystals.

Given 1 c.c. of sulphuric acid contains ·0253 grs. H_2SO_4.

240. Powder the crystals, and if moist, dry between layers of filter paper. Weigh out about 10 grs. from a stoppered bottle, dissolve in water and make up to 250 c.cs. Titrate 50 c.cs. at a time, using methyl orange as indicator.

$$\underset{106}{Na_2CO_3} + \underset{98}{H_2SO_4} = Na_2SO_4 + H_2O + CO_2.$$

1 c.c. of acid contains ·0253 grs. H_2SO_4;

$\therefore$ 1 c.c. of acid will neutralise $\cdot 0253 \times \frac{106}{98}$ grs. of Na_2CO_3,

$= \cdot 0274$ grs. of Na_2CO_3.

It will be an advantage, when doing many estimations of the same substance, to calculate the strength of the standard solution in terms of the substance to be found, as above, before proceeding with the calculation.

Enter results as before.

Bottle and crystals,	30·61 grs.
Bottle, - - -	20·16 „
Crystals, -	10·45 „

Titrations with 50 c.cs.	1.	2.	3.	
	30·16	30·04	29·86	
	2·18	2·04	1·90	
	27·98	28·00	27·96	Average 27·98 c.cs.

27·98 c.cs. of acid $= 27\cdot 98 \times \cdot 0274$ grs. Na_2CO_3;

$\therefore$ 250 c.cs. of solution or 10·45 grs. crystals contain

$27\cdot 98 \times \cdot 0274 \times 5$ grs. Na_2CO_3;

$\therefore$ per cent. of Na_2CO_3 in crystals $= \frac{27\cdot 98 \times \cdot 0274 \times 5}{10\cdot 45} \times 100.$

$= \underline{36\cdot 68}.$

Estimation of HCl in Concentrated Hydrochloric Acid.

241. Given sodium hydrate solution equivalent to the sulphuric acid used in the previous experiments, *i.e.* 1 c.c. = ·0253 grs. H_2SO_4;

$$\therefore \text{ 1 c.c.} = \cdot 0253 \times \frac{36 \cdot 5}{49} \text{ grs. HCl} = \cdot 0188 \text{ grs. HCl.}$$

Pour 7 or 8 c.cs. of concentrated hydrochloric acid into a weighed stoppered bottle. Weigh the bottle and acid. Wash the contents into a 250 c.c. flask and make up to the mark. Take 50 c.cs. for each titration and run in caustic soda solution, using methyl orange as indicator. Take the mean of three concordant titrations, and calculate the result as in the preceding examples.

Acetic acid. This is a monobasic acid, but like most organic acids, it is only slightly dissociated in aqueous solution. It therefore requires a weak indicator, like phenolphthalein; methyl orange gives indefinite end-reactions (see Indicators, par. **238**).

Place about 4 c.cs. of acetic acid in a weighed stoppered bottle, and proceed as for hydrochloric acid.

Other acids may be estimated by using similar methods.

Estimation of Formaldehyde.

242. Formaldehyde is oxidised to formic acid by means of hydrogen peroxide in presence of alkali. The quantity of alkali neutralised thus gives a measure of the amount of formaldehyde. Other acids of course must be absent, or if present must be determined by a blank test.

Weigh about 5 grams of the solution (formalin, **129**) in a weighing bottle, transfer to a 250 c.c. measuring flask, and rinse the bottle several times with a few c.cs. of cold water. Now add 100 c.cs. of normal sodium hydroxide solution, and very carefully add 50-75 c.cs. of hydrogen peroxide solution from a pipette. Mix well and allow to stand in a warm place for ½-1 hour. Make up to the mark with water, and titrate the excess of alkali, with methyl orange as indicator.

The reaction is more rapid with 2N-alkali, and may then require only 10-15 minutes. The peroxide used is 20 volume, and as this may vary in strength (**256**) care must be taken to use a sufficient quantity. Compare the result with that of the iodimetric method (**272**).

Estimation of Alkalies in Soda Ash.

243. Soda ash consists mainly of sodium carbonate, but may contain also small quantities of bicarbonate, or of hydroxide, according to its source and treatment.

Weigh out about 10 grs. of soda ash, dissolve in water and make up to 500 c.cs. Take 50 c.cs. for each titration. Add a few drops of phenolphthalein and slowly run in the acid from the burette until the red colour of the liquid is just destroyed. Read the burette. At this stage any sodium hydroxide present will have been neutralised and the sodium carbonate will have been converted to bicarbonate.

$$2Na_2CO_3 + H_2SO_4 = 2NaHCO_3 + Na_2SO_4.$$

Now add a little methyl orange and run in acid till the yellow colour changes to pink.

$$2NaHCO_3 + H_2SO_4 = Na_2SO_4 + H_2O + CO_2.$$

From these equations it is clear that the quantities of acid used in the two parts of the titration of pure carbonate are exactly equal, namely (*a*) the quantity used in the conversion of carbonate to bicarbonate, and (*b*) that used in changing the bicarbonate to sulphate. Although phenolphthalein only indicates approximately the stage of bicarbonate (**238**), no serious error is introduced.

But with commercial samples of soda ash, *a* and *b* are never equal. Sodium hydroxide in the substance is first attacked by the acid, and causes the first portion of acid to be greater than the second. In this case the quantities of acid used by the

$$NaOH = a - b.$$

and by

$$Na_2CO_3 = 2b.$$

Alternatively, if bicarbonate be present in the original

sample, the second portion of acid will be greater, and the acid used for the

$$Na_2CO_3 = 2a.$$

and for $$NaHCO_3 = (b - a).$$

Example.

Weight of soda ash used, - - - -	10 grs.
Volume of acid for first operation, - -	10·0 c.cs.
Total volume of acid used, - - - -	18·9 „
Volume used in second operation, - -	8·9 „
∴ Volume used for neutralisation of carbonate,	17·8 „
and „ „ „ „ hydroxide,	1·1 „

∴ Weight of NaOH in 50 c.cs. solution or 1 gr. of sample

$$= 1{\cdot}1 \times {\cdot}0392 = {\cdot}0431\ ;$$

∴ Percentage of NaOH = 4·31.

and weight of Na_2CO_3 in 50 c.cs. solution or 1 gr. of sample

$$= 17{\cdot}8 \times {\cdot}0519 = {\cdot}9248\ ;$$

∴ Percentage of Na_2CO_3 = 92·48.

NOTE. The student should repeat this experiment, using pure sodium carbonate to test the accuracy of the method.

In technical work the alkali present is generally given as so much Na_2O. Although this substance does not exist as such in the solutions, it is easy to calculate the equivalent value of the alkali in terms of Na_2O, thus :

$$\underset{98}{H_2SO_4} + \underset{62}{Na_2O} = Na_2SO_4 + H_2O,$$

therefore if 1 c.c. sulphuric acid = ·048 grs. H_2SO_4,

1 c.c. „ „ $= {\cdot}048 \times \frac{62}{98} = {\cdot}0304$ grs. Na_2O.

In the last estimation the total Na_2O will be

$$18{\cdot}9 \times {\cdot}0304 \times 10 = 57{\cdot}45 \text{ per cent.}$$

As further exercises, the strengths of nitric acid, sulphuric acid, ammonium hydrate solutions, oxalic acid, tartaric acid, etc., may be estimated.

Estimation of NH_4 in Ferrous Ammonium Sulphate.

Given acid and alkali (equal) 1 c.c. = ·0253 gr. H_2SO_4.

244. Fit up the apparatus shown in the sketch (Fig. 59). Crush and dry the salt. Weigh into the flask *A*, an amount sufficient to produce enough ammonia to neutralise about 20 c.cs. of the acid. Place in the flask *C*, 25 c.cs. of the standard acid. Add a small excess of alkali to the salt and keep boiling for about 20 minutes. The arrangement of the flasks *B* and *C* prevents the acid from rushing back into *A*. Keep the flasks *B* and *C* cool with water. Wash the contents into one flask and titrate the excess of acid with standard alkali. Subtract the volume required from 25 c.cs. to obtain the volume of acid neutralised by the ammonia.

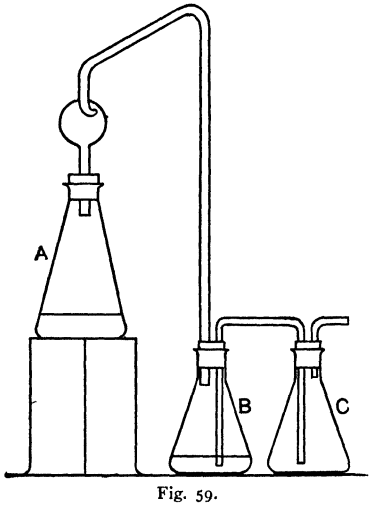

Fig. 59.

To calculate the result,

$$H_2SO_4 + 2NH_3 = (NH_4)_2SO_4\,;$$

$\therefore$ H_2SO_4 corresponds to $2NH_4$,

or 98 parts by weight correspond to 36 parts NH_4.

1 c.c. of acid = ·0253 grs. H_2SO_4.

1 „ „ $= \cdot 0253 \times \frac{36}{98}$ grs. NH_4.

Estimation of Nitrates.

Nitrates and nitrites may be reduced to ammonia in various ways. In an apparatus like the above (Fig. 59) weigh out about 0·5 gram of potassium nitrate into the flask *A*, and dissolve in about 100 c.cs. water. Add 2·5

grams of Devarda's alloy which has been passed through a 60-mesh sieve, and 5 c.cs. of alcohol. In the absorption flasks place 25 c.cs. of N/2 acid, and then to *A* add a solution of 10-12 grams caustic soda in about 100 c.cs. water, and quickly close the flask. Warm gently until the reaction begins, and then allow to stand until, in about an hour, the evolution of hydrogen is nearly over. The reduction of the nitrate to ammonia will now be complete, and the liquid in *A* is boiled for 20-30 minutes. The subsequent procedure is the same as for the estimation of ammonia.

Estimation of $NaNO_2$ in Sodium Nitrite.

245. Hydroxylamine and nitrous acid decompose each other readily at moderate temperatures, nitrous oxide being evolved. When the hydrochloride is mixed with sodium nitrite, the following reactions take place :

$$NH_2OH \,.\, HCl + NaNO_2 = NaCl + N_2O + 2H_2O.$$

Prepare roughly a 1 per cent. solution of hydroxylamine hydrochloride, and titrate 25 c.cs. with N/10 NaOH, using phenolphthalein as indicator :

$$NH_2OH \,.\, HCl + NaOH = NH_2OH + NaCl + H_2O.$$

Weigh out accurately 2·5-3·5 grams of sodium nitrite, dissolve in boiled-out distilled water and make up to 500 c.cs. Of this take 25 c.cs. for each titration, add 25 c.cs. of the hydroxylamine solution, and heat to about 80° C. for 10 minutes, or until no more nitrous oxide is given off on shaking.

Cool, and titrate the excess of hydroxylamine in the solution with N/10 NaOH. From the decrease in acidity calculate the percentage of $NaNO_2$ in the sample of nitrite. Compare with the $KMnO_4$ method (**257**).

To determine the Equivalent of Magnesium by use of Standard Acid.

Given N. sulphuric acid and N. sodium hydroxide.

246. The acid contains 1 gr. of replaceable hydrogen per litre. Weigh accurately about ·4 gr. of magnesium into a

titrating flask, add a little water, and then slowly add 50 c.cs. of the sulphuric acid. The metal dissolves completely in the acid. Titrate the excess of acid with alkali and thus find the volume of acid neutralised by the magnesium. Assume this to be 33 c.cs.

Calculate as follows.

1 c.c. of acid = ·001 gr. hydrogen ;

∴ 33 c.cs. „ „ = ·033 gr. „

·033 grs. of hydrogen are replaced by ·4 gr. magnesium.

∴ 1 „ „ is „ „ $\frac{\cdot 4}{\cdot 033} = \underline{12\cdot 1}$.

Or the weight of metal required to neutralise 1 litre of the N. sulphuric acid may be calculated. This is the equivalent. In the same way find the equivalent of zinc, and of aluminium. The latter will require a stronger solution of acid, say five times normal.

To determine the Equivalent of Zinc, using the Oxide.

The method is similar to that described in the previous experiment.

Use as before 50 c.cs. of acid. Weigh out and dissolve in the acid 1·5 grs. of zinc oxide. Titrate the excess of acid with sodium hydroxide.

Calculate as follows. Assume the acid used = 37 c.cs.

37 c.cs., *i.e.* ·037 grs. of hydrogen = 1·5 grs. zinc oxide ;

1 gr. „ „ $= \frac{1\cdot 5}{\cdot 037} = 40\cdot 5$ grs. of zinc oxide.

This 40·5 must consist of the equivalent of oxygen (the oxygen combining with 1 part of hydrogen) united to that of the zinc, and therefore the equivalent of zinc, will be found by subtracting 8. ∴ equivalent of zinc = 40·5 − 8 = $\underline{32\cdot 5}$.

Repeat with other oxides, as MgO.

STANDARD SOLUTIONS OF OXIDISING AGENTS.

POTASSIUM PERMANGANATE, $KMnO_4$.

247. Potassium permanganate in presence of a reducing agent will give up a portion of its oxygen. Sulphuric acid is

always added to prevent the precipitation of the manganese as oxide. In such cases the potassium and manganese are left as potassium and manganous sulphates, and therefore the amount of available oxygen is shown by the following equation :

$$\underset{2\times158.}{2KMnO_4}+3H_2SO_4=2MnSO_4+K_2SO_4+3H_2O+\underset{5\times16.}{5O}.$$

Thus we see that 316 parts by weight of potassium permanganate supply 80 parts by weight of oxygen available for oxidation.

A normal solution of an oxidising agent is one which contains, in one litre, the equivalent weight in grams of oxygen available for oxidation.

Therefore a normal solution of potassium permanganate contains 31·6 parts of the salt per litre.

The principal reacting element here is oxygen, but though the 31·6 grs. of the salt contain 12·8 grs. of oxygen, only 8 grs. are available for oxidation.

Action of Potassium Permanganate on Ferrous Salts.

248. In oxidations by potassium permanganate, we need only consider the available oxygen, thus :

$$\underset{10\times56.}{10FeSO_4}+5H_2SO_4+\underset{5\times16.}{5O}=5Fe_2(SO_4)_3+5H_2O.$$

From this, we see that 10 atoms of iron (atomic weight 56) are oxidised by 5 atoms of oxygen, or 560 parts by weight of iron by 10 equivalents of oxygen.

We may now write :

1 litre of $\frac{N}{10}$ potassium permanganate contains 3·16 grs. $KMnO_4$.
1 " " " " yields ·8 grs. O.
1 " " " " oxidises 5·6 grs. Fe.

$\frac{N}{10}$ Potassium Permanganate.

249. Weigh out exactly 3·16 grs. of the purest potassium permanganate, dissolve in water, and make up to one litre. The solution may be checked with pure oxalic acid (**254**) or H_2O_2 (**370**).

Estimation of Fe in Ferrous Ammonium Sulphate.

$FeSO_4 . (NH_4)_2SO_4 . 6H_2O$.

250. Weigh out about 4 grs. of the salt, dissolve in water, adding a few drops of sulphuric acid, and make up to 250 c.cs. Take 50 c.cs. for each titration and add dilute sulphuric acid. Run in the permanganate. As the permanganate is reduced its colour is destroyed, and therefore when the oxidation is complete, one drop will colour the liquid permanently.

1 c.c. $\frac{N}{10}$ potassium permanganate contains ·00316 grs. $KMnO_4$;

∴ „ „ „ „ will oxidise ·0056 grs. Fe.

Enter results, and calculate as in previous estimations.

Estimation of Fe in Iron Wire.

Given 1 c.c. of potassium permanganate = ·00316 grs. $KMnO_4$
= ·0056 grs. Fe.

251. Fit up two small flasks with stoppers and tubes, so that a current of carbon dioxide may be sent through them (Fig. 60). Place the flasks on an iron or asbestos plate, standing on a tripod, and in each, place 60-70 c.cs. of dilute sulphuric acid. Boil the acid to expel air, and then pass the carbon dioxide through the flasks. Place in each flask about 0·1 gram of iron wire, accurately weighed, and continue the current of gas until all the iron has dissolved. Titrate the whole of the solution in each flask at one operation, and without loss of time. If the results do not agree, repeat the experiment.

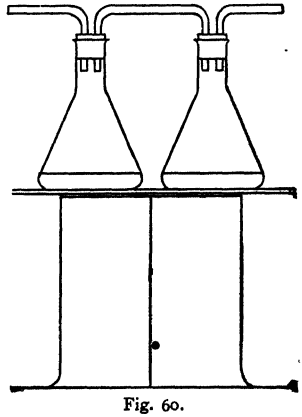

Fig. 60.

Estimation of Fe in Iron Alum.

$K_2SO_4 . Fe_2(SO_4)_3 . 24H_2O$.

252. The iron in this salt is in the ferric state, and must be reduced to the ferrous condition for titration with permanganate.

Weigh accurately into a small flask about ·6 grs. of iron alum, dissolve in water, and add sulphuric acid. Place in the liquid a few pieces of zinc (free from iron) and allow the action to continue until all the zinc is dissolved. To see whether the reduction is complete, take out a drop on the end of a fine glass rod and touch with it, a drop of a solution of potassium ferricyanide on a white plate. If a blue colour is produced, more zinc, and possibly acid, must be introduced. If the reduction is found complete, titrate the whole as soon as the zinc has dissolved.

The student should try the action of other reducing agents, as sulphuretted hydrogen or sulphur dioxide, taking care that none of the reducing agent is left when titrating.

Estimation of Fe in Haematite.

(Fe_2O_3.)

253. Grind the haematite very finely in an agate mortar. Weigh accurately about ·7 grs. and dissolve in strong hydrochloric acid on a water-bath. Reduce the iron to the ferrous state by adding stannous chloride in slight excess. Remove the excess of stannous chloride by adding excess of mercuric chloride solution. Dilute to 250 c.cs. and titrate 50 c.cs. at a time.

Estimation of Oxalic Acid, $(COOH)_2$, in Commercial Oxalic Acid and Oxalates.

254. When oxalic acid is oxidised, water and carbon dioxide are produced.

$$\underset{90}{(COOH)_2} + \underset{16}{O} = H_2O + 2CO_2.$$

Thus 3 parts of oxygen oxidise 45 parts of anhydrous oxalic acid.

1 c.c. $\frac{N}{10}$ potassium permanganate = ·0008 grs. oxygen ;

∴ 1 „ „ „ „ = ·0045 grs. $(COOH)_2$.

Weigh out 1·5 grs. of oxalic acid, dissolve in water, and make up to 250 c.cs. Take 25 c.cs. for each titration, add dilute sulphuric acid and run in a few c.cs. of the permanganate. The action is very slow in the cold, but takes place readily at 60° C. Heat the flask and continue adding the permanganate till the oxidation is complete. Calculate the percentage of oxalic acid.

Estimation of Ca in Calcium Carbonate.

255. Weigh about ·7 grs. of Iceland spar into a beaker, add water and dilute hydrochloric acid, and cover with a clock-glass. When dissolved, dilute to about 100 c.cs., heat nearly to boiling, add a slight excess of ammonium hydrate, and then a moderate excess of ammonium oxalate. Allow the liquid to settle, filter and wash well with hot water. Make a hole at the bottom of the filter paper and wash as much as possible of the precipitate through into a 250 c.c. flask. Wash the filter paper with warm dilute hydrochloric acid to remove all the oxalate. Add a few c.cs. of strong sulphuric acid to the liquid, make up to 250 c.cs. and titrate 50 c.cs. at a time.

1 c.c. $\frac{N}{10}$ potassium permanganate = ·0045 grs. $(COOH)_2$;

∴ 1 „ „ „ „ = ·0020 grs. Ca.

Estimation of Hydrogen Peroxide.

256. Measure 5 c.cs. of 20 volume hydrogen peroxide solution (or 10 c.cs. of 10 volume) into a 250 c.c. flask, make up to the mark, and titrate 25 c.cs. at a time with permanganate, adding a little dilute sulphuric acid. The reaction is practically instantaneous (see permanganates, **165**, 5, and **195**, 4), and the end-point is quite sharp. The calculation is simple:

1 c.c. of $\frac{N}{10}$ permanganate = ·56 c.cs or ·008 grm. oxygen
= ·0017 grs. H_2O_2.

For the gas-volumetric method for peroxide (see par. **370**).

Sodium Peroxide. When sodium peroxide is added to very cold dilute sulphuric acid, hydrogen peroxide is produced. To avoid loss of active oxygen the following procedure should be adopted. A solution of 5 grms. pure boric acid and 5 c.cs. conc. H_2SO_4 in 100 c.cs. water is thoroughly cooled, and to this 0·5 gram of sodium peroxide

is slowly added, with frequent shaking. The H_2O_2 thus formed is at once titrated with permanganate.

Persulphates. These may be estimated by means of their oxidising action on ferrous salts in presence of sulphuric acid (**198**) :

$$K_2S_2O8 + 2FeSO_4 \xrightarrow[H_2SO_4]{} Fe_2(SO_4)_3 + K_2SO_4.$$

Prepare a solution of 20 grms. crystallised ferrous sulphate and 50 c.cs. sulphuric acid, made up to 500 c.cs. Weigh out accurately 0·3-0·4 grs. of potassium or ammonium persulphate into a flask fitted with wash-bottle tubes, and pass a current of CO_2 through the flask to displace the air. Introduce 25 c.cs. of the ferrous sulphate solution, and then 150 c.cs. of hot water from which the air has just been boiled out. Mix well until all the persulphate has dissolved, then cool and titrate the solution with N/10 permanganate. Titrate also 25 c.cs. of the original ferrous sulphate solution, and from the difference calculate the purity of the persulphate.

MnO_2 in Pyrolusite. This may be estimated by a method similar to that used for persulphates. It has the same oxidising action on ferrous salts :

$$MnO_2 + 2FeSO_4 + 2H_2SO_4 = MnSO_4 + Fe_2(SO_4)_3 + 2H_2O.$$

Grind some of the ore to an impalpable powder, and weigh accurately 0·2-0·3 grs. into the flask fitted with wash-bottle tubes, and pass CO_2 as in the last experiment. Add 25 c.cs. of the ferrous sulphate solution, and while the current of CO_2 is still passing, heat just to boiling until no trace of MnO_2 remains. Cool the flask and titrate the excess of ferrous salt with permanganate. Compare this with 25 c.cs. of the original ferrous sulphate, and from the difference calculate the amount of MnO_2.

Estimation of $NaNO_2$ in Sodium Nitrite.

257. Nitrites are decomposed by dilute acids, nitrous acid being liberated. The nitrous acid is extremely unstable, and even in dilute solutions splits up, liberating nitric oxide :

$$3HNO_2 = HNO_3 + 2NO + H_2O.$$

The production of nitric oxide (red gas with air) would mean loss of nitrous acid. The estimation should be carried out as follows:

Weigh out about 2 grs. of sodium nitrite, dissolve in water, and make up to 500 c.cs. Take 25 c.cs. for each titration. With the first 25 c.cs. run in about 10 c.cs. of the permanganate, add a few drops of dilute sulphuric acid, and shake. The colour of the permanganate disappears. Now run in more permanganate (with addition of sulphuric acid if necessary) till a permanent colour is produced. The reduction near the end of the action is slow, and the solution must be allowed to stand. When finished read the burette.

Take another 25 c.cs. and run in nearly the volume of permanganate used in the first titration. Add a little acid, and then run in permanganate till the oxidation is complete. The smell of the contents of the flask will indicate whether there is loss of nitric oxide. Repeat the experiment and obtain three results which agree.

$$\underset{69}{NaNO_2} + \underset{16}{O} = NaNO_3.$$

1 c.c. $\frac{N}{10}$ potassium permanganate = ·0008 grs. O;

∴ 1 „ „ „ „ = ·00345 grs. $NaNO_2$;

or 1 „ „ „ „ = ·00235 grs. HNO_2.

STANDARD POTASSIUM DICHROMATE SOLUTION.

258. Like potassium permanganate, this substance is an oxidising agent, and from each molecule of the salt, three atoms of oxygen are available for oxidation:

$$\underset{294}{K_2Cr_2O_7} + 4H_2SO_4 = K_2SO_4 + Cr_2(SO_4)_3 + 4H_2O + \underset{48}{3O}.$$

Hence 294 grs. of potassium dichromate yield 48 grs. of oxygen available for oxidation, and therefore a normal solution will contain 49 grs. of the salt per litre. A decinormal solution (4·9 grs. per litre) is generally used.

Preparation of $\frac{N}{10}$ Dichromate Solution.

Gently fuse a little over 5 grs. of pure potassium dichromate in a porcelain dish and then powder in a dry mortar.

Weigh out exactly 4·9 grs., dissolve in water and make up to a litre.

1 c.c. $\frac{N}{10}$ potassium dichromate contains ·0049 grs. $K_2Cr_2O_7$;

∴ 1 „ „ „ „ yields ·0008 grs. O;

∴ 1 „ „ „ „ oxidises ·0056 grs. Fe.

Estimation of Fe in Ferrous Ammonium Sulphate.

259. Carry out the experiment as with potassium permanganate, except in the indication of the end point. With potassium dichromate the reduced solution, which contains chromium sulphate, is green in colour, and it is impossible to distinguish the colour produced by one drop of potassium dichromate in this liquid. The use of an external indicator is resorted to, and the mode of use is as follows:

In a test-tube place a small crystal of potassium ferricyanide, and wash it several times with water; then add water to make a very dilute solution. By means of a glass rod place a series of drops of this solution on a white tile or plate, and from time to time during the titration with the dichromate, take out from the flask, on the end of a glass rod, a little of the solution and touch with it one of the drops. If much ferrous iron is present, a strong blue colour will be produced. This will become fainter as more dichromate is added, and finally the drop will give only a faint brown colour. The oxidation is then complete. Calculate as with potassium permanganate.

Estimation of Fe in Spathic Iron Ore.

260. Grind the ore very finely. Weigh out ·5 gr. and dissolve in the apparatus used for the estimation of iron in wire (**251**), using a mixture of equal volumes of strong hydrochloric acid and water. Dilute with air-free water to 5 times the volume, and titrate the whole at once with potassium dichromate.

By this process the ferrous iron alone is estimated.

To estimate the *total* iron, take a similar weight of ore, dissolve as before, but there is no necessity to take precautions against oxidation. Do not use much hydrochloric acid in either

process or chlorine will be liberated by action with the dichromate.

When dissolved, add 10-15 c.cs. of strong sulphuric acid; add some zinc, and reduce as with haematite (**253**). Titrate the whole at once. Calculate the ferrous iron as FeO, and the ferric as Fe_2O_3.

Valuation of Zinc Dust.

261. This material is largely used as a reducing agent, its value for this purpose depending on the amount of metallic zinc present. It usually contains, however, a large proportion of zinc oxide, together with other impurities.

A method for its valuation is based on the reduction of potassium dichromate. Make a $\frac{1}{2}$-N. solution of dichromate by dissolving 4·9 grs. and making up to 200 c.cs. This solution should oxidise 3·25 grs. (one-tenth equivalent) of zinc. Weigh out accurately about 0·5 gr. of the zinc dust, place it in a 250 c.c. flask, and add 50 c.cs. of the dichromate solution. Now add dilute sulphuric acid, little by little, with gentle shaking, until the zinc is completely dissolved, and then make up to the mark with water. The dichromate solution would now have been of decinormal strength, but it has been partly reduced. Prepare 100 c.cs. of $\frac{N}{10}$ ferrous ammonium sulphate solution, and titrate 10 c.cs. of this with the reduced dichromate, repeating the titration until several concordant results are obtained. Suppose that 18·5 c.cs. of dichromate are required, and that the weight of zinc dust used is 0·57 gr.

Then, since only 10 c.cs. of decinormal dichromate would have been required, the dichromate is $\frac{10}{18{\cdot}5}$ of decinormal. Therefore 250 c.cs. contain

$$\frac{250 \times 0{\cdot}0049 \times 10}{18{\cdot}5} \text{ grs. } K_2Cr_2O_7,$$

and the amount of dichromate reduced by the zinc is

$$\frac{250 \times 0{\cdot}0049(18{\cdot}5 - 10)}{18{\cdot}5} \text{ grs.}$$

The weight of zinc equivalent to this is

$$\frac{250 \times 0{\cdot}00325(18{\cdot}5 - 10)}{18{\cdot}5} \text{ grs.},$$

and therefore the amount of zinc in the sample of zinc dust is

$$\frac{250 \times 0{\cdot}00325(18{\cdot}5 - 10) \times 100}{18{\cdot}5 \times 0{\cdot}57} = 65{\cdot}5 \text{ per cent.}$$

(For the gas-volumetric method, see par. **228**).

STANDARD SILVER NITRATE SOLUTION.

262. The molecular weight of silver nitrate is 170, and as each molecule contains one atom of silver and silver is monovalent, a normal solution of the salt will contain a gram molecule in a litre, *i.e.* the equivalent weight in grams of silver per litre.

A decinormal solution is generally used.

$\frac{N}{10}$ Silver Nitrate and Sodium Chloride.

Dissolve exactly 4·25 grs. of silver nitrate in distilled water and make up to 250 c.cs.

The student should calculate the amount of pure salt necessary for this preparation and make up the solution. It should then be titrated against the $\frac{N}{10}$ silver nitrate as a check on the working. Such a solution may be used to estimate silver volumetrically.

Estimation of Cl in Sodium Chloride.

$$\underbrace{AgNO_3}_{\substack{108+14+48 \\ 170}} + \underbrace{NaCl}_{\substack{23+35{\cdot}5 \\ 58{\cdot}5}} = AgCl + NaNO_3.$$

1 c.c. $\frac{N}{10}$ silver nitrate contains ·0170 grs. $AgNO_3$; or ·0108 grs. Ag, and precipitates ·00355 grs. Cl.

263. Weigh about 1 gr. of pure sodium chloride, dissolve in distilled water and make up to 250 c.cs. Take 50 c.cs. for each titration. Add one or two drops of potassium chromate (K_2CrO_4) solution as indicator and run in the silver nitrate. The silver nitrate first precipitates silver chloride, and only when the whole of this is precipitated will the red silver chromate be produced. Therefore when one drop gives a

permanent red colouration the chloride is all precipitated. Calculate the percentage of chlorine. Mineral acids decompose the red Ag_2CrO_4.

Given the equivalent of chlorine as 35·45, calculate the equivalent of sodium.

Estimation of Cl in Tap-water.

264. Make a centinormal solution of silver nitrate, by diluting 25 c.cs. of the decinormal solution to 250 c.cs. Take 50 c.cs. of the tap-water for each titration.

Calculate the result in grains per gallon.

1 gallon—70,000 grains.

70 c.cs. water—70 grs. or 70,000 ,m.grs.

Therefore the actual weight, in m.grs., of chlorine in 70 c.cs. of tap-water, will give the number of grains per gallon.

Bromides and iodides may be estimated in a similar way to chlorides.

STANDARD POTASSIUM CYANIDE.

265. Make a solution containing 25 grs. of potassium cyanide in 1 litre. Potassium cyanide forms with copper salts a double cyanide which is colourless and can be used for the estimation of copper.

To standardise the solution, weigh out exactly 1·25 grs. of pure copper into a 250 c.c. flask, and dissolve it in nitric acid (1 : 1) with gentle warming. When dissolved allow the solution to cool and make up to 250 c.cs. Take 25 c.cs. of the copper solution in a conical flask, and carefully add sodium carbonate until a precipitate just forms. Add 1 c.c. of ammonia solution (1 : 2) to dissolve the precipitate and run in the cyanide till the blue colour just disappears. Calculate the quantity of water required to make the cyanide solution equivalent to the copper solution, make the addition and titrate again to check the results.

1 c.c. of the standard cyanide=·005 grs. copper. The cyanide solution can now be used for the estimation of copper.

STANDARD POTASSIUM THIOCYANATE.

266. Weigh roughly about 10 grams of potassium thiocyanate, dissolve in water and make up to 1 litre. The solution is standardised against decinormal silver nitrate, a white precipitate of silver thiocyanate being formed :

$$AgNO_3 + KCNS = AgCNS + KNO_3.$$

The indicator consists of pure iron alum, and is used in presence of nitric acid, which must be free from nitrous acid. To obtain this, add to the ordinary pure nitric acid one quarter of its bulk of water, and boil till colourless. Since the red ferric thiocyanate is decomposed by soluble silver salts, the silver must be completely precipitated before a permanent red colour is produced. This marks the end-point.

$\frac{N}{10}$ Potassium Thiocyanate.

Take 25 c.cs. of decinormal silver nitrate, add 5 c.cs. of a saturated solution of iron alum and about 10 c.cs. of the pure nitric acid, and run in the thiocyanate until a permanent red tinge is obtained. Repeat the titration, and add to the thiocyanate the quantity of water required to make the solution decinormal.

Estimation of Silver in a Silver Coin.

Weigh about 0·25 gr. of the coin, dissolve in nitric acid, boil to remove nitrous fumes, add the indicator, and titrate with the thiocyanate as before.

$$1 \text{ c.c. } \frac{N}{10} \text{ thiocyanate} = \cdot 0108 \text{ gr. Ag.}$$

Estimation of Copper.

When potassium thiocyanate is added to a solution of a copper salt saturated with sulphur dioxide a white precipitate of cuprous thiocyanate is produced (**329**).

Weigh out about 0·5 gr. of crystallised copper sulphate, dissolve in water in a 250 c.c. flask, pass sulphur dioxide

through the solution until saturated, and heat to boiling. Run in the decinormal thiocyanate until its addition produces no further precipitate. Then add 3 or 4 more c.c. and allow to cool. Make up to 250 c.c. and shake well. Filter the solution through a dry filter paper and take 50 c.c. of the filtrate for each titration. Add the indicator as before, run in decinormal silver nitrate till colourless, and titrate the excess of silver nitrate with thiocyanate.

Example.

Bottle and crystals	(1)	17·8902 grs.
,, ,,	(2)	17·1599 ,,
		·7303 grs.

Thiocyanate added to 250 c.c. = 34·29 c.cs.

	Silver nitrate.	Thiocyanate.	Excess of thiocyanate in 50 c.c.
(1)	2·74	1·67	1·07
(2)	1·16	·16	1·00
(3)	1·26	·24	1·02

Excess of thiocyanate added to 250 c.c. = 5 × 1·03 = 5·15 c.c.
Thiocyanate used = 34·29 - 5·15 = 29·14 c.c.

$$2CuSO_4 + 2H_2O + SO_2 + 2KCNS$$
$$= Cu_2(CNS)_2 + 2KHSO_4 + H_2SO_4$$

$$\therefore \ 1 \text{ c.c. } \frac{N}{10} \text{ KCNS} = \cdot 006357 \text{ grs. Cu.}$$

Percentage of copper in the crystals

$$= \frac{29 \cdot 14 \times \cdot 006357 \times 100}{\cdot 7303}$$

$$= 25 \cdot 33.$$

Estimation of Mercury.

Solutions of mercuric salts in presence of a large quantity of nitric acid can be titrated with standard thiocyanate :

$$Hg(NO_3)_2 + 2KCNS = Hg(CNS)_2 + 2KCN.$$

Weigh 2 grs. of mercuric oxide and dissolve it in nitric acid in a beaker. Transfer the solution to a 250 c.c. flask and make up to the mark with water. Take 25 c.cs.

for each titration, adding in each case 10 c.cs. conc. nitric acid, 5 c.cs. of the ferric sulphate indicator and 25 c.cs. of water. Run in the standard thiocyanate as in the titration of silver solution.

STANDARD IODINE AND THIOSULPHATE.

267. The usefulness of iodine in volumetric analysis depends largely upon its reaction with sodium thiosulphate, the iodine combining with part of the sodium. The action is represented by the following equation :

$$2Na_2S_2O_3 + I_2 = Na_2S_4O_6 + 2NaI.$$

By this action we are enabled to estimate iodine present in any solution in the free state.

Iodine gives with starch paste an intensely blue coloured substance commonly known as iodide of starch. If a solution of sodium thiosulphate is added to starch so coloured, the iodine reacts with the sodium thiosulphate as mentioned above and the blue colour is destroyed. The solutions of iodine and thiosulphate generally used are decinormal and are prepared as below.

$\frac{N}{10}$ Iodine and Thiosulphate.

268. If we regard the free iodine in solution, the equivalent of iodine being 127, we must dissolve 12·7 grs. per litre for a decinormal solution. If we consider the iodine solution as an oxidising agent acting according to the equation,

$$I_2 + H_2O = 2HI + O,$$

we again arrive at the amount 12·7 grs. to yield 0·8 grs. of oxygen, *i.e.* a decinormal solution.

Weigh out exactly 12·7 grs. of powdered purest resublimed iodine into a litre flask. Add about 20 grs. of pure potassium iodide and 200 c.cs. of water and shake until the iodine is dissolved. Then make up to a litre. Keep well stoppered and in the dark.

The thiosulphate solution should be equivolumetric with the iodine, and we must therefore weigh out a gram molecule of the salt (see equation) for a normal solution, and

one-tenth of this for a decinormal solution, and make up to a litre.

The same value is arrived at if we take the principal reacting element, *i.e.* the sodium which unites with the iodine.

Weigh out 24·8 grs. of the pure salt, $Na_2S_2O_3 . 5H_2O$, into a litre flask, dissolve in water and make up to one litre. Keep well stoppered and in the dark.

Equalisation of the Solutions.

Take 25 c.cs. of the iodine solution and run in thiosulphate from the burette. The colour of the iodine solution becomes fainter as the iodine enters into combination with the sodium, and when only a very faint yellow colour remains, add starch paste. This immediately produces a deep-blue colour. Now add the thiosulphate drop by drop, shaking well after each addition, till the blue colour just disappears. Read the burette. If the solutions have been accurately made with pure substances they will be found equivolumetric. If not, equalise by adding water to the stronger and find the strength of the sodium thiosulphate (and therefore also the iodine) as follows.

Standardisation of Sodium Thiosulphate by means of Dichromate.

269. Measure 25 c.cs. of $\frac{N}{10}$ potassium dichromate into a titrating flask, add about 2 grs. of solid potassium iodide, and then 5 c.cs. pure HCl. The hydrochloric acid is oxidised by the dichromate, and the chlorine so obtained liberates its equivalent of iodine. The liquid becomes dark-brown in colour, and contains the equivalent of 25 c.cs. of $\frac{N}{10}$ iodine solution. Titrate as before with the thiosulphate, adding starch paste when the free iodine is nearly all removed. The colour of the liquid is now composed of the brown of free iodine, the blue of starch iodide, and the green of the chromium chloride. Continue the addition of thiosulphate carefully until first the yellow colour, and then the blue, is discharged, leaving a pure green solution. With a little practice, the end point can be accurately determined.

If the thiosulphate solution is exactly decinormal, 25 c.cs. should be required to unite with the iodine liberated by 25 c.cs. of dichromate. From the volume actually used, the strength of the thiosulphate may be calculated.

Estimation of Chlorine in Chlorine Water.

270. Dissolve 7-8 grs. potassium iodide in a little water contained in a 250 c.c. flask. Add 50 c.cs. chlorine water, and make up to the mark. Titrate the liberated iodine, using 25 c.cs. for each titration.

Estimation of Bromine in Bromine Water.

Add 50 c.cs. of bromine water to a 250 c.c. flask containing a solution of 10 grs. of potassium iodide. Make up to the mark and titrate as with chlorine water.

Estimation of Copper.

271. When potassium iodide is added to a solution of a copper salt, cuprous iodide is precipitated and an equivalent amount of iodine is liberated :

$$\underset{2\times 63\cdot 5}{2CuSO_4}+4KI=Cu_2I_2+2K_2SO_4+\underset{2\times 127}{I_2}$$

The free iodine is then titrated with decinormal thiosulphate.

$$1 \text{ c.c. } \frac{N}{10} \text{ thiosulphate} = \cdot 0127 \text{ grs. I.}$$

$$= \cdot 00635 \text{ grs. Cu.}$$

Weigh out 5 grs. of crystallised copper sulphate, dissolve in water and make up to 250 c.cs. In a test-tube dissolve about 8 grs. of potassium iodide in water and use about one-fifth for each titration.

Take 25 c.cs. of the copper solution in a conical flask, add the potassium iodide, and run in the thiosulphate as in par. **268**, adding starch paste when the free iodine is nearly all removed.

Estimation of Formaldehyde.

272. Formaldehyde is oxidised to formic acid by iodine in alkaline solution, two atoms of iodine being equivalent to one molecule of the aldehyde.

Weigh about 2 grams of the solution (formalin, **129**) in a weighing bottle, and make up to **100** c.cs. Transfer 10 c.cs. to a 250 c.c. measuring flask, add about 25 c.cs. of N-NaOH solution, and 75 c.cs. of N/10 iodine solution, or more if necessary to produce a permanent yellow colour. Mix well and allow to stand for 10-15 minutes. Then add 30 c.cs. of normal acid, so that the liquid is just faintly acid, and the excess of iodine is liberated. Make up to the mark and titrate 50 c.cs. at a time with thiosulphate.

This method gives good results in the absence of other aldehydes or alcohol, which themselves react with iodine to produce iodoform (**127**). Commercial formalin containing only traces of such substances should give the same result by this method as by the peroxide method (**242**).

Estimation of MnO_2 in Commercial Manganese Dioxide.

273. Grind to very fine powder and weigh about ·5 gr. into a small flask with ground-in delivery tube (Fig. 61). Add 25 c.cs. of strong hydrochloric acid and some small pieces of magnesite, and connect to the U-tubes, the first of which contains 4 grams and the second 2 grs. of potassium iodide dissolved in water. The bulbs should be less than half filled. Heat gently. The chlorine evolved liberates iodine, which remains in solution. At the end of the action, gently boil the liquid in the small flask to drive off the chlorine. The magnesite, which dissolves slowly in hydrochloric acid, is placed in the flask at the beginning of the experiment, in order to provide a stream of carbon dioxide at the close. This prevents the liquid sucking back, and drives out the chlorine completely.

When the distillation is finished, wash the contents of the U-tubes into a 250 c.c. flask, make up to the mark, and take 50 c.cs. for each titration.

$$\underset{87}{MnO_2} + 4HCl = MnCl_2 + 2H_2O + \underset{2\times35\cdot5}{Cl_2}.$$

1 c.c. of thiosulphate = ·0127 grs. I

= ·00355 grs. Cl = ·00435 grs. MnO_2.

For the gas-volumetric method, see par. **371**.

Estimation of available Chlorine in Bleaching Powder.

274. Weigh about 10 grs. of bleaching powder into a mortar, add a little water, and grind to a thin cream. Pour the milky liquid into a litre flask and grind the residue with a little more water, and repeat till all the substance is in the flask. Make up to a litre. Shake well, take out 25 c.cs., add

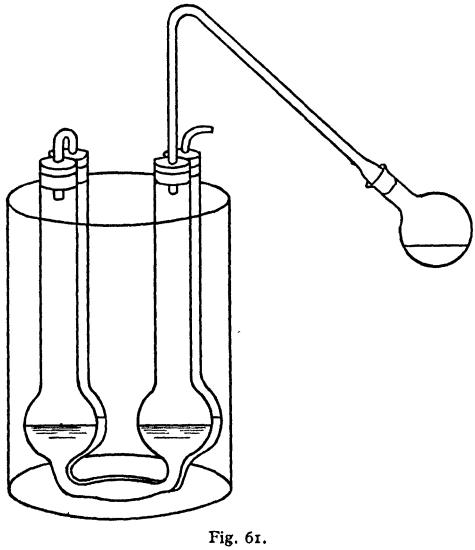

Fig. 61.

10 c.cs. of a solution of 5 grs. potassium iodide in 100 c.cs. of water, and acidify with acetic acid. The liberated chlorine displaces an equivalent quantity of iodine. Titrate with thiosulphate and calculate the amount of chlorine as in previous estimations.

$$Ca\begin{matrix}Cl\\OCl\end{matrix} + 2KI + 2CH_3COOH = I_2 + 2KCl + Ca(C_2H_3O_2)_2 + H_2O.$$

For the gas-volumetric method, see par. **372**.

Estimation of Hypochlorite.

Use the solution prepared as directed in par. **38.**

275. Make up the whole solution to 500 c.cs. Of this take 10 c.cs. and place it in a 250 c.c. flask. Add a solution of 7-8 grams potassium iodide in water, acidify the whole with acetic acid, make up to the mark and mix well. Titrate 50 c.cs. at a time with the thiosulphate. From the result calculate the amount of hypochlorite in the original solution.

$$NaOCl + 2KI + 2CH_3COOH = I_2 + NaCl + 2CH_3COOK + H_2O.$$

Estimation of Arsenious Acid.

276. This is oxidised to arsenic acid by means of free iodine;

$$H_3AsO_3 + I_2 + H_2O = H_3AsO_4 + 2HI.$$

Weigh out 2 grams of sodium arsenite, dissolve in water and make up to 250 c.cs. Measure 25 c.cs. of this solution into a titrating flask, add an equal bulk of a saturated solution of sodium bicarbonate to neutralise the hydriodic acid which will be formed, and some starch solution, and titrate with iodine until a permanent blue colour is just obtained.

A similar experiment may be made with sodium arsenate. Weigh out 2 grams, dissolve in water, add some acetic acid and boil for a few minutes to decompose any nitrite in the material. Cool and make up to 250 c.cs. Estimate any arsenious acid in the sample by titrating 25 c.cs. as above.

To determine the arsenic acid, take 100 c.cs. of the solution, reduce by saturating with sulphur dioxide and then boiling off the excess, and make up the cold solution to 200 c.cs. Titrate 50 c.cs. of this liquid, after adding $NaHCO_3$ and starch, with the iodine solution. This gives the total amount of arsenic, and hence the amount of arsenic acid in the original sample may be calculated.

Estimation of Antimony.

277. Antimony trioxide may also be oxidised and estimated by means of standard iodine:

$$Sb_2O_3 + 2I_2 + 2H_2O = Sb_2O_5 + 4HI.$$

As in the estimation of arsenic, the hydriodic acid set free must be neutralised with sodium bicarbonate.

Weigh out about 2 grams of tartar emetic,

$$K(SbO)C_4H_4O_6 . \tfrac{1}{2}H_2O,$$

dissolve in water, and make up to 250 c.cs. Titrate 25 c.cs. at a time, adding an equal bulk of saturated solution of sodium bicarbonate and a little starch solution, with standard iodine.

Estimation of Sulphurous Acid in Aqueous Solution.

278. Measure 5 c.cs. of freshly prepared sulphurous acid into a 250 c.c. flask containing 100 c.cs. of standard iodine solution. The latter must be in excess, so that the colour is not entirely discharged. Make up to the mark, and titrate the excess of iodine, 50 c.cs. at each titration, with thiosulphate.

$$H_2SO_3 + I_2 + H_2O = H_2SO_4 + 2HI.$$

The estimation may also be made, but less accurately, by diluting 10 c.cs. of the sulphurous acid solution to 500 c.cs., and running this from a burette into 25 c.cs. of the standard iodine.

Estimation of Sulphurous Acid in a Soluble Sulphite.

Weigh about one gram of sodium sulphite into a 250 c.c. flask, dissolve in water, acidify with acetic acid and run in a slight excess of iodine solution. Make up to the mark and titrate the excess of iodine with thiosulphate.

Estimation of Hydrogen Sulphide in Aqueous Solution.

279. Prepare a dilute solution of sulphuretted hydrogen by saturating about 30 c.cs. of air-free water with the gas, and diluting 25 c.cs. of this to 500 c.cs., also with air-free water. Titrate 50 c.cs. with iodine in presence of starch until the blue colour appears. The reaction

$$H_2S + I_2 = 2HI + S$$

is not quantitative if more than 0·04 per cent. of hydrogen sulphide is present. If more than this quantity is found, therefore, dilute the solution to a sufficient degree and repeat the experiment. Calculate the solubility of the gas.

280. Place in a litre flask about 10 grs. of sodium oleate or Castile soap, add 500 c.cs. of methylated spirit and allow the soap to dissolve. Make up to a litre with distilled water and shake well. To standardise the solution, prepare the following solution of a calcium salt.

Weigh out exactly 1 gr. of Iceland spar into a porcelain dish, and add a little dilute hydrochloric acid, covering the vessel with a clock glass. Allow the substance to dissolve, and then evaporate to dryness on a water bath. Redissolve the residue in distilled water and again evaporate, to complete the removal of the hydrochloric acid. Now dissolve the residue in distilled water and make up to one litre. Each c.c. of this solution contains calcium chloride equivalent to ·001 gr. of calcium carbonate.

Take 20 c.cs. of this solution in a stoppered bottle of 250 c.cs. capacity and add 50 c.cs. of distilled water.

Run in the soap solution from a burette, 1 c.c. at a time, and shake the bottle vigorously after each addition. When a slight lather is obtained add the soap more carefully till a permanent lather is obtained. This lather should last at least two minutes. Read the burette and calculate the volume of water to be added to the soap solution in order that 21 c.cs. shall produce a lather with 20 c.cs. of the calcium solution. The additional 1 c.c. of soap solution is required to produce a lather with 70 c.cs. of distilled water.

The soap solution is now of such strength that 1 c.c. will precipitate ·001 gr. of calcium carbonate or its equivalent.

Since 0·001 gr. in 70 c.cs. (70 grs.) is 1 part in 70,000, the number of milligrams in 70 c.cs. is equal to the number of grains per gallon.

With this solution, always use 70 c.cs. of the water to be tested, subtract 1 c.c. from the volume of soap solution used, and the remainder will give the number of grains of calcium carbonate present in, or equivalent to the magnesium and other salts present in, one gallon.

Estimation of the Hardness of Water.

Total Hardness.

281. Take 70 c.cs. of water in the stoppered bottle, and titrate with the soap solution. Subtract 1 c.c. from the volume of soap solution used, and the remainder gives the number of grains per gallon. Repeat the experiment.

Permanent Hardness.

Take about 170 c.cs. of the water in a flask and counterpoise on a rough balance. Boil the water for half an hour to remove the temporary hardness. Cool and make the liquid up to its original weight with distilled water, filter through a dry filter paper, take 70 c.cs. of the filtrate and titrate as before.

Subtract the permanent hardness from the total hardness, to obtain the temporary hardness.

The following method, which makes use of standard solutions of acid and alkali, is more accurate than that just described.

Temporary hardness is due to the presence of calcium or magnesium bicarbonates; permanent hardness mainly to calcium or magnesium sulphates or chlorides. The bicarbonates are decomposed by acids:

$$\underbrace{CaCO_3}_{100} . H_2CO_3 + \underset{98}{H_2SO_4} = CaSO_4 + 2H_2CO_3,$$

and may therefore be estimated by the use of standard acids.

The equation indicates that 98 parts of H_2SO_4 are equivalent to 100 parts of $CaCO_3$, or

1 c.c. N. H_2SO_4 containing 0·049 gr. H_2SO_4 = 0·050 gr. $CaCO_3$.

As the normal acid would be too strong, a certain quantity is diluted to 50 times its bulk to make the solution N/50, and 1 c.c. of this corresponds to 0·001 gram $CaCO_3$. If 100 c.cs. of the water to be tested are titrated, each c.c. of the acid used will indicate 1 part of $CaCO_3$ in 100,000 parts of water, *i.e.* 1° of hardness.

Place in a conical flask 100 c.cs. of the water, add methyl orange just sufficient to colour it, and run in the acid until the

colour changes. The number of c.cs. required represents the number of degrees of temporary hardness.

The sulphates and chlorides of calcium and magnesium are decomposed by Na_2CO_3, as also are the bicarbonates:

$$CaSO_4 + Na_2CO_3 = CaCO_3 + Na_2SO_4,$$
$$CaCO_3 . H_2CO_3 + Na_2CO_3 = CaCO_3 + 2NaHCO_3;$$

but the alkalinity of the solution added is not diminished by the decomposition of the bicarbonates. On this is based the determination of the permanent hardness.

Prepare a $N/50 . Na_2CO_3$ solution. Place 100 c.cs. of the water to be tested in a platinum dish, add a known excess of the Na_2CO_3 solution, and evaporate the mixture to dryness on the steam bath. The sodium bicarbonate is converted to carbonate during this process. Add water to the residue and filter. Rinse the dish and pass the rinsings also through the filter. Titrate the filtrate, which contains the excess of Na_2CO_3, with $N/50 . H_2SO_4$, using methyl orange as before. From the volume of sulphuric acid used, that of the Na_2CO_3 which was necessary to destroy the permanent hardness is found. Each c.c. used represents 0·001 gram of $CaCO_3$ in 100 c.cs. of water, or 1 part by weight of $CaCO_3$ in 100,000 parts of the water, *i.e.* the number of c.cs. of Na_2CO_3 used represents the permanent hardness in degrees.

Estimation of Sugars.

282. The aldehyde and ketone sugars (**116**) are readily oxidised, and are usually able to reduce certain metallic salts, especially those of copper, mercury and silver, in alkaline solution. The first is the one most commonly used, and the cupric salt is reduced, in an alkaline tartrate solution, into cuprous oxide. Any sugar which can react with phenylhydrazine will reduce alkaline copper solutions in this way.

The sugar itself is altered in a variety of ways. Dextrose is mainly oxidised to tartronic, gluconic, oxalic, acetic and other acids, but partly also changed by the action of the alkali into substances not more highly oxidised than the sugar itself, such as lactic acid. Various other complex

substances of aromatic and gummy character are produced. The actual amount of copper reduced is less than half that corresponding with the oxidation of dextrose into tartronic acid, which is the chief oxidation product.

It is therefore essential to use the materials and to carry out the reaction under strictly standardised conditions. The method was first systematically studied by Fehling,[1] and it is known by his name.

Fehling's solution. The materials used for this reagent must be as pure as possible, and the copper solution should be kept separate from the alkaline tartrate. The latter alters slightly in air, and if it is not quite fresh, a blank test should be made before proceeding with the sugar. If any copper is reduced a fresh tartrate solution should be made.

A. **Copper solution.** Dissolve 34·64 grams of pure crystallised copper sulphate in water and make up to 500 c.cs.

B. **Alkaline tartrate solution.** Dissolve 175 grams of Rochelle salt and 50 grams of pure sodium hydroxide in water; cool and make up to 500 c.cs.

5 c.cs. of each solution are taken for the test, making 10 c.cs. of mixed Fehling solution. For complete reduction this is equivalent to:

0·0500 gram of anhydrous dextrose, levulose or invert sugar.

0·0678 gram of dry crystallised lactose, $C_{12}H_{22}O_{11} . H_2O$.

0·0807 gram of anhydrous maltose.

These factors, of course, depend upon strict adherence to the conditions laid down for the experiment.

Estimation of sugar. Place 5 c.cs. of each solution in a 6-inch porcelain dish, add 40 c.cs. of water and heat to boiling. To the boiling solution, run in from a burette a solution containing about 1 per cent. of the sugar, until after two minutes' boiling the blue colour is completely removed. This shows approximately the amount of sugar

[1] *Ann. Chem.* 1849, **72**, 106.

solution required to reduce the copper. Now repeat the test, adding the requisite amount of sugar solution all at once to the boiling copper solution. Regulate the flame so that the mixture may begin to boil about one minute after the addition of the sugar, boil for exactly two minutes, and then test the liquid for unreduced copper. This may be done in two ways :

1. Pour a few drops of the liquid into 10 c.cs. of starch-iodide solution containing acetic acid. Any unreduced copper causes a separation of iodine (**272**), which gives a blue or purple colour with the starch.

2. Filter a few drops of the liquid into a test-tube, acidify with acetic acid, and add a few drops of ferrocyanide. A faint brown or chocolate colour indicates unreduced copper.

Repeat the reduction test until two titrations are recorded differing by only 0·1 or 0·2 c.cs., one showing a trace of unreduced copper and the other none. The mean of these two titrations is taken as the volume of sugar solution required to reduce the copper completely.

From this result the amount of sugar in the solution may be easily calculated.

Gravimetric estimation of sugar. Greater accuracy may be attained by weighing the cuprous oxide precipitated by a measured volume of the sugar solution from an excess of Fehling's solution. Defren's[1] method is a convenient one, and may be used for the determination of dextrose, maltose or lactose.

The Fehling's reagent is prepared as above. 15 c.cs. of each solution are mixed in a flask and diluted with 50 c.cs. of freshly boiled distilled water. The flask is placed in a boiling-water bath for 5 minutes, and then 25 c.cs. of the sugar solution (containing about 0·5 per cent. of the sugar) are added and the flask is allowed to stand in the boiling-water bath for 15 minutes. The cuprous oxide is now quickly filtered through asbestos or hardened paper in a Gooch crucible, washed until free from alkali, then quickly

[1] *J. Amer. C.S.* 1896, **18**, 749.

dried by subsequent washing with alcohol and ether, and heating to constant weight (half an hour) in the oven.

The cuprous oxide may also be ignited and weighed as cupric oxide, which Defren recommended, or it may be dissolved in nitric acid and the copper determined electrolytically (**357**).

From the weight of cupric oxide (W) the amount of sugar may be calculated by Defren's formulae :

$$\text{Dextrose} = W(0{\cdot}4400 + 0{\cdot}0_{4}37\,W).$$
$$\text{Maltose} = W(0{\cdot}7215 + 0{\cdot}0_{4}61\,W).$$
$$\text{Lactose} = W(0{\cdot}6270 + 0{\cdot}0_{4}53\,W).$$

SECTION II.

GRAVIMETRIC ANALYSIS.

GENERAL OPERATIONS.

283. Glass and porcelain vessels of various forms are employed in quantitative analysis, beakers or wide mouthed flasks for precipitation, the latter especially where prolonged boiling is necessary, and porcelain basins usually for evaporations.

It should always be borne in mind that the material of which these vessels are composed is slowly attacked by the fluids employed, even by pure water, but especially by alkaline liquids, small quantities of alkali and silica being removed. Porcelain suffers less corrosion than glass, and should be used for precipitations with alkali, as in the case of zinc carbonate (**294**A). A hard, resistant glass is to be preferred, containing a large proportion of lime and relatively little alkali, and in any case it is advisable to fill new vessels with water containing a little sodium carbonate, and boil for an hour or two before use.

Precipitation. The remarks already made on this matter (**14**) apply also to quantitative work. For such work, however, those reactions only are employed in which precipitates of minimum solubility are obtained. Should the solubility be appreciable, the precipitation may be aided by such means as the choice of a suitable temperature, a change in the composition of the solvent, as the addition of alcohol in the precipitation of lead and strontium sulphates (**303**, **306**), the addition of excess of the precipitant or of some other soluble substance having one ion in common with the precipitate, or allowing the liquid to stand for a time sufficient to ensure

complete precipitation. This last has the further advantage that many precipitates which are at first amorphous and bulky, become granular or crystalline on standing, and consequently more dense and more rapidly filtered and washed. It should be remembered, however, that wherever possible a large excess of the precipitant is to be avoided. It sometimes exerts a solvent action on the precipitate, as sodium chloride on silver chloride, and in any case adds to the difficulty of washing, and may thus lead to inaccuracy. When special conditions of precipitation are required in the examples which follow, they are indicated in the text.

Filtration. For quantitative work special filter paper must be used, uniform in texture and capable of retaining the precipitate perfectly, and so prepared that the ash left on incineration is reduced to a minimum. Glass funnels should be used, of which the angle is 60° and the stem neither very wide nor very short, and the funnel should be supported in a filter stand. The paper should fit closely to the funnel, after moistening with the liquid—water, alcohol, etc.—which is to be filtered, and if it does not, the folding must be modified so as to give the same angle as that of the funnel. The paper also should be of such a size that its edge is about one centimetre below the edge of the funnel, and that it is not more than half filled with the precipitate to be filtered.

Before proceeding to filter, the supernatant liquid, which is usually clear, should be tested with a few drops more of the precipitant, to ascertain that precipitation is complete. The clear liquid is then filtered first, pouring it down a glass rod held vertically and touching the edge of the beaker, which may be slightly greased at this point to help in preventing loss. The precipitate is allowed to remain in the beaker, thoroughly mixed with hot water or other liquid, and again allowed to settle. This washing by decantation may be repeated several times, and then the precipitate is carefully transferred to the filter, using the glass rod. Some of the precipitate will generally adhere to the beaker, and this must be removed with a short piece (1 cm.) of rubber tubing, or a special rubber cap, on the end of the rod.

Washing. Perfect washing of the precipitate is of the

utmost importance, and defects here are among the most frequent sources of error. It may be done partly by decantation, but must be completed on the filter, the upper edge of which also must be thoroughly washed. If the filter fits closely to the glass, as it should, it may be filled over the edge with the washing liquid without any loss of precipitate. In any case each washing must be allowed to drain away as completely as possible before adding the next (see par. **17**) and the washing continued until a few drops of the filtrate collected in a clean test tube show no trace of the impurities. Bulky or gelatinous precipitates retain a considerable quantity of liquid, and require special care. In such cases a great advantage is derived from the application of a gentle suction.

The suction filter. The time occupied in filtration and washing is greatly lessened by carrying out the operations under a slightly reduced pressure. The filter funnel is inserted through a rubber stopper into a suction flask, or other suitable receiver, as in the case of the Gooch filter (Fig 58). A small platinum cone, or one of hardened filter paper, having the same angle as the funnel, is placed therein, and the paper fitted as usual. Such a filter, properly prepared, will withstand a considerable diminution of pressure without rupture or any loss of the precipitate. The latter becomes less bulky, being compressed into the lower part of the filter, and thus washing is more efficient and the volume of washing liquid is much smaller. The suction may be applied by means of a water pump or other form of pump, or an aspirator.

The Gooch filter. This is an asbestos filter, arranged somewhat on the principle of the Soxhlet filter tube, dispensing with the use of paper, and at the same time securing all the advantages of filtration by suction. The Gooch crucible is similar in form and size to an ordinary platinum crucible, and is made in platinum, silica or porcelain, with the bottom full of fine perforations. When ignition is necessary, the crucible may be placed in a non-perforated tray, to protect the contents from direct contact with the flame.

The asbestos employed for the filter must be carefully selected and prepared. It must suffer no loss on treatment with acid or alkaline liquids, or on ignition. To prepare the filter, some

fine fibrous silky asbestos is well disintegrated, boiled with hydrochloric acid, then with caustic soda, again with dilute nitric acid, and finally well washed and kept in water in a closed bottle or flask. The crucible is fitted, by means of a broad ring cut from wide rubber tubing, into an ordinary conical funnel, or a cylindrical funnel, which is passed through a rubber stopper into the suction flask (Fig. 62). The pump is set in action, and sufficient of the asbestos fluid carefully poured into the crucible, to leave a thin mat of closely felted fibres. This is thoroughly washed, under continual suction, adding the wash water by means of a beaker and glass rod and not from the wash-bottle, and is then dried, ignited and weighed.

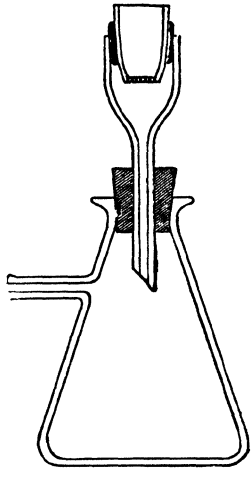

Fig. 62.

The crucible thus prepared is again placed in the funnel, the pump started, and the asbestos moistened with water. The liquid to be filtered is then carefully poured through the filter, and the precipitate added. Continuous suction must be maintained. As a rule, washing by decantation may be dispensed with, and the usual washing completed on the filter, avoiding the use of the wash-bottle. The precipitate is then dried and ignited, and the filter may be used again for several precipitates of the same kind, without renewal.

Drying precipitates. The funnel or Gooch crucible containing the precipitate is placed in the oven, dust being excluded by covering it closely with a watch glass or filter paper moistened and folded round the edges. The steam oven is sufficient to dry most precipitates, especially if they are to be ignited afterwards.

The weighed filter is used in cases in which the precipitate would be altered in an indeterminate manner by ignition, but this method is less accurate than the latter. The filter paper or Gooch crucible is dried in a steam or air bath at the same temperature as that at which the precipitate is afterwards

to be dried. Filter papers should be placed in weighing bottles or tubes (Fig. 52), or in paired watch glasses held together by a wire clip, or in a platinum crucible. The vessel is open while in the oven, is then cooled in the desiccator and closed while weighing. Paper is hygroscopic and must not be exposed to air before weighing. The heating should be continued for an hour in the first instance, and then in half-hour periods until the weight is constant.

Filtration and washing are then proceeded with as usual, the Gooch crucible dried as before, but the paper filter with the precipitate should have a preliminary drying in the funnel, and is then carefully transferred to the vessel already used, and dried to a constant weight. The weight of the precipitate is thus obtained by difference, the actual weight of the paper being unknown and unnecessary.

Ignition of the precipitate gives more accurate results than the weighed filter, and is resorted to in the majority of cases, either to ensure complete drying or to convert the precipitate into a more stable product of known composition. The dried precipitate is transferred to a weighed platinum or other crucible, which stands on a sheet of glazed paper, and adhering portions are detached from the filter as completely as possible by gently rubbing the soiled parts of the paper together. Any specks or dust from the precipitate are now swept into the crucible, and the paper is folded along the lines *ab* and *cd* (Fig. 63) so as to keep the soiled part inside, rolled tightly and bound with platinum or nickel-chromium wire. It is then held over the crucible and burned by touching it with the flame, which is at once removed, allowing the paper to burn quietly. The carbonised residue is then touched repeatedly with the flame until the carbon is completely burned. The ash is now dropped into the crucible and the whole ignited to constant weight.

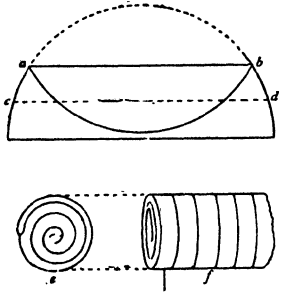

Fig. 63.

In some cases, such as ferric hydroxide (**296**), when the precipitate is not affected by contact with the burning paper, the precipitate and paper may be ignited together, even without previous drying. When any reduction takes place, as in the case of copper oxide (**284**A), special precautions have to be observed, and corrections applied; these are indicated where necessary.

The **filter ash** is of course included with the precipitate on ignition, and its value must be accurately known. This is always printed on the packet, but should be determined by the student himself, by burning six to ten papers in the platinum wire coil as just described (see Fig. 63), or placing them one at a time in the platinum crucible and incinerating to a white ash.

Platinum vessels must be used with great care, and certain precautions are always to be observed. Platinum is to be preferred to porcelain or silica in that it is a good conductor, quickly heated to redness, and not liable to fracture. But it must never be used in reactions with easily reducible metals, especially those of low melting point like lead and tin, nor in fusions with a strongly alkaline flux, nor with sulphides nor halogen compounds like silver chloride or bromide, nor in any reaction in which halogens are liberated, such as chlorate fusions. During ignition, the crucible should be supported on a triangle of platinum wire, or silica, or failing these, a clean pipe-clay triangle. The crucible must not come in contact with the reducing flame, or unburnt gas, as this causes the destruction of the platinum with formation of a grey carbide, and it must never be touched while hot with brass tongs. After use, the crucible should be cleaned by boiling if necessary with hydrochloric acid or fusing some potassium bisulphate or borax in it, and after being thoroughly washed, it should finally be polished with moist sea sand or powdered talc; this does not scratch the surface, and helps to preserve the metal.

ESTIMATION OF COPPER.

284. A. By Precipitation as Hydroxide and Conversion of this into Oxide by Ignition.

Weigh out accurately 0·8-1 gram of pure copper sulphate, $CuSO_4 . 5H_2O$, into a 500 c.c. beaker, and dissolve in about

100 c.cs. distilled water, adding a few drops of dilute HCl. Heat to boiling, and add NaOH solution as long as a precipitate forms. Cover the beaker with a clock-glass, and boil until the precipitate turns black. Allow to settle, test the clear liquid with litmus paper, and if alkaline, filter at once, washing twice by decantation with hot water, and then on the filter, until a few drops of the liquid from the funnel give no turbidity with $BaCl_2$ solution, even on standing for five minutes.

When the precipitate is completely washed, cover the funnel with filter paper, and dry in the steam oven. Transfer the precipitate as completely as possible to a weighed porcelain (or better, platinum) crucible, burn the paper, and let the ash drop into the crucible, first shaking the precipitate to one side. Moisten the ash with two drops of strong nitric acid to reoxidise reduced copper, dry gently over a small flame, and then ignite the whole strongly for 15-20 minutes. Allow to cool in the desiccator and weigh. Repeat the ignition until the weight is constant.

The usual method of calculating and entering results is given here as an example.

Weight of bottle and copper sulphate	(*a*), -	12·3312 grs.
„ „ „ „	(*b*), -	11·4060 „
„ copper sulphate used,	- -	·9252 „
„ crucible, copper oxide and ash	(*a*),	14·1510 „
„ „ „ „	(*b*),	14·1510 „
„ crucible, - - - -	-	13·8575 „
„ copper oxide and ash,	- -	·2935 „
„ ash, - - - - -	-	·0005 „
„ copper oxide, - - -	-	·2930 „

Now copper oxide is known to contain 63·57 parts of copper in 79·57 of oxide; therefore the amount of copper in 100 parts of the salt used is given by the expression

$$Cu = \frac{0{\cdot}2930 \times 63{\cdot}57 \times 100}{79{\cdot}57 \times 0{\cdot}9252} \text{ per cent.}$$

$$= 25{\cdot}30 \text{ per cent.}$$

Theoretically, Cu = 25·46 ,

Error = −0·16 „

285. B. **By precipitation as cupric sulphide, and conversion of this into cuprous sulphide by ignition with sulphur.**

Weigh out and dissolve the copper sulphate as above, add a few drops of HCl (the solution should be free from nitric acid), heat nearly to boiling, and pass H_2S gas until the liquid is saturated and all the copper precipitated as black CuS. Allow to settle, and filter at once. Wash with warm H_2S water until a few drops, on adding HCl and $BaCl_2$, give no turbidity. Keep both filter funnel and beaker covered with clock-glasses during the filtration and washing, to avoid oxidation of the sulphide. Dry the precipitate quickly, transfer to a Rose crucible (Fig. 64), adding the filter ash also, cover the contents of the crucible with powdered sulphur, and ignite in a current of dry hydrogen until all free sulphur is expelled. Allow to cool at first in the current of hydrogen, and when nearly cold place in the desiccator. After weighing, repeat the ignition with sulphur until the weight is constant. The residue is cuprous sulphide, Cu_2S. From the weight of this calculate the amount of copper as above.

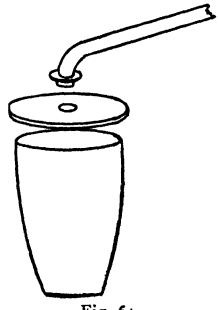

Fig. 64.

This method of estimating copper is chiefly employed in separations. The metal may also be precipitated as sulphide by adding $Na_2S_2O_3$ solution, or as cuprous thiocyanate, $Cu_2(SCN)_2$, by adding ammonium thiocyanate in presence of sulphurous acid, with subsequent conversion into Cu_2S by Rose's method. Copper cannot be precipitated completely as hydroxide in presence of non-volatile organic acids, sugars, etc.

ESTIMATION OF SULPHURIC ACID, (SO_4).

286. By precipitation as barium sulphate, $BaSO_4$. Use copper sulphate. Weigh out the salt as above, acidify the solution with hydrochloric acid, heat to boiling and add about 20 c.cs. of ammonium chloride solution, to render the subsequent precipitate of $BaSO_4$ more granular and therefore more easily

filtered. To the boiling liquid add slowly a boiling solution of $BaCl_2$ as long as a precipitate forms. Allow to settle, wash by decantation several times with hot water, and then on the filter until the water gives no turbidity with $AgNO_3$ solution. Dry, ignite in a platinum or porcelain crucible, and weigh. If much of the precipitate adhered to the filter, moisten the ash with a few drops of HCl, add two drops of H_2SO_4, to convert BaS into $BaSO_4$. Dry carefully, and ignite. Repeat the ignition till the weight is constant. From the weight of $BaSO_4$ calculate the SO_4.

ESTIMATION OF WATER OF CRYSTALLISATION.

287. A. **In crystallised copper sulphate, $CuSO_4 . 5H_2O$.**

Dry some of the finely powdered salt by pressing between several layers of filter paper, and then leaving it exposed to the air for a short time. Weigh two watch-glasses held with rims together in a wire clip. Place in the glass 1-1·5 grams of the salt and weigh again. Now heat in the air-bath to 120-130° for an hour, separating the glasses meanwhile. Allow to cool in the desiccator, and weigh with the glasses closed. Repeat the heating until the weight is constant. The loss represents $4H_2O$. To determine the remaining molecule of water, heat at 250-260° until a constant weight is obtained. Calculate the percentage in each case.

288. B. **In crystallised zinc sulphate, $ZnSO_4 . 7H_2O$.** This salt loses 6 molecules of water at 100°, the last molecule only at a low red heat. Proceed as above and determine the loss at 120-130°: for the last molecule use a porcelain crucible and heat with the burner to dull redness until the weight is constant.

289. C. **In crystallised barium chloride, $BaCl_2 . 2H_2O$.**

This salt loses all its water at 113°. Determine the loss at 120-130°.

A complete analysis of copper sulphate has now been affected. Tabulate the results thus:

	Found.	Calculated.
Copper (as CuO), - -		25·46
„ (as Cu_2S), - -		(25·46)
SO_4, - - - -		38·47
$4H_2O$, - - - -		28·86
$1H_2O$, - - - -		7·21
		100·00

ESTIMATION OF BARIUM.

290. By precipitation as barium sulphate. Use crystallised barium chloride. Weigh 0·7-0·8 grs. into a 500 c.c. beaker, add a little dilute HCl, heat to boiling and precipitate the $BaSO_4$ by gradual addition of a boiling solution of sulphuric acid or ammonium sulphate. Proceed exactly as in the estimation of SO_4 in copper sulphate. From the weight of $BaSO_4$ calculate the amount of Ba.

ESTIMATION OF CHLORINE.

291. By precipitation as silver chloride, AgCl. Weigh 0·5 grams of barium chloride, dissolve in water and acidify with nitric acid. Add a solution of silver nitrate until no more precipitate forms, and then either allow to stand overnight in the dark, or boil gently for fifteen minutes for immediate filtration. The liquid should be protected from strong light. Allow to settle, and filter, washing by decantation with hot water, and then on the filter until free from silver. Dry, and transfer the precipitate to a porcelain crucible, ignite over a small flame till the chloride begins to fuse, and weigh. Burn the filter, place the ash in the crucible and weigh again. This last increase, less the weight of the ash, gives the weight of silver reduced by the burning of the paper. Calculate the weight of chloride equivalent to this, and add to the weight of the precipitate. Or convert the reduced silver into chloride by placing the ash on the inverted crucible lid, adding two drops of strong nitric acid to dissolve the silver, and then hydrochloric to reprecipitate as chloride. Dry carefully and ignite until fused. This procedure may be simplified by using the Gooch filter (283).

This method is a very accurate one. Compare the volumetric estimation of chlorides, etc., by titration with standard silver nitrate (**263**).

A complete analysis of barium chloride has now been made. Tabulate the results :

	Found.	Calculated.
Barium, - - -		56·23
Chlorine, - - -		29·02
Water, - - -		14·75
		100·00

ESTIMATION OF SILVER.

292. By precipitation as silver chloride. Weigh out 0·5 gram of silver nitrate, dissolve in water and acidify with nitric acid. Precipitate the silver with a slight excess of hydrochloric acid, and complete the estimation as described above for chlorine. From the weight of silver chloride calculate that of the silver present.

293. Estimation of bromine in a bromide. Estimation of iodine in an iodide. Weigh out 0·3-0·4 gram of potassium bromide or iodide, acidify with nitric acid, precipitate silver bromide or iodide as directed for silver chloride. The Gooch filter should be used in these cases (**283**).

ESTIMATION OF ZINC.

294. A. **By precipitation as zinc carbonate, and conversion of this into oxide, ZnO, by ignition.** Weigh out about 1 gram of zinc sulphate, $ZnSO_4 . 7H_2O$, into a large porcelain dish, dissolve in about 100 c.cs. water, cover the dish with a clock-glass, heat to boiling, and slowly add solution of sodium carbonate in excess. Precipitation is not complete in presence of ammonium salts, and these, if present, must be expelled by boiling the liquid containing excess of sodium carbonate. Filter, wash several times by decantation, and then on the filter till free from sodium carbonate. To prevent reduction of ZnO in burning the filter, and consequent loss of zinc by volatilisation, the filter, after removing the precipitate as

completely as possible, may be moistened with a strong solution of ammonium nitrate and again dried, and then burned alone. Ignite the whole until the weight is constant, and from the weight of zinc oxide calculate that of the zinc.

295. B. By precipitation as zinc sulphide in alkaline solution, and weighing the anhydrous ZnS. Weigh about 1 gram of zinc sulphate into a 200 c.c. Erlenmeyer flask, dissolve in about 100 c.cs. of water, add AmOH in slight excess, heat nearly to boiling, and pass a rapid current of H_2S until the liquid is saturated. Nearly fill the flask with water saturated with H_2S, close it with a cork and allow to stand overnight. Filter, wash with water containing ammonium sulphide, and keep the funnel covered with a glass plate.

The dry precipitate is then transferred to a Rose crucible, the filter ash added, the whole covered with powdered sulphur and ignited in a stream of dry hydrogen. The ignition is repeated until the weight is constant.

ESTIMATION OF IRON.

296. By precipitation as ferric hydroxide, $Fe(OH)_3$, and ignition of this to oxide, Fe_2O_3. Weigh about 1·5 grams of ferrous ammonium sulphate, $Fe(NH_4)_2(SO_4)_2 . 6H_2O$, dissolve in 100 c.cs. water, acidify with sulphuric acid, and add 2-3 c.cs. strong HNO_3. Cover the beaker with a clock-glass, and boil gently for ten minutes to oxidise the iron to ferric salt. When oxidation is complete (ascertain this by mixing a drop of the solution with a drop of freshly prepared ferricyanide solution on a porcelain dish, when there should be no blue colour), add AmOH solution in slight excess, heat nearly to boiling, and filter at once, washing by decantation and on the filter until $BaCl_2$ solution produces no turbidity. If ammonium chloride was present in the solution, it must also be completely removed from the precipitate by washing, testing finally with $AgNO_3$ solution. The precipitate, if desired, may be at once ignited in a platinum or porcelain crucible, without previous drying, especially if the suction filter (**283**) has been used. Careful heating is necessary until the paper is charred, and ignition is then continued at a red heat until the weight is constant.

ESTIMATION OF ALUMINIUM.

297. By precipitation as hydroxide, $Al(OH)_3$, and ignition of this to the oxide, Al_2O_3. Weigh about 1·5 grams of potash alum, dissolve in 100 c.cs. water, add some ammonium chloride solution, and precipitate with a slight excess of AmOH. Boil until the excess of ammonia is nearly expelled, and then filter and wash. The precipitate must be strongly ignited, as it retains traces of water to a high temperature. As in the case of iron, previous drying is unnecessary.

ESTIMATION OF CHROMIUM.

298. A. **By precipitation as hydroxide, $Cr(OH)_3$, and ignition of this to oxide, Cr_2O_3.** Weigh out about 1 gram of chrome alum, $Cr_2(SO_4)_3 . K_2SO_4 . 24H_2O$, or about 0·7 gram of potassium dichromate, $K_2Cr_2O_7$, and dissolve in 100 c.cs. water. In the latter case, reduce the dichromate completely to chromium salt with sulphurous acid, or by heating with 5 c.cs. alcohol and an equal bulk of strong HCl, until all alcohol and aldehyde are expelled. Precipitate with AmOH in slight excess, and heat until the excess of ammonia is nearly removed and the liquid is quite colourless. Complete the estimation as for iron or aluminium.

B. **By precipitation as lead chromate, $PbCrO_4$, which is weighed.** This method is described under lead (**304**).

C. **By precipitation as Mercurous Chromate, Hg_2CrO_4, which is ignited to Cr_2O_3.** Weigh about 1 gram of potassium chromate or dichromate, dissolve in water, and in the case of a dichromate add a little sodium acetate. Precipitate with a solution of mercurous nitrate, allow to settle, filter, and wash the precipitate with a dilute solution of mercurous nitrate. When dry, ignite without burning the paper separately, and weigh the residue of Cr_2O_3.

ESTIMATION OF NICKEL.

299. A. **By precipitation as nickelous hydroxide, $Ni(OH)_2$, and conversion of this into oxide, NiO, by**

ignition. Weigh about 1 gram of nickel ammonium sulphate $Ni(NH_4)_2(SO_4)_2 . 6H_2O$, into a 500 c.c. beaker; dissolve in water, adding a few drops of HCl, precipitate with a slight excess of sodium hydrate or carbonate, and heat to boiling. Wash by decantation with boiling water several times, boiling at each washing, and then on the filter until $BaCl_2$ produces no turbidity. Dry, and ignite strongly in a platinum or porcelain crucible. The residue is NiO.

This residue may be easily reduced to metallic nickel by Rose's method of heating in a current of hydrogen (**285**). The reduced metal is allowed to cool at first in the current of hydrogen, and the ignition repeated until the weight of metal is constant.

B. **By precipitation as dimethylglyoxime salt, $[HO . N : (C . CH_3)_2 : NO]_2 Ni$, which is weighed.** Weigh 0.5-0.6 gr. of nickel ammonium sulphate, dissolve in about 250 cc. of water, and precipitate the nickel by adding about 50 cc. of a 1% alcoholic solution of dimethylglyoxime. Make the liquid just alkaline with ammonia, stir well, and warm on the steam for half an hour. Test the clear liquid with a little more of the reagent, filter through a Gooch filter, dry at 120° and weigh.

ESTIMATION OF COBALT.

300. By precipitation as hydroxide, and reduction of this to metal, which is weighed. This is the most accurate method of determining cobalt. Weigh about 1 gram of cobalt potassium sulphate and proceed as for nickel (**299**, A). The precipitated hydroxide should be boiled until it is almost black, and weighed as metallic cobalt.

ESTIMATION OF CALCIUM.

301. By precipitation as calcium oxalate, CaC_2O_4, which is converted by ignition into carbonate or oxide. Weigh about 0·5 gr. of Iceland spar into a beaker, and dissolve in dilute HCl, covering the beaker with a clock-glass. Boil to expel carbon dioxide, add AmOH in excess, and to the hot solution add ammonium oxalate solution as long as a precipitate forms. Boil for twenty minutes, and

then allow the precipitate to settle completely. Decant the clear liquid through a filter, and wash several times by decantation with hot water, and then on the filter until completely free from oxalate.

Dry the precipitate in the steam oven, place in a platinum or porcelain crucible, burn the filter and place the ash also in the crucible. The oxalate may be converted into carbonate by heating gently over a small flame, so that the bottom of the crucible is scarcely red. It is better, however, with the quantity used above, to convert directly into oxide, CaO, by heating for twenty minutes over the blowpipe, or with a Mecker burner, until the weight is constant. From the weight of calcium oxide calculate that of the calcium.

ESTIMATION OF OXALIC ACID.

302. By precipitation as calcium oxalate. Weigh about 0·8 gr. of pure ammonium oxalate, $(NH_4)_2C_2O_4 . H_2O$, dissolve in water, add a little acetic acid and heat to boiling. Precipitate calcium oxalate by adding excess of a clear solution of calcium acetate, and treat the precipitate as described above. From the weight of calcium oxide calculate the equivalent amount of (C_2O_4) or of oxalic acid.

ESTIMATION OF LEAD.

303. A. By precipitation as sulphate, $PbSO_4$, which is weighed. Weigh about 1 gram of crystallised lead acetate, $Pb(C_2H_3O_2)_2 . 3H_2O$, dissolve in 50-60 c.cs. water, and add a little acetic acid. Keep the liquid cold, and add dilute sulphuric acid until no more precipitate forms. Add alcohol equal in bulk to the liquid, mix well, and allow to stand overnight. This ensures complete precipitation of the lead sulphate, which is slightly soluble in water alone. Filter, and wash with 50 per cent. alcohol until all H_2SO_4 is removed.

Place the dry precipitate in a porcelain crucible, burn the filter on the crucible lid, and moisten the ash with two drops HNO_3 and one drop dilute H_2SO_4, to reconvert any reduced lead or PbS into $PbSO_4$. Dry carefully, and ignite the whole to dull redness until the weight is constant.

304. B. **By precipitation as chromate, $PbCrO_4$, which is weighed.** Weigh about 0·8-1 gram of lead acetate or nitrate, dissolve in water, add a little acetic acid and some sodium acetate solution, and precipitate the lead with excess of potassium chromate. Allow the precipitate to settle, filter through a weighed filter, wash first by decantation with cold water and then on the filter. Dry at 100° until the weight is constant. The residue is $PbCrO_4$.

This method may also be employed for the estimation of chromium.

305. C. **Lead may also be estimated** as sulphide, PbS, by the method given for copper (in acid solution, **285**), or for zinc (in alkaline solution, **295**).

ESTIMATION OF STRONTIUM.

306. By precipitation as sulphate, $SrSO_4$, which is weighed. Weigh about 1 gram of strontium carbonate, $SrCO_3$, and dissolve in dilute HCl, covering the beaker with a clock-glass. Add 60-70 c.cs. distilled water, and precipitate the strontium as sulphate, as described above for lead (**303**). Strontium sulphate is also slightly soluble in water.

Dry the precipitate and ignite it as described for barium sulphate. The residue is $SrSO_4$.

ESTIMATION OF MAGNESIUM.

307. By precipitation as magnesium ammonium phosphate, $MgNH_4PO_4.6H_2O$, and conversion of this by ignition into magnesium pyrophosphate, $Mg_2P_2O_7$. Weigh out about 1 gram of magnesium sulphate, $MgSO_4.7H_2O$, dissolve in 50-60 c.cs. water, add some AmCl solution, and then AmOH in excess. If a precipitate forms, add more AmCl until it redissolves. Now add excess of sodium phosphate and stir well, taking care that the glass rod does not touch the beaker. Remove the rod, rinsing it into the beaker, cover the beaker with a clock-glass, and allow to stand over-night.

Filter, and wash with a mixture of 1 part AmOH (·880) and 3 parts water, the precipitate being slightly soluble in water. Continue washing on the filter until the filtrate gives no turbidity with $AgNO_3$, after acidifying with HNO_3. Dry the precipitate,

transfer to a platinum or porcelain crucible, add the filter ash, and ignite, gently at first until water and ammonia are expelled, and then strongly until the weight is constant. The residue is magnesium pyrophosphate, $Mg_2P_2O_7$. From its weight calculate the weight of magnesium.

ESTIMATION OF PHOSPHORIC ACID.

308. Weigh out about 1 gram of sodium phosphate, $Na_2HPO_4.12H_2O$, dissolve in water, add some AmOH, and excess of magnesia mixture (a solution of magnesium sulphate or chloride in presence of AmCl and AmOH), and treat the precipitate exactly as described above. From the weight of $Mg_2P_2O_7$ calculate that of the phosphoric acid.

ESTIMATION OF ARSENIC.

309. A. **The above method** may also be used for this purpose. The arsenic must be in the form of arsenate, as sodium arsenate, $Na_2HAsO_4.12H_2O$. Arsenious compounds may be oxidised by heating in solution with HCl and a little $KClO_3$. When completely oxidised, make alkaline with ammonia, and precipitate with magnesia mixture in the form of magnesium ammonium arsenate, $MgNH_4AsO_4.6H_2O$. Treat the precipitate exactly as the corresponding phosphate, except that it must be ignited, with the Rose crucible cover, in a current of dry oxygen. When the weight of magnesium pyrarsenate, $Mg_2As_2O_7$, is constant, the amount of arsenic, or of arsenic acid, may be calculated.

This method is used for the separation of arsenic from antimony, and also, with a slight modification, from tin.

310. B. **By precipitation as arsenic trisulphide, As_2S_3, which is weighed.** Weigh about 0·8 gram of sodium arsenite into a 300 c.c. Erlenmeyer flask, dissolve in water, acidify with HCl, and add a few grams of tartaric acid. Fit the flask with a doubly-bored stopper carrying two right-angled tubes, one passing to the bottom of the flask for the supply of sulphuretted hydrogen, and the other ending just beneath the cork, and dipping into water in a second flask. This arrangement protects

the liquid in the first flask from air. The arsenic solution is heated nearly to boiling and is then saturated with sulphuretted hydrogen. After standing for some time until the precipitate has settled, the excess of sulphuretted hydrogen is removed from the liquid by passing a current of carbon dioxide gas, and the liquid is then filtered through a weighed filter. After washing with water containing sulphuretted hydrogen until the washings are free from chloride, the precipitate is dried at 100° and weighed.

If the precipitate contains sulphur, it must be converted into arsenic acid by oxidation with strong HNO_3, and the arsenic then estimated as magnesium pyrarsenate as in method A.

A volumetric method for the estimation of arsenic is given in par. **276.**

ESTIMATION OF ANTIMONY.

311. A. **By precipitation as antimony trisulphide, Sb_2S_3, which is weighed.** Weigh about 1 gram of tartar emetic, $K(SbO)C_4H_4O_6 . \frac{1}{2} H_2O$, and treat exactly as described for the precipitation of arsenic trisulphide, except that the solution should be kept gently boiling during the latter part of the precipitation with sulphuretted hydrogen. After removing the excess of gas with carbon dioxide, filter through a weighed filter, dry at 100° and weigh.

The precipitate still contains water, and usually also sulphur. Test a small portion of the dried precipitate by boiling with strong HCl ; if it dissolves completely, no free sulphur is present, and the sulphide must now be rendered perfectly anhydrous. To do this, weigh a portion of the precipitate (dried at 100° and preserved meanwhile in the desiccator) into a porcelain boat (**222**). Place this in a glass tube nine or ten inches long, and heat in a current of dry carbon dioxide until the precipitate is quite black. Allow to cool in the current of dry gas, weigh, and repeat the ignition until the weight is constant. If free sulphur is present, the same procedure is adopted, but the temperature must be higher. From this experiment the total weight of Sb_2S_3 in the original precipitate can be calculated, and hence the amount of Sb.

312. B. **By precipitation as trisulphide, and con-**

version of this into antimony tetroxide, Sb_2O_4, by oxidation with strong nitric acid. As described above, prepare the antimony trisulphide, filter through a weighed filter, dry at 100° and weigh.

Transfer the bulk of the precipitate, without examining for free sulphur, to a weighed porcelain crucible, and weigh. Moisten with a few drops of dilute HNO_3, keeping the crucible covered, and then carefully add strong HNO_3, little by little, until the precipitate is just covered. When the reaction subsides, heat gently on the steam until the sulphide is completely oxidised, and then evaporate to dryness. Add a little fuming HNO_3 to complete the oxidation, again evaporate to dryness, and then ignite, gently at first to expel sulphuric acid, and then more strongly, until the weight is constant. The residue is Sb_2O_4. Calculate the weight of this which would have been obtained from the whole of the original precipitate, and from this in turn calculate the antimony.

ESTIMATION OF TIN.

313. By conversion into stannic oxide, SnO_2, which is weighed.

A. *Treatment of the metal or its alloys with nitric acid.* Weigh about 0·3 gram of tin, in the form of fine powder or foil, into a 250 c.c. Erlenmeyer flask, add 20 c.cs. water, and then 50 c.cs. strong HNO_3 (sp. gr. 1·4). Cover the flask with a watch-glass and keep in the cold until the reaction has subsided. Heat towards the end, adding more HNO_3 if necessary, until the residue of stannic acid is perfectly white. Evaporate nearly to dryness in a porcelain dish to expel most of the nitric acid (chlorides must be absent or loss of tin will result by this method), extract with hot water, filter, wash and dry the precipitate. Transfer to a porcelain crucible, add the ash, and ignite over the blowpipe or Mecker burner until the weight is constant. From the weight of SnO_2 calculate that of the tin.

B. *Treatment of solutions of tin.* This may be done as above, in the absence of chlorides, but it is better to oxidise the tin to stannic salt, by warming with HCl and $KClO_3$, and precipitate the tin from this in the form of stannic acid. Carefully neutralise the oxidised solution with ammonia, add a quantity of strong solution of sodium sulphate or ammonium

nitrate, and warm on the steam for some time. Stannic sulphate and nitrate are thus completely decomposed by water, and the tin is completely precipitated as stannic acid. Filter, wash first by decantation, and then on the filter until free from chlorides, dry, ignite and weigh as SnO_2.

ESTIMATION OF MERCURY.

314. A. **By precipitating as mercuric sulphide, HgS, which is weighed.** Weigh about 0·5 gram of mercuric chloride into a 500 c.c. beaker, dissolve in 150 c.cs. water, acidify with HCl, warm gently and saturate with sulphuretted hydrogen. Allow the precipitate to settle, filter through a weighed filter, dry at 100° and weigh.

If the precipitate contains free sulphur, this may be removed by washing the dry precipitate on the filter with carbon disulphide, or by warming it in a porcelain dish with a strong solution of sodium sulphite, and again filtering and washing.

315. B. **By precipitating as mercurous chloride, Hg_2Cl_2, and weighing as such.** Weigh out a little mercurous nitrate, dissolve in water containing a few drops of dilute HNO_3, and precipitate the mercury with a solution of common salt. Allow to settle, filter through a weighed filter, wash with water until free from chloride, dry at 100° and weigh.

Mercurous compounds may also be oxidised with aqua regia, and the mercury then estimated as sulphide.

ESTIMATION OF BISMUTH.

316. **By precipitation as carbonate, and ignition of this to the oxide, Bi_2O_3.** Weigh 0·5 gram of bismuth oxide or carbonate, dissolve in a little nitric acid, and dilute with water. Add ammonium carbonate in excess, and heat nearly to boiling for about half an hour. Allow the precipitate to settle, filter and wash, dry, ignite and weigh the residue of Bi_2O_3.

ESTIMATION OF CADMIUM.

317. A. **By precipitation as carbonate, and ignition of this to oxide, CdO.** Weigh about 0·8 gr. of cadmium

sulphate, $3CdSO_4 . 8H_2O$, or 0·6 gr. cadmium carbonate, $CdCO_3$, dissolve in water or dilute HCl in a 500 c.c. porcelain dish, and proceed with the experiment exactly as described for the estimation of zinc as oxide (**294**). The residue is CdO.

318. B. **By precipitating as sulphide, CdS, and weighing in this form.** Weigh out and dissolve the cadmium salt as above, and nearly neutralise the liquid with sodium carbonate. Precipitate the cadmium by saturating the warm solution with sulphuretted hydrogen, allow the precipitate to settle, and filter through a weighed filter. Wash with water containing sulphuretted hydrogen, keeping the funnel covered with a clock-glass to prevent contact of the precipitate with air as far as possible, dry at 100° and weigh. If the precipitate contains free sulphur, this may be removed by the methods given for mercury sulphide (**314**).

ESTIMATION OF MANGANESE.

319. A. **By precipitation as carbonate, $MnCO_3$, which is converted by ignition into trimanganic tetroxide, Mn_3O_4.** Weigh about 0·8 gram of manganous sulphate, $MnSO_4 . 5H_2O$, and dissolve in water, precipitate with sodium carbonate and filter, exactly as described for zinc (**294**). The manganese is not completely precipitated, however, and the filtrate and the first two washings must therefore be evaporated to dryness. The residue is extracted with hot water, and the small amount of manganese oxide remaining is filtered through a small filter. The two precipitates are then ignited together at a strong red heat, keeping the crucible lid partly open to admit air, until the weight is constant. The residue is Mn_3O_4.

B. **By precipitation as phosphate, $MnNH_4PO_4$, which is ignited and weighed as pyrophosphate.** Weigh about 0.5 gram of manganous sulphate or of potassium permanganate, dissolve in about 150 c.c. of cold water, acidify with dilute sulphuric acid and reduce permanganate with SO_2 solution. Add about 20 grams of ammonium chloride, stir until this is dissolved, and add 10 c.c. of a cold saturated solution of microcosmic salt. Make the liquid slightly alkaline with ammonia, stir well, and heat

gently until the precipitate of manganese ammonium phosphate becomes crystalline. Allow to cool, filter through a Gooch filter, wash with very dilute ammonia to remove all trace of chloride, dry and ignite to $Mn_2P_2O_7$.

C. **By precipitation as anhydrous sulphide, MnS, which is ignited and weighed.** This method is also an accurate one, and is carried out exactly as described for the estimation of zinc as sulphide (**295**). See also par. **330**.

ESTIMATION OF SODIUM.

320. By conversion into anhydrous sulphate, which is weighed. Compounds of sodium with volatile or organic acids are readily decomposed by heating with a little strong sulphuric acid, forming sodium sulphate.

Place 0·5 gram of sodium chloride in a weighed platinum crucible, add two drops of sulphuric acid and cover with the lid. When the reaction subsides, warm gently until no more HCl is evolved. Allow to cool, add two more drops of sulphuric acid and heat, gently at first and afterwards to dull redness, until all free acid is expelled. Repeat this treatment till the weight is constant. The residue is Na_2SO_4.

This method applies also to the corresponding compounds of metals whose sulphates are not decomposed on heating, *e.g.* potassium, barium, lead, etc. See Molecular Weights, **147**.

ESTIMATION OF POTASSIUM.

321. A. **The method given above** for sodium may also be employed for potassium, in its compounds with volatile or decomposable acids.

B. **By precipitation as potassium platinichloride, K_2PtCl_6, which is weighed.** In a porcelain dish place 0·3-0·4 gram of potassium chloride, dissolve in a little water, add a few drops of dilute HCl, and excess of platinum chloride solution. The double salt separates slowly, but is slightly soluble in water. Evaporate, therefore, to dryness, allow to cool, and extract with 50-60 c.cs. alcohol. If this does not become yellow in colour, more platinum chloride must be added,

and the evaporation and extraction with alcohol repeated. Filter the heavy, yellow precipitate through a weighed filter, wash with alcohol, dry at 100° and weigh. The residue is K_2PtCl_6.

Instead of weighing the potassium platinichloride on a tared filter, it may be filtered, dried, and ignited in a porcelain crucible, when a residue of metallic platinum and potassium chloride, $Pt+2KCl$, is obtained.

This method serves for the separation of potassium from sodium, the platinichloride of the latter being soluble in water or alcohol.

C. **By conversion into perchlorate, $KClO_4$, which is weighed.** Weigh out some potassium chloride as above into a porcelain dish, dissolve in a little water and add an excess of perchloric acid, above 50 per cent. more than the theoretical quantity. Evaporate to a syrup on the steam, and then heat carefully over a small flame until white fumes of perchloric acid begin to appear. Allow to cool, add a little water to redissolve the salts, and again evaporate to complete the conversion of chloride into perchlorate. When the residue is almost dry, allow to cool, and mix it with 13-20 c.c. of alcohol containing 0·2 per cent. of perchloric acid. Allow to stand for a short time and decant the liquid through a Gooch filter. Repeat the decantation with alcohol, wash the residue of $KClO_4$ into the filter with more alcohol, dry at 130-140° and weigh the $KClO_4$.

This method also serves for the separation of potassium from sodium, the sodium perchlorate being soluble.

ESTIMATION OF AMMONIUM.

323. A. **By precipitation as ammonium platinichloride, $(NH_4)_2PtCl_6$.** The procedure is exactly that described above for potassium, and the precipitate may either be collected on a weighed filter and weighed as such, or ignited in the porcelain crucible, when metallic platinum alone remains.

B. **Ammonium is usually determined** by distillation of the ammonium compound with excess of caustic alkali, the liberated ammonia being collected in an excess of acid, and determined either as platinichloride, or volumetrically. For the latter method see par. **244.**

ESTIMATION OF NITRIC ACID.

324. A. **By reduction to ammonia.** If the nitric acid is free, it must be neutralised with sodium or potassium hydrate, and the resulting solution used.

Weigh out about 1 gram of potassium nitrate into the flask of the ammonia distillation apparatus (Fig. 55, par. **244**), add 10 grams of zinc dust and some fine iron filings, and connect the flask with the receiver, in which is placed 25 c.cs. of normal sulphuric acid. Other reducing agents may be used, such as the copper-zinc couple, aluminium amalgam, Devada's alloy, etc. To the flask add now a solution of 15 grams caustic soda in 80-100 c.cs. water, and warm gently. Continue the distillation until all the ammonia has passed over. This will occupy about one hour. Titrate the excess of acid in the receiver with normal alkali, and thus determine the ammonia. The calculation is simple.

325. B. **By ignition of the nitrate with silica, when nitric anhydride is expelled.**

Powder some quartz, or purify some fine sand by digesting with strong HCl, washing and drying. Place several grams in a platinum crucible, and ignite until the weight is constant. Now place about 0·5 gr. of the dried nitrate in the crucible, mix it with the quartz by means of a platinum wire, and weigh again. Heat gently for about half an hour, cool and weigh, and repeat till the weight is constant. The loss in weight is the nitrogen pentoxide, N_2O_5.

ESTIMATION OF CARBONIC ACID.

326. A. **By decomposing the carbonate and finding the loss in weight due to the escape of carbon dioxide.**

The decomposition may be effected either by ignition (in some cases only) or by treatment with acids.

Carbonates of copper, nickel, zinc, magnesium, etc., are readily decomposed on ignition, leaving an oxide of known composition. The carbonate should be dried at 110° before use.

All carbonates are decomposed by treatment with hydrochloric acid. The experiment may be carried out in the Schrötter apparatus (Fig. 65), or a simpler but less accurate form (Fig. 66). In the former, which is made entirely of glass, the hydrochloric acid (equal parts of strong acid and water) is contained in the tube *a*, while the escaping carbon dioxide is dried by being caused to pass through sulphuric acid in the tube *b*. The apparatus is charged with these acids and

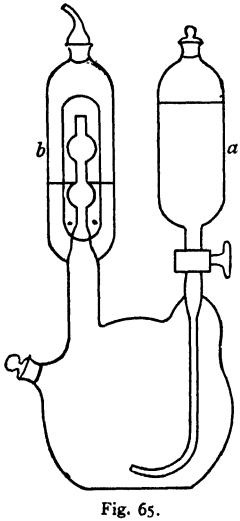

Fig. 65.

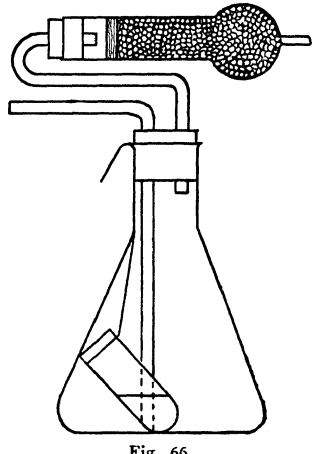

Fig. 66.

weighed ; about one gram of the carbonate is then placed in the flask, and the whole again weighed. The hydrochloric acid is then gradually introduced into the flask until all the carbonate is decomposed, when the remainder of the acid is run in. The flask is then gently warmed on a sand-bath, while a current of air is slowly drawn through the liquid by attaching an aspirator to the upper end of *b*. In this manner the carbon dioxide may be completely removed from the apparatus, which is then allowed to cool and weighed. The loss of weight represents the carbon dioxide.

In the simpler apparatus a small (50-100 c.cs.) Erlenmeyer flask contains the hydrochloric acid, the substance being placed in the small tube, which is suspended by means of a platinum wire or cotton thread held between the rubber stopper and the neck of the flask. The carbon dioxide is dried in the calcium chloride tube, and the other tube, which is drawn out to a narrow upturned capillary dipping into the liquid, serves for the admission of air. The procedure is similar to that with the Schrotter apparatus.

327. B. **By decomposing the carbonate and absorbing the carbon dioxide, which is then weighed.**

The apparatus shown in Fig. 67 may be employed for this method, which is a very accurate one. The weighed carbonate

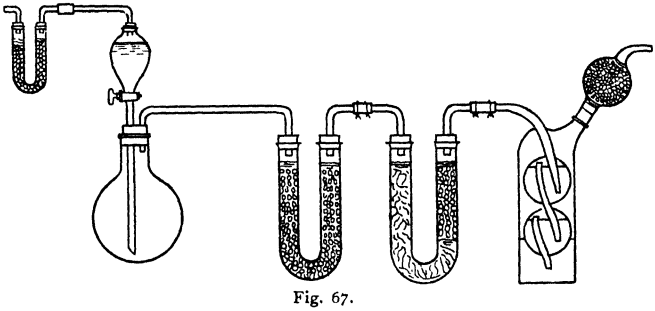

Fig. 67.

is contained in the round flask (100 c.cs.), which is fitted with a rubber stopper carrying a tap-funnel reaching to the bottom of the flask, and a delivery tube. The latter should be of one piece of glass, and connects the flask with the first U-tube. This is filled with anhydrous calcium chloride, to dry the gas. The second U-tube is filled for the first two-thirds of its length with small fragments of pumice impregnated with anhydrous copper sulphate (by soaking in strong copper sulphate solution and gently igniting the drained material), which removes hydrochloric acid from the gas. The remainder of the tube is filled with calcium chloride to retain traces of moisture from the copper salt, the two materials being separated by a plug of glass wool. The gas is then absorbed in the potash bulbs, which

contain a strong solution of caustic potash (1 part) in water (2 parts).

The potash tube is carefully weighed, and connected to the U-tube by a short piece of tightly-fitting rubber tube. The glass tubes should be in contact, and the rubber fastened on each by a single turn of thin copper wire. A little water is added to the carbonate in the flask, and hydrochloric acid is then slowly added from the funnel, until all the carbonate is decomposed. The flask is then gently warmed, and air slowly aspirated through the apparatus until 5-6 times the volume of the latter has been passed. The air thus drawn into the apparatus is first freed from carbon dioxide in the small soda-lime tube attached to the top of the funnel. The potash tube is then detached, and the ends are at once closed by means of rubber caps. It is allowed to cool in the balance-room for half an hour, and weighed, first removing the rubber caps.

Note.—In weighing comparatively large glass vessels such as these, the weight will be found to increase slightly during the operation of weighing, owing to slow condensation of moisture on the surface of the glass. The apparatus should be wiped carefully with a silk cloth immediately before weighing, taking care not to warm it by contact with the hands. Then weigh always at the same speed, and correct differences of weight will be obtained.

ESTIMATION OF SULPHUR IN SULPHIDES.

328. A. By oxidation to sulphuric acid, and conversion of this into barium sulphate, which is weighed.

1. Place 0·5 gram of finely-powdered zinc blende or copper pyrites in a nickel crucible containing a mixture of 3 grams potassium nitrate with 4 grams anhydrous sodium carbonate, or 3-4 grams of sodium peroxide with 2-3 grams carbonate. Mix by means of a platinum wire or glass rod, and heat the covered crucible, gently at first, and finally until the contents are completely fused. When cool, extract with hot water, filter, acidify with hydrochloric acid, and proceed as in the determination of sulphuric acid.

2. **The oxidation** may also be effected by fuming nitric acid. Weigh the sulphide into a flask, place a filter funnel in the neck, and through this add some of the acid. When the first violent reaction is over, warm the flask gently until the oxidation is complete, and any free sulphur dissolved. Rinse the funnel, dilute with water, filter and determine the sulphuric acid as usual.

3. **Solutions** of sulphuretted hydrogen, or of alkaline sulphides, may be oxidised with bromine water. This is added in excess, the liquid warmed for half an hour, then boiled to expel the free bromine, and the sulphuric acid determined with barium chloride.

B. **A volumetric method** of determining sulphuretted hydrogen by means of standard iodine is described in par. **279**.

SEPARATIONS.

ANALYSIS OF A SILVER ALLOY.

329. Weigh accurately one half of a threepenny piece, place in a porcelain dish, cover with a clock-glass, and add a little water and strong nitric acid. When the metal is dissolved, rinse the clock-glass, and evaporate to expel most of the acid.

Add water, transfer to a beaker, and precipitate the silver as chloride. Filter, wash only on the filter and not by decantation, adding the first two washings to the filtrate. Complete the washing and further treatment of the precipitate as described for the estimation of silver (**292**).

The copper in the filtrate may be estimated as sulphide (**284**) or thiocyanate. For the latter, the liquid must not contain free nitric acid. Neutralise this by adding ammonium hydrate until a slight precipitate is produced, then add some freshly prepared sulphurous acid, and excess of ammonium thiocyanate. The copper is completely precipitated as white cuprous thiocyanate, $Cu_2(SCN)_2$. Filter through a weighed Gooch filter, dry at 100° and weigh or convert to cuprous sulphide (**285**, B). Nickel, if present, may then be estimated in the filtrate as hydroxide or dimethylglyoxime salt (**299**).

SEPARATION OF IRON AND MANGANESE.

330. When these two metals occur together, as in minerals, the precipitation of iron as ferric hydroxide always brings down some of the manganese. To effect the separation of the metals, the iron (and aluminium, if present) is first precipitated as basic ferric acetate, the manganese being left in solution and determined in the filtrate.

For practise in the method, weigh accurately about 1 gram of ferrous ammonium sulphate and 0·8 gram of manganous sulphate into a 500 c.c. beaker, dissolve, and oxidise the iron by boiling with nitric acid. Add ammonium carbonate solution gradually, keeping the beaker covered, until a very slight precipitate remains undissolved. The liquid is now deep reddish-brown in colour. Now add a little acetic acid to redissolve this precipitate, and then a quantity of ammonium acetate solution. Heat to boiling, when the reddish-brown precipitate of iron acetate gradually forms, and continue boiling until the liquid, after standing a few minutes to allow the precipitate to settle, is perfectly colourless.

Filter the liquid as quickly as possible, transfer the precipitate to the filter, and wash twice with boiling water. To remove a small quantity of manganese which may be contained in the precipitate, redissolve the latter in hydrochloric acid, and reprecipitate the iron from this solution exactly as described above. Filter at once and wash the precipitate on the filter with boiling water, adding the first three washings to the filtrate. Combine the two filtrates and estimate the manganese as described below. The precipitate may be again redissolved in hydrochloric acid and the iron precipitated by ammonia, or it may be ignited at once, when ferric oxide remains.

To estimate the manganese, the carbonate or sulphide method (319) may be employed, but it is better, for the separation of manganese in mineral analysis, to proceed as follows. Add bromine water to the filtrate until it has a strong yellow colour, then add excess of ammonia, warm the liquid and allow to stand overnight in a warm place. Filter, wash and ignite the precipitate. The residue is Mn_3O_4. Test the

filtrate with more bromine water and ammonia to make sure that no manganese is left in solution.

SEPARATION OF IRON AND ALUMINIUM.

331. These metals are precipitated together as hydrates or basic acetates, and there is no reliable gravimetric method of separating them, although potassium hydrate is often employed for this purpose.

Weigh out about 1 gram each of iron alum and potash alum and dissolve in a little water. If an acid solution is being examined, it should be nearly neutralised. Pour the neutral or slightly acid solution into 50 c.cs. of a strong solution of potassium hydrate, which is kept just boiling, with constant stirring, in a platinum or silver dish. Ferric hydroxide is precipitated, and is filtered and washed, redissolved in hydrochloric acid and reprecipitated by ammonia, to free it from potash. The aluminium is determined in the filtrate by neutralising with hydrochloric acid and then precipitating with ammonia.

The most accurate method, however, is as follows. Make up the solution to 250 c.cs. with distilled water; of this solution take 100 c.cs. and determine the iron and aluminium together by precipitating with ammonia (**296**).

Then estimate the iron in the original solution by reducing portions of 25 c.cs. and titrating with standard dichromate (**260**). From the weight of iron found, calculate that of Fe_2O_3 in the combined $Fe_2O_3+Al_2O_3$ precipitate, and thus find the weight of alumina.

ANALYSIS OF DOLOMITE.

332. In this and all other complex analyses it is necessary first to make a complete qualitative analysis, and then to prepare a scheme for the separation and estimation of the constituents which have been found. In the case of dolomite and other limestones, it will be necessary in general to estimate the insoluble matter, iron, aluminium, manganese, calcium and magnesium, and also carbonic acid and moisture. Grind about 10 grams of the sample to fine powder, and place it in a weighing bottle.

333. Estimation of insoluble matter. Weigh about 2 grams of the powder into a porcelain dish, cover with a clock-glass and add hydrochloric acid little by little until the effervescence ceases. Add some more hydrochloric acid, a little nitric acid, and evaporate on the water-bath to complete dryness. Heat the residue with a little strong hydrochloric acid to dissolve all the soluble portion, add hot water, filter and wash, dry and ignite the insoluble matter. This consists mainly of silica and clay.

334. Estimation of iron and aluminium. If manganese is absent, the iron and aluminium hydroxides may be precipitated with ammonium chloride and ammonia, filtered, redissolved in hydrochloric acid, and reprecipitated with ammonia, to remove traces of calcium present in the first precipitate. The ignited residue of iron and aluminium oxides, after weighing, is dissolved by digesting for a long time with strong hydrochloric acid, the iron reduced with zinc or sulphurous acid and estimated with dichromate.

335. Estimation of manganese. If manganese is present, the iron and aluminium are precipitated as acetates, as described in par. **330**, and the manganese determined by precipitation as hydrated peroxide, and ignition to Mn_3O_4 (**330**).

336. Estimation of calcium. The filtrates and washings from the iron, aluminium and manganese precipitates are combined, and evaporated if necessary. If there is much lime in the mineral, take one half of the liquid, make alkaline with ammonia, and precipitate the calcium as oxalate, by adding excess of ammonium oxalate to the boiling liquid. Filter, wash two or three times, and redissolve the precipitate in hydrochloric acid. Again precipitate with ammonium oxalate, and estimate the calcium as oxide, as described in par. **301**. This solution and reprecipitation of the calcium oxalate removes any magnesium which may be present in the first precipitate.

337. Estimation of magnesium. Evaporate the filtrates and washings from the calcium precipitates to dryness in a 6-inch porcelain dish, and ignite on a sand-bath until nearly all ammonium salts are expelled. These, when present in excess, prevent the complete precipitation of magnesium.

To the residue add a little hydrochloric acid, heat on the

steam-bath, add hot water, and filter if necessary. Make the solution alkaline with ammonia, and precipitate the magnesium as magnesium ammonium phosphate. Treat this as described in par. **307.**

338. Estimation of carbon dioxide. Weigh accurately 1·5-2 grams of the powdered mineral into the flask of the carbon dioxide apparatus (**327**), and determine the carbon dioxide exactly as described.

The potash tube should be recharged when about half the quantity of carbon dioxide corresponding with the amount of potash it contains has been absorbed. This can be ascertained from the increase in weight in successive estimations.

339. Estimation of moisture. Weigh about 2 grams of the powder in a watch-glass, which is covered by a second watch-glass, the two being held together by a brass wire clip. Remove the upper glass and heat the powder for an hour in the air oven at 200° C. Allow to cool in the desiccator, after replacing the cover glass and clip. Repeat the heating until the weight is constant. The loss in weight is due to the moisture.

INDIRECT ESTIMATION OF ALKALIES IN ROCHELLE SALT.

340. The metals sodium and potassium are contained in Rochelle salt in equivalent quantities, and in many other compounds, such as glass, felspars, etc., they occur in varying proportions. In both cases they may be estimated, without separating the potassium as potassium platinichloride (**321** B), by the following method.

Weigh about 2 grams of Rochelle salt into a platinum crucible, and heat gently until the water of crystallisation is expelled and the salt begins to char. Increase the temperature gradually until the crucible is at a dull-red heat. The salt is now completely decomposed, and the metals remain as carbonates.

Extract with hot water, filter off the carbon and wash thoroughly with hot water. Acidify the solution with hydrochloric acid, and evaporate to dryness in a platinum dish on the water-bath. Dissolve in water and again evaporate to dryness,

to expel free hydrochloric acid, and then heat the residue to 150° in the air-bath until the weight is constant. This gives the weight of mixed chlorides.

Again dissolve in water, and determine the chlorine by titration with silver nitrate (**263**), or gravimetrically (**291**).

The amounts of sodium and potassium may now be calculated. Let A = weight of chlorides, B = weight of silver chloride, x = weight of sodium chloride and $(A-x)$ = weight of potassium chloride. Then we have

$$x\frac{143\cdot5}{58\cdot5}+(A-x)\frac{143\cdot5}{74\cdot5}=B,$$

from which x and $(A-x)$ may be found, and from these, the weights of sodium and potassium.

The indirect method may also be applied to the determination of mixtures of carbonates by estimating the carbon dioxide, mixtures of sulphates, and many others.

FELSPAR AND OTHER INSOLUBLE SILICATES.

341. The felspars are essential constituents of crystalline igneous rocks, and are all silicates of alumina with potash, soda or lime in varying proportions. Owing to alteration, they usually contain small quantities also of iron and magnesium. Orthoclase is the monoclinic felspar, a potash alumina silicate of the composition $KAlSi_3O_8$, which occurs in such rocks as granite and syenite. In addition to the constituents indicated in the formula, it always contains some iron, lime, magnesia and soda, while in other silicates, manganese, also, is nearly always present. The mineral must be very finely powdered, first in the percussion mortar (par. **5**) and then in the agate mortar.

342. Estimation of silica. Fusion with sodium carbonate or fusion mixture. Weigh accurately 1-1·5 grams of the finely powdered mineral into a platinum crucible, and add 5-6 times this weight of fusion mixture. (~~See note on the use and care of platinum vessels, par. 283.~~) Stir carefully with a thin glass rod or a stout platinum wire, and when the materials are thoroughly mixed, rinse the rod or wire with a little more of the carbonate. The crucible should not be more

than half full. Heat gently at first, until most of the carbon dioxide has escaped, and then more strongly until the mass is completely fused, and the reaction is judged to be complete. When cool, place the crucible in a porcelain dish, add a little hot water, and warm over the steam until the mass can be detached from the crucible and the latter rinsed and removed. Now cover the porcelain dish with a clock-glass, and carefully acidify the liquid by adding strong hydrochloric acid in small quantities. Rinse and remove the clock-glass, and evaporate the liquid to dryness. The gelatinous silicic acid which separates should be broken up frequently by stirring with a glass rod. In order to remove the hydrochloric acid more completely, the residue in the dish should be moistened with water and again evaporated; and to ensure complete drying, and also to render the silica less soluble, the dish and residue are then heated in the air-bath for an hour at 130-140° C. When cold, the residue is moistened with moderately strong hydrochloric acid, allowed to stand for half an hour, diluted with warm water, and heated on the steam bath. The insoluble silica is then filtered, washing by decantation with warm water, and again on the filter until quite free from chlorides. The silica may be at once transferred to a weighed platinum crucible, without drying, care being taken to wrap the upper edge of the paper over the moist silica, and the whole ignited, gently until dry, and then strongly until the weight is constant.

The filtrate usually contains a little silica, which may be removed by evaporating to dryness and repeating the above process. For most purposes, however, this is unnecessary.

343. Estimation of the heavy metals. The filtrate contains the iron, aluminium, calcium, magnesium and alkalies. Lead, if present, is precipitated with H_2S (**305** C). After filtering if necessary, the filtrate is boiled with a little nitric acid to oxidise iron, which is then precipitated together with alumina by adding a slight excess of ammonia and boiling. The iron and aluminium may be separated as in par. **331** or **334**. If manganese is present, the characteristic bluish-green colour usually appears during the fusion for silica. In this case separate the manganese by the method given in par. **330**. If barium be present, it is estimated as sulphate (**290**). Calcium

and magnesium are then estimated as in the analysis of dolomite (**336, 337**).

344. Estimation of alkalies. The alkali metals cannot be determined in the above analysis, since alkali carbonates are employed in the fusion, but they may be estimated by one of the following methods :

A. **Decomposition with ammonium chloride and calcium carbonate.** Weigh accurately about 1 gram of the mineral, which must be in the finest possible state of division, and mix well with an equal weight of pure ammonium chloride by grinding in an agate mortar. Then add 6 grams of pure calcium carbonate, mix well and transfer to a platinum crucible. It need scarcely be pointed out that the reagents used must be quite free from alkalies ; if there is any uncertainty, a blank experiment should be made, and if necessary the materials must be purified. The crucible is covered, heated gently for about ten minutes, and then for an hour with the lower portion of the crucible at a red heat. The alkali metals are thus converted into chlorides. When cold, the crucible is placed in a porcelain dish and the mass extracted with hot water and filtered. The filtrate contains sodium and potassium chlorides, with some calcium and possibly magnesium chloride. A little ammonia, ammonium carbonate, and ammonium oxalate are added, the liquid boiled and filtered, and the filtrate evaporated to dryness. It may still contain a little calcium or magnesium, to remove which it is again dissolved in water, and the treatment with ammonia and ammonium oxalate repeated. The liquid is again evaporated to dryness, and the residue ignited to expel ammonium salts. A little carbonate may remain from the decomposition of the oxalate ; to remove this, moisten with dilute HCl, and if magnesium be present it may be removed at this point by digesting for an hour or two with moist mercuric oxide. Filter, evaporate to dryness, and ignite to expel any mercuric chloride. Moisten with dilute HCl, transfer to a weighed platinum dish, filtering if necessary, and evaporate to dryness. Again add a little water and evaporate, to remove the last trace of acid. Finally heat in the air bath at 150° until the weight is constant. From the mixed chlorides thus obtained the potassium may be precipitated as platinichloride or perchlorate (**321**), and

the sodium found by difference, or the metals may be determined by an indirect method (**340**).

B. **Decomposition with hydrofluoric acid.** Weigh about 1 gram of the finely powdered mineral into a platinum crucible, moisten with water, and add 10 c.cs. of pure hydrofluoric acid. Allow to stand in the fume chamber for an hour, then warm gently and evaporate to dryness. The silica is removed as silicon fluoride, and the metals remain as fluorides. Now add dilute sulphuric acid, and evaporate in a platinum dish to remove hydrofluoric acid. As this is very poisonous, care must be taken not to inhale it. Dissolve the residue in water, and, without filtering, precipitate the sulphuric acid with excess of barium hydroxide, keeping the mixture hot on the steam bath. Iron, alumina, manganese, etc., are also precipitated. Filter, and from the filtrate remove barium and calcium with ammonium carbonate. If magnesium is present it may be removed as described above, leaving the alkali chlorides.

345. Water may be determined by the method given for dolomite (**339**), or if no other volatile matter be present, by ignition in a weighed crucible. **Carbon dioxide**, if present, is determined in a separate portion of the mineral (**326**, **327**).

ANALYSIS OF GLASS.

346. The methods given above for felspar (**342-345**) will serve, with little or no modification, for the analysis of all kinds of glass. Ordinary glass is mainly a mixture of silicates of lime and soda. Hard or "combustion" glass contains potash in place of a portion or the whole of the soda. Flint-glass, sometimes called crystal-glass or crystal, is a silicate of potash and lead. Common bottle-glass contains lime and alumina, together with the alkalies. Any kind of glass may be coloured by the use of certain metallic oxides, the colours obtained being similar to those seen in the borax bead (**202**), or microcosmic bead. Opaque glass is made by the addition of cryolite, arsenious oxide, bone-ash, or fluor-spar.

The fusion is carried out as in par. **342**, and the subsequent treatment is similar, except that **lead** must be separated as sulphide (**305** C) before the precipitation of iron, aluminium, etc.

In presence of lead, owing to the difficulty of removing the sparingly soluble chloride of lead from the residue of silica, nitric acid may be used after the fusion instead of hydrochloric acid, and should then be removed from the filtrate before the precipitation of sulphides, by evaporating to dryness, and repeating the evaporation with hydrochloric acid.

When any uncertainty exists regarding the composition of the glass, a preliminary qualitative analysis should be made, and a scheme may then be devised for the quantitative examination.

SILICATES DECOMPOSED BY ACIDS.

347. Silicates which are soluble in water (water-glass, etc.), and many that are insoluble, such as the zeolites and other hydrated mineral silicates, may be decomposed by treatment with concentrated acids, and do not require fusion. If lead or silver be present, nitric acid may be used instead of hydrochloric acid.

Prehnite and Natrolite may be taken as examples.

Estimation of silica. The finely powdered mineral should first be ignited, and the portion used for the determination of **water by ignition** may therefore be employed. Weigh about 2 grams in a platinum crucible, and determine the loss by heating over a Méker or Bray burner. This gives the total amount of water. Transfer the remainder to a porcelain dish, moisten with water, then cover with concentrated HCl, stirring frequently with a glass rod, and continue heating over the steam until the grittiness can no longer be detected by rubbing with the rod. Evaporate to dryness and proceed with the analysis as described in par. **342**.

The metals may be estimated in the filtrate as in the case of felspar (**343**).

ANALYSIS OF PYRITES, BLENDE, ETC.

348. Iron Pyrites is essentially a sulphide of iron of the composition FeS_2, while copper pyrites is a copper-iron sulphide, $CuFeS_2$. Other metals also may be present, and it may be necessary to estimate arsenic, lead, nickel, cobalt, calcium, zinc ;

there is usually also some insoluble matter of a siliceous nature. Similar remarks apply to zinc blende, ZnS, galena, PbS, and other mineral sulphides. A qualitative analysis should always be made.

Estimation of sulphur. Use about 1-1·5 grams, and determine the sulphur as described in par. **328**, by the use of fuming nitric acid, or acid of sp. gr. 1·4 with the addition of a little potassium chlorate from time to time. If any **insoluble matter** remains, filter and determine it as described in the case of dolomite (**333**). If **lead** is present (galena, etc.), either the insoluble matter should be washed on the filter with a warm solution of ammonium acetate, which dissolves $PbSO_4$, or the liquid evaporated to dryness with strong HCl, and extracted with HCl before transferring to the filter. To the filtrate, heated to boiling, add a hot solution of $BaCl_2$, and determine the sulphur as in par. **286**.

Saturate the filtrate with H_2S to precipitate **copper, lead, arsenic,** etc., and separate these by the methods used in qualitative analysis.

Copper and lead may also be determined in the filtrate, or in an aliquot portion of it, by the electrolytic method (**357**).

After removal of the sulphides, boil off H_2S, oxidise iron by boiling with HNO_3, and precipitate the **iron** with ammonia. If necessary, **aluminium** and **manganese** may be determined as in dolomite (**334, 335**).

Precipitate **zinc** from the filtrate by saturating with H_2S, and determine the ZnS as in par. **295**.

The presence of barium chloride in the liquid makes it preferable to estimate **calcium** and **magnesium**, if present, in a fresh portion of the mineral. Dissolve as before, separate the other metals as just described, and determine the calcium and magnesium as in dolomite (**336, 337**).

ANALYSIS OF BRASS, BRONZE, GERMAN SILVER, ETC.

349. Brass often contains small quantities of lead, tin and iron, while bronze, which is essentially an alloy of copper and tin, often contains also some zinc, lead, iron or other metals. A general method is therefore given for such alloys.

Weigh about 2 grams of the alloy (or more if small quantities of some metals have to be estimated), treat with HNO_3 (**313** A), and when the action is over, evaporate almost to dryness. If tin is present it remains as metastannic acid. Moisten the residue with HCl, allow to stand for an hour or more, add water and allow the metastannic chloride to dissolve. From this solution precipitate the **tin** with NH_4NO_3 as described in par. **313** B. To separate **lead**, evaporate almost to dryness with sulphuric acid ; dilute with water, allow to stand, filter the $PbSO_4$, and estimate the lead as in par. **303**. The filtrate contains copper, zinc, with possibly iron, nickel or manganese. Make up to 500 c.cs. Determine the **copper** in 100 c.cs. by precipitation as sulphide (**285**), by the thiocyanate method (**329**), or by electrolysis (**357**). If the first method be employed, it is advisable to redissolve the precipitate of CuS in nitric acid, evaporate to dryness with HCl, and reprecipitate the CuS, in order to remove a small quantity of zinc, or of nickel, which is usually precipitated along with copper in the case of brass and German silver respectively.

If some of the remaining metals are present only in small amounts, it is advisable to remove the copper from a larger volume of the solution, by saturating with H_2S ; or to make a determination of copper by two or more of the methods suggested above, and then combine the filtrates. In any case, mix the filtrates, and evaporate to dryness to expel H_2S. Dissolve the residue in a little water, transfer to a conical flask, nearly neutralise with KOH, add a little sodium acetate, and then saturate the warm solution with H_2S. Close the flask with a cork, and allow to stand overnight. Filter the ZnS and estimate the **zinc** as in par. **295**. From the filtrate, **iron** and **manganese** (manganese bronze) may now be separated, after boiling off H_2S, by the method given in par. **330**, and the filtrate from manganese will then contain **nickel**, which may be estimated as oxide or as metal (**299**), or by the method of electrolysis (**359**).

Aluminium bronze may be analysed by the above method, the aluminium being precipitated as hydroxide (**297**) after removing copper, or separated from manganese by the acetate method (**335, 330**).

350. Phosphor bronze is the name given to alloys of copper and tin, containing some phosphorus. The metals may be determined as above, and the **phosphorus** is estimated by treating the metal with HNO_3 (**313** A), or *aqua regia*, and evaporating to dryness. The residue, containing the tin as metastannic acid, together with phosphate of tin, is then dissolved by means of HCl and water (**349**). From this solution the phosphoric acid is precipitated by adding HNO_3 and excess of ammonium molybdate, and allowing to stand overnight in a warm place. The precipitate of ammonium phospho-molybdate is filtered, washed, dissolved in ammonium hydroxide, and the phosphoric acid precipitated as magnesium ammonium phosphate, which is then ignited and weighed as $Mg_2P_2O_7$ (**307**).

ANALYSIS OF SOLDER, PEWTER, ETC.

351. Cut the solder into fine shavings, weigh out 0·5 gram into a 250 c.c. Erlenmeyer flask, and proceed as in par. **313** A to estimate the tin. The residue of SnO_2 is never pure, but contains some SbO_2 and PbO when these metals are present. A better method is given in par. **353**.

To the filtrate add a slight excess of dilute sulphuric acid, and evaporate to dryness in a porcelain dish. Add 50 per cent. alcohol to the residue, allow to stand for an hour and filter. Wash the precipitate of $PbSO_4$ with 50 per cent. alcohol, and proceed from this point as in par. **303** A.

ANALYSIS OF TYPE METALS, BRITANNIA METAL, ETC.

352. Dissolve 1 gr. of the alloy in *aqua regia*, add 10 grams of tartaric acid dissolved in a little hot water, and make the solution alkaline with pure sodium hydroxide. Pour into a basin containing 30 grams of sodium hydroxide in 500 c.cs. of water, heat till gently boiling and pass sulphuretted hydrogen till saturated. Filter, wash with hot dilute sodium sulphide solution (prepared similarly to ammonium sulphide, par. **99**), and then once with boiling water. The filtrate and washings are used for the estimation of tin and antimony.

Dissolve the precipitated sulphides (mainly PbS) in nitric acid, evaporate to expel the excess of acid, and filter from any

trace of SnO_2, which must be preserved and added to the tin precipitate later. Evaporate the filtrate with sulphuric acid and estimate the **lead** as in **303** A. Precipitate the **copper** in the lead filtrate with H_2S and estimate as in **285** B. Precipitate **zinc** and **iron** with sodium carbonate, wash, dry, ignite and weigh as ZnO (**294**) and Fe_2O_3 together. If present in sufficient quantity, the iron may be estimated separately in the lead filtrate, as in the separation from manganese (**330**).

To estimate the **antimony**, acidify the first filtrate with hydrochloric acid, warm and allow to stand to complete the precipitation of the sulphides. Filter and wash with H_2S water. Remove the precipitate from the filter paper by means of a silica or platinum spatula to a porcelain dish, dissolving any precipitate left on the paper in hot strong HCl. Add HCl to the contents of the dish, heat gently and add from time to time a crystal of $KClO_3$. Boil to expel chlorine, rinse the cover, filter into another porcelain dish, and evaporate to a few c cs. Add a hot solution of 20 grams oxalic acid (see par. **158**, 1), transfer to a beaker, dilute with boiling water to 300 c.cs. and pass H_2S until all the antimony is precipitated. Treat the precipitate as in **311** A.

To estimate the **tin**, add excess of HCl to the filtrate, heat and add solid $KMnO_4$ in small quantities until there is a slight precipitate of MnO_2. The oxalic acid is now destroyed. Redissolve the MnO_2 by adding a few drops of $FeSO_4$ solution, pour the liquid into a flask, and pass H_2S to precipitate the tin. Filter, wash with H_2S water containing a little ammonium nitrate. The precipitate contains SnS and S. Wash and dry. Remove the precipitate from the paper, burn the filter paper, place the ash in the crucible, add a few drops of HNO_3 and heat strongly. Now add the precipitate, and any SnO_2 obtained earlier, and heat in the open crucible to convert the sulphide to SnO_2. Continue heating until the weight is constant.

ANALYSIS OF SOLDER AND TYPE METAL (WHITE METALS).

353. The estimation of tin by HNO_3 is unsatisfactory, as the precipitate always contains SbO_2 and some PbO.

To estimate the **tin**, titration with $FeCl_3$ solution is preferable. Proceed as follows :[1]

If the metal is completely soluble in HCl (*e.g.* solder) weigh 1 gr. into an 8 oz. flask, add 180-200 c.cs. of pure strong HCl, boil till dissolved and titrate *rapidly* at the boiling point with $FeCl_3$ solution. The best strength of solution is 1 c.c. = ·02 gram of tin, and it should be standardised with *pure* $SnCl_2$, prepared by dissolving *pure* tin in hot strong HCl as in the estimation. One drop of the solution in excess gives a distinct yellow colour in *hot strong* solution.

If the metal is not completely soluble, weigh out 1 gram, boil with 75 c.c. HCl till the action ceases, and add 5-10 grams of piano wire. This precipitates Sb, Cu, etc. Add thin strips of copper until a strip remains bright. All the Sb and As will now be precipitated. Add 40 c.cs. hot boiled water, boil and filter rapidly into another flask, washing out the flask and filter paper with hot dilute HCl. Keep from the air as much as possible. Precipitate the tin at once by adding strips of zinc until some remain undissolved. Test a portion of the liquid with H_2S. If the precipitate is white, no tin is present. Dilute and decant, as closely as possible, through a filter. Wash any particles back into the flask by making a hole in the filter and pouring 180 c.cs. of strong HCl through. Heat to boiling till all the tin is dissolved, and titrate the boiling solution rapidly with $FeCl_3$.

354. Antimony may also be estimated volumetrically.[2] Boil 1 gram with 100 c.cs. HCl in a 16 oz. flask until the action ceases. Add $KClO_3$ to dissolve the black powder of antimony. Dilute to nearly twice the bulk and boil off the chlorine (test by smell). Cool, and when quite cold, fill the flask with CO_2, add 20 c.cs. of a fresh 20 per cent. solution of KI and titrate as rapidly as possible with $SnCl_2$ (20 grams $SnCl_2 . 2H_2O$ in 300 c.cs. HCl, made up to 1 litre. Keep the solution under CO_2 and standardise, every time it is used, against $K_2Cr_2O_7$, 16 grs. per litre). Add starch paste near the end of the titration, and complete by adding $SnCl_2$ till the blue colour disappears.

[1] L. Parry, *The Assay of Tin and Antimony.*

[2] L. Parry, *loc. cit.*

ELECTRO-CHEMICAL ANALYSIS.

355. The estimation of metals by electro-deposition can be easily carried out in nearly all cases, and is of very frequent application. According to Faraday's law, the weight of metal deposited from an electrolyte is proportional to the quantity of electricity which passes through the electrolyte, and is given by the relation that 1 gram-equivalent of any substance is deposited by 96,540 coulombs, that is, by a current of 1 ampere in 96,540 seconds, or 26 hours 49 mins. The electromotive force required depends upon the back E.M.F. of polarisation of the electrolyte, and since the use of this minimum E.M.F. would involve the

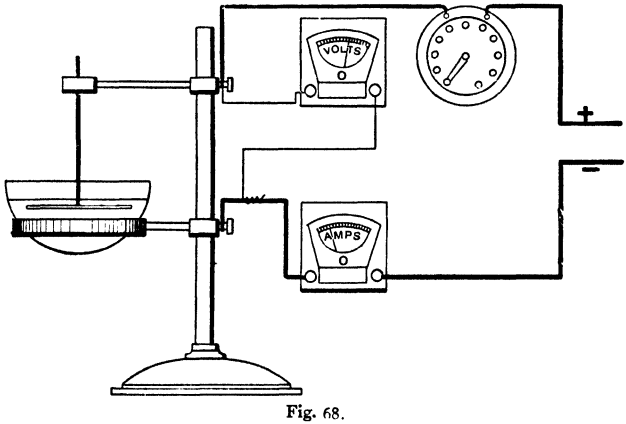

Fig. 68.

expenditure of an infinitely long time in order to complete the deposition, in practice a current is used at 1 or 2 volts in excess of the polarisation E.M.F. In order to measure and to regulate the current, an ammeter and a variable rheostat are included in the circuit, while a voltmeter is placed in a branch circuit. These instruments should be fairly accurate, especially for experiments on the separation of one metal from a solution containing several. The current from a secondary battery of two or three cells is sufficient for most purposes.

The general arrangement of the apparatus is shown in Fig. 68,

which requires little explanation. The platinum dish forms the cathode, while the anode consists of a platinum disc, which may be perforated, or a flat spiral of stout platinum wire. As an alternative, the solution may be placed in a beaker, with the platinum cone (Fig. 69) as cathode, and the spiral anode. Many forms of electrodes are in use, the platinum dish being most commonly used as cathode. If the latter be roughened by sand-blasting, the deposit will be more firmly adherent. The electrodes must, of course, be perfectly clean and free from any trace of grease, or good deposits cannot be obtained.

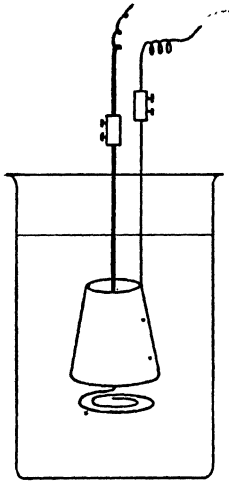

Fig. 69.

The time required for a deposition is generally much longer than that calculated from Faraday's law, because some of the current is used in bringing about other decompositions. It is therefore necessary, as a rule, to apply a delicate chemical test to a small portion of the liquid in order to ascertain whether the deposition is complete.

At a temperature 40° to 50° above the ordinary room temperature most depositions take place more rapidly. The saving of time is due to the increased conductivity of the electrolyte, and to the fact that its composition is kept more uniform by the aid of the convection currents which are set up. The platinum basin may be heated by a suitable water bath, or by a small flame placed several inches below the dish, but the flame must on no account come into direct contact with the basin or the deposit may be loosened. The beaker (Fig. 69) may be heated on a sand bath or asbestos sheet.

356. Rotating electrodes. When stationary electrodes are employed as described above, the current density must be very small or the deposit of metal will be powdery and non-adherent. But if one of the electrodes be rotated, by means of a water-turbine or small electric motor, at from 30-120 rotations

per minute, the C.D. may be very much increased, producing quite firm deposits, and thereby greatly lessening the time required. By this means a deposition may be completed in a few minutes, which would have required several hours with stationary electrodes. The arrangement of the apparatus is shown in Fig. 70, The disc carried on the rotating anode is intended to prevent particles of dirt off the moving parts from falling into the basin.

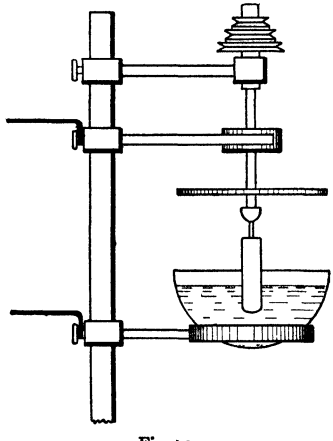

Fig. 70.

357. Estimation of copper. Weigh about 1 gram of copper sulphate into the weighed platinum dish, dissolve in water, and add a little nitric acid. Copper may be deposited in presence of 8-10 per cent. of nitric acid or sulphuric acid. The current density should be 1-1·5 amperes per sq. decimetre at the cathode, the electromotive force 2-2·8 volts, and the time required is about 3 hours, or rather less if the temperature be raised to 50-60°. It is often convenient to carry on a deposition overnight, in which case the C.D. should be reduced to 0·2-0·3 amp. per sq. decimetre, and a little more nitric acid should be added, lest it be all reduced to ammonia. The deposit of copper should be bright red ; too high a C.D. tends to produce a darker coloured and non-adherent deposit. The addition of about 0·5 gram of hydroxylamine sulphate improves the deposit from solutions containing sulphuric acid, but is not necessary.

When the deposition is judged to be complete, add some water to the solution so that its level is raised 4-5 mm. If, after 15 minutes longer, no film of copper can be seen on the newly covered portion of the cathode, withdraw a little of the solution and test with ferro-cyanide (**154**, 4). When no trace of copper can be detected, syphon off the acid liquid, replacing it with

distilled water so as to keep the anode covered, then quickly remove the cathode, rinse two or three times with distilled water, then twice with small quantities of alcohol, dry in the steam oven for 5-10 minutes, and weigh as soon as cold.

Copper may always be deposited electrolytically from a solution of the **double cyanide,** $CuK_2(CN)_3$, containing a slight excess of potassium cyanide. A voltage of 2·5 is sufficient, with a C.D. of 0·2-0·5 and a temperature of 15-16°. The experiment is completed as described above.

358. Estimation of zinc. This metal cannot be deposited from solutions which contain more than a trace of mineral acid. The **oxalate method** gives good results. Since the platinum cathode, after dissolving the zinc, is left covered with a film of platinum black, it is better first to deposit a film of copper, or to use nickel electrodes. Weigh about 1 gram of zinc sulphate, dissolve in water and add 4-5 grams of potassium or ammonium oxalate. Use a C.D. of about 1 ampere, E.M.F. 3·5-4·5, *t* 50-60°. The solution should be kept slightly acid by adding small quantities of oxalic or tartaric acid. To ascertain the end point, test with ferrocyanide.

Cyanide method. A solution of the double cyanide is electrolysed with a C.D. 0·5-1, E.M.F. 4·5-6, *t* 20-50°.

359. Estimation of nickel and cobalt. The most satisfactory method is the electrolysis of an ammoniacal solution of the double sulphate with potassium or ammonium, recommended by Fresenius and Bergmann. Dissolve about 1 gram of the metallic sulphate, add 4-5 grams ammonium or potassium sulphate and 30-40 c.cs. ammonia solution. Use a C.D. of 0·5-1·5, E.M.F. 2·5-3·5, *t* 15-50°. Test for the end point with sulphuretted hydrogen.

They may also be estimated by the **cyanide** method as described for copper (**357**). The **oxalate** method as described for zinc (**358**) is also applicable.

360. Estimation of iron. Ammonium oxalate gives the best means of depositing iron, and nitrates must be absent. Pour the solution of the iron salt, especially if in the ferrous condition, into a warm solution of an excess of ammonium oxalate. The precipitated iron oxalate should dissolve completely. Use a C.D. of 1-1·5, E.M.F. 3·6-4·3, *t* 15-50°. If a little

ferric hydroxide separates during the electrolysis, dissolve it by adding a little oxalic or tartaric acid. A small quantity of borax in the electrolyte improves the deposit. Test for the end point with HCl and KSCN, and wash and dry the deposited iron as rapidly as possible to prevent rusting.

361. Estimation of cadmium. The method described for copper (**357**) may be used, with a solution *slightly* acid with H_2SO_4. Use 0·5-1 gram of cadmium sulphate, and electrolyse with a C.D. of 0·6-1 ampere, E.M.F. 2·5-3 volts, *t* 50-75°.

The **cyanide** method gives good results, using excess of potassium cyanide. C.D. 0·3-0·5, E.M.F. 3·5-4, *t* 20°.

The end point is ascertained by testing the solution with H_2S.

362. Estimation of silver. The cyanide method gives the best results for silver. The neutral solution of the metal is mixed with excess of a freshly prepared solution of potassium cyanide, and electrolysed. C.D. 0·2-0·5, E.M.F. 3·7-4·8, *t* 20-60°. If allowed to run overnight, the C.D. should be reduced to 0·08-0·15. Ascertain the end by testing a portion with HCl, boiling off HCN.

363. Antimony and tin may be deposited from solutions of the sulpho-salts, the sodium salt being preferable for antimony, and the ammonium salt for tin. For antimony use a C.D. of 1-1·5, E.M.F. 1-1·8, *t* 70-80°; and for tin, C.D. 1-2, E.M.F. 4-4·5, *t* 50-60°.

ANODE DEPOSITS OF PEROXIDE.

364. Estimation of lead. Although this metal may be deposited on the cathode, it is difficult to prevent oxidation, and a more convenient method is to deposit the dioxide, PbO_2, on the anode, in presence of at least 10 per cent of nitric acid. The matt platinum basin may be used as anode. C.D. 1-1·5, E.M.F. 2·5, *t* 15-50°. When completed, wash rapidly with water and alcohol, and dry the deposit at 200° until the weight is constant. Chlorides must be absent.

365. Estimation of manganese. A hydrated peroxide of manganese is deposited on the anode from a solution containing 8-10 grams of ammonium acetate and 2-3 grams of chrome alum. The latter prevents the separation of oxygen at the anode, which would loosen the deposit. C.D. 0·6-0·9, E.M.F. 3-4·5, *t* 70-80°.

Chlorides must be absent. The deposit after washing is ignited and weighed as Mn_3O_4.

ELECTROLYTIC SEPARATIONS.

366. Copper alloys may be examined by the method of electro-deposition, and the copper separated from the other metals by a suitable arrangement either of the E.M.F. or of the chemical composition of the electrolyte. Thus the solution of **brass** or of **bronze** in nitric acid (**349**) may be made up to 500 c.cs., and 100 or 200 c.cs. taken for electrolysis. If hydrochloric acid be used in dissolving, it must be removed by evaporating with sulphuric or nitric acid. The **copper** may then be deposited from acid solution, in which no zinc, iron, nickel, etc., can come down (**357**). **Lead**, if present, will appear as lead dioxide on the anode, in nitric acid solution (**364**), and is thus determined simultaneously with copper, by weighing the anode also. To obtain the **zinc**, evaporate the acid liquor and washings to dryness in a porcelain dish to remove acid, dissolve in a little hot water, and add excess of ammonium oxalate. Electrolyse as described in par. **358**. As there indicated, the cathode should be filmed with copper before depositing zinc. If **iron** is present in the brass, it will deposit along with the zinc, and may be determined by dissolving the deposit, after weighing, in dilute sulphuric acid, which converts the iron into ferrous sulphate, and then titrating with standard permanganate (**248**).

Silver coinage may be analysed by dissolving in nitric acid and precipitating the silver as chloride (**292**), which may then be weighed as such, or dissolved in KCN solution and electrolysed (**362**). The copper in the filtrate is determined as in par. **357**.

Nickel coinage is dissolved in nitric acid, the copper deposited from this solution (**357**), and the liquor then evaporated with a little H_2SO_4 to remove HNO_3. Strong ammonia is added, and the nickel deposited as in par. **359**.

German silver contains copper, zinc and nickel. From the nitric acid solution copper is deposited (**357**). Zinc may then be precipitated as ZnS, and the filtrate, after evaporating to remove H_2S, and adding ammonium oxalate, electrolysed for nickel (**359**).

THE NITROMETER AND GAS-VOLUMETER.

367. This apparatus affords an easy and rapid method for estimating the volume of gas evolved in various chemical reactions, and was devised by Lunge[1] for this purpose, with special reference to the analysis of nitrous vitriol. It may be used also for determining the various gases in a mixture, by absorption, since it resembles the Bunte gas burette (**375**).

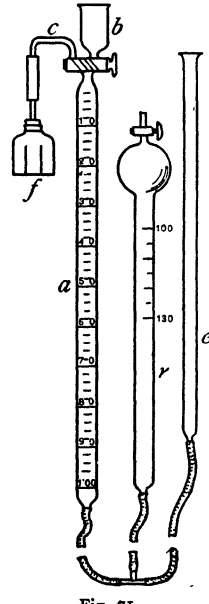

Fig. 71.

The apparatus (Fig. 71) consists of a graduated tube *a*, which may be put into communication either with the cup *b* or the side tube *c*. This graduated tube is connected by means of a T-tube and stout rubber tubing to the pressure tube *e* and the reduction tube *r*. The latter is not quite necessary, but was introduced by Lunge[2] to obviate the calculations otherwise required in the correction of gas volumes for temperature and pressure. It is of great advantage when a number of samples are analysed consecutively, as in technical work, and its use is simple. The temperature and pressure at the commencement of work are observed. The volume occupied under these conditions by 100 c.cs. of dry air is then calculated. This volume of air is introduced into the reduction tube at atmospheric pressure, and the tap at the top of the tube closed. (The top of the tube may terminate in a capillary instead of a tap, and this is sealed off after the air is introduced.) If moist gases are to be measured, and mercury is used in the apparatus, a small drop of water is placed in the reduction tube. When an experiment is made the gas passes into *a*. The level of the liquid in *a* is made equal to that in *e*, and the tap closed; the gas is thus at atmos-

[1] *Journ. Soc. Chem. Ind.* 1890, 21. [2] *Ibid.* 1890, 547.

pheric pressure. The three tubes are then adjusted so that the levels of the liquid in *a* and *r* are the same when that in *r* is at the 100 c.cs. mark. The gases in *a* and *r* are thus at the same temperature and pressure, and since that in *r* now occupies the volume which it would have at N.T.P., it follows that this is true also of the gas in *a*.

The gas burette (Fig. 67) may be used as a gas volumeter for many of the experiments given below, by reversing it so that the tap *d* is at the top, and to this the reaction bottle is attached.

368. Estimation of N_2O_5 in nitrates.

The reaction bottle, *f*, is not used for this experiment.

Fill the apparatus with mercury. In the cup place 0·1 gram of a nitrate and dissolve it in 1 or 2 c.cs. of water. Draw this carefully into the nitrometer, without allowing any air to enter. Rinse the cup with 1 c.c. of water, and draw this also into the tube. If any air has got in, raise the pressure tube till it is driven out, but do not send out any of the liquid. Pour into the cup 5 or 6 c.cs. of strong sulphuric acid, run this into the tube and rinse the cup with 10 c.cs. of acid. Remove the tube from the clamp. Turn it horizontally and then quickly back to the vertical position several times. In this way the contents are mixed. Clamp again and allow to stand for 15 to 20 minutes, repeating the mixing at intervals. The sulphuric acid liberates nitric acid, which by the action of the mercury is reduced to nitric oxide. When there is no further increase of volume, bring the gas to atmospheric pressure, by pouring into the pressure tube a quantity of acid, equal and of similar strength to that in the nitrometer, and equalising the levels. Read the volume of the nitric oxide, and correct for temperature and pressure, or use the reduction tube as already described.

$$KNO_3 \rightarrow NO.$$

101 grms. $\rightarrow$ 22,410 c.cs.

$\therefore$ each c.c. of NO corresponds to $\frac{101}{22410} = 0{\cdot}00451$ grm. KNO_3.

The decomposition of the nitrate may be carried out in a special decomposition flask instead of in the burette itself, or in another nitrometer, which need not be graduated. When the decomposition is complete, the gas is transferred to the volumeter for measurement.

For experiments other than the analysis of nitrates or of nitrous vitriol, the reaction is carried out in a small flask, or better, in a reaction bottle (Fig. 66, *f*). (See also equivalents, par. **228.**)

The reaction bottle is a wide-mouthed bottle with a wide cylindrical tube inside, sealed to the bottom. To avoid raising the temperature, it should be handled only by the neck, with the thumb and forefinger.

369. Estimation of CO_2 in a carbonate. Weigh 0·3 gram of Iceland spar into the outer portion of the bottle, and place 10 c.cs. of hydrochloric acid (sp. gr. 1·125) in the inner portion. Connect the bottle to the graduated tube, equalise the levels, then turn the tap to connect the tube with the cup, *i.e.* to the atmosphere, and fill the tube with liquid by raising the pressure tube. On turning the tap again to put the tube in communication with the bottle, no air should enter the graduated tube, as the gas in the bottle was already brought to the atmospheric pressure.

Now tilt the bottle to mix the acid and the carbonate, and the gas evolved will pass into *a*. The pressure tube should be lowered during the evolution of the gas, so as to reduce the pressure. When the reaction is over, adjust the levels, and read the volume. Water may be used in the apparatus without much loss, but a correction should be made for the volume of CO_2 dissolved by the acid. According to Scheibler, 10 c.cs. of acid (sp. gr. 1·125) absorb 8·2 c.cs. of CO_2 at 16° C.

370. Estimation of hydrogen peroxide in solution. Place 2 c.cs. of hydrogen peroxide in the inner compartment, and excess of potassium permanganate solution and sulphuric acid in the outer. Shake the bottle vigorously so that all the hydrogen peroxide reacts:

$$2KMnO_4 + 3H_2SO_4 = K_2SO_4 + MnSO_4 + 3H_2O + 5O.$$
$$5O + 5H_2O_2 = 5H_2O + 5O_2.$$

Half the oxygen collected comes from the peroxide, and this, after correction for temperature and pressure, gives the volume of oxygen from 2 c.cs. of the solution. Repeat the experiment in order to confirm the result. The method is very accurate. Compare the titration method, par. **256.**

Standardisation of potassium permanganate solution. By using a known volume of potassium permanganate solution (**249**), acidified with sulphuric acid, and excess of peroxide, the strength of the permanganate may be found. The method is exactly like that in the previous experiment.

371. Valuation of commercial manganese dioxide. Weigh 0·2 grm. of the finely powdered oxide into the outer compartment, and add a few c.cs. of sulphuric acid (1 : 1). In the inner compartment place excess of hydrogen peroxide. The manganese dioxide should dissolve completely on mixing, leaving only a slightly coloured residue of silica and other insoluble matter. As before, half the oxygen evolved comes from the manganese dioxide :

$$MnO_2 + H_2SO_4 + H_2O_2 = MnSO_4 + 2H_2O + O_2.$$

372. Valuation of bleaching powder. Weigh 0·5 grm. into the outer compartment and add a little water. Hydrogen peroxide is placed in the inner compartment, but should not be in large excess :

$$CaOCl_2 + H_2O_2 = CaCl_2 + H_2O + O_2.$$

Since the residual liquid is alkaline, the volume of gas should be read as soon as the rapid reaction is over, say after 5 minutes ; the excess of hydrogen peroxide will decompose slowly, liberating oxygen. This remark applies also to the next experiment.

373. Estimation of $K_3Fe(CN)_6$ in the crystals. Weigh 1·5 grms. into the outer compartment, add to it excess of sodium hydroxide and place excess of peroxide in the inner compartment:

$$\underset{598}{2K_3Fe(CN)_6} + 2KOH + H_2O_2 = 2K_4Fe(CN)_6 + 2H_2O + \underset{32}{O_2}.$$

∴ 598 grams correspond to 22,410 c.cs. of oxygen liberated.

GAS ANALYSIS.

374. The analysis is usually carried out by means of a gas-burette and pipettes.

The Hempel burette (Fig. 67) has an ordinary tap at the top, and at the bottom a three-way tap *d*, so that it may be connected either with the pressure tube or with the atmosphere.

The burette is filled with liquid (generally water saturated with the gas to be tested, or, for more accurate work, with mercury), and connected to the vessel containing the gas to be analysed. By lowering the pressure tube, the gas may be drawn into the burette if suitable provision be made to allow liquid to enter the vessel as the gas is withdrawn. If coal gas is to be examined, the lower tap is turned so as to connect the burette with the atmosphere, the top of the burette is connected to the gas tap, and the gas allowed to sweep out all the air. Having filled the burette it is now connected to the pipette.

The simplest form of Hempel pipette (Fig 72) consists of two bulbs in communication, the lower of which terminates in a bent tube of small bore, *a*. A piece of stout rubber tubing is wired on to the end of this, and closed by a pinch clip.

When the pipette is not in use, it is closed by pieces of rubber tubing fitted with glass rods.

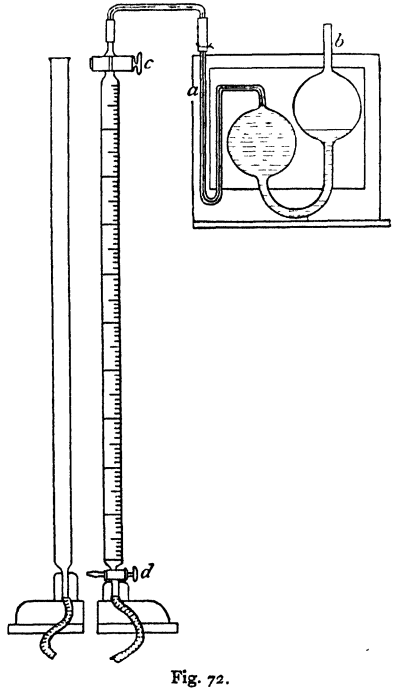

Fig. 72.

The pipette is filled, by means of the tube *b*, with a liquid which absorbs one of the gases to be estimated. The quantity of liquid is such that when it is brought to a mark near the top of the tube *a*, the lower bulb is full and there is a small quantity in the upper bulb. The various gases are absorbed as follows:

Carbon dioxide by Potassium Hydroxide. Dissolve 160 grams of potassium hydroxide in 130 c.cs. of water. This

solution also absorbs all acid-forming gases, as HCl, H_2S, SO_2: the latter may also be absorbed by iodine solution, while **chlorine**, in presence of CO_2, may be removed by potassium iodide or ferrous chloride solution.

Oxygen by Alkaline Pyrogallol. Dissolve 10 grams of pyrogallol in 200 c.cs. of the above potassium hydroxide solution.

Carbon monoxide by Cuprous Chloride Solution. Carbon monoxide may be absorbed by either an acid or an ammoniacal solution, the latter being used when the combustion of hydrogen by palladinised asbestos is subsequently to be carried out.

Acid cuprous chloride solution is prepared by dissolving 27 grams of cuprous chloride (**55** C) in 200 c.cs. of hydrochloric acid, sp. gr. 1·124.

Ammoniacal cuprous chloride solution is prepared by suspending 15 grams of cuprous chloride in 120 c.cs. of water in a 250 c.c. flask and passing ammonia gas into the liquid until all the solid is dissolved.

Acetylene by Ammoniacal Cuprous Chloride.

The olefines by Bromine Water or Fuming Sulphuric Acid.

Nitric oxide by Ferrous Sulphate Solution. Use a cold saturated solution.

Nitrous oxide by means of Alcohol: this, however, is only approximate.

Ammonia by dilute Sulphuric Acid.

Hydrogen is estimated by explosion with excess of air in a special explosion pipette (Fig. 73), or the union of the hydrogen and oxygen may be brought about by palladinised asbestos.

Methane is estimated by explosion with oxygen. The volume of **nitrogen** is obtained by difference.

To carry out an absorption, attach the burette to the pipette, containing the required liquid, by a piece of small bore glass tubing bent twice at right angles (Fig. 72). Remove the clip from the pipette. The liquid will remain at the mark on the tube *a*, if the apparatus is air-tight. Open the tap *c*, and turn the lower tap *d*, to connect the burette with the pressure tube, and by raising the latter transfer the whole of the gas into the pipette. Close the tap *c*, and allow the gas to remain in contact

with the liquid for five minutes, shaking the pipette gently with a circular motion. Then open *c* and *d* and withdraw the gas until the liquid in the pipette reaches the mark on the tube, close *c*, adjust the pressure and read the volume. Again pass the gas into the pipette to see whether the absorption is complete. When there is no further decrease in volume read off the volume of the gas absorbed.

Now attach the second pipette, then the third, and so on until the absorptions are completed.

The order of absorption is important, and will depend upon the composition of the gas-mixture. Sulphur dioxide may be absorbed by iodine solution (decinormal) or a saturated solution of potassium dichromate, and must be determined before the carbon dioxide. If ethylene is absorbed by bromine water, the gas should next be passed into the potassium hydroxide pipette to free it from bromine vapour.

After the simple absorptions of CO_2, O_2, etc., hydrogen, methane and other saturated hydrocarbons and nitrogen remain. This residual gas is mixed with excess of air in the burette and the volume read. It is then passed into a pipette containing water only, through a glass tube of fine bore containing a fibre of palladinised asbestos. This tube is heated gently during the passage of the gas. The hydrogen unites with oxygen, but the methane is not affected :

$$\underset{\text{2 vols.}}{2H_2} + \underset{\text{1 vol.}}{O_2} = 2H_2O.$$

The gas is brought back into the burette, and when there is no further decrease in volume, two-thirds of the decrease gives the volume of the hydrogen.

The gas now contains methane, nitrogen and a known volume of oxygen and nitrogen from the air added. An excess of oxygen is now added, and the gas is passed into an explosion pipette filled with mercury (Fig. 68), and exploded by sparking. To prevent loss of gas during firing, the rubber tube should be wired on to *a* and closed by a screw clip.

$$\underset{\text{1 vol.}}{CH_4} + \underset{\text{2 vols.}}{2O_2} = \underset{\text{1 vol.}}{CO_2} + 2H_2O.$$

The decrease in volume is twice the volume of the methane,

which is equal to the volume of carbon dioxide produced. The carbon dioxide may be measured by absorption in the potassium hydroxide pipette.

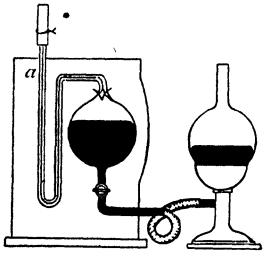

Fig. 73.—Explosion pipette.

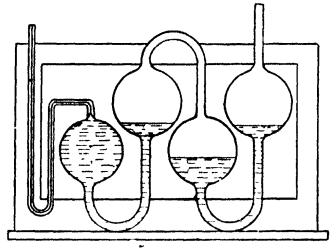

Fig 74.—Double pipette.

The hydrogen and the methane in the mixture may also be determined conjointly by the explosion pipette, by noting the decrease in volume, and measuring the volume of carbon dioxide produced. Let the volume of the methane be x. This is equal to that of the carbon dioxide produced. $2x$ will be the volume of oxygen lost by the burning of the methane. The only other loss is that caused by the union of free hydrogen with oxygen, which is therefore equal to the decrease in volume $- 2x$; two-thirds of this volume gives the hydrogen.

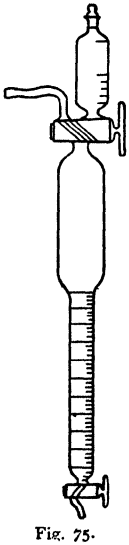

Fig. 75.

Certain liquids used for absorption should be kept as much as possible from the air, *e.g.* pyrogallol, or ammoniacal cuprous chloride; and for these a double pipette (Fig. 74) is used. The additional bulbs act as a water seal and prevent contact of air with the reagent. An inert gas fills that portion of the pipette between the reagent and the water.

375. Bunte's gas burette affords a simple method of carrying out absorptions in the burette itself (Fig. 75). It resembles the nitrometer (**367**), with which it may be interchanged, but it has a tap also at the bottom. The gas to be analysed is passed into

the burette, and the absorbent liquid introduced from the cup, which has marks for 20-25 c.cs. When the absorption is complete, the volume is read, the liquid drawn off at the bottom, and after rinsing the burette with a little water, the next absorbent is introduced.

For practice in the use of the Hempel and Bunte burettes, the following gas-mixtures may be analysed: the air in the laboratory, air from the lungs, coal gas, flue gas, H_2S in the laboratory supply, the gas from oxalic acid, etc.

APPENDIX.

375. International Atomic Weights, and other Constants.

Element.	Symbol.	Atomic Weight. O = 16.	Specific Gravity.	Specific Heat.	Melting Point °C.	Boiling Point °C.
Aluminium	Al	26·97	2·6	0·218	656·4	1800
Antimony	Sb	120·2	6·8	0·0516	630·5	1440
Argon	A	39·88	1·385*	—	− 188	− 186·1
Arsenic	As	71·96	5·73	0·083	500	—
Barium	Ba	137·4	3·78	0·05	850	ca 1150
Bismuth	Bi	209·0	9·75	0·0308	269	1420
Boron	B	10·82	2·45	0·24	ca 2300	—
Bromine	Br	79·92	3·2	0·0843	− 7·3	63
Cadmium	Cd	112·40	8·6	0·0567	321	778
Cæsium	Cs	132·81	1·88	—	26·4	670
Calcium	Ca	40·07	1·59	0·170	780	—
Carbon	C	12·00	3·52	0·1469	—	—
Cerium	Ce	140·2	6·8	0·0448	623	—
Chlorine	Cl	35·46	2·491*	—	− 102	− 33·6
Chromium	Cr	52·01	6·92	0·1216	ca 1489	2200
Cobalt	Co	58·97	8·8	0·1067	1490	—
Columbium	Cb	93·5	12·7	0·071	ca 1950	—
Copper	Cu	63·57	8·95	0·093	1082	—
Dysprosium	Dy	162·5	—	—	—	—
Emanation		222	—	—	—	—
Erbium	Er	167·4	—	—	—	—
Europium	Eu	152·0	—	—	—	—
Fluorine	F	19·0	1·31*	—	−223	− 187
Gadolinium	Gd	157·3	—	—	—	—
Gallium	Ga	69·72	5·9	0·080	30·1	—
Germanium	Ge	72·6	5·47	0·0737	900	—
Glucinum	Gl	9·1	1·93	0·4246	(900)	—
Gold	Au	197·2	19·3	0·0324	1061·7	—
Hafnium		178·3	—	—	—	—
Helium	He	4·0	0·1376*	—	infr. − 270	− 268·6
Hydrogen	H	1·008	0·0695*	ca 6	− 259	− 252·7
Indium	In	114·8	7·12	0·0569	155	ca 1000
Iodine	I	126·92	4·95	0·0541	113	184·4
Iridium	Ir	193·1	22·4	0·0326	2000	—
Iron	Fe	55·84	7·84	0·110	ca 1575	2450
Krypton	Kr	82·9	2·8215*	—	− 169	− 151·7
Lanthanum	La	138·9	6·154	0·045	810	—
Lead	Pb	207·20	11·36	0·0315	326	1525

* Specific gravity of gas, air = 1.

Element.	Symbol.	Atomic Weight. O=16.	Specific Gravity.	Specific Heat.	Melting Point. °C.	Boiling Point. °C.
Lithium -	Li	6·94	0·59	0·9408	186	1400
Lutecium -	Lu	174	—	—	—	—
Magnesium -	Mg	24·32	1·75	0·245	632·7	1120
Manganese -	Mn	54·93	ca 8	0·1217	1245	1900
Mercury -	Hg	200·6	13·60	0·0333	−39	357
Molybdenum -	Mo	96·0	9·01	0·0722	—	—
Neodymium -	Nd	144·3	6·96	—	840	—
Neon - -	Ne	20·2	0·6915*	—	—	ca −238
Nickel - -	Ni	58·68	8·85	0·108	1452	—
Nitrogen -	N	14·01	0·9672*	—	−210·5	−195·5
Osmium -	Os	190·9	22·48	0·0311	2200	—
Oxygen - -	O	16·00	1·105*	—	−235	−182·5
Palladium -	Pd	106·7	11·7	0·0592	ca 1541	—
Phosphorus -	P	31·0	1·83	0·202	44·3	290
Platinum -	Pt	195·2	21·42	0·0325	ca 1750	ca 2450
Potassium -	K	39·10	0·875	0·1655	62·5	757·5
Praseodymium	Pr	140·9	6·48	—	940	—
Radium - -	Ra	226·0	—	—	—	—
Rhodium -	Rh	102·9	12·1	0·058	1907	ca 2500
Rubidium -	Rb	85·5	1·52	—	38·5	696
Ruthenium -	Ru	101·7	12·06	0·0611	ca 1900	ca 2520
Samarium -	Sa	150·4	ca 7·7	—	1350	—
Scandium -	Sc	45·1	—	—	—	—
Selenium -	Se	79·2	4·26	0·084	217	690
Silicon - -	Si	28·06	2·49	0·181	(1200)	(3500)
Silver - -	Ag	107·88	10·5	0·056	960·5	1955
Sodium - -	Na	23·00	0·97	0·2934	95·6	877·5
Strontium -	Sr	87·6	2·5	(0·08)	900	—
Sulphur - -	S	32·07	2·06	0·174	114·5	444·5
Tantalum -	Ta	181·5	16·64	(0·033)	2910	—
Tellurium -	Te	127·5	6·27	0·0474	450	1390
Terbium -	Tb	159·2	—	—	—	—
Thallium -	Tl	204·4	11·8	0·0336	301	ca 1280
Thorium -	Th	232·1	11·0	0·0276	1690	—
Thulium -	Tm	169·4	—	—	—	—
Tin - -	Sn	118·7	7·29	0·055	232	2270
Titanium -	Ti	48·1	4·87	0·1125	(2500)	—
Tungsten -	W	184·0	17·6	0·0340	ca 2800	(3700)
Uranium -	U	238·2	18·7	0·0276	800	—
Vanadium -	V	51·0	5·5	—	1620	—
Xenon - -	Xe	130·2	4·413*	—	−140	−109·1
Ytterbium -	Yb	173·5	(6·9)	—	—	—
Yttrium - -	Y	89	—	—	—	—
Zinc - -	Zn	65·37	7·1	0·093	419	918
Zirconium -	Zr	91·2	4·1	0·0660	(1500)	—

* Specific gravity of gas, air=1.

376. Table of Solubilities.

1 = Soluble in water.

2 = Sparingly soluble in water; soluble in dilute acids.

	K	Na	Li	NH_4	Mg	Ca	Sr	Ba	Fe ous	Fe ic	Cr	Al	Zn
Cl	1	1	1	1	1	1	1	1	1	1	1	1	1
Br	1	1	1	1	1	1	1	1	1	1	1	1	1
I	1	1	1	1	1	1	1	1	1	1	1	1	1
Fl	1	1	1	1	4	4	4	4	2	1	1	1	2
Cl_2O	All hypochlorites are soluble in water.												
Cl_2O_5	All chlorates are soluble in water.												
CN	1	1	1	1	1	1	1	2	4	–	3	–	3
Cfo[4]	1	1	1	1	1	1	1	2	4	4	–	–	4
Cfi[4]	1	1	1	1	1	1	–	–	4	1	–	–	4
O	1	1	1	1	3	2	2	1	3	3	3	3	3
S	1	1	1	1	1	1	1	1	3	3	3	3	3
SO_2	1	1	1	1	1	All other sulphites							
SO_3	1	1	1	1	1	4	4	5	1	1	1	1	1
S_2O_3	1	1	1	1	1	1	1	2	1	1	1	1	1
CO_2	1	1	2	1	3	3	3	2	All other carbonates				
SiO_2	1	1	1	–	All other silicates solubility 3.								
N_2O_3	All nitrites soluble in water.												
N_2O_5	All nitrates soluble in water.												
P_2O_5	1	1	2	1	All other phosphates soluble in								
As_2O_3	1	1	1	1	All other arsenites soluble in								
As_2O_5	1	1	1	1	All other arsenates soluble in								
B_2O_3	1	1	1	1	All other borates soluble in								
CrO_3	1	1	1	1	1	2	2	3	–	1	3	–	1
Mn_2O_7	All other permanganates are soluble in water.												
$(C_2H_3O_2)$[5]	All acetates soluble in water.												
(C_2O_4)	1	1	1	1	All other oxalates solubility 2.								
$(C_4H_4O_6)$	1	1	1	1	2	2	2	2	1	1	1	1	2

[1] Readily soluble in hot water.

[2] Decomposed by water into basic compounds of solubility 3.

[3] Soluble only in aqua regia.

3 = Insoluble in water; soluble in acids.
4 = Insoluble in water; difficultly soluble in acids.
5 = Insoluble in water or acids.

Mn	Ni	Co	Sb	Sn ous	Sn ic	Pb	Hg ous	Hg ic	Ag	Bi	Cu	Cd	
1	1	1	1[2]	1	1	1[1]	4	1	5	1[2]	1	1	Cl
1	1	1	1[2]	–	–	1[1]	3	1	5	2	1	1	Br
1	1	1	2	1	1	1[1]	2	2	5	3	1	1	I
3	2	2	1	1	1	3	–	2	1	1	3	2	Fl
													Cl_2O
													Cl_2O_5
3	4	4	–	–	–	3	–	1	5	–	4	3	CN
3	5	5	–	–	5	3	–	–	5	–	5	–	Cfo[4]
3	5	5	–	–	–	2	–	–	5	–	–	–	Cfi[4]
3	3	3	3	3	4	3	3	3	3	3	3	3	O
3	3[3]	3[3]	3	3	3	3	–	3[3]	3	3	3	3	S
soluble in acids.													SO_2
1	1	1	3	1	–	4	2	1	2	1	1	1	SO_3
1	1	1	1	1	1	2	1	1	2	1	1	1	S_2O_3
soiubility 3.													CO_2
													SiO_2
													N_2O_3
													N_2O_5
acids.													P_2O_5
acids.													As_2O_3
acids.													As_2O_5
acids.													B_2O_3
1	3	3	–	–	–	4	3	2	3	3	1	1	CrO_3
									2				Mn_2O_7
													$(C_2H_3O_2)$[5]
													(C_2O_4)
2	1	1	1	1	1	2	2	2	2	1	2	2	$(C_4H_4O_6)$

[4] Hydroferro- and hydroferricyanic acids.
[5] Fe, Al, Pb, Cu also form basic acetates, solubility 2.

377. Table of Solubilities.

The data in this table are taken chiefly from Comey's *Dictionary of Chemical Solubilities.*

Substance.	100 parts water dissolve at			
	0°	20°	50°	100°
Aluminium Sulphate, $Al_2(SO_4)_3 . 18H_2O$	86 85	107·35	201·4	1132
,, ,, Anhydrous *	31·3	36·15	52·13	89·11
Potash Alum, $KAl(SO_4)_2 . 12H_2O$	3·9	15·13	44·11	357·5
Ammonium Alum, $(NH_4)Al(SO_4)_2 . 12H_2O$	5·22	13 66	36·5	421·9
Antimonyl Potass. Tartrate, $K(SbO)C_4H_4O_6$	5·26 (8·7°)	7·94 (21°)	18·18	35·71
Ammonium Chloride, NH_4Cl	28·4	37·28	50·60	72·80
,, Sulphate, $(NH_4)_2SO_4$	70·6	75·4	84·4	103·3
,, Nitrate, NH_4NO_3	—	199·2 (18°)	—	—
Barium Chloride, $BaCl_2$	30·9	35 7	43·6	58·8
,, Hydroxide, $Ba(OH)_2$	1·5	3·48	11·75	90·77 (80°)
Borax, $Na_2B_4O_7 . 10H_2O$	2 83	7 88	27·41	201·43
Bromine,	3 60 (5°)	3·327 (10°)	3·208 (20°)	3·126 (30°)
Calcium Chloride, $CaCl_2$	49 6	74	120	155
,, Sulphate, $CaSO_4$	0 205	0·241	0·251	0·217
,, Hydroxide, $Ca(OH)_2$	0·131	0 126	0 098	0·060
Chlorine, c.c. in 1 c.c. water	2 5825 (10°)	2·1565	1·3655 (40°)	—
Chrome Alum, $KCr(SO_4)_2 . 12H_2O$	soluble in	6–7 parts	cold water	
Cupric Sulphate, $CuSO_4 . 5H_2O$	31·61	42·31	65·83	203 32
Ferrous Sulphate, $FeSO_4$	7·9	24·7	51·9	42 6
,, Ammon. Sulphate, $Fe(NH_4)_2(SO_4)_2$	12·2	21·6	38·2	56·7 (75°)
Ferric Alum, $KFe(SO_4)_2 . 12H_2O$	—	33·3 (15°)	—	—
Lead Nitrate, $Pb(NO_3)_2$	36·5	52·3	78·7	127
,, Chloride, $PbCl_2$	0·8	1·18	2·0	3·1 (80°)
,, Acetate, $Pb(C_2H_3O_2)_2$	—	48	—	70
Magnesium Sulphate, $MgSO_4$	26·9	36·2	50 3	73·8
,, Chloride, $MgCl_2$	52·2	200 (15·5)	—	—
Manganous Sulphate, $MnSO_4$	55·4	66·3	74 8	52·9
Mercuric Chloride, $HgCl_2$	5·73	7·39	11·34	53·96

* Where no water of crystallisation is mentioned, the solubility is that of the anhydrous salt.

TABLE OF SOLUBILITIES—*Continued.*

Substance.	100 parts water dissolve at			
	0°	20°	50°	100°
Nickel Sulphate, $NiSO_4$	29 3	39 0	54 5	83 7
,, Ammonium Sulphate, $Ni(NH_4)_2(SO_4)_2$	1 8 (3·5°)	5·9	14·4	28·6 (85°)
Potassium Chloride, KCl	28·5	34 7	42 8	56·6
,, Bromide, KBr	53·48	64·52	80·0	102·0
,, Iodide, KI	127·9	144·2	168	209
,, Nitrate, KNO_3	13·3	31·2	86·0	247
,, Sulphate, K_2SO_4	8·5	10·9	15·8	126·2
,, Carbonate, K_2CO_3	83·12	94·06	112 90	153·66
,, Chlorate, $KClO_3$	3·33	7	19	60
,, Perchlorate, $KClO_4$	0 70	—	6·45	19·90
,, Bromate, $KBrO_3$	3·11	6·92	22·76 (60°)	49·75
,, Chromate, K_2CrO_4	58·9	62·94	69 0	79·10
,, Dichromate, $K_2Cr_2O_7$	4·6	12·4	35·0	94·1
,, Permanganate, $KMnO_4$	—	6·25 (15°)	—	—
Silver Nitrate, $AgNO_3$	122	228	500 (54°)	940
Sodium Chloride, NaCl	35·52	35 6	37·0	39 61
,, Nitrate, $NaNO_3$	72 9	87·5	112	180
,, Sulphate, Na_2SO_4	4·8	19·5	46·7	42·5
,, Carbonate, $Na_2CO_3 . 10H_2O$	21·3	92·8	1142 (38°)	540
,, Bicarbonate, $NaHCO_3$	6·9	9·6	14·45	16·7 (70°)
,, Phosphate, Na_2HPO_4	2·5	9·3	82·5	98·8
,, Sulphite, Na_2SO_3	14·1	25·8	49·5 (40°)	—
,, Thiosulphate, $Na_2S_2O_3$	47·6	69·5	140·0	192 (60°)
Strontium Chloride, $SrCl_2$	44·2	53·9	74·4	101·9
,, Hydroxide, $Sr(OH)_2$	0·35	0·68	2·13	18·60
Stannous Chloride, $SnCl_2$	83·9	269·8 (15°)	—	—
Sulphur Dioxide, c.c. in 1 c.c. water	79·789	39·374	18·77 (40°)	—
Sulphuretted Hydrogen, ,,	4·37	2·91	1·857 (40°)	—
Zinc Sulphate, $ZnSO_4 . 7H_2O$	115·22	161·5	263·84	653·6

378. Sulphuric Acid.

Specific Gravity and Concentration of its Solutions.
(Lunge and Isler.) Temperature 15/4.

Specific Gravity.	Per Cent.	Specific Gravity.	Per Cent.	Specific Gravity.	Per Cent.	Specific Gravity.	Per Cent
1 005	0·83	1·240	32·28	1 480	57·83	1·720	78·92
1·020	3·03	1·260	34·57	1 500	59 70	1·740	80·68
1·040	5 96	1·280	36·87	1·520	61·59	1·760	82·44
1·060	8·77	1 300	39·19	1 540	63·43	1·780	84·50
1 080	11·60	1·320	41·50	1·560	65·08	1 800	86 90
1·100	14·35	1·340	43·74	1·580	66 71	1 820	90·05
1·120	17·01	1·360	45 88	1·600	68 51	1·827	91·50
1·140	19 61	1·380	48·00	1·620	70 32	1 834	93·05
1·160	21·19	1·400	50 11	1 640	71 99	1·839	95·00
1·180	24 76	1·420	52·15	1·660	73 64	1·8415	97·00
1·200	27·32	1·440	54·07	1·680	75 42	1·8400	98·70
1·220	29·84	1·460	55·97	1 700	77·17	1·8385	99·95

379. Hydrochloric Acid.

Concentration and Specific Gravity of its Solutions.
(Kolb, recalculated by Gerlach). Temperature 15/0.

% HCl.	Specific Gravity.	% HCl.	Specific Gravity.	% HCl.	Specific Gravity.	% HCl.	Specific Gravity.
0	0·9992	11	1·05529	22	1·11058	33	1·16587
1	1·00503	12	1·06031	23	1·11560	34	1·17089
2	1·01005	13	1·06534	24	1·12063	35	1 17592
3	1·01508	14	1·07037	25	1·12566	36	1·18095
4	1·02010	15	1·07539	26	1·13068	37	1·18597
5	1·02513	16	1·08042	27	1·13571	38	1·191
6	1·03016	17	1·08545	28	1·14074	39	1·196
7	1·03518	18	1·09047	29	1·14516	40	1·200
8	1·04021	19	1·09550	30	1·15079	41	1·204
9	1·04524	20	1·10052	31	1·15581	42	1·208
10	1·05026	21	1·10555	32	1·16084	43	1·212

380. Nitric Acid.

Specific Gravity and Concentration of its Solutions.
(Lunge and Rey.) Temperature 15/4.

Specific Gravity.	% HNO_3.	Specific Gravity.	% HNO_3.	Specific Gravity.	% HNO_3.	Specific Gravity.	% HNO_3.
1·000	0·10	1·165	27·12	1·330	52·37	1·475	84·45
1·015	2·80	1·185	30·13	1·345	54·93	1·485	87·70
1·030	5·50	1·205	33·09	1·360	57·57	1·500	94·09
1·045	8·13	1·215	34·55	1·375	60·30	1·504	96·00
1·060	10·68	1·225	36·03	1·390	63·23	1·506	96·76
1·075	13·15	1·245	39·05	1·400	65·30	1·508	97·50
1·090	15·53	1·260	41·34	1·410	67·50	1·510	98·10
1·105	17·89	1·280	44·41	1·420	69·80	1·512	98·53
1·125	21·00	1·290	45·95	1·430	72·17	1·515	99·07
1·140	23·31	1·305	48·26	1·445	75·98	1·517	99·34
1·150	24·84	1·320	50·71	1·460	79·98	1·520	99·67

381. Ammonia.

Specific Gravity and Concentration of its Solutions.
(Lunge and Wiernik) Temperature 15°.

Specific Gravity.	% NH_3.	Specific Gravity.	% NH_3.	Specific Gravity.	% NH_3.	Specific Gravity.	% NH_3.
1·000	0·00	0·970	7·31	0·940	15·63	0·910	24·99
0·998	0·45	0·968	7·82	0·938	16·22	0·908	25·65
0·996	0·91	0·966	8·33	0·936	16·82	0·906	26·31
0·994	1·37	0·964	8·84	0·934	17·42	0·904	26·98
0·992	1·84	0·962	9·35	0·932	18·03	0·902	27·65
0·990	2·31	0·960	9·91	0·930	18·64	0·900	28·33
0·988	2·80	0·958	10·47	0·928	19·25	0·898	29·01
0·986	3·30	0·956	11·03	0·926	19·87	0·896	29·69
0·984	3·80	0·954	11·60	0·924	20·49	0·894	30·37
0·982	4·30	0·952	12·17	0·922	21·12	0·892	31·05
0·980	4·80	0·950	12·74	0·920	21·75	0·890	31·75
0·978	5·30	0·948	13·31	0·918	22·39	0·888	32·50
0·976	5·80	0·946	13·88	0·916	23·03	0·886	33·25
0·974	6·30	0·944	14·46	0·914	23·68	0·884	34·10
0·972	6·80	0·942	15·04	0·912	24·33	0·882	34·95

382. Tension of Water Vapour.

(Regnault.)

Temp. C.	Tension mm.	Temp. C.	Tension mm.	Temp. C.	Tension mm.	Temp. C.	Tension mm.	Temp. C.	Tension mm.
−2·0	3·9	4·5	6·3	11·0	9·8	17·5	14·9	24·0	22·2
−1·5	4·1	5·0	6·5	11 5	10·1	18·0	15·4	24·5	22·9
−1·0	4·3	5·5	6·8	12·0	10·5	18·5	15·8	25·0	23·6
−0·5	4·4	6·0	7·0	12·5	10·8	19·0	16·3	25·5	24·3
0·0	4·6	6·5	7·2	13·0	11·2	19·5	16·9	26·0	25·0
+0·5	4·8	7·0	7·5	13·5	11·5	20·0	17·4	26·5	25·7
1·0	4·9	7·5	7·7	14·0	11·9	20·5	17·9	27·0	26·5
1·5	5·1	8·0	8·0	14·5	12·3	21·0	18·5	27·5	27·3
2 0	5·3	8·5	8·3	15·0	12·7	21·5	19·1	28·0	28·1
2·5	5·5	9·0	8·6	15·5	13·1	22·0	19·7	28·5	28·9
3·0	5·7	9·5	8·9	16·0	13·5	22·5	20·3	29·0	29·8
3·5	5·9	10·0	9·2	16·5	14·0	23·0	20·9	29·5	30·7
4·0	6·1	10·5	9·5	17·0	14·4	23·5	21·5	30·0	31·5

383. Water.

Density and Volume at different Temperatures.

(Volkmann.)

t	Weight of 1 c.c. water in g.	Volume of 1 g. water in c.c.	*t*	Weight of 1 c.c. water in g.	Volume of 1 g. water in c.c.
0	0·999878	1·000122	14	0·999297	1·000703
1	0·999933	1·000067	15	0·999154	1·000847
2	0·999972	1·000028	16	0·999004	1·000997
3	0·999993	1·000007	17	0·998839	1·001162
4	1·000000	1·000000	18	0·998663	1·001339
5	0·999992	1·000008	19	0·998475	1·001527
6	0·999969	1·000031	20	0·998272	1·001731
7	0·999933	1·000067	21	0·998065	1·001939
8	0·999882	1·000118	22	0·997849	1·002156
9	0·999819	1·000181	23	0·997623	1·002383
10	0·999739	1·000261	24	0·997386	1·002621
11	0·999650	1·000350	25	0·997140	1·002868
12	0·999544	1·000456	30	0·99577	1·00425
13	0·999430	1·000570	35	0·99417	1·00586

384. Alcohol.

Percentage by Volume and Specific Gravity of Aqueous Solutions. (Tralles.) Temp. 15·56° C. Water = 0·9991.

Vol. % Alcohol.	Specific Gravity.	Vol. % Alcohol.	Specific Gravity.	Vol. % Alcohol	Specific Gravity.	Vol. % Alcohol.	Specific Gravity.
1	0·9976	26	0·9689	51	0·9315	76	0·8739
2	0·9961	27	0·9679	52	0·9295	77	0·8712
3	0·9947	28	0·9668	53	0·9275	78	0·8685
4	0·9933	29	0·9657	54	0·9254	79	0·8658
5	0·9919	30	0·9646	55	0·9234	80	0·8631
6	0·9906	31	0·9634	56	0·9213	81	0·8603
7	0·9893	32	0·9622	57	0·9192	82	0·8575
8	0·9881	33	0·9609	58	0·9170	83	0·8547
9	0·9869	34	0·9596	59	0·9148	84	0·8518
10	0·9857	35	0·9583	60	0·9126	85	0·8488
11	0·9845	36	0·9570	61	0·9104	86	0·8458
12	0·9834	37	0·9559	62	0·9082	87	0·8428
13	0·9823	38	0·9541	63	0·9059	88	0·8397
14	0·9812	39	0·9526	64	0·9036	89	0·8365
15	0·9802	40	0·9510	65	0·9013	90	0·8332
16	0·9791	41	0·9494	66	0·8989	91	0·8299
17	0·9781	42	0·9478	67	0·8965	92	0·8265
18	0·9771	43	0·9461	68	0·8941	93	0·8230
19	0·9761	44	0·9444	69	0·8917	94	0·8194
20	0·9751	45	0·9427	70	0·8892	95	0·8157
21	0·9741	46	0·9409	71	0·8867	96	0·8118
22	0·9731	47	0·9391	72	0·8842	97	0·8077
23	0·9720	48	0·9373	73	0·8817	98	0·8034
24	0·9710	49	0·9354	74	0·8791	99	0·7988
25	0·9700	50	0·9335	75	0·8765	100	0·7939

385. Hydrometers.

$$\text{Spec. Grav.} = 1 + \frac{{}^{\circ}\text{Tw.} \times 5}{1000};$$

$${}^{\circ}\text{Twaddell} = \frac{(\text{Spec. Grav.} - 1) \times 1000}{5}.$$

For liquids denser than water,

$$\text{Spec. Grav.} = \frac{144}{144 - {}^{\circ}\text{Bé}}; \quad {}^{\circ}\text{Beaumé} = 144 - \frac{144}{\text{Sp. Gr.}}$$

For liquids less dense than water,

$$\text{Spec. Grav.} = \frac{144}{{}^{\circ}\text{Bé} + 134}; \quad {}^{\circ}\text{Beaumé} = \frac{144}{\text{Sp. Gr.}} - 134$$

INDEX.

The numbers refer to pages.

Acetaldehyde, 84.
— reactions of, 85.
Acetamide, 90.
Acetanilide, 126.
Acetic acid, 87.
— estimation of, 256.
— reactions of, 88.
Acetone, 100.
Acetyl chloride, 89.
Acetoxime, 100
Acetylene, 75.
— estimation of, 340.
— tetrabromide, 75
Acidimetry, 246.
Acids, organic, molecular weights of, 141.
— —detection of, 214.
— —strength of, 186.
Adsorption, 201.
Air compressor, 14.
Alcohol, ethyl, 80.
— —density of solutions of, 353.
— — reactions of, 80.
— — oxidation of, 84.
— methyl, 101.
Aldehyde ammonia, 86.
Alkalies, indirect estimation of, 318.
— in felspar, 321.
Alkalimetry, 246.
Alkaloids, 131, 226.
Alum chrome, 24.
— potash, 24.
Aluminium, estimation of, 299, 316, 317, 322, 325
Aluminium, reactions of, 158.
— chloride, 34.
Aluminium bronze, analysis of, 325.
Aminoacetic acid, 93.
Ammonia, 29.
— absorption of, 340.
Ammonium, estimation of, 258, 309.
— hydroxide, density of solutions of, 351.
— nitrate, 61.
— reactions of, 167.
— sulphides, 65, 66.
Amyl acetate, 95.
Analysis, report on, 218.
Analytical tables, 206.
Aniline, 124.
— — reactions of, 125.
Anode deposits, 333.
Antifebrin, 126.
Antimony, estimation of, 279, 304, 327, 328, 333.
— reactions of, 151.
— trichloride, 64.
Arsenic, estimation of, 303.
— reactions of, 149.
Arsenic acid, 68.
— estimation of, 303.
— reactions of, 150.
Arsenious acid, estimation of, 282.
— reactions of, 150.
— sulphide, colloidal, 199.
Ash of filters, 292.

Aspirators, 13.
Aspirin, 131.
Atomic weights, 344.
Avogadro's hypothesis, 142.

Balance, the, 230.
— theory of, 232.
— sensibility of, 232.
Barium chloride, 41.
Barium dithionate, 54.
— estimation of, 296.
— group, separation of, 166, 195, 212.
— reactions of, 164.
Benzaldehyde, 121.
Benzamide, 127.
Benzene, 120.
— nitro-, 123.
Benzhydrol, 119.
Benzoic acid, 118, 122.
Benzyl alcohol, 121.
Bismuth, estimation of, 306.
— reactions of, 147.
Bleaching powder, analysis of, 278, 338.
Blende, analysis of, 323.
Boiling point, correction of, 136.
— determination of, 136.
Boric acid, reactions of, 179.
Bottles, weighing, 238.
Brass, analysis of, 324.
Britannia metal, analysis of, 326.
Bromine, estimation of, 271, 297.
— in bromine water, 276.
Bronze, analysis of, 324.
Brucine, 133, 226.
Burettes, 239.
— calibration of, 241.
— gas, Hempel, 338.
— — Bunte, 342.

Cadmium, estimation of, 306, 333.
— reactions of, 149.
— sulphide, 66.
— yellow, 66.
Caffeine, 116.
Calcium, estimation of, 265, 300.
— reactions of, 165.
— chloride, 40.
Calibration of apparatus, 241.
Cane sugar, 77.
Carbohydrates, 76, 225.
Carbolic acid, 128.
Carbon dioxide, 29.
— — estimation of, 339.
— monoxide, 30.
— — estimation of, 340.
Carbonic acid, estimation of, 310, 312, 318, 337, 339.
— reactions of, 172.
Chloracetic acid, 92.
Chloral hydrate, 87.
Chloric acid, reactions of, 172.
Chlorine, 28.
— estimation of, 270, 271, 296.
— in bleaching powder, 278.
— in chlorine water, 276.
— in tap water, 271.
Chloroform, 99.
Chromates, reactions of, 157.
Chrome alum, 24.
— yellow, 60.
— red, 60.
Chromic chloride, 35.
Chromium, estimation of, 299, 302.
— hydroxide, 48.
— reactions of, 156.
— sesquioxide, 48.
— trioxide, 59.
Chromyl chloride, preparation of, 42.
Cinchonine, 132, 227.
Citric acid, reactions of, 109.
Cleansing apparatus, 241.
Cobalt, estimation of, 300, 331.
— reactions of, 163.
Colloidal state, the, 197.
Colloids, electrical properties of 200.
— precipitation of, 200.
— preparation of, 199.
Common salt, purification of, 27.
Copper acetate, 89.
— ammonium sulphate, 26.

Copper, estimation of, 272, 276, 292, 294, 314, 331.
— group, separation of, 153, 194, 208.
— oxides, reduction of, 49.
— reactions of, 148.
— sulphate, 57.
— — purification of, 57.
Corks, 2.
Cork-borers, 2.
Cream of Tartar, 107.
Crusher, steel, 4.
Crystals, growth of, 8.
Crystallisation, 7.
— fractional, 7.
Cuprammonium sulphate, 64.
Cupric chloride, 39.
— oxide, reduction of, 48.
Cuprous acetylide, 75.
— chloride, 39.
— oxide, 46.
Cyanides, complex, 227.
Cyanogen acids, detection of, 227.
— derivatives, 109.
Cylinders, measuring, 239.

Density, relative, 138.
— vapour, 140.
Desiccators, 17.
— vacuum, 17.
Dispersoids, 198.
Distillation, 136.
— with steam, 125.
Dolomite, analysis of, 316.
Drying agents, 18, 21.
— apparatus for gases, 20.
— of liquids, 22.
— ovens, 19.

Electro-chemical analysis, 329.
— — separations, 334.
Electrodes, 330.
— rotating, 330.
Elements, atomic weights of, 344.
— detection of, 218.
Equivalents, 242.
Equivalents, determination of, 243, 260
Ethane, 83.
Ether, 97.
Ethereal salts, 94.
Ethyl acetate, 94.
— — hydrolysis of, 96.
— alcohol, 80.
— — reactions of, 80.
— — oxidation of, 84.
— benzoate, 122.
— bromide, 81.
— iodide, 82.
— nitrite, 95.
— potassium sulphate, 72.
— — reactions of, 73.
Ethylene, 73.
— dibromide, 74.
Evaporation, 15.

Fehling's solution, 284.
Felspar, analysis of, 319.
Ferric chloride, 34.
— hydroxide, colloidal, 199.
— iron, estimation of, 264, 298, 318, 319, 320.
— — reactions of, 155.
Ferrous ammonium sulphate, 25.
— chloride, 38.
— iron estimation of, 261, 262, 263.
— — reactions of, 154.
Filter, Gooch, 289.
— suction, 289.
— weighed, 290.
— ash, weight of, 292.
— jacketed, 11.
— pumps, 11.
Filtration, 10, 288.
— accelerated, 11, 289.
Flasks, measuring, 239.
— — calibration of, 241.
Formaldehyde, 101.
— estimation of, 256, 276.
— reactions of, 102.
Formic acid, 103.
— reactions of, 104.
Fractionating columns, 80.

Gas analysis, 338.
— regulator, 5.
— volumeter, 335.
— wash-bottles, 21.
Gases, drying of, 20.
German silver, analysis of, 324, 334.
Glass, analysis of, 320.
Glass cutter, 1.
— tube, to bend, 1.
— vessels, 287.
Glauber's salt, 26.
Glinsky fractionating column, 80.
Glucose, 78, 178.
Glycerol, 96, 97.
— reactions of, 97.
Glycine, 93.
Glycocoll, see Glycine.
Gold, colloidal, 199.
Gooch filter, 289.
Grape sugar, 78.
— reactions of, 79.
Gravimetric analysis, 287.
Grignard's reaction, 116.
— reagent, 117.
Group separations, 193, 206.
Growth of crystals, 8.
Guignet's green, 8.

Haematite, estimation of iron in, 264.
Hardness of water, estimation of, 282.
Hempel gas apparatus, 338, 339.
Hydriodic acid, 44.
— reactions of, 170.
Hydrobromic acid, 42.
— reactions of, 170.
Hydrochloric acid, 29.
— density of solutions of, 350.
— estimation of, 256.
— reactions of, 169.
Hydrocyanic acid, reactions of, 112.
Hydroferricyanic acid, reactions of, 111.
Hydroferrocyanic acid, reactions of, 110.
Hydrofluoric acid, reactions of, 171.
Hydrogen, 28.
— estimation of, 340.
— ion concentration, 186.
— peroxide, reactions of, 180.
— — estimation of, 268, 337.
Hydrolysis, 96.
— of salts, 188.
Hydrometers, tables for, 353.
Hydrosulphuric acid, reactions of, 174.
Hydroxides, metallic, 181.
Hydroxylamine sulphate, 63.
Hypochlorous acid, estimation of, 279.
— reactions of, 171.
Hypophosphorous acid, 178.

Indicators, 251.
— sensitiveness of, 253.
Insoluble matter, estimation of, 317.
— examination of, 217.
Instructions to students, 23, 143.
Iodic acid, 45.
Iodine, estimation of, 271, 297.
— standard solution of, 274.
Iodobenzene, 118.
Iodoform, 99.
Ionisation, 182.
— degree of, 185.
Ions, nature of, 185.
— systematic detection of, 193.
Iron, estimation of, 262, 263, 264, 268, 298, 315, 316, 318, 319, 320, 332.
— group, separation of, 159, 194, 209, 210.
— reactions of, 154.
Isomorphism, 8.

Lactic acid, 104.
Lactose, 78.
Lead acetate, 89.
— chromate, 60.
— — basic, 60.
— estimation of, 301, 333.

Lead formate, 103.
— nitrate, 62.
— oxides, reduction of, 50.
— peroxide, 49.
— reactions of, 144.
Liquids, drying, 22.
Lithium, reactions of, 167.
Litmus, 254.

Magnesium, equivalent of, 260.
— estimation of, 302, 333.
— hydroxide, 192.
— reactions of, 168, 196.
— sulphate, 57.
Maltose, 78.
Manganese, estimation of, 307, 315.
— reactions of, 160, 195.
— dioxide, estimation of, 266, 277.
— oxides, reduction of, 50.
Manganous oxalate, 46.
— oxide, 46.
Melting point, determination of, 134.
Mercuric oxide, 47.
Mercury, estimation of, 273, 306.
— reactions of, 145, 146.
— purification of, 71.
Metallic hydroxides, 181.
— oxides, 181.
— peroxides, 181.
Metals, detection of, 220.
Methane, 72.
— estimation of, 340.
Method of analysis, a, 202.
Methyl alcohol, reactions of, 101.
— iodide, 83.
— orange, 252, 254.
— red, 253, 254.
Methylamine hydrochloride, 91.
Microcosmic salt, 68.
Milk sugar, 78.
Moisture, estimation of, 318.
Molecular weights, determination of, 141.
Morphine, 132, 226.

Nickel, estimation of, 299, 300, 332.
— coinage, analysis of, 334.
— reactions of, 162.
— potassium sulphate, 26.
— sesquioxide, 47.
Nitrogen, estimation of, 47, 340.
— detection of, 219.
— trioxide, 68.
Nitrometer, the, 335.
Nitric acid, density of solutions of, 351.
— estimation of, 259, 310, 336.
— reactions of, 175.
— oxide, estimation of, 340.
Nitrobenzene, 123.
Nitrophenols, 129.
Nitrous acid, estimation of, 260, 266.
— reactions of, 175.
— oxide, estimation of, 340.
Normal solutions, 246.

Oil of wintergreen, 130.
Olefines, estimation of, 340.
Organic acids, detection of, 223.
— analysis, 218.
Orthonitrophenol, 129.
Oscillations, weighing by, 236.
Osmotic pressure, 142.
Ovens, drying, 19.
Oxalic acid, 105.
— estimation of, 264, 301.
— purification of, 27.
— reactions of, 106.
Oxides, metallic, 181.
— preparation of, 46.
— reduction of, 49.
Oxygen, estimation of, 340.

Paranitrophenol, 129, 254.
Per-acids, 182.
Perborate, sodium, 182.
Percarbonates, 182.
Permanganic acid, reactions of, 161.
Peroxides, metallic, 181, 265.
Per-salts, 182.

Persulphates, 182, 266.
Pewter, analysis of, 326.
Phenacetin, 127.
Phenol, 128.
— nitration of, 128.
— reactions of, 128.
Phenolphthalein, 252, 254.
Phenylacetic acid, 118.
Phenylhydrazine, 127.
Phosphates, analysis of, 210.
Phosphor bronze, analysis of, 326.
Phosphoric acid, 66.
— estimation of, 303.
— reactions of, 176.
Phosphorous acid, 177.
Phosphorus, detection of, 220.
Phosphorus pentachloride, 36.
— trichloride, 36.
Picric acid, 129.
Pipettes, 240.
— calibration of, 241.
— Hempel, 338.
— — double, 342.
— — explosion, 341.
Plates, porous, 18.
Platinum vessels, care of, 292.
Porcelain vessels, 287.
Porous plates, 18.
Potash, caustic, estimation of, 254.
Potassium, estimation of, 308, 318.
— reactions of, 166.
— antimonyl tartrate, 108.
— bromate, 43.
— bromide, 43.
— chlorate, 32.
— chloride, 33.
— chromate, 59.
— colbaltinitrite, 71.
— cyanide, standard solution of, 271.
— dichromate, 58.
— — standard solution of, 264.
— ethyl sulphate, 72.
— — — reactions of, 73.
— ferricyanide, 110.
— — estimation of, 338.
Potassium, ferrocyanide, 109.
— hydrogen tartrate, 107.
— hydroxide, estimation of, 254.
— iodide, 44.
— nitrate, 26.
— perchlorate, 33.
— permanganate, 61.
— — action of, on ferrous salts, 262.
— — standard solution of, 261, 338.
— sodium tartrate, 108.
— thiocyanate, standard solution of, 272.
Precipitates, drying, 290.
— ignition of, 291.
— redissolving, 191.
— washing, 13, 288.
Precipitation, 9, 190, 287.
Precipitation jar, 9.
Preliminary examination for bases, 202.
— for acids, 214.
Preparations, 23.
Preparation of solution for analysis, 205.
Product, solubility, 189.
Pyrites, analysis of, 323.
Pyrolusite, valuation of, 266. 277.

Qualitative analysis, 143.
Quantitative analysis, 229.
Quinine, 131, 227.

Radicals, acid, detection of, 214.
— basic, detection of, 202.
Reactions of acids, 169.
— of bases, 202.
Reduction of metallic oxides, 49.
Rochelle salt, 108.
— analysis of, 318.
Rotation electrodes, 330.
Rubber stoppers, 3.

Salicylic acid, 130.
Salol, 131.

Salting out, 191.
Silica, 65.
— estimation of, 319, 323.
Silicates, analysis of, 319.
Silicic acid, 65, 200.
— reactions of, 180.
Silicon fluoride, 65.
Silver, colloidal, 199.
— estimation of, 272, 297, 333.
— reactions of, 145.
— alloy, analysis of, 314, 334.
— group, separation of, 146, 207.
— nitrate, from residues, 70.
— — standard solution of, 270.
Soap, 96.
— standard solution of, 281.
Soda ash, analysis of, 257.
Sodium, estimation of, 308.
— reactions of, 166.
— arsenate, 69.
— bicarbonate, 51.
— cobaltinitrite, 70.
— carbonate, 51.
— — estimation of, 255.
— — — in soda ash, 257.
— — standard solution of, 247.
Sodium group, separation of, 168, 213.
— hydroxide, 52.
— — standard solution of, 250.
— hydrogen sulphite, 53.
— hypochlorite, 32.
— — estimation of, 279.
— nitrite, 62.
— — estimation of, 266.
— peroxide, estimation of, 268.
Sodium phosphates, 67.
— potassium tartrate, 108.
— sulphate, 26.
— sulphite, 53.
— thiosulphate, 54.
— — standard solution of, 274.
Solder, analysis of, 326, 327.
Solubility, 4, 5.
— curves, 6.
— of organic substances, 222.
— product, 189.
Solubility, tables of, 346, 348,
Solutions, 3.
— standard, 246.
Spathic ore, estimation of iron in, 268.
Specific gravity, determination of, 138.
Standard solutions, 246.
Stannic chloride, 35.
— salts, reactions of, 153.
Stannous chloride, 38.
— salts, reactions of, 152.
Starch, 76.
Steam distillation, 125.
Stoppers, rubber, 3.
Strength of acids, 186.
Strontium, estimation of, 299.
— reactions of, 165.
Strychnine, 133, 226.
Succinic acid, 106.
— — reactions of, 106.
Sugars, estimation of, 283, 285.
Sulphur, detection of, 219.
— estimation of, 313, 324.
— dioxide, 30.
— monochloride, 37.
Sulphuretted hydrogen, 31.
— estimation of, 280.
— reactions of, 174.
— solubility of, 194, 280.
Sulphuric acid, 55.
— density of solutions of, 350.
— estimation of, 294.
— reactions of, 174.
— standard solution of, 248.
Sulphurous acid, estimation of, 280.
— reactions of, 173.
Sulphuryl chloride, 37.

Tables analytical, 206.
Tartar emetic, 108.
Tartaric acid, 107.
— reactions of, 107.
Thermit, 51.
Thermoregulator, 5.
Thermostat, 5.
Thiocyanic acid, reactions of, 113.

Thiosulphate, decinormal, 274.
— standardisation of, 275.
Thiosulphuric acid, reactions of, 174.
Tin, estimation of, 305, 327, 328, 333.
— reactions of, 152.
Turbine, water, 10.
Type metal, analysis of, 326, 327.

Urea, 114.
— reactions of, 115.
Uric acid, reactions of, 115.

Vacuum desiccators, 17.
— distillation, 17.
Vapour density, determination of, 140.
Volume, measurement of, 239.
Volumetric analysis, 242.

Wash-bottle, to fit a, 3.
Wash-bottles, gas, 21.
Water baths, 16.
— of crystallisation, estimation of, 295.
— density of, 352.
— hardness of, 282.
Water in minerals, estimation of, 318.
— turbine, 10.
— vapour tension of, 352.
Weighed filter, 290.
Weighing in vacuo, 237.
— methods of, 236.
Weighing bottles, 238.
Weights, 235.
— testing the, 235.
— atomic, table of, 344.
— molecular, determination of, 141.
White metals, analysis of, 327.
Wintergreen oil, 130.
Wood spirit, 101.

Young fractionating column, 80.

Zinc chloride, 39.
— dust, valuation of, 244, 269.
— equivalent of, 243, 261.
— estimation of, 297, 298, 332.
— group, separation of, 164, 195, 211.
— reactions of, 159.
— sulphate, 58.

PRINTED IN GREAT BRITAIN BY ROBERT MACLEHOSE AND CO. LTD.
THE UNIVERSITY PRESS, GLASGOW.