TEXT FLY WITHIN THE BOOK ONLY

PAGES MISSING WITHIN THE BOOK ONLY

UNIVERSAL
LIBRARY
OU_158513
UNIVERSAL
LIBRARY

LABORATORY MANUAL OF PHYSICAL CHEMISTRY

COPYRIGHT, 1922, 1931, 1935, BY
ALBERT W. DAVISON AND HENRY S. VAN KLOOSTER

COPYRIGHT, 1941, BY
ALBERT W. DAVISON, HENRY S. VAN KLOOSTER, AND WALTER H. BAUI

All Rights Reserved

This book or any part thereof must not be reproduced in any form without the written permission of the publisher.

PRINTED IN U. S. A.

Parallex Binding, Sloves Mechanical Binding Co.

PREFACE TO THIRD EDITION

In presenting this third edition of their Laboratory Manual of Physical Chemistry, the authors have attempted to present a comprehensive set of exercises which will cover the elementary field of modern physical chemistry in a quantitative manner. All of the experiments have been thoroughly tested in the laboratory of the Rensselaer Polytechnic Institute. The majority of them represent the accumulated experience of more than twenty-five years in teaching physical chemistry to undergraduate students of science and engineering.

The scope of the Manual has been enlarged by the introduction of new experiments involving modern techniques and the more recently developed apparatus and equipment. The treatment of theoretical aspects and the discussions have also been revised to conform to present-day viewpoints. In introducing the Brønsted-Lowry concept of acids and bases the authors have not been unmindful of the fact that chemists and chemical engineers, for some time to come, will undoubtedly continue to employ both the Brønsted-Lowry and the Arrhenius-Ostwald systems. They have therefore presented certain experiments from the newer viewpoint and others from the older. For instance, in Experiment 46, electrolytic equilibria have been treated from the standpoint of Brønsted-Lowry and, in Experiment 47, from that of Arrhenius-Ostwald.

THE AUTHORS

TROY, NEW YORK
March, 1941

CONTENTS

		PAGE
	Preface to Third Edition	v
	Introduction	1
EXPERIMENT		
1.	Determination of Vapor Density. Dumas' Method	3
2.	Determination of Vapor Density. Victor Meyer's Method	6
3.	Graham's Effusion Law; Densities of Gases	9
4.	Vapor Pressure of Liquids	12
5.	Surface Tension, Parachor, and Association Factor of Pure Liquids	16
6.	Surface Tension, Drop-Weight Method	20
7.	Viscosity	24
8.	Refractive Index, Density, and Molecular Refractivity of Liquids	28
9.	Dielectric Constant and Dipole Moment	32
0.	Transition Points in the Solid State	38
1.	Solubility. The van't Hoff Isochore	48
2.	Lowering of the Freezing Point. Beckmann's Method	51
3.	Lowering of the Freezing Point. Vacuum-Flask Method	56
4.	Elevation of the Boiling Point. The Cottrell Apparatus	60
5.	Elevation of the Boiling Point. The Eykman Method	64
6.	Vapor Pressure Lowering by a Dissolved Substance. Raoult's Law	68
7.	Distillation with Steam	71
18.	Distribution of a Substance between Two Nonmiscible Liquids	75
19.	Boiling Points of Binary Systems (Minimum Boiling Liquids)	78
20.	Boiling Points of Binary Systems. Siwoloboff's Method	82
21.	Boiling Point-Vapor Composition Curves	85
22.	Partially Miscible Liquids. Determination of Mutual Solubility	90
23.	Solubility Curve for a Ternary System of Liquids	94
24.	Phase Diagram for a Two-Component System of Metals	99
25.	First Order Reaction: Decomposition of Hydrogen Peroxide	104
26.	First Order Reaction: Inversion of Cane Sugar	108
27.	Second Order Reaction: Sodium Thiosulfate and Ethyl Bromacetate	112
28.	Second Order Reaction: Saponification of Ethyl Acetate; Conductivity Method	116
29.	Heat of Neutralization	120
30.	Heat of Combustion	125
31.	Heat of Solution	132
32.	Heat of Vaporization. Trouton's Law	137
33.	Surface Films; Film Pressure Balance	140

EXPERIMENT PAGE

34. Adsorption from Solution 145
35. Flocculation of Suspensoids by Electrolytes 150
36. Solubility Product 154
37. Conductivity and Conductance Ratio 157
38. Hydrolysis. Conductivity Method 162
39. Transport Numbers 165
40. Transference Numbers. Moving Boundary Method 169
41. Electromotive Force 173
42. Electromotive Force; Concentration Cells 180
43. Electrometric Analysis: Potentiometric Titration 184
44. Electrometric Analysis: Conductometric Titration 192
45. Electrometric Analysis: Dropping Mercury Electrode 197
46. Electrolytic Equilibria, Quinhydrone and Glass Electrodes 204
47. Indicators, Buffer Solutions, Colorimetric Determination of *p*H 212

Appendix (Tables 1–24) 217

INTRODUCTION

Physical Chemistry Laboratory

Before undertaking the study of a new subject, whether in the classroom or in the laboratory, it is always wise for the student to acquaint himself with the general characteristics of the course and to endeavor to ascertain what benefits he can hope to acquire from it. Physical chemistry, probably more than any other division of the science, offers innumerable opportunities for the thoughtful student to secure intimate, firsthand knowledge concerning at least four different aspects of chemistry:

1. The student is enabled to verify (or disprove) many of the fundamental laws of chemistry from his own observations. Frequently this opportunity comes to him for the first time in the physical chemistry laboratory. In this phase of his training, he is being gradually led away from the "accept it because it is so written" attitude of the classroom to the pioneering attitude of the investigator.

2. The performance of a carefully selected list of physicochemical experiments should enable him to acquire a valuable understanding of the scope, possibilities, and limitations of physical chemistry and should stimulate his imagination in the applications of these methods to research activities and to the solution of problems of industry.

3. In the physical chemistry laboratory, opportunities are afforded for the acquisition of skills and techniques in planning and setting up scientific apparatus and in securing scientific data which are not found in many other laboratory procedures.

4. Since so many of the measurements carried out in physical chemistry are physical rather than chemical in nature, here is afforded a suitable opportunity for the development of an appreciation of sources of error, their causes, their minimization, and their elimination.

Sources and Treatment of Errors

As the student progresses in acquiring technical knowledge and skill, he should develop an ever increasing sense of the sources and magnitudes of errors incidental to his work, he should be ever alert to every possibility for eliminating them, and he should acquire experience and judgment in their treatment. In physicochemical measurements, three main sources of error are recognized: those arising from inherent characteristics in the method itself, those due to inadequacies of the instruments employed, and those due to lack of skill and to the limitations of the observer.

1. Errors Inherent in the Method. The experiments which are usually included in a course in elementary physical chemistry fall into two general types: on the one hand, there are those for the determination of orders of magnitude, and, on the other, those for securing precise scientific data. Order-of-magnitude experiments, frequently employing what might be termed "shotgun" methods, comprise such experiments as molecular weight determinations by vapor density, boiling-point elevation, and freezing-point lowering, and those for the determination of reaction rates. In general, the equations which are available for these types of experiments have been developed for ideal substances and conditions rather than for individual cases, and hence are not intended to produce results of the highest precision.

Even those experiments which fall within the classification of more precise determinations are invariably subject to errors of this type, but here the relative error may be reduced to a comparatively small value.

2. Errors Due to Inadequacies in Measuring Instruments. The student should begin, early in his career, to cultivate an appreciation of the fact that scientific instruments are, at best, faulty and subject to constant errors, both determinate and indeterminate. In the majority of cases, such errors arise through faulty design or through inadequate calibration. If the fault is one of design or workmanship, there is very little that can be done to improve the situation except to substitute more suitable apparatus for the equipment at hand; but if the fault is due to inadequacy of calibration, the error may be reduced to a small known minimum.

3. Errors Due to the Limitations of the Observer. Extreme precision and accuracy are never expected from the student who is just beginning the study of science, because of his lack of skill and judgment. As he progresses in his study it is expected that such errors as arise from carelessness, accidental errors of measurement, mistakes, and faulty techniques will gradually be eliminated. At the same time, it is to be expected that his sense of appreciation and of recognition of errors will develop. Accurate results can be attained only through practice and by the development of careful habits.

The Theory of Errors

Accuracy of observation may be improved by taking into account all possible sources of error and by treating multiple observations by the theory of errors. It is the opinion of the authors that a laboratory manual of this type is not the place to discuss in detail such subjects as the calibration of measuring instruments, significant figures, the law of occurrence of accidental errors, the theory of least squares, and similar mathematical relationships, since these subjects are adequately covered elsewhere.[1]

[1] Kolthoff and Sandell, Quantitative Inorganic Analysis, Chapter XV.
Sherwood and Reed, Applied Mathematics in Chemical Engineering, Chapter IX.
Eschbach, Handbook of Engineering Fundamentals, 2–123.
Tuttle and Satterly, Theory of Measurement.
Whitehead, Design and Use of Instruments and Accurate Mechanism.
Stevens, Theory of Measurements.

EXPERIMENT 1

DETERMINATION OF VAPOR DENSITY. DUMAS' METHOD

Object

To determine the vapor density and the molecular weight of an assigned liquid in the vapor state.

Discussion

In this method, the vapor density is determined by direct weighing. A glass bulb of approximately 250-ml. capacity is accurately weighed when filled with air, when filled with the vapor to be investigated, and when filled with water. By noting the temperatures and pressures at which the bulb was filled with these respective substances, it is possible to calculate (a) the volume of the bulb, (b) the weight of air contained by the bulb when first weighed, (c) the weight of the "empty" bulb, and (d) the density of the vapor.

For determinations of the highest accuracy, all weights should be reduced to "in vacuo." For ordinary work, however, this refinement is quite unnecessary.

Apparatus and Chemicals Required

Dumas' vapor density apparatus, 2 Bunsen burners, barometer, thermometer (0–110° C.),[1] 500-ml. beaker, file, crucible tongs.

Volatile liquids, such as absolute alcohol, ether, carbon disulfide, carbon tetrachloride, for investigation.

Method of Procedure

Thoroughly clean and dry the Dumas bulb, and draw the tip out to a fine capillary. Weigh the bulb accurately, noting the temperature of the balance case and the barometric pressure. Record the values as W_1, t_1 and p_1.

Place about 10 ml. of the liquid assigned for the investigation in the bulb. This is most readily done by warming the bulb slightly, and immersing the tip beneath the surface of the liquid. As the bulb cools, liquid will be drawn up into it.

Now clamp the bulb in the vaporizing bath in such a manner that only the tip projects above the surface. For liquids boiling below 90°, boiling water is satisfactory for the bath. For liquids boiling above 90°, oil may be used. In the latter case, it is essential that the temperature of the oil be held at least 10° above the boiling point of the liquid being investigated.

When the liquid within the bulb has completely vaporized, seal off the tip; record the temperature of the bath and the barometric pressure as t_2 and p_2.

Allow the bulb to cool, clean and dry it, and weigh. Record as W_2.

Prepare about 500 ml. of gas-free water by boiling distilled water, and cooling it to room temperature. Fill the bulb with this water by breaking off the tip while immersed in the water. The bulb should fill completely. If it does not, consult the instructor. Record the temperature of the water as t_3.

Dry the outside of the bulb and weigh it, with the tip (filled with water) which was cut off, to the nearest centigram on the large balance. Record as W_3.

Calculations

$W_3 - W_1$ gives the apparent mass (m_1) of water contained in the bulb. This, divided by the density of water at temperature t_3, gives the apparent volume of the bulb (V_b) in ml. The true

[1] Unless otherwise specified, all temperatures mentioned in this manual refer to degrees Centigrade.

mass of water contained in the bulb is greater than the apparent mass, by the weight of the air contained in the bulb when W_1 was taken. One liter of air (s.c.) weighs 1.293 g.

1. Calculate the weight of 1 ml. of air at t_1 and p_1, and multiply this value by V_b, to obtain the correction which is to be added to m_1 in order to find the true mass of water m. Then m, divided by the density of water at t_3, gives the true volume of the bulb at t_3. Call this V_3.

2. Calculate the exact mass of air contained in the bulb, by multiplying V_3 by the weight of 1 ml. of air at t_1 and p_1. Call this m_a. Then $W_1 - m_a$ gives the mass of the empty bulb, and $W_2 - (W_1 - m_a)$ gives the true mass of the vapor in the bulb mv. Since the bulb was filled at an elevated temperature, the volume V_3 does not represent the true volume of the vapor. V_3 must be increased to $V_3 + V_3(0.000025)(t_2 - t_1)$, where 0.000025 is the cubical coefficient of expansion of glass. Call this new volume V_4.

3. Having found the mass of vapor, its true volume, temperature, and pressure, calculate the vapor density.

4. Compute the molecular weight.

EXPERIMENT 2

DETERMINATION OF VAPOR DENSITY. VICTOR MEYER'S METHOD

Object

To determine vapor density and molecular weight by the Victor Meyer method.[1]

Discussion

A weighed quantity of the liquid under investigation is caused to evaporate in a heated tube, which is fitted with a delivery arm. As vapor is formed, an equivalent volume of air is displaced from the vaporization tube and is collected in an eudiometer.

At the close of the experiment, the volume, temperature, and pressure of the displaced air, and the height of the meniscus above the level of water in the pneumatic trough, are noted. From these data, the volume of the vapor is calculated for standard conditions.

When air has been collected over water, the volume under standard conditions is given by the following equation:

$$V_s = V \times \frac{273}{273 + t} \times \frac{p - h/13.6 - w}{760}$$

where V is the observed volume,
t the temperature of the water, which should be the same as that of the room,
h the height of the meniscus in millimeters,
w the vapor pressure of the water at room temperature,
p the corrected barometric pressure.

The weight of the liquid used, divided by the volume of the vapor in liters, gives the standard density. The molecular weight is obtained by multiplying this density by 22.4.

Apparatus and Chemicals Required

The standard Victor Meyer apparatus or Weiser's modification of the same (see Fig. 1), 2 iron stands, 3 rings, clamp, Bunsen burner, wire gauze, eudiometer, pneumatic trough, thermometer (0–100°), pumice, glass beads, glass wool or cotton, glass-stoppered vials.

Volatile liquids for investigation.

The assembled apparatus is shown in Fig. 1. The inner vaporization tube is securely held in place within the outer jacket by means of a cork split vertically, with holes to fit the inlet and exit tube of the apparatus and the bent glass tube for the escape of the steam. The two portions of the cork are fastened firmly together by means of a wire around the top.

Method of Procedure

Fill the bulb of the jacket two-thirds full of water and support the jacket on a wire gauze in a quiet place free from air currents.

Place the inner tube in position and fasten it securely by means of the cork. Fill the dish which serves as pneumatic trough with water and let the end of the capillary delivery tube dip beneath the surface of the water. Fill the graduated eudiometer tube with water, invert it, and clamp it near the delivery tube in such a way that it can be quickly moved over the tip.

[1] The standard Victor Meyer apparatus, or Weiser's modification (*J. Phys. Chem.*, **20**, 532, 1916), may be used with equal facility. The description in the text and Fig. 1 apply to Weiser's modification. When using the standard Victor Meyer apparatus, the same directions apply.

Heat the jacket with a low flame and, as soon as the water begins to boil, adjust the height of the flame in such a manner that steam just escapes from the bent glass tube.

Weigh about 0.1 g. of the assigned liquid into the small glass-stoppered vial and stopper tightly.

Close the vaporization tube by a rubber stopper and continue to boil the water in the jacket. When no more air bubbles are seen to escape from the capillary delivery tube, remove the stopper and place the eudiometer over the tip of the delivery tube.

Loosen up the stopper of the little vial so that it will not stick later on, drop it into the vaporization tube with the left hand, and immediately close the tube with the stopper held in the right hand, being careful to secure an airtight joint.

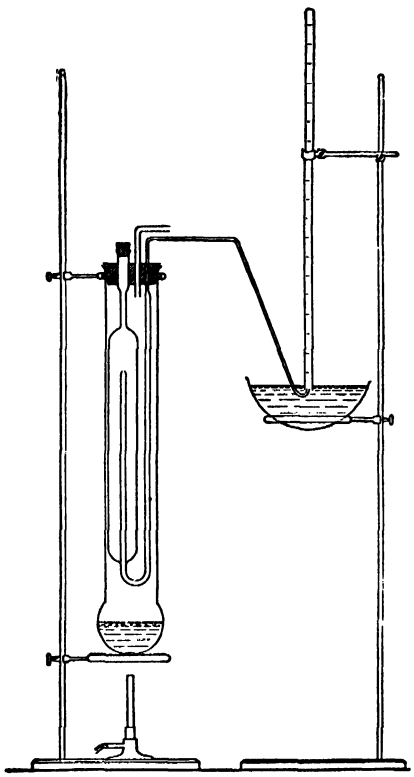

Fig. 1

The sample vaporizes and displaces an equal volume of air into the measuring tube.

When air bubbles no longer come over into the eudiometer tube, remove the rubber stopper again, turn off the gas, and transfer the stand carrying the eudiometer and pneumatic trough to a place where the temperature of the gas collected may attain room temperature.

Record the volume of gas, the height of the meniscus inside the eudiometer, measured above the level of the water in the trough, the temperature of the surrounding air, and the barometric pressure.

Calculations

From the weight of the liquid, the volume, the temperature and the pressure of the air collected calculate:

1. The specific gravity of the vapor with respect to air.
2. The density of the vapor under standard conditions.
3. The molecular weight of the compound.

EXPERIMENT 3

GRAHAM'S EFFUSION LAW; DENSITIES OF GASES

Object

To apply Graham's effusion law to the determination of gas densities and molecular weights.

Discussion

According to Graham's effusion law, the rates at which gases diffuse through small openings or porous walls are inversely proportional to the square roots of their densities. Dealing with two gases, A and B, we are thus enabled to formulate the equation:

$$r_A/r_B = \sqrt{d_B}/\sqrt{d_A}$$

where r and d are, respectively, the rates of diffusion and densities.

If we are concerned with equal volumes of two gases diffusing under identical conditions, it is obvious that rates will be inversely proportional to diffusion times:

$$r_A/r_B = t_B/t_A$$

Hence the times required for equal volumes of two gases to diffuse under identical conditions are directly proportional to the square roots of the densities of the gases:

$$t_A/t_B = \sqrt{d_A}/\sqrt{d_B}$$

In applying this principle to the determination of the density of a given gas, the time required for a definite volume of gas to escape from the apparatus, under certain definite changing conditions, is compared with the time required for an equal volume of some standard gas, such as air, to escape under identical changing conditions. When air is taken as standard, its "specific gravity" is unity. The density of air is 1.293 g. per liter.

Apparatus and Chemicals Required

Schilling's specific gravity gas apparatus, stopwatch.
Tanks containing oxygen, hydrogen, nitrogen, illuminating gas.

The apparatus (Schilling's) is arranged as shown in Fig. 2. The effusion tube, held tightly at its upper end by means of a wood clamp, weighted by a lead disk, is submerged in the water to a certain depth which must not change in order that the average pressure under which the gases effuse remains the same throughout the whole experiment. The hole in the platinum foil through which the gases effuse must be exceedingly small. It is punched by means of a very fine needle and if necessary can be hammered down until a very small opening remains. The foil is cemented to the end of stopcock A by means of china cement or universal wax (a mixture of one part of Venetian turpentine and four parts of beeswax).

Method of Procedure

Close stopcock A, open B, and fill the effusion tube with air, either by blowing it in from the laboratory air lines or by lifting the tube out of the water.

Close B, replace the tube, and see that the water in the outer cylinder rises to within an inch of the top.

See that the water in the apparatus is saturated each time with the gas under observation and that it has the temperature of the room.

With stopwatch in hand, open stopcock *A* and allow the air to pass through the opening in the foil. Start the watch when the rising water passes the mark on the lower constriction of the effusion tube and stop it when the water passes the mark on the upper constriction.

Fill the tube again with air and repeat the observation and continue until at least three determinations have been made which check to two-fifths of a second.

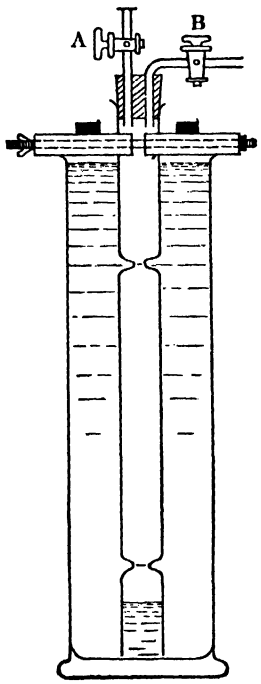

FIG. 2

Open both stopcocks and pass hydrogen through the apparatus until all the air has been replaced by hydrogen, then close *A* and fill the tube with hydrogen, raising it if necessary to secure the entry of a sufficient amount of gas.

Close *B*, open *A*, and record the time required for this gas to effuse through the opening. Repeat the operation until at least three good checks have been obtained.

Replace the residual hydrogen with illuminating gas from the laboratory fuel lines, performing the operation under the hood to prevent the escape of toxic gases into the room.

Operate as before and obtain at least three determinations which check to two-fifths of a second.

Calculations

Calculate the density, the specific gravity (air = 1), and the molecular weight of each of the gases used. (In the case of a mixed gas, the "apparent" molecular weight is obtained.)

EXPERIMENT 4

VAPOR PRESSURE OF LIQUIDS

Object

To determine the vapor pressures for a liquid at various temperatures, and to draw the vapor pressure curve.

Discussion

In using any dynamic method for determining the vapor pressure of a pure liquid or a solution, the vapor pressure of the liquid, confined in a closed system, is balanced by a manometer containing mercury or some other suitable fluid.

The isotensiscope is a convenient device for measuring the vapor pressure of a liquid. Its use is particularly recommended for pure liquids.

Apparatus and Chemicals Required

Isotensiscope or an equivalent vapor pressure apparatus, 2-liter beaker, condenser, open U-tube manometer (each arm 800 mm. long), iron stand, 3 clamps, Bunsen burner, electric hot plate or electric immersion heater (preferred) for heating the bath, heavy 4-gallon bottle, three-way stopcock, suction pump, thermometer (0–110°), thermometer (0–250°), stirring apparatus, glass and rubber tubing, siphon to remove liquid from beaker.

The arrangement of the apparatus is readily understood from Fig. 3. The isotensiscope consists of a cylindrical bulb of about 25-ml. capacity sealed to a 10-ml. pipette bent as shown in Fig. 4 and connected to a reflux condenser by means of a ground-glass joint. The condenser communicates on the left with the manometer, and on the right with a three-way stopcock, one arm of which leads to the reservoir bottle, the other to the atmosphere. The reservoir bottle is connected to a suction pump. For measuring vapor pressures above atmospheric, the reservoir bottle is connected to a low-pressure air line.

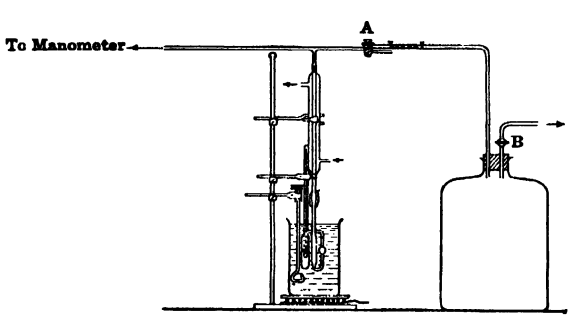

FIG. 3

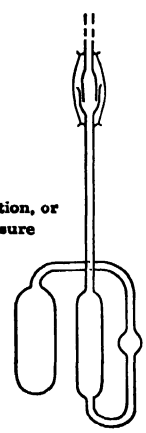

FIG. 4

Method of Procedure

Clean and dry the isotensiscope, and assemble as shown in Fig. 3. Apply suction to the apparatus, close *A*, and see that there are no leaks. If the apparatus is tight, admit air through *A*, remove the bulb, and fill it about two-thirds full of the liquid to be investigated.

Reassemble the apparatus and fill the bath with water for temperatures up to 100°, or with

oil or glycerol for higher temperatures. Turn stopcock A, so that the system is open to the atmosphere, commence stirring, and heat the bath until the liquid in the tube commences to boil. After sufficient condensate has collected in the trap to seal it, continue the boiling long enough to expel all air from the space between the main body of the liquid and the trap.

After determining the boiling point at atmospheric pressure, turn A so that it connects with the bottle, apply suction, and open B for a short time, thereby reducing the external pressure by 5 to 10 cm. Shut B, watch the pressure and temperature, and take their reading at the moment when the liquid levels in the two arms of the trap are again at the same height. *It is very important, that air is not permitted to be sucked back into the bulb.* As soon as the outside pressure becomes greater than the inside pressure, open B again for a short while and again record temperature and pressure when equality of pressure is attained. The cooling of the liquid in the beaker may be accelerated by removing some of it through a siphon and by carefully adding some cold liquid (at some distance from the bulb of the isotensiscope). The readings are continued until the temperature of the bath has dropped to about 25 or 30°. Finally, disconnect the suction pump and admit air gradually through B, until the liquid in the bulb is again under atmospheric pressure.

Calculations

1. Plot the vapor pressure curve.

2. Plot, on the same sheet, the vapor pressure curve for the same liquid from data given in tables and compare your results with those given in the literature.

3. Calculate the (average) heat of vaporization over a small temperature interval, using the equation of Clapeyron-Clausius:

$$\Delta H = \frac{(2.303)(R)(T_2)(T_1)}{(T_2 - T_1)} \log \frac{p_2}{p_1}$$

EXPERIMENT 5

SURFACE TENSION, PARACHOR, AND ASSOCIATION FACTOR OF PURE LIQUIDS

Object

To measure the surface tension of an assigned liquid by the capillary-rise method, to calculate the parachor, the association factor, and the critical temperature.

Discussion

For water and many other liquids which readily wet glass, the surface tension may be measured by observing the height to which those liquids rise in capillary tubes. The equation used is the following:

$$\gamma = \tfrac{1}{2}hdgr \qquad [1]$$

where γ is the surface tension in dynes per centimeter (ergs per square centimeter),
h the capillary rise in centimeters,
r the radius of the tube in centimeters,
d the density of the liquid,
g the acceleration due to gravity.

Ramsay and Shields showed that the "surface energy" of a given liquid depends on its temperature and on the critical temperature as follows:

$$\gamma\left(\frac{M}{d}\right)^{2/3} = k(t_c - t - 6) \qquad [2]$$

From equation 2 it may easily be shown that the rate of change of surface energy with temperature is the constant k:

$$\frac{\gamma_1\left(\frac{M}{d_1}\right)^{2/3} - \gamma_2\left(\frac{M}{d_2}\right)^{2/3}}{t_2 - t_1} = k \qquad [3]$$

If the liquid is unassociated, the value of k is 2.12; if associated, k comes out less than this value. For an associated liquid, the degree of association x is given by:

$$x = \left(\frac{2.12}{k}\right)^{3/2} \qquad [4]$$

If the molecular weight of the liquid is known, and the densities of the liquid and its vapor are determined at the temperature at which the surface tension is measured, the value of the parachor may be calculated. The parachor, calculated from the equation following, has been shown to be an additive and also a constitutive property for many liquids:

$$P = \frac{M\gamma^{1/4}}{d_l - d_v} \qquad [5]$$

where P is the parachor,
M the molecular weight,
γ the surface tension,
d_l the density of the liquid,
d_v the density of the vapor, at the same temperature.

Apparatus and Chemicals Required

Iron stand, Bunsen burner, ring, clamp, tall 2-liter beaker, stirrer, thermometer, capillary tubes (stems of broken thermometers are excellent) or small-bore glass tubing which may be drawn to capillary size as needed. Cathetometer (or mm. scales), microscope fitted with ocular micrometer and stage micrometer, freezing-point tube, pyknometer.

Bottles containing water and other liquids to be investigated.

Method of Procedure

For the capillary tubes, the student may use either small-bore thermometer stems or he may draw out his capillaries as they are needed. The latter procedure is to be preferred since freshly drawn tubes are clean.

It is very essential that the utmost care be observed in order to avoid grease films and other forms of contamination which will vitiate the results. If thermometer stems are used, they must be carefully cleaned with hot cleaning solution before use.

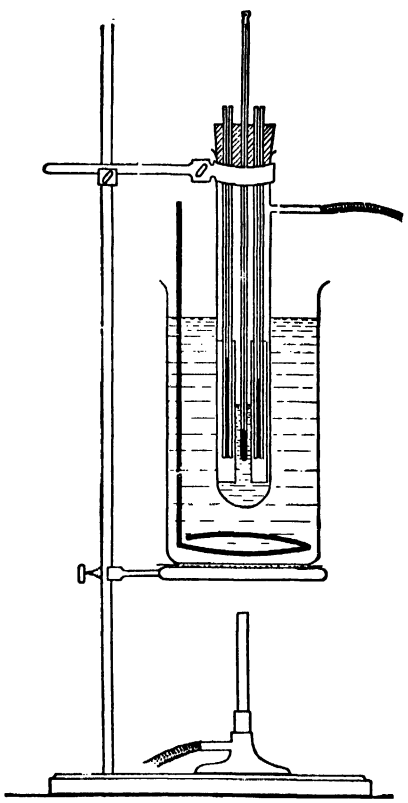

FIG. 5

Assemble the apparatus as indicated in Fig. 5, placing the liquid to be investigated inside the freezing-point tube and water in the beaker which serves as a constant temperature bath. Bring the temperature to 20°. Blow gently into a rubber tube connected to the side arm of the apparatus in order to force the liquid up into the capillaries to a height greater than that of equilibrium. Then allow it to come to equilibrium.

Measure the height to which the liquid rises and note the exact point at which it stands in each capillary.

Remove the tubes from the apparatus, cut them off exactly at the point where the meniscus stood, and measure the diameter of each tube with the measuring microscope. At least three measurements should be made across diameters which intersect each other at 60°.

Assemble new tubes in the apparatus, raise the temperature to 40°, and repeat the observations. Then make another set of observations at 60°.

Using a pyknometer, determine the density of the assigned liquid at 20°.

Calculations

1. Calculate the surface tension at each temperature.
2. By means of equation 3, calculate the rate of change of surface energy between 20° and 40° and between 40° and 60°.
3. From the two values of k thus obtained, calculate the association factor between 20° and 40° and between 40° and 60°.
4. From your best measurement of surface tension, calculate the critical temperature for the liquid, using equation 2.
5. Calculate the parachor for the liquid used from the surface tension and the density of the liquid at 20°. The density of the vapor may be neglected.

EXPERIMENT 6

SURFACE TENSION, DROP-WEIGHT METHOD

Object

To measure surface tension by the drop-weight method.

Discussion

The capillary-rise method of measuring surface tension described in the preceding experiment presents certain difficulties which render it unfit for work of the highest accuracy. Many years ago Tate showed that the following relation exists between the weight of an ideal drop falling from a specially prepared tip and the surface tension:

$$W = mg = 2\pi r\gamma \qquad [1]$$

where m is the mass of the drop,
g the acceleration due to gravity,
r the radius of the tip in centimeters,
γ the surface tension in dynes.

Harkins has shown that although the equation of Tate holds for an ideal drop, it requires a certain modification if it is to represent the true relation between the weight of a drop falling from a given tip and the surface tension. He has proposed the following modification of the Tate equation:

$$W = mg = 2\pi r\gamma F \qquad [2]$$

where F is a function of the radius of the tube and the reciprocal of the cube root of the volume of the drop. Values for F corresponding to various values of $\frac{r}{\sqrt[3]{V}}$ are given in Table 3 in the Appendix.

In carrying out a measurement, one accurately determines the weight of a series of drops of the liquid under investigation which have been allowed to form very slowly on a specially prepared tip. From the average weight of one drop, its volume is determined $\left(V = \frac{m}{d}\right)$. The radius of the tip is accurately measured. F is taken from Table 3, and the surface tension found by solving for γ in Equation 2:

$$\gamma = \frac{mg}{2\pi rF} \qquad [3]$$

Apparatus and Chemicals Required

Thermostat with glass sides, thermometer, student drop-weight apparatus, made by sealing about 20 cm. of capillary tubing (6-mm. diam. and 1.5-mm. bore) to a 10-ml. pipette and bending it to the form shown in Fig. 6. Large weighing bottle (75 × 35 mm.) fitted with a two-hole rubber stopper, 2 glass-stoppered weighing bottles (40 × 25 mm.) glass and rubber tubing, 2 Hoffman clamps, micrometer calipers.

Chromic acid cleaning solution, sodium hydroxide solution, distilled water, benzene, or various solutions for investigation.

The assembled apparatus is shown in Fig. 6.

It is of the utmost importance that the tip of the dropping pipette be ground to a plane surface,

perpendicular to the axis of the tube, and that the edges of this surface be free from chips and flaws. This is most conveniently done by carefully clamping the lower portion of the pipette in a block of brass, as in Fig. 7, filling the space between the glass and the countersunk portion of the block with deKotinsky cement, or Wood's metal. The tip is then ground by hand with 180-mesh silicon carbide and 3F emery on a glass plate, until observation shows it to be perfect. The brass block is then removed and the tip thoroughly cleaned.

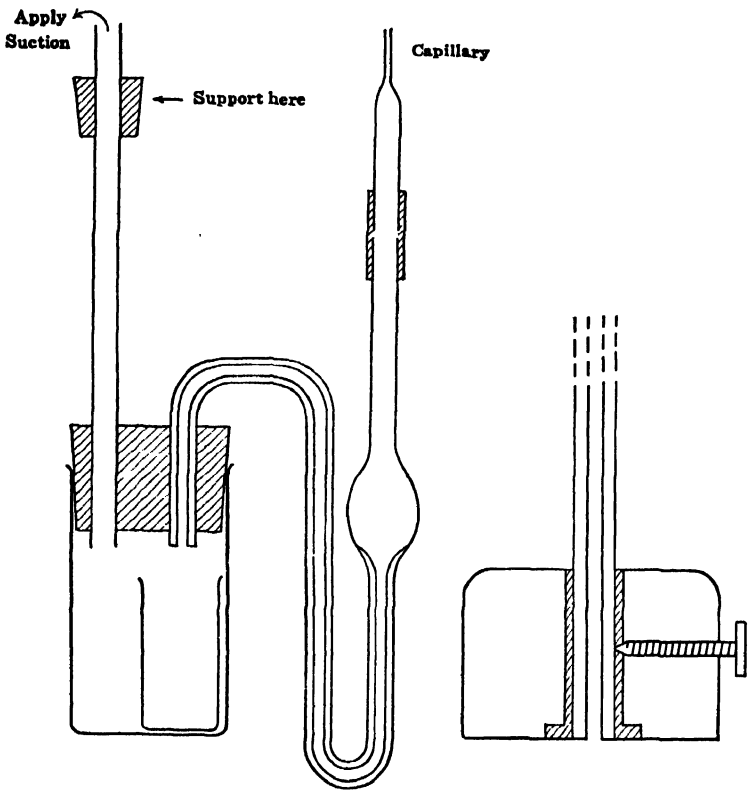

Fig. 6 Fig. 7

Method of Procedure

The glass parts of the apparatus should be carefully cleaned with hot chromic acid, and the rubber parts boiled with sodium hydroxide solution to remove all traces of grease.

Place in the dropping pipette a quantity of the liquid to be investigated sufficient to bring the level in the bulb slightly higher than the level in the tip, and clamp the apparatus vertically in the thermostat, with a clean, dry, and weighed weighing bottle in place beneath the tip.

The upper arm of the pipette should be connected to a glass tube drawn out to a fine capillary, as shown, and the glass tube entering the receiving vessel should have a length of rubber tubing connected to it. These accessories are for the purpose of assisting in the accurate control of the rate of drop formation.

After the apparatus and contents have attained the temperature of the bath, apply gentle suction to the rubber tube attached to the receiver, and draw a drop out on the tip. This drop should be allowed to hang on the tip for at least 5 minutes before it is allowed to fall off by its own weight. Succeeding drops are then drawn to almost full size, then allowed to grow to full size slowly. The total time for formation of succeeding drops should be about 1 minute.

Collect 20 drops in the manner outlined above, remove the weighing bottle from the receiving tube, stopper it quickly, and determine the weight of the 20 drops.

Reassemble the apparatus, draw 5 more drops in a new tared weighing bottle, and determine their weight. The weight of the last 5 drops drawn, subtracted from that of the first 20, gives the weight of 15 drops, corrected for vaporization losses.

Measure the diameter of the tip with micrometer calipers, taking it across at least 4 diameters. (Use care not to damage the tip during this operation.)

Calculations

1. Find the surface tension and compare its value with that given in the literature.
2. Compute the value of the parachor, if the liquid under investigation is a pure liquid (Experiment 5).

EXPERIMENT 7

VISCOSITY

Object

To measure relative viscosity and determine the viscosity-composition curve for a two-component liquid system.

Discussion

The absolute viscosity of a liquid is defined as the force required to move a plane of unit area at unit velocity with respect to another parallel plane separated by unit distance, the space between the planes being filled with the liquid under observation. Absolute viscosity (η) may be measured by observing the rate of flow through capillary tubes, and applying Poiseuille's law:

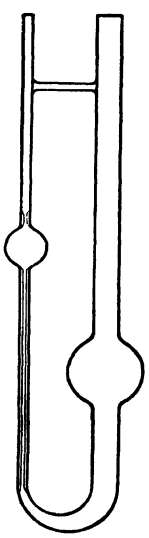

FIG. 8

$$\eta = \frac{dp \cdot g\pi r^4}{8\,vl}$$

where dp is the pressure drop across the tube in grams per square centimeter,
g the acceleration due to gravity in centimeters per second, per second,
r the radius of the tube in centimeters,
v the volume delivered in unit time in milliliters per second,
l the length of the tube in centimeters.

The direct measurement of absolute viscosity is a somewhat difficult procedure.

The relative viscosity of a liquid is the ratio of its absolute viscosity to that of water at the same temperature. Relative viscosities may easily be measured by means of a modified Ostwald viscometer, Fig. 8. With this instrument the following relationship exists between the absolute viscosities of two fluids:

$$\eta_1/\eta_2 = d_1t_1/d_2t_2$$

where d represents density, t outflow time.

Apparatus and Chemicals Required

Constant temperature bath, capillary viscometer, stopwatch.
Binary liquid system made up to contain 0, 20, 40, 60, 80 and 100 molar per cent of liquid B, Westphal balance.

Method of Procedure

A. STANDARDIZATION OF THE VISCOMETER. Thoroughly clean the instrument with hot chromic acid cleaning solution, then rinse with distilled water, and dry. Pipette the proper amount of distilled water into the instrument, clamp it vertically in the constant-temperature bath, and allow the temperature to reach 20°. Be certain that the feed bulb of the instrument is immersed in the bath.

Attach a short length of rubber tubing to the small arm of the viscometer and draw the liquid over into the feed bulb. Allow it to run back of its own accord, recording the time required for the upper meniscus to successively pass the two calibration marks.

Repeat until check determinations are obtained.

B. Determinations of Relative Viscosities. Prepare solutions of an assigned pair of consolute liquids with 0, 20, 40, 60, 80, and 100 molar per cent *B*. Determine the outflow time for each of these solutions, as directed under A.

Determine the density of each solution at 20°, using either a Westphal balance or a pyknometer.

Calculations

1. Calculate the relative viscosity of each liquid and solution.
2. Calculate the absolute viscosity of each liquid and solution. (Consult Table 4 in the Appendix.)
3. Plot the viscosity-composition diagram for the system used.

EXPERIMENT 8

REFRACTIVE INDEX, DENSITY, AND MOLECULAR REFRACTIVITY OF LIQUIDS

Object

To determine the index of refraction and the density of a given liquid and to find its specific and molecular refractivity.

Discussion

When a monochromatic ray of light passes from one transparent, isotropic medium into another, it is refracted, and the degree of refraction is such that the ratio n of the sines of the angles of incidence and refraction is constant and equal to the ratio of the velocities of the light in the two media. This is the well-known law of Snell:

$$n = \frac{\sin i}{\sin r} = \frac{v_1}{v_2}$$

In order to make n a definite, characteristic constant for a given substance, v_1 is referred to the velocity of light in vacuo. Since this velocity is a maximum value, n is always greater than unity. The velocity of light in vacuo is independent of the wave length. In any other medium both the light velocity and n vary with the wave length.

Ordinarily air is chosen as the reference medium. In that case the refractive index with respect to air must be multiplied by the ratio $v_{\text{vacuum}}/v_{\text{air}} = 1.00029$, in order to get the true refractive index. Except for work of the highest accuracy this correction is often not applied.

In the types of refractometers commonly employed for the determination of n, the light is made to pass at an angle of incidence of 90° from the medium for which n is to be found into a glass cell of known high refractive index N. The angle i at which the ray emerges into air is measured and enables one to calculate n:

$$n = \sqrt{N^2 - \sin^2 i} \qquad [1]$$

The index of refraction depends not only on the wave length used, as stated before, but also on the conditions which affect the density of the medium, such as temperature and pressure. In order to express the "refractive power" of a medium in such a way that it is independent of variations in temperature and pressure, the terms specific refraction r and molecular refraction are calculated from n and d (density).

According to Lorenz and Lorentz:

$$r = \frac{1}{d} \cdot \frac{n^2 - 1}{n^2 + 2} \qquad [2]$$

The molecular refraction is obtained by multiplying the specific refraction by the molecular weight of the substance.

Apparatus and Chemicals Required

Refractometer, thermostat, preferably at 20°, pyknometer.

Bottle containing distilled water, sample bottles containing different organic liquids, silk paper to clean prisms of refractometer.

Fig. 9 represents the Abbe refractometer, which is widely used in this country and is most satisfactory for general laboratory practice, as it is easy to handle and is so constructed that it

can be used with daylight and gives values corresponding to the "D" line. [For accurate setting it is necessary, however, to use sodium light (see page 108)]. It consists of two prisms of flint glass with a refractive index of 1.75 which can be separated so as to allow the introduction of a few drops of liquid. The prisms can be rotated by means of a movable arm *M* which carries the reading glass *R*. The position of the border line of total reflection is observed through the fixed telescope *T*, and by turning the movable arm it is made to coincide with the intersection of the cross hairs in the telescope. The arc *A* is graduated so as to read directly refractive indices (between 1.3 and 1.7) to the third decimal place. The fourth decimal is estimated with an accuracy of 2 units by means of the lens *R*. The compensator *C*, composed of two similar Amici prisms,

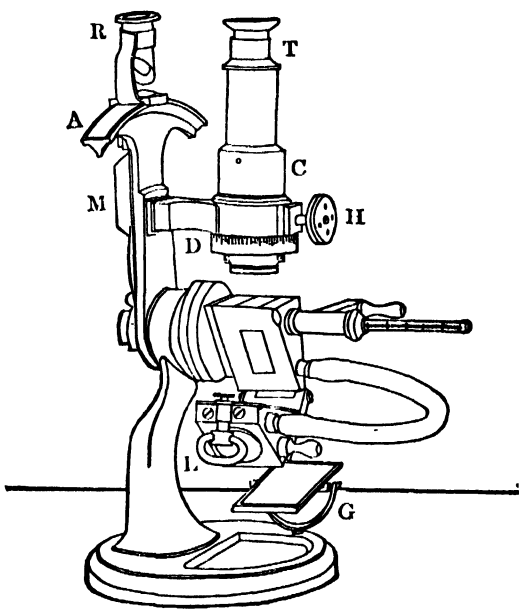

Fig. 9

rotated simultaneously in opposite directions by the milled head *H*, is used to produce a dispersion equal but opposite to that of the liquid and permits the border line to be changed from a colored band to a sharp, colorless line. By taking the reading on the divided drum *D* and using the table supplied with the instrument, the dispersion may also be found. A heating arrangement furnished by the makers or a large thermostat, permits the circulation of water at a given temperature through the casing of the prisms.

Method of Procedure

Place the instrument on a table near the window, but not in direct sunlight, and provide a large constant temperature bath, making connections for the circulation of the water through the casings in a slow but steady stream.

Turn the latch *L*, release the lower prism, and swing it into the position shown in Fig. 9.

In order to test the correctness of the adjustment of the refractometer, place a drop of distilled water on the glass surface, close the prisms, and secure them by means of the latch *L*, rotate the prisms by turning the movable arm (also rotate the mirror *G* in such a way that it reflects light on the prisms) until the border line appears in the field.

Turn the screw head *H* and thereby adjust the compensator so that the colored band due to dispersion disappears and a sharp boundary line is obtained.

Finally rotate the arm *M* until the line coincides with the intersection of the cross hairs and take the reading to the fourth decimal place. Also read the temperature.

Repeat the readings at least three times and take the mean, comparing the result with the data given for water on Table 5 in the Appendix.

Open the latch, drop the lower prism, clean the polished glass surfaces with a little alcohol and silk paper (do not use filter paper), and operate on the liquid(s) assigned for investigation in exactly the same manner as outlined above.

In order to be able to calculate the molecular refractivity it is necessary to determine the density of the liquid at the temperature for which the readings were taken. Any of the well-known types of pyknometers may be used.

The density is given by the formula:

$$d_{4^\circ}^{t} = \frac{W'D}{W} - \frac{0.0012\,(W' - W)}{W}$$

where W' is the weight of liquid at t,
W the weight of water at t,
D the density of water at t (see Table 6 in the Appendix).

The small fraction to be subtracted is a correction for the buoyancy of the air.

Find the weight of the pyknometer, first empty and then filled with water of the same temperature.

Calculations

1. From the observations calculate the specific and the molecular refractivity of the liquid under observation, using the Lorenz-Lorentz formula, and compare the values obtained with those given in the literature.

EXPERIMENT 9

DIELECTRIC CONSTANT AND DIPOLE MOMENT

Object

To determine the dielectric constant and the electric dipole moment of a polar substance.

Discussion

When molecules are placed in an electrical field such as that existing between two parallel plates uniformly electrically charged, displacements of positive and negative charges occur in the molecules, and they are said to be polarized. Because the centers of gravity of the positive and negative charges no longer coincide, the molecules become induced dipoles. The induced charges are opposite in direction to those of the charged plates, operating to reduce the intensity of the original field. If as a result of their structure the molecules have a permanent dipole, the centers of the unlike electrical charges being originally noncoincident, their effect on the field will be added to that due to the induced dipoles. Such molecules will have a permanent dipole moment, equal to de, where $+e$ and $-e$ are the magnitude of the charges, and d is the distance between the centers of the charge. Polar molecules tend to orient themselves in a field between charged plates so that the positive ends point toward the negatively charged plate, and conversely. They thus oppose and reduce the strength of the electrical field.

The dielectric constant ε is the ratio of the original intensity of the field E_0, in vacuo, to the intensity of the field E, when the molecules of the dielectric medium are between the plates, or

$$\varepsilon = \frac{E_0}{E} \qquad [1]$$

The dielectric constant is most readily measured by comparison of capacitances of condensers, which are directly proportional to the dielectric constant of the medium between the plates. If C_0 is the capacitance of a condenser in a vacuum and C the capacitance with a medium between the plates, then

$$\varepsilon = \frac{C}{C_0} \qquad [2]$$

The total molar polarization P is the sum of the distortion polarizations P_A and P_E due to the induced shifts of the atoms and electrons in the molecules and the orientation polarization P_0, a function of the permanent moments of the molecules, or

$$P = P_A + P_E + P_0 = P_D + P_0 \qquad [3]$$

The polarization may be calculated from the dielectric constant as follows:

$$P = \frac{\varepsilon - 1}{\varepsilon + 2} \cdot \frac{M}{d} \qquad [4]$$

where M is the molecular weight and d the density of the material.

The value of P_0 depends on the temperature according to

$$P_0 = \frac{4}{9}\pi \frac{N\mu^2}{kT} \qquad [5]$$

where N is Avagadro's number,
k is the Boltzmann constant (the gas constant per single molecule),
T is the absolute temperature,
μ is the electric moment.

The distortion polarization P_D may be calculated from the equation

$$P_A + P_E = P_D = \frac{n^2 - 1}{n^2 + 2} \cdot \frac{M}{d} \qquad [6]$$

where n is the refractive index, since for the same electromagnetic vibration frequency the part of the dielectric constant dependent on induced charges is equal to the square of the refractive index of the medium. It is often desirable to know the magnitude of the distortion polarization in an electrical field at low frequencies at which the refractive index is not easily measured. In many cases it is possible to obtain a close approximation by use of the value of P_D obtained from measurements with the "D" line of sodium, of much higher frequency.

If P and P_D are known, the value of the dipole moment can be computed, for, from the relations 3 and 5 above,

$$\mu = \left[\frac{9kT}{4\pi N}(P - P_D)\right]^{1/2} \qquad [7]$$

Because of the interaction between polar molecules, which tend to orient themselves in such a way that opposite charged ends of the dipoles are adjacent, experiments conducted on pure substances give incorrect values. When measurements are made on polar substances widely separated in dilute solutions in nonpolar solvents, dipole interaction is reduced, the polar molecules being more free to orient in a field. Assuming that the total polarization of the solution P_s is equal to the sum of the polarizations of the constituents, its value may be calculated from the dielectric constant of the solution:

$$P_s = \frac{\varepsilon_s - 1}{\varepsilon_s + 2} \cdot \frac{N_1M_1 + N_2M_2}{d_s} = N_1P_1 + N_2P_2 \qquad [8]$$

The subscripts 1, 2, and s refer to the solvent, solute, and solution respectively, and N to the mol fraction. The value of the polarization P_1 of the pure solvent may be calculated from direct measurement of its dielectric constant in the pure state by means of equation 4. Then, for a solution of known composition and density the value of P_2 may be calculated after measurement of the dielectric constant of the solution.

The value of P_D for the solute may be obtained approximately from the refractive index of the pure solute or from that of a solution in a nonpolar solvent; if from the latter a modification of equation 6 similar to equation 8 may be used.

Values of μ from measurements on several dilute solutions may be plotted against concentration, and the value of μ at infinite dilution found by extrapolation.

Measurement of the Dielectric Constant

Several methods for measuring capacitance may be used in determining dielectric constants. Choice is made according to the nature of the material being studied. The "heterodyne beat" method, as used to compare capacitances, gives good results for substances of low electrical conductivity. A vacuum-tube oscillator is used to generate alternating current in a circuit, the frequency of oscillation depending on fixed inductance and on variable capacitance, part of which is supplied by a calibrated condenser, Fig. 10. By variation of the condensers, the frequency of the circuit's oscillation is made equal to that of a standard oscillator. A dielectric cell consisting of some form of a condenser is introduced in the circuit in parallel with the calibrated condenser,

so that its effect is additive. The capacitance supplied by the calibrated condenser is then reduced until the frequency is again equal to that of the standard. The capacitance of the dielectric cell is equal to the required decrease in the capacitance of the calibrated condenser.

In this manner the capacitance of the cell is measured when in air and when filled with the material being studied.

These two values cannot be directly compared to give the dielectric constant since each includes the fixed value of the capacitances of the leads in air. For this reason the dielectric cell is made a variable condenser. Its capacitance is measured at two settings in air and at two settings

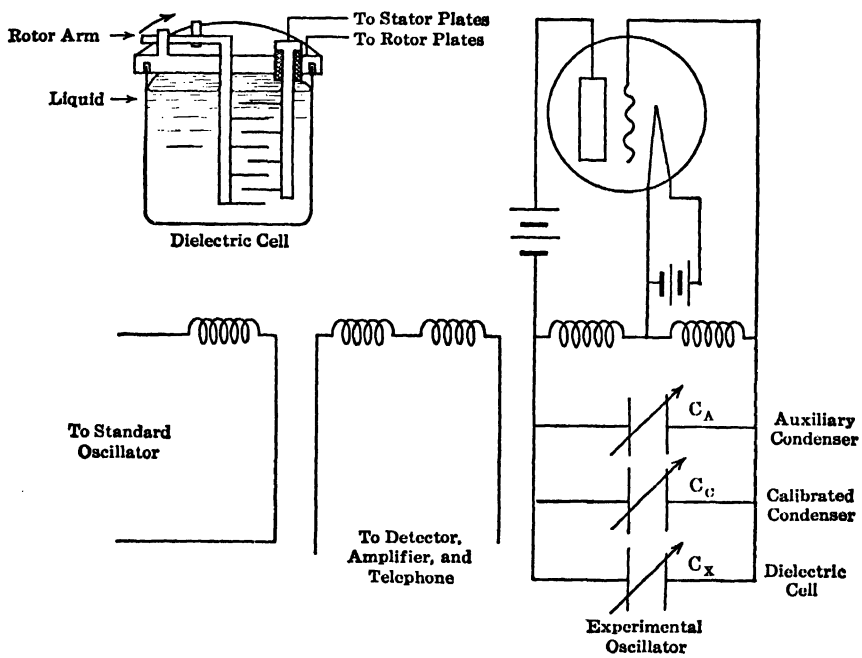

FIG. 10

in the dielectric medium. The ratio of the differences of these two sets of measurements gives the dielectric constant, the values of the lead capacitances being thus eliminated, or

$$\varepsilon = \frac{(C'_d - C''_d)}{(C'_a - C''_a)}$$

where C'_d and C''_d are the capacitances of the leads plus the condenser at two settings when the cell is filled with the dielectric material, and C'_a and C''_a the values at two settings when the cell is in air.

In order to determine when the frequencies of oscillation in the experimental and standard circuits are equal, they are loosely coupled to a third circuit containing a detector and amplifier and a speaker or telephone. The current flowing in the telephone circuit will be the resultant of the currents flowing in the two oscillators, and the frequency of the sound produced in the telephone will be equal to the difference between the frequencies of the two oscillators. When the difference in frequencies is very large, the "heterodyne beat" note thus formed is inaudible. As the difference decreases a note of decreasing pitch is heard. When the frequencies of the two oscillating circuits are equal the sound will disappear. If now the experimental oscillator is further adjusted, a note will again appear, increasing in pitch as the frequency difference increases. The minimum in the "heterodyne beat" note thus makes it possible to detect when the experimental frequency coincides with the standard.

Apparatus and Materials Required

Standard oscillator, experimental oscillator, and amplifier with telephone or speaker, all properly coupled, dielectric cell, refractometer, two 100-ml. beakers, 50-ml. pipette, wash bottle fitted with rubber pressure bulb.

Purified benzene, dilute solutions of ortho- and of paranitrochlorobenzene in benzene, or solutions of other polar solutes.

Method of Procedure

Set the standard oscillator and the amplifier to 1500 kc. or to the specified frequency. Close the switches supplying current to the whole apparatus. Set the rotor of the dielectric cell, which has been cleaned and dried, to the smaller of the two fixed values. With the calibrated condenser C_c set in the upper part of its range, adjust the auxiliary condenser C_A until the "heterodyne beat" note is heard and is reduced to a minimum. Record the frequency, and the reading of C_c. At the same frequency and the same setting of C_A, turn the rotor of the dielectric cell to its higher value, and this time make the adjustment to minimum beat by reducing the capacitance of the calibrated condenser. Record the reading of the condenser C_c. The difference between this and the previous reading is equal to the difference between the capacitance of the dielectric cell at the two settings. The scale may be calibrated in arbitrary units, since use will be made of the capacitance measurements only in ratios.

The above set of operations should be repeated with 50 ml. of pure benzene and with 50-ml. samples of one or more of the solutions of either ortho- or paranitrochlorobenzene provided. The cell may be cleaned by directing a stream of benzene over the plates from a wash bottle until the solution is washed off and allowing the benzene to evaporate. In order to avoid inhalation of benzene vapors, a rubber bulb should be used to apply pressure to the wash bottle.

Measure the refractive index and determine the density of each of the solutions used, recording the results together with the composition of the solution as given and the temperature. All measurements should be made at as closely the same temperature as possible. The density of the pure solvent should also be determined.

Calculations

1. Calculate the dielectric constant of benzene and of each of the solutions used.
2. From the mol fractions and molecular weights of solute and solvent and the density and dielectric constant of the solution, calculate the total molar polarization P_s of each solution.
3. Similarly, using the refractive index of the solution in place of the dielectric constant, calculate P_{Ds}, the distortion polarization per mol.
4. From the molecular weight, density, and dielectric constant, calculate the total polarization of benzene per mol. Since benzene is nonpolar, this is also the distortion polarization.
5. Calculate the molar total polarization and the molar distortion polarization for the solute in each solution, using the mol fractions of solute and solvent, the polarization of benzene, and the total and distortion polarization of each solution. Assume in every case that

$$P_s = P_1N_1 + P_2N_2$$

6. Calculate the electric moment for the solute molecule in each of the solutions used.
7. Plot the values of μ thus obtained against the concentration and, by extrapolation of the curve thus obtained, find μ at infinite dilution.

EXPERIMENT 10

TRANSITION POINTS IN THE SOLID STATE

Object

To determine transition points in the solid state.

Discussion

Changes of phase in chemical systems are invariably accompanied by an evolution or an absorption of heat. The transition point between two phases is the temperature at which they are in equilibrium. In many cases it is possible to determine such a transition point by observing the rate of change in temperature as the material under observation is being heated or cooled. By plotting the heating or cooling curve so obtained, the transition point may be easily detected by a break in the curve. In general, the "breaks" in cooling curves are more pronounced than those in heating curves. In this experiment the location of three transition points is determined (*A*) with the aid of an ordinary thermometer, (*B*) by means of a thermocouple, and (*C*) by means of a dilatometer.

A. TRANSITION POINT OF ANHYDROUS SODIUM SULFATE

Apparatus and Chemicals Required

Iron stand, clamp, iron ring, large copper or iron crucible (dimensions 8–10 cm.), test tube (length 15 cm., diam. 3.5 cm.), Bunsen or Méker burner, rubber tubing, thermometer (0–350°).

Bottle containing anhydrous sodium sulfate, container with dry sand.

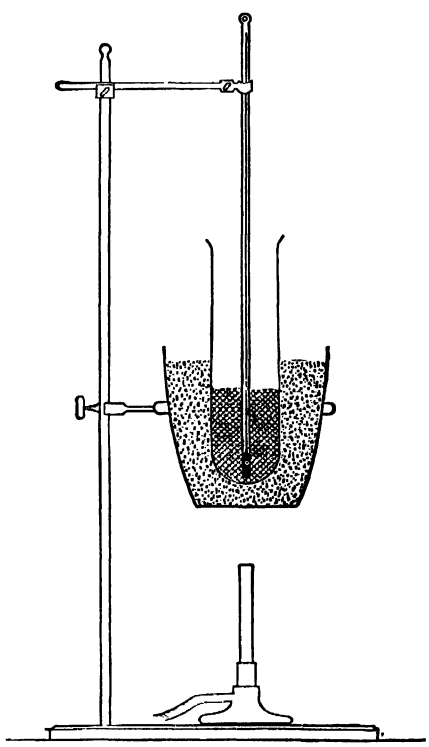

Fig. 11

The arrangement is readily understood from Fig. 11. The metal crucible is supported on an iron ring and contains dry sand which completely surrounds the test tube. The thermometer

is held in a central position inside the tube by a clamp, in such a way that the bulb is completely immersed in the finely pulverized salt (about 60 g.)

Method of Procedure

Having assembled the apparatus as indicated above, the crucible is heated by means of a Bunsen or Méker burner and the temperature of the thermometer recorded at intervals of half a minute, starting from 150° upward.

As soon as the temperature reaches 300°, the gas is turned off and, on cooling, the temperature is recorded as the salt cools from 300 to 150°.

Plotting the Results

1. Plot the temperature as ordinate against the time as abscissa and indicate by means of an arrow the temperatures of maximum heat absorption and evolution on the heating and cooling curves respectively.

In order to locate points more accurately, choose the unit of time on the horizontal axis of such length that the slope of the curve as a whole is under an angle of 45° to horizontal.

Due to the well-known phenomenon of hysteresis the transition temperatures obtained on the heating and cooling curves do not coincide. The true inversion or transition temperature lies somewhere between them.

B. TRANSITION POINT OF ANHYDROUS LITHIUM SULFATE [1]

Apparatus and Chemicals Required

Vertical electric tube furnace, crucible support, base-metal (chromel-alumel) thermocouple, sensitive millivoltmeter (0–45 or 50), copper wires.

Nickel or iron crucible containing 30–40 g. of anhydrous lithium sulfate, beaker or small Dewar flask, ice and water, crucible containing zinc, platinum crucible containing sodium chloride, two small pyrex tubes.

The apparatus is shown in Fig. 12. The hot junction of the thermocouple is placed directly in the center of the mass of finely pulverized salt. The cold junction is kept at 0° by means of cracked ice and water.

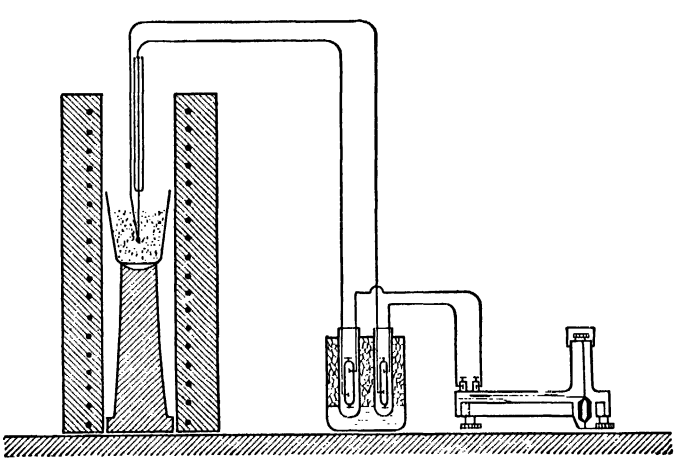

Fig. 12

Method of Procedure

1. Calibration of the thermocouple. Since the transition point of anhydrous lithium sulfate lies between the melting point of zinc, 419°, and that of sodium chloride, 801°, it is sufficient to

[1] Inasmuch as the heat of fusion of lithium sulfate (m.p. 860°) is only about one-fourth the value of its heat of transition [Hüttner and Tammann, *Zeit. anorg. Chem.* **43**, 215, (1905)], this salt is particularly well adapted for transition-point determinations.

calibrate the couple at these two temperatures. The zinc is placed in a pyrex tube, and the hot junction, protected by a thin tube of pyrex, is inserted in the center of the molten metal. The cold junctions are cooled to 0° by means of ice and water. A cooling curve is taken in the usual manner, starting from a temperature just above the melting point of the zinc. Millivoltmeter readings should be made and recorded at 15-second intervals until the metal has completely solidified. The potential observed over the flat portion of the cooling curve plotted from these readings represents the potential generated by the thermocouple assembly at 419°.

A platinum crucible containing pure sodium chloride is now placed in the furnace, and the hot junction is inserted directly into the center of the powdered salt. The salt is melted and a cooling curve is run as the salt solidifies. The salt is then remelted, and the thermocouple withdrawn. When this cooling curve is plotted, the potential observed over the flat portion of the curve represents the e.m.f. produced by the pyrometer at 801°.

2. Determination of the transition point. The crucible containing the anhydrous lithium sulfate is now placed in the furnace, the hot junction is inserted at the center of the salt, and the salt is heated at a rate of about 10° per minute. The salt is heated to a temperature of about 700°, when the current is turned off. During the period of heating, millivoltmeter readings are recorded at half-minute intervals.

As the salt cools, readings are again recorded at half-minute intervals.

Plotting the Results

From the cooling curves of zinc and sodium chloride, plot a calibration curve for the pyrometer. Compare your calibration curve with one produced from data given in Table 9 in the Appendix.

From the observations on lithium sulfate, plot millivolt readings as ordinates against time as abscissas. Make sure that the general slope of the heating and cooling curves is about 45°. Locate the transition point and determine its temperature from the calibration curve of the thermocouple.

C. TRANSITION POINT OF SILVER IODIDE

It frequently happens that the polymorphic forms of a chemical compound exhibit considerable differences in their densities. In such cases, transition points between the various phases may often be conveniently determined by observing the rate of change in volume as the temperature is changed. Silver iodide is a good illustration. Its cubic modification has a density of 5.68, and the hexagonal form a density of 5.49, and each of these two modifications possesses a characteristic color.

Apparatus and Chemicals Required

Iron stand, ring, wire gauze, two clamps and fasteners, test tube (5 × 20 cm.), glass stirrer, thermometer (250°), 10-ml. pipette, capillary tube (1-mm. bore × 100 cm. long), meter bar, copper wire, Bunsen burner, rubber tube.

Pure silver iodide, white mineral oil.

Method of Procedure

In constructing the dilatometer, the larger tube of the 10-ml. pipette is cut off and sealed about 1 cm. from the bulb. The smaller arm of the pipette is cut about 6 cm. from the bulb. About 20 g. of silver iodide are placed in the bulb and mineral oil is introduced until the bulb is filled, care being exercised that no air bubbles are permitted to remain in the oil.

The capillary tube is then sealed to the stem of the bulb and the meter bar is fastened to the capillary tube by means of copper wire. This completes the dilatometer.

The test tube is then clamped in a vertical position, so that it rests upon the wire gauze which, in turn, is supported by the iron ring. The dilatometer is placed in the test tube and is supported by a clamp attached to the meter bar. The thermometer is placed in the test tube, with its bulb

near the dilatometer bulb, the glass stirrer is inserted, and then the test tube is filled with mineral oil.

Heat is now applied, and the temperature is brought to about 120°. If the dilatometer was properly filled with mineral oil, the meniscus should now be in the capillary tube.[2] Now continue the heating at the rate of about five degrees per minute, stirring constantly, until the temperature reaches 170°, recording the position of the meniscus for each 2° rise. Also record the temperature at which a change in color takes place.

Continue the stirring and, as the system cools, record the temperature and the position of the meniscus each 2° down to 120°, and again note the temperature at which the color changes.

Plotting the Results

The dilatometer readings are plotted as abscissas against temperatures as ordinates, both curves being plotted on the same sheet of cross-section paper.

Indicate by means of arrows the temperatures at which color changes were noted.

Determine the average transition temperature from the two curves.

[2] If insufficient oil has been placed in the dilatometer, more may be added by attaching a small funnel to the top of the capillary tube by means of a short length of rubber tubing, heating the system to 175°, and introducing the required amount of oil as the system is cooled to room temperature.

EXPERIMENT 11

SOLUBILITY. THE VAN'T HOFF ISOCHORE

Object

To determine the solubility of a solid at two different temperatures and to calculate its heat of solution by means of the van't Hoff isochore.

Discussion

The solubility of a solid is conveniently determined by agitating an excess of the solute with the solvent until equilibrium is established, filtering a portion of the saturated solution and analyzing it for amount of solute and solvent present.

The van't Hoff isochore, as applied to solubility work, may be written as follows:

$$\frac{d(\log_e K_c)}{dT} = \frac{\Delta H}{RT^2}$$

where ΔH is the heat of solution per mole and K_c the solubility.

Integrating this equation between temperature limits in which the heat of solution does not change materially, making R equal to 1.99 cal. and passing to Briggsian logarithms, we obtain:

$$\log K_{c_2} - \log K_{c_1} = \frac{\Delta H}{4.581} \times \frac{(T_2 - T_1)}{T_1 T_2}$$

In the above equation, K_{c_1} and K_{c_2} are the solubilities at the two absolute temperatures T_1 and T_2, respectively, and ΔH is the heat of solution, in calories per mole.

Apparatus and Chemicals Required

Two thermostats, fitted for solubility work, at temperatures at least 20° apart (e.g., 25.00 and 45.00°), four 4-oz. oil-sample bottles, one 50-ml. and one 10-ml. pipette, short rubber tubes to fit the pipettes, and cotton, burette, and holder, one 250-ml. Erlenmeyer flask.

0.25 N alkali, distilled water, benzoic acid, phenolphthalein indicator solution.

Method of Procedure

Place about 3 g. of benzoic acid in each of two 4-oz. oil-sample bottles, add about 75 ml. of water, at a temperature 5° above that of the lower thermostat, stopper the bottles tightly, label them 1 and 2, shake the contents for a short time, and attach the bottles to the rotating device in the low temperature thermostat. Weigh out about 6 g. of benzoic acid and place this amount in each of two other oil-sample bottles 3 and 4 containing 75 ml. of water, previously brought to a temperature 5° above that of the higher thermostat. After vigorous shaking, the bottles are fixed to the rotator in the high temperature bath. It will be found that one or two hours of agitation is sufficient to bring about equilibrium.

The samples are analyzed by disconnecting and opening one bottle at a time and placing the neck just above the water in the thermostat. Attach a small piece of rubber tubing containing a wad of cotton to the 50-ml. pipette and suck a little over 50 ml. of solution from bottle 1. Remove the filter and adjust the contents of the pipette to the mark.

Transfer the sample to an Erlenmeyer flask and titrate with 0.25N alkali, using phenolphthalein as indicator.

The solutions in bottles 2, 3, and 4 are analyzed in like manner, but 10 ml. samples are withdrawn from bottles 3 and 4 and these last two samples are diluted with 40 ml. of distilled water before titration.

Assuming that the density of each solution is unity, calculate the weight of benzoic acid present in each sample per 100 g. of water.

Calculations

1. From the result of the titrations, compute the solubility at the two temperatures.
2. Find the heat of solution per mole, using the mean values obtained under 1.

EXPERIMENT 12

LOWERING OF THE FREEZING POINT. BECKMANN'S METHOD

Object

To determine the freezing point of a solvent and of dilute solutions of various known concentrations, and to calculate the molecular weight of the solute from freezing-point lowerings.

Discussion

When a solute is dissolved in a solvent, a lowering of freezing point occurs which is proportional to the effective molecular concentration of the solute. If the freezing points are carefully determined for a pure solvent and for a dilute solution containing a weighed quantity of solute dissolved in a known amount of solvent, the molecular weight of the solute may be calculated from the following equation:

$$M = \frac{1000K_f g}{\Delta T_f G} \qquad [1]$$

where M is the molecular weight,
K_f is the lowering of the freezing point per mol of solute per thousand grams of the solvent employed (see Table 7),
g is the weight of the solute,
G is the weight of solvent used,
ΔT_f is the lowering of the freezing point.

Accurate measurement of the freezing-point lowering is made possible by the use of the differential thermometer devised by Beckmann.

When the solute is an electrolyte, the effective molecular concentration will be greater than that calculated from the moles of electrolyte added to the quantity of solvent used, because of the dissociation of the solute into ions. The "apparent" molecular weight as determined from freezing point measurements on electrolyte solutions may be used to calculate the degree of ionization α, if the solute is a weak electrolyte. If i represents the true molecular weight divided by the "apparent" molecular weight, then

$$\alpha = \frac{i - 1}{n - 1} \qquad [2]$$

where n is the number of ions formed by the dissociation of one molecule of the electrolyte used.

Apparatus and Chemicals Required

Beckmann freezing-point apparatus, differential thermometer, 2 stirrers, reading glass, 10-ml. pipette. Ice and salt for producing a freezing mixture, sample bottles with various electrolytes and nonelectrolytes.

The apparatus is shown in Fig. 13. A mixture of water, crushed ice, and salt, sufficient to reach within an inch of the top, is placed in the large glass jar. The air jacket is fixed in this freezing mixture through the central aperture of the cover, and serves to prevent direct contact between the Beckmann freezing-point tube and the cooling bath.

Method of Procedure

Prepare a freezing mixture and maintain its temperature around $-5°$.

By means of a 10-ml. pipette introduce sufficient distilled water into the freezing tube to immerse the bulb of the Beckmann thermometer. Make each addition exactly 10 ml. The mass

of water used is determined by noting the temperature and obtaining the weight from Table 6 in the Appendix. Place the thermometer and stirrer in position in such a manner that the stirrer moves freely, and immerse the tube directly in the freezing mixture. It will be noticed that the water supercools several degrees before freezing begins, and that as soon as ice forms the temperature rises rapidly, approaching the freezing point (heat being liberated by the separation of ice).

Take the freezing-point tube from the cold bath, wipe it dry, and place it in the air bath, allowing equilibrium to be attained. Stir gently, tapping the stem of the thermometer at regular intervals, and record readings every 30 seconds, estimating thousandths of a degree by means of a reading glass. The value obtained when readings have become constant is taken as the freezing point of pure water. Plot these results on coordinate paper. Melt the ice and repeat the determination. Successive observations should agree to within 0.002° before proceeding.

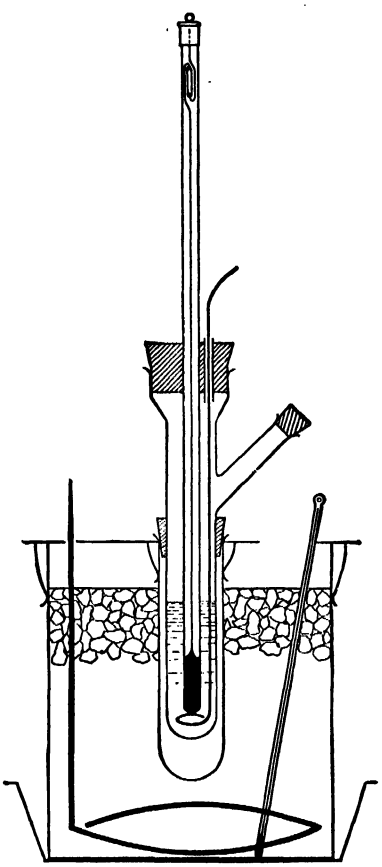

Fig. 13

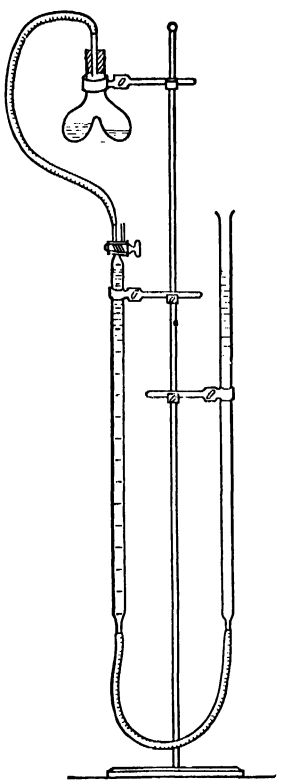

Fig. 14

Introduce about half a gram of solute, accurately weighed, and determine the freezing point of the solution. Inasmuch as the separation of the solid phase (ice) concentrates the solution, it is necessary to exercise extreme care in having the smallest possible amount of ice present at the time of final temperature reading. In case this precaution is not observed, results will be vitiated. When operating on solutions, it is best not to immerse the freezing-point tube directly in the cold freezing mixture. Should it, however, be necessary to do this in order to initiate the crystallization, it is advisable to melt the greater portion of the ice by holding the tube in the hand before placing it in the air bath. As before, record readings every 30 seconds until the equilibrium temperature has been located, and plot these values, taking the maximum temperature on the temperature-time curve.

Add two successive additional weighed portions of about 0.2 g. of solute and determine the freezing point of each solution.

When an appropriate solute is used, it is possible to determine the concentration from an analysis of the solution after its freezing point has been determined. For instance, if urea has been used as solute and water as the solvent in a freezing-point determination, analysis may be effected by the gas-evolution method, as follows:

Withdraw a 10-ml. sample of the solution to be analyzed and place it in one compartment of a gas-evolution flask (Fig. 14). In the other compartment place 25 ml. of sodium hypobromite solution (prepared by dissolving 100 g. of sodium hydroxide in 250 ml. of water and *slowly* adding 25 ml. of bromine). Exercise care that the two solutions do not mix.

Bring the water in the gas-measuring tube to the zero point, and connect the gas-evolution flask to this tube, as shown in Fig. 14.

As soon as the apparatus has attained uniform temperature, level up the water and take the initial reading. Then so manipulate the gas-evolution bottle that the two solutions it contains are thoroughly mixed. Gentle shaking will assist the evolution of gas. As fast as gas is evolved, lower the leveling tube in order to maintain atmospheric pressure within the system.

When the gas evolution is complete, allow the system to attain room temperature; then level the water and record the volume, temperature, and pressure.

The other samples are analyzed in a similar manner.

Following the procedure outlined above, 1 ml. of gas (nitrogen) collected *under standard conditions* is equivalent to 0.00288 g. of urea.

Calculations

1. Calculate the molecular weight (or the apparent molecular weight) of the solute at each dilution used.

2. If the solute is an electrolyte, calculate the degree of dissociation for each dilution and plot against concentration.

EXPERIMENT 13

LOWERING OF THE FREEZING POINT. VACUUM-FLASK METHOD

Object

To determine the apparent molecular weight and degree of dissociation of a weak electrolyte by the lowering of the freezing point, using the vacuum-flask method.

Discussion

The standard Beckmann method for molecular-weight determination by observations on the lowering of the freezing point possesses an inherent source of error. One determines the concentration of the solution being investigated by weighing both solvent and solute. When freezing takes place in dilute aqueous solutions ice separates and the solution becomes more concentrated. One is, therefore, unable to estimate the *exact* composition of the liquid phase at the freezing point. Obviously some method of *analyzing the solution* at the time when temperature readings are recorded will overcome this error.

In the vacuum-flask method, concentrations are determined by chemical analyses. Finely shaved ice and an aqueous solution of the solute under observation are thoroughly stirred in a vacuum flask until equilibrium is reached between the two phases. The temperature is noted and samples of the solution are withdrawn for analysis by suitable methods.

The apparent molecular weight and the degree of dissociation are calculated by means of equations 1 and 2, Experiment 12.

Apparatus and Chemicals Required

One wide-mouth vacuum flask (1-qt. fruit jar) fitted with a protecting jacket, stirrer, and cork stopper carrying (a) the Beckmann thermometer, (b) a long glass tube terminating near the bulb of the thermometer, for withdrawing samples, (c) a short tube for the introduction of samples, and (d) a hole for the stirrer, ice shaver, one 2-ml., one 5-ml., and one 10-ml. pipette, three 125-ml. and six 50-ml. Erlenmeyer flasks.

The solute is a weak electrolyte (acid or base). 0.1 *N* alkali or acid, phenolphthalein, burette, and holder, solution of weak electrolyte, such as $CH_2ClCOOH$.

The assembled freezing-point apparatus is shown in Fig. 15.

Method of Procedure

Fill the vacuum flask with shaved ice. It is important that the ice be shaved, and not merely cracked. Add sufficient cold distilled water to permit the stirrer to move freely.

"Set" the Beckmann thermometer, assemble the apparatus, stir regularly, and take temperature readings at half-minute intervals until constant values have been obtained. This constant value is taken as the freezing point of pure water.

By means of a small pipette, introduce sufficient solution of the solute to be investigated to lower the freezing point of the contents of the flask about one-quarter of one degree, and determine the freezing point of the solution by the method outlined above.

Without delay, insert the 10-ml. pipette through the sample withdrawal tube so that its tip is near the thermometer bulb. Withdraw about 5 ml. of solution, rinse the pipette with this, then withdraw two 10-ml. samples for analysis. These samples must be taken from the region around the thermometer bulb. In case the analysis does not give results that check, additional samples must be taken until concordant values are obtained.

When two checks have been obtained, add two additional quantities of the solute to obtain total lowerings of about one-half and three-quarters of a degree respectively, determine the freezing points, and withdraw samples for analysis as before.

Titrate the 10-ml. samples which were withdrawn from the vacuum flask with 0.1 *N* base (or acid) using phenolphthalein (or some other suitable indicator). A suitable weak acid is mono-

chloracetic acid. A concentrated solution is freshly prepared and kept in an amber-colored bottle, to prevent decomposition in the light.

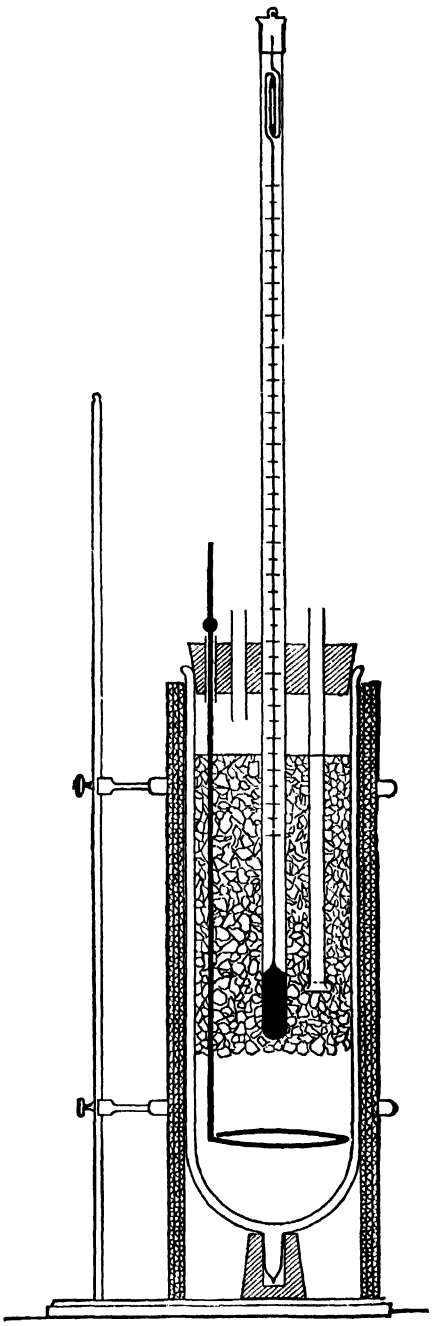

FIG. 15

Calculations

1. Compute the apparent molecular weight.
2. Plot molecular weight against concentration and likewise α *vs.* concentration.
3. Knowing the ionization constant of the weak electrolyte (Table 10), compute the degree of dissociation and compare the values obtained with those determined from the freezing-point data.

EXPERIMENT 14

ELEVATION OF THE BOILING POINT. THE COTTRELL APPARATUS

Object

To determine molecular weights of substances in solution by the elevation of boiling-point method.

Discussion

We have already seen (Experiments 12 and 13) how the approximate molecular weight of a substance in solution may be determined by observations on the lowering of the freezing point.

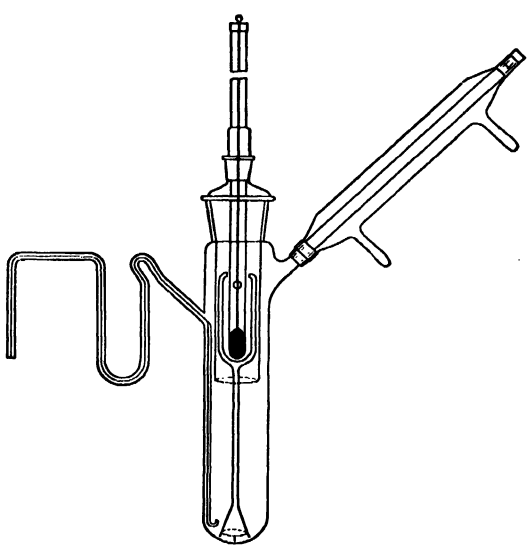

FIG. 16

The same type of information is obtained from observations on the elevation of the boiling point, but the results are somewhat less accurate on account of the fact that the constants are smaller and that slight variations in pressure and rate of boiling affect the thermometer readings.

The Cottrell boiling-point apparatus, Fig. 16, is one of the most satisfactory devices for boiling-point work. It embodies a jet device which keeps the thermometer bulb bathed in a stream of boiling liquid which has had opportunity to lose its superheat, and thus eliminates variations due to differing rates of boiling.

The size and shape of the mantle for the vapor intake should be adjusted to the liquid used as a solvent.

The equation used is similar to that given in the freezing-point method:

$$M = \frac{1000K_b g}{\Delta T_b G}$$

where M is the approximate (or apparent) molecular weight of the solute,
K_b the boiling-point constant for the solvent (see Table 8),
ΔT_b the boiling-point rise,
g and G the weight of solute and solvent, respectively.

Apparatus and Chemicals Required

Cottrell boiling-point apparatus, fitted with Beckmann thermometer and reflux condenser, microburner, weighing bottles containing solutes for observation.

Method of Procedure

Set the Beckmann thermometer for the boiling point of the solvent to be used and assemble the apparatus. Place a few bits of pumice or porous tile in the apparatus and run in a weighed or measured quantity of solvent sufficient to immerse the lower portion of the guard mantle. Shield the apparatus from drafts. Light the microburner, and adjust it so that boiling and "pumping" proceed regularly. It may be necessary to alter the size or position of the flame, or to carefully raise and lower the inner assembly, or to add more solvent, in order to start pumping. Once this action has been established at a regular rate, do not alter the flame.

Determine the boiling point of the pure solvent by taking half-minute readings until constant results are obtained. Gently tap the thermometer before each reading is made.

Weigh and introduce sufficient solute into the apparatus to obtain a rise in boiling point of about one-tenth of a degree. Determine the boiling point of this solution.

Make two more weighed additions of solute, determining the boiling point each time.

For work of the highest accuracy, samples of solution may be withdrawn and analyzed after each boiling-point determination. Greater precision may be obtained by the use of a second Cottrell apparatus containing pure solvent, to determine the boiling point of the solvent at the moment the boiling point of the solution under investigation is read.

Calculations

1. Calculate the approximate (or apparent) molecular weight for each dilution.
2. If the solute is a weak electrolyte, calculate the degree of dissociation.
3. Plot molecular weights and degrees of dissociation against concentration.

EXPERIMENT 15

ELEVATION OF THE BOILING POINT. THE EYKMAN METHOD

Object

To determine approximate molecular weights, using Eykman's apparatus.

Discussion

The boiling-point molecular-weight apparatus devised by Eykman gives entirely satisfactory results when used with low-boiling solvents such as CCl_4. It possesses the advantages of requiring neither a Beckmann thermometer nor a separate condenser; and the quantity of solvent may be estimated directly from the position of the upper meniscus on the thermometer scale.

The usual boiling-point formula (see page 60) is used for the calculations.

Apparatus and Chemicals Required

Two iron clamps, iron stands, large flanged "Pyrex" tube (50 × 400 mm.), Eykman boiling-point vessel fitting into jacket, thermometer (40–100°) graduated in tenths of degrees, microburner, rubber tubing, burette, holder.

Bottle containing pure carbon tetrachloride, bottle for carbon tetrachloride residues, small sample tube with azobenzene.[1]

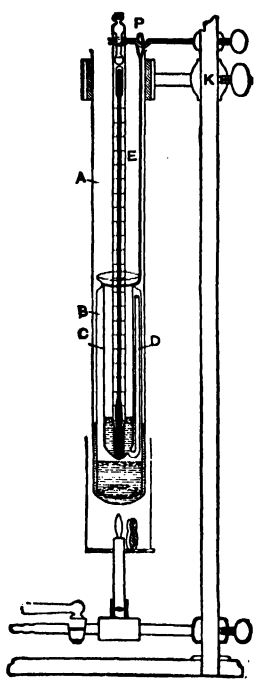

Fig. 17

Fig. 17 gives a sketch of the apparatus. The outer glass jacket *A*, held vertically by means of an iron ring or a clamp,* serves the double purpose of boiling vessel and air cooler.

The inner boiling-point vessel *B* (Eykman boiling-point tube), which fits snugly into this mantle, consists of an outer cylinder surrounding and fused at the top to a test tube *C*. A small-bore glass tube *D* is fused into the bottom of the test tube and passes upward between the walls of the latter and the cylinder. Vapor of the solvent enters the test tube through this small-bore tube and brings the solution to boiling.

The Eykman vessel is suspended from a clamp which also holds the thermometer in a central vertical position.

The thermometer should be graduated in tenths of degrees so that hundredths can be estimated by means of a reading glass.

Method of Procedure

Since both the boiling point and the volume of the solution are read on the thermometer, it is necessary first to calibrate the inner tube volumetrically.

In doing this, raise the inner vessel until its top comes flush with the top of the outer jacket and make sure that the inner vessel and the thermometer are both exactly vertical. The latter should always rest on the bottom of the inner tube.

From a burette filled to the zero mark with pure carbon tetrachloride, run a whole number of milliliters into the inner tube until the liquid rises to a point where the level can be read on the scale, and record this reading.

[1] CCl_4 is selected for its noninflammability and azobenzene for its color, which shows possible residues from a previous experiment at once.

Add exactly 1 ml. at a time, reading the volume each time on the thermometer, until 25 ml. have been added.

Prepare a table which will show the volume of the solution in the tube at any height shown on the thermometer.

Remove enough of the solvent from the inner tube to bring the level to the bottom of the scale and place about 50 ml. of pure carbon tetrachloride in the outer jacket.

Lower the Eykman vessel so that the bottom of the inner tube is just about 1 ml. above the level of the liquid inside the surrounding cylindrical tube.

Place a small flame under the outer jacket and adjust the flame in such a manner that the vapor condenses about 5 cm. above the top of the Eykman tube (at *E*, Fig. 17).

Take temperature readings every 15 seconds and record them. When the thermometer gives a value constant to hundredths of a degree, equilibrium has been reached.

Raise the inner vessel till its top comes flush with the top of the jacket and add from 0.15 to 0.200 g. of azobenzene, accurately weighed, observing care lest some of it stick to the thermometer or the side of the tube.

Lower the vessel to the same level as before and determine the boiling point of the solution. Be sure that the solution actually boils; this can readily be seen by observing whether the vapor of the solvent bubbles through the solution. If this does not take place the inner vessel should be lowered a little more.

Raise the tube to its previous height, *observe the volume*, using precaution to make sure that conditions are the same as in calibrating. Record volume.

Add successively 3 weighed quantities of azobenzene (0.15–0.200 g.) and note carefully the boiling point and the volume each time, as directed above.

When all the readings have been taken, turn off the gas, remove the thermometer, pour the residue from the vessel into a bottle provided for this purpose, and rinse both the thermometer and the tube with a few milliliters of pure carbon tetrachloride, transferring the liquid each time to the residue bottle.

Do not attempt to rinse and clean the apparatus with water.

Calculations

1. Assuming that the specific gravity of the solutions is practically the same as that of the pure solvent, find the weight of solvent used in each case.
2. Express the four concentrations in terms of grams of solute in 1000 g. of solvent.
3. Apply the boiling-point formula and calculate the molecular weight of azobenzene for each concentration. Obtain boiling-point constant from Table 8 in the Appendix.
4. Plot the molecular weights obtained as a function of concentration. This curve, when extrapolated to zero concentration, gives the molecular weight which most nearly approaches the theoretical value.

EXPERIMENT 16

VAPOR PRESSURE LOWERING BY A DISSOLVED SUBSTANCE. RAOULT'S LAW.

Object

To determine the approximate molecular weight of a substance in solution from measurements on the lowering of the vapor pressure of the solvent.

Discussion

Raoult's law states that, when a nonvolatile substance is dissolved in a given solvent, the relative lowering of the vapor pressure of the solvent is proportional to the ratio of the number of mols of solute present to the total mols of solute and solvent. It is usually formulated as follows:

$$\frac{p - p'}{p} = \frac{n}{n + N}$$

where p is the vapor pressure of the solvent,
p' that of the solution,
n the number of mols of solute,
N the number of mols of solvent.

There are two common methods available for measuring the lowering of vapor pressure, the "air saturation" method and that of Menzies. In the former, dry air (or other gas) is simultaneously bubbled through pure solvent and solution held at the same temperature, and the vapor pressure of each is determined by analysis of the gas as it leaves the system. This method is probably more exact than the one about to be described, but the time required for its completion is considerably longer.

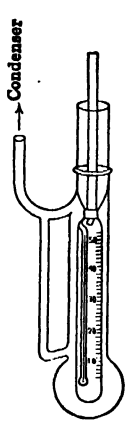

FIG. 18

Menzies' apparatus is shown in Fig. 18. It consists of an outer jacket in which pure solvent is boiled. The vapor of the solvent surrounds an inner chamber, closed at the top by a ground-glass plug; the inner chamber communicates with the outer by means of a small glass tube which serves as a manometer. The lowering of the vapor pressure is read on this manometer arm, which is usually calibrated in millimeters.

Apparatus and Chemicals Required

Menzies' apparatus, connected to a short condenser by means of a short length of soft rubber tubing, iron stand, ring and two large clamps, pinchcock, microburner, and burner shield.
Solvent (CCl_4 recommended), small bottles containing solutes for investigation.

Method of Procedure

If CCl_4 is used as solvent, it is highly important that it be entirely free from traces of water, and that the apparatus and samples of solute be absolutely dry. Do not wash the apparatus with water after finishing the experiment.

The inner vessel is usually calibrated in milliliters. It is advisable to check these calibrations. Ordinarily it will be necessary to calibrate the vessel for volume, noting liquid heights on the millimeter scale of the small manometer tube. This calibration is readily made by running the solvent in from a burette, and noting volumes added and liquid levels in the vessel.

After the inner tube has been calibrated, half fill the bulb of the outer tube with solvent, assemble the apparatus, and place about 5 ml. of solvent in the inner vessel. Light the burner and adjust the flame in such a manner that the vapor is completely condensed in the lower 2 in. of the condenser.

It is necessary to expel all the air from the inner tube. This is done by lifting the ground-glass stopper with the right hand and simultaneously pinching off the rubber tube between the apparatus and the condenser with the left. This causes the vapor to bubble through the inner vessel and to escape at the top, driving the air ahead of it. This sweeping-out action is stopped by first dropping the plug into its seat, and an instant later releasing the restriction in the rubber tube.

It may be necessary to repeat this sweeping-out procedure several times before the air is all removed from the inner chamber. In general, satisfactory results have been obtained when the liquid rises to the same height in the manometer tube as it would be raised by capillarity. Record this height (above the liquid in the vessel) as the initial height for the apparatus.

With approximately 15 ml. of solvent in the inner chamber, weigh about 0.2 g. of carefully dried solute accurately, and dissolve it in this liquid. Sweep the air out several times, and allow the system to come to thermal equilibrium. This is important, because passing vapor of the solvent through the solution causes the latter to boil, and its boiling point is higher than that of the pure solvent. The success of the experiment requires that the difference between the vapor pressure of the solution and that of the solvent be determined at the same temperature, i.e., at the boiling point of the solvent. Hence it is necessary to allow the solution to cool to the temperature of the boiling solvent after each "sweeping-out" procedure.

Record the volume of solution within the vessel and the depression in the manometer tube.

Make similar observations on two additional solutions, adding approximately the same amount of solute each time.

At the close of the experiment, rinse the apparatus with solvent (not water), pouring solutions and wash liquid into the "residue jar."

Read the barometer at the start and finish of the experiment.

Obviously, the barometric pressure is p in Raoult's formula; and the depression, converted to millimeters of mercury, is $p - p'$.

Calculations

1. Calculate the weight of solvent in the inner vessel for each trial.
2. Calculate the lowering of the vapor pressure for each solution.
3. Calculate the molecular weight of the solute.

EXPERIMENT 17

DISTILLATION WITH STEAM

Object

To illustrate the principle of steam distillation, and to show that the molecular weight of the less volatile constituent can be determined from the partial pressures of the distilling vapors and the weights of the liquids obtained in the distillate.

Discussion

Steam distillation is very commonly employed in synthetic chemistry and in chemical technology for separating and purifying high-boiling liquids at temperatures considerably below their boiling points. The process is most successful when the liquid being distilled is nonmiscible with water.

The principle involved is the well-known fact that the total pressure exerted by the vapor of a system composed of two nonmiscible liquids is equal to the sum of the partial pressures of the individual liquids.

If the liquids are truly nonmiscible, there will be a fixed relationship between the respective masses which distil over, as long as there is enough of each of them present to maintain the equilibrium.

By applying the theory of partial pressures to the distillation, it may be shown that

$$\frac{W_A}{W_B} = \frac{p_A M_A}{p_B M_B}$$

where W_A and W_B represent the weight of each liquid distilling over in a given time,
p_A and p_B the respective partial pressures at the temperature of the distillation,
M_A and M_B the molecular weights of the liquids in the vapor state.

It is apparent that the method may be used to determine molecular weights of liquids which are not miscible with water. One distils the liquid whose molecular weight is to be determined with steam, collects samples of the distillate, and determines the weights of each of the liquids collected. The temperature and pressure are noted. By reference to a table of vapor pressures for water, the partial pressure of water vapor is obtained, and this, subtracted from the atmospheric pressure gives the partial pressure of the vapor of the liquid whose molecular weight is sought.

Apparatus and Chemicals Required

Steam generator, 1-liter round-bottom flask, still head, condenser, three 100-ml. graduates, one 10-ml. pipette, thermometer (70–120°, in tenths), tripod, 2 iron stands, ring, 2 clamps, 2 burners, corks, rubber tubing; separatory funnel.

Chlorobenzene, bromobenzene, nitrobenzene, or toluene for investigation.

Fig. 19 represents the apparatus used for steam distillation. A round-bottom flask inclined at an angle is supported on an iron ring and closed by a two-hole cork. Through one hole passes a glass tube bent downward so as to reach within 0.5 cm. of the bottom of the flask, while the other hole bears the still head which connects the flask to the condenser. A thermometer reading to tenths of a degree is inserted in the still head. Steam is generated in the metal can on the left. This can is provided with a safety tube which reaches to the bottom and extends about 40 cm. above the top.

Method of Procedure

It is desirable to calibrate each of the 100-ml. graduates used for collecting samples. The calibration required is twofold: (a) for accuracy of graduation and (b) for meniscus correction.

The three graduates should be marked *A*, *B*, and *C*. Accuracy of graduation is determined by successively adding 10-ml. portions of water and noting the reading each time.

The meniscus correction is obtained by running in, say, 30 ml. of water, adding 10 ml. of the organic liquid to be used in the experiment, and reading the position of the two menisci.

From the above data, corrections may be obtained which will enable one to determine the true volume of each liquid present at any time.

Half fill the steam generator with water, close the neck by the one-hole cork carrying the safety tube, and connect the steam outlet pipe with the round-bottom flask.

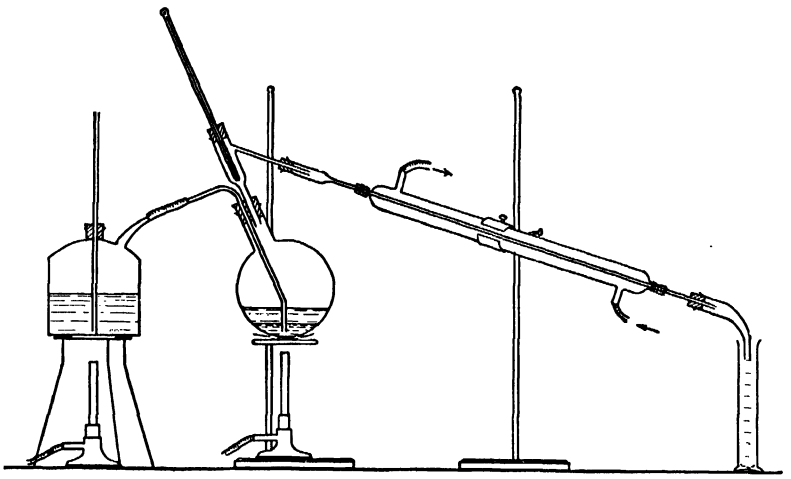

FIG. 19

Place 300 ml. of the organic liquid to be used in the flask together with 25 ml. of water, make all connections tight, and see that cold tap water is running through the condenser.

Heat both the can and the flask, the latter by means of a *low* flame which may be removed as soon as the flask is thoroughly heated and the steam no longer condenses in it.

In order to prevent the partial condensation of vapor in the neck of the flask and the still head, wrap a piece of cloth around these parts.

Record the barometric pressure and the room temperature at the beginning and the end of the experiment.

Collect the first 10 to 20 ml. of the distillate separately in an Erlenmeyer flask and, as soon as the distillate comes over regularly, collect three 100-ml. samples in the graduated cylinders. Watch the temperature carefully during the time of sample taking and record the same every minute, for the distillation should be carried out at constant temperature. This will be the case as long as the steam bubbles through the organic liquid at a uniform rate.

In case the distillates do not separate into two distinct layers at once, it will be necessary to allow them to stand until the next laboratory period before reading the volumes. Inform the instructor if it is necessary to do this.

Disconnect the round-bottom flask, cool, and empty its contents into the separatory funnel. Replace the empty flask and pass steam through it, recording one-minute temperature readings until five consecutive constant observations are obtained. If you know the correct barometric pressure, a correction for the boiling points of pure water and the mixture can be applied.

Turn off both gas and water before leaving the laboratory.

Calculations

1. Prepare a calibration curve for each of the graduates used for collecting distillate.
2. Calculate the weight of each liquid collected (see Table 6 in the Appendix).
3. Determine the vapor pressure of water and of the organic liquid, at the true boiling point of the mixture.
4. Calculate the molecular weight of the liquid distilled.

EXPERIMENT 18

DISTRIBUTION OF A SUBSTANCE BETWEEN TWO NONMISCIBLE LIQUIDS

Object

To determine the partition of benzoic acid between water and benzene, and to test the validity of Nernst's distribution law for this case.

Discussion

When a solute is shaken with two nonmiscible solvents—if it is soluble in each of them—it will distribute itself between the two in accordance with Nernst's distribution law. If the solute is neither associated nor dissociated in either solvent, the partition will take place in accordance with the degree of solubility of the solute in each solvent as follows:

$$K = \frac{C_1}{C_2}$$

where K is the partition coefficient and C_1 and C_2 refer to the solubility of the solute in the respective solvents.

If the solute is associated in one of the solvents, say solvent No. 2, and is normal in the other, the formula is modified as follows:

$$K = \frac{C_1^n}{C_2}$$

where n is the degree of association, in the second solvent.

In investigating the distribution law, a number of systems may be studied. When succinic acid distributes itself between ether and water, it is found that the solute is normal in both liquids. When benzoic acid distributes itself between water and benzene, the solute is associated in one of the solvents. Many more possibilities are available.

Apparatus and Chemicals Required

Three 150-ml. separatory funnels, two 125-ml. Erlenmeyer flasks, one 5-ml. and one 2-ml. pipette, 25-ml. graduate, iron stand with three rings to hold separatory funnels, tripod, Bunsen burner, stock bottle containing approximately 0.05 N baryta solution connected to a 25-ml. burette, bottle and burette being fitted with guard tubes.

Bottles containing CO_2-free water, benzene, and benzoic acid, phenolphthalein indicator.

Method of Procedure

Place 25 ml. of CO_2-free water and 25 ml. of benzene in each of the three separatory funnels and introduce 1.1, 1.5, and 1.9 g. of benzoic acid, respectively, into the numbered funnels.

Stopper at once and shake for 15 minutes, holding the funnels by the stem and neck in such a manner that the mixture is not warmed by the hands.

Place the separatory funnels in their supporting rings and allow the mixture to separate into two perfectly clear layers.

Analyze the upper (benzene) layer in each of the funnels as follows, taking care not to warm the liquids:

Place 25 ml. of CO_2-free water and a drop of phenolphthalein in each of the two 125-ml. Erlenmeyer flasks. By means of the 2-ml. pipette withdraw and discard a sample from the upper layer in funnel No. 1, then place exactly 2 ml. of this liquid in each of the Erlenmeyer flasks.

Heat these solutions to boiling and titrate at once with 0.05 N baryta solution, being careful

not to overrun the end-point. Should the two titrations not check to 0.05 ml., take further samples and repeat the titrations.

Having analyzed the upper layer in funnel No. 1, analyze those in the other two funnels in like manner.

Carefully draw about 17 ml. of the lower (aqueous) layer from funnel No. 1, running it into the *dry* graduated cylinder. Rinse the 5-ml. pipette with this solution, then run exactly 5 ml. into each of the Erlenmeyer flasks, add 20 ml. of CO_2-free water and a drop of phenolphthalein to each, heat to boiling, and titrate with baryta solution.

After having obtained satisfactory "checks" (to 0.05 ml.), dry the measuring cylinder and proceed to the analysis of the aqueous layers in the other two funnels.

Before leaving the laboratory, see that the solutions are drained from the separatory funnels. Remove the stopcocks and leave the funnels supported in their rings so that they will drain and dry before the next laboratory period.

Calculations

1. Express the numerical values of the ratio C_W/C_B for the three solutions and see whether a constant value is obtained or not. If not, what conclusion can be drawn?

2. Calculate the ratios: C_W/C_B^2 and C_W^2/C_B. If either of these is constant what inference can be drawn?

EXPERIMENT 19

BOILING POINTS OF BINARY SYSTEMS (MINIMUM BOILING LIQUIDS)

Object

To determine the boiling-point composition curve for a pair of miscible liquids evidencing a minimum boiling point.

Discussion

The boiling points of binary systems of consolute liquids may fall in one of three possible classes:

(a) The boiling-point composition curve lies between the boiling points of the pure constituents.

(b) It drops below the boiling point of either pure constituent.

(c) It rises higher than the boiling point of either pure constituent.

In this experiment, we are dealing with type (b). The boiling points of pure methyl alcohol, pure benzene, and of various known mixtures of the two are determined, and a curve is plotted from these data.

Apparatus and Chemicals Required

Three-necked boiling-point vessel (or a 500-ml. "Pyrex" 3-necked distilling flask), condenser, thermometer, iron stand, tripod, ring, and clamp, 50-ml. graduate, burner and tubing.

Methyl alcohol, benzene.

Fig. 20 gives a sketch of the assembled apparatus. The three-necked boiling-point vessel is supported on the wire gauze by means of the perforated asbestos plate (laid on the iron ring) and connected airtight to the reflux water cooler on the right. The central opening of the vessel is closed by a tight-fitting cork carrying a thermometer.

Method of Procedure

Since both benzene and methyl alcohol are highly inflammable it is necessary to insure airtight connections, especially at the one-hole cork connecting the boiling-point vessel to the condenser.

Regulate the flow of tap water through the condenser. Pour 50 ml. of benzene measured in the 50-ml. graduate, through the side neck on the left.

Close the neck and determine the boiling point of the liquid. In this and *all* following determinations, the bulb of the thermometer should dip *in the liquid* and the thermometer should be of such length that the cork does not interfere with readings above 55°.

Record the barometric pressure and room temperature.

Having obtained the boiling point, turn off the gas, wait a few minutes until the liquid has sufficiently cooled, and introduce 10 ml. of methyl alcohol through the side neck.

Close the neck and determine the boiling point of this mixture. (Shake gently until the alcohol has dissolved.)

Repeat the operation twice by adding successively 20 and 30 ml. of methyl alcohol.

Disconnect the flask from the condenser and transfer the solution to the waste bottle. Rinse the flask with about 10 ml. of methyl alcohol and, after assembling the apparatus as before, introduce 50 ml. of methyl alcohol and determine its boiling point.

Repeat the boiling-point determination three times by adding successively 10, 20 and 25 ml. of benzene.

Turn off both the gas and water supply and pour the contents of the flask into the waste bottle. Do not rinse the boiling-point vessel with water.

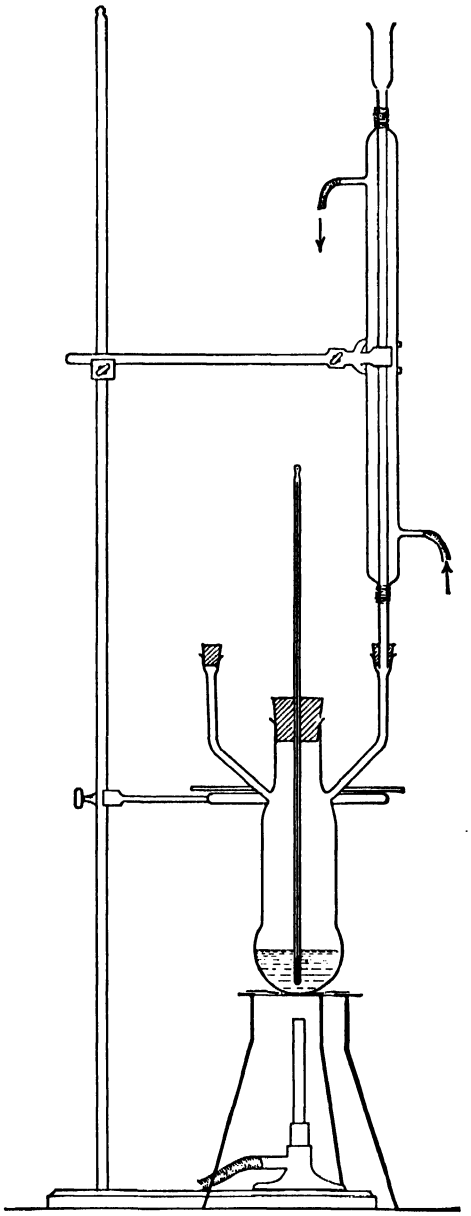

FIG. 20

Calculations

1. Compute the volumes of alcohol and benzene for each mixture, on the basis of a total volume of 100 ml.

2. Prepare a temperature-concentration diagram by plotting the temperature as ordinate against concentration by volume as abscissa.

3. Construct a smooth curve through these 8 points, designated as P_1, P_2, etc., and locate the minimum on the curve.

4. Construct a second curve, plotting boiling point against mol fraction.

EXPERIMENT 20

BOILING POINTS OF BINARY SYSTEMS. SIWOLOBOFF'S METHOD

Object

To determine the boiling-point concentration curve for a binary system.

Discussion

The method proposed by Siwoloboff [1] is particularly well adapted for the determination of boiling points of small samples of pure liquids and of mixtures. The open end of a short capillary tube (sealed at the other end) is immersed in the liquid under observation. This tube serves as a manometer to enable one to determine the temperature at which the vapor pressure of the liquid is equal to the pressure of the atmosphere.

Apparatus and Chemicals Required

Pyrex test tube (50 × 400 mm.) for outer jacket, inner tube (10 × 450 mm.) having a thin-walled bulb (20 to 25 mm. diameter) blown at one end, five or six capillary tubes 30 mm. long and sealed at one end, 1-ml. pipette, thermometer, stirrer, iron stand and clamp, burner.

Benzene-toluene, chloroform-acetone, chloroform-methanol samples in the following proportions by weight: 0–100, 20–80, 50–50, 80–20, and 100–0.

The assembled apparatus is shown in Fig. 21.

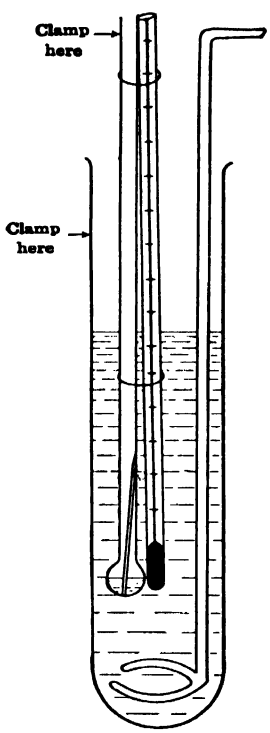

Fig. 21

Method of Procedure

Fill the large test tube two-thirds full of water (use water-glycerol if the boiling points to be determined are above 100°), fix it in the clamp, and place the stirrer in position.

Dry the sample tube and fill its bulb half full of liquid *A*.

Insert the capillary tube in the sample tube with its open end down. Attach the thermometer to the sample tube with rubber bands, taking care that the mercury bulb is at the same level as the bulb of the sample tube. Suspend them in the large test tube as shown in Fig. 21.

While stirring constantly, warm the jacket throughout by playing a moderate flame over its entire surface; place the burner underneath the tube and closely watch the capillary tube. As the temperature rises in the sample tube, bubbles of air escape from the lower end of the capillary. When the boiling point of the sample is slightly exceeded, a rapid stream of bubbles or vapor escapes. As soon as this is observed, withdraw the flame and allow the bath to cool. Stir constantly. When bubbles no longer issue from the capillary and the liquid starts to suck back, read and record the boiling point.

When the bath has cooled sufficiently, repeat the experiment with the 20–80, the 50–50, the 80–20, and finally the 100–0 samples. Duplicate runs should be made of the 20–80, 50–50, and 80–20 samples since the compositions may have been unduly altered by boiling.

At the conclusion of the experiment, clamp the sample tube in an inverted position and allow it to drain.

Plotting the Results

1. Plot temperature against weight concentration. Use the second boiling point obtained for the intermediate samples. Indicate which of the three types of curves is found.

2. Plot temperature against mol per cent (mol fraction times one hundred).

[1] *Ber.*, **19**, 795 (1886); O'Dowd and Perkin, *Trans. Far. Soc.*, **4**, 95 (1908); Denslow, *J. Chem. Educ.*, **5**, 727 (1928).

EXPERIMENT 21

BOILING POINT-VAPOR COMPOSITION CURVES

Object

To determine the boiling-point curve and the corresponding vapor-composition curve for a binary system of consolute liquids.

Discussion

When a binary liquid system is distilled, the composition of the distillate is in some cases the same as that of the liquid left in the distilling flask; we then speak of an "azeotropic" system, but ordinarily the distillate is richer in one component than the mother liquor.

Among the cases frequently met with in systems containing *water* as one of the components are those where a *maximum* boiling point occurs. Such systems are formed, for example, by the liquid pairs H_2O—HNO_3, H_2O—HCl, H_2O—HBr, H_2O—HI, H_2O—HF, and H_2O—HCOOH. For laboratory exercises, the systems H_2O—HCl and H_2O—HCOOH [1] have been most commonly used. The latter has some advantages, as the azeotropic composition (77.3 per cent acid at 107.38° and 760 mm.) can be approached from both the water and the acid side. For reasons of economy and safety it is preferable to use water and HCl, although the maximum boiling point cannot be well approached from the side of the highly concentrated solutions (25 per cent HCl or more) on account of the escape of hydrochloric acid fumes. The composition of the azeotropic solution varies somewhat with the atmospheric pressure, as is evident from the following table:

Pressure, mm.	Per Cent HCl	Maximum Boiling Point
780	20.18	109.29
770	20.20	108.93
760	20.22	108.58
750	20.24	108.22
740	20.27	107.86

With the aid of an equilibrium still, it is possible to reach the maximum boiling point and even to exceed the composition of the maximum, by starting from pure water.

The method as employed by various authors [2] consists in boiling a sample of liquid in a suitable distilling apparatus and removing the vapor by total condensation in a receiver from which the overflow returns continuously to the still.

Apparatus and Chemicals Required

All-glass 500-ml. distilling flask,[3] with ground-in glass stopper, thermometer (75–125° in tenths), condenser, 20-ml. collecting bulb, and 3-way stopcock, as sketched in Fig. 22, iron stand and clamps, and fasteners, rubber tubing, wire gauze, burner, test tube rack with labeled test tubes, rubber stoppers, pumice, Westphal balance, one 25-ml. and one 50-ml. graduated cylinder, bath with water at 15°.

Bottles with distilled water, and concentrated HCl solution.

[1] Cf. A. A. Vernon, *J. Chem. Educ.*, **16**, 20 (1939).

[2] Othmer, *Ind. Eng. Chem.*, **20**, 743 (1928); Carey and Lewis, *Ind. Eng. Chem.*, **24**, 882 (1932); Scheeline and Gilliland, *Ind. Eng. Chem.*, **31**, 1050 (1939); Schutz, *J. Am. Chem. Soc.*, **61**, 2693 (1939).

[3] This apparatus may be purchased complete from firms specializing in the manufacture of special glassware, or it may be constructed from standard pieces of laboratory glassware by anyone possessing a reasonable amount of glass-blowing skill.

Method of Procedure

About 300 ml. of distilled water are placed in the distilling flask, together with a few pieces of pumice to prevent bumping. The 3-way stopcock is closed and the water is brought to boiling. The boiling temperature and the barometric pressure are recorded and the thermometer correction determined, after reference to Table 2 in the Appendix.

The distillate collected in the bulb is then returned to the flask, and about 45 ml. of concentrated HCl are added through the inlet tube on the left. With the stopcock in the closed position,

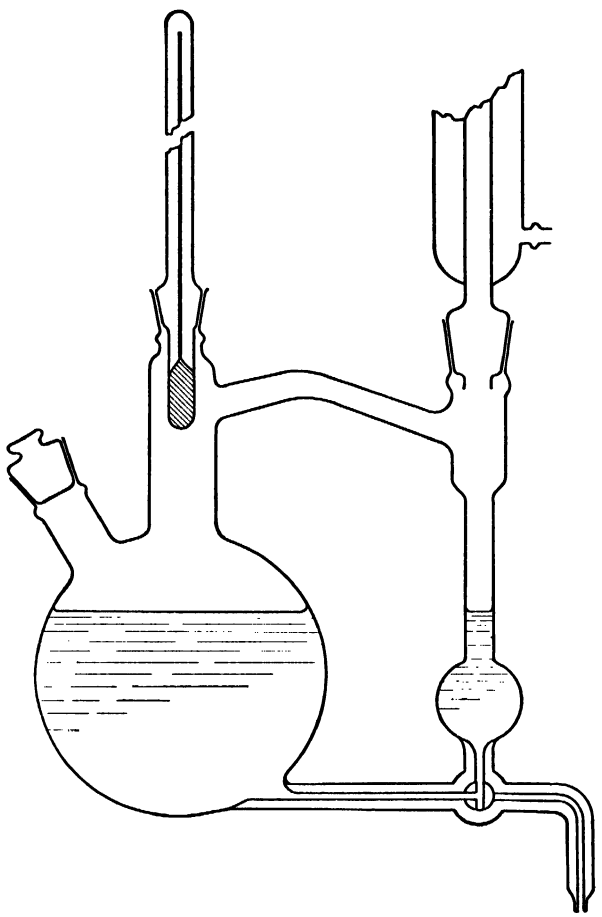

FIG. 22

distillation is continued until the liquid in the receiver is at the same level as the liquid in the flask. The stopcock is then turned to the position which connects the bulb with the flask, and distillation is continued until the boiling point *becomes constant*, the distillate being returned to the flask as fast as it is collected in the receiver (about 5 minutes are required for equilibrium to become established).

The temperature is now recorded, the stopcock is turned to the position for withdrawing samples from the collecting bulb, and, after rejecting the first 4 or 5 ml. of distillate, about 20 ml. are collected and placed in a test tube marked D_1. This is securely stoppered with a rubber stopper and placed in the 15° temperature bath.

The stopcock is then turned to the position for withdrawing samples from the distilling flask and, after discarding 4 or 5 ml. of the mother liquor from the flask, a 20-ml. sample is collected in a test tube marked R_1, the tube is securely stoppered and placed in the 15° temperature bath.

The flame is then removed and about 50 ml. of concentrated HCl are added to the distilling flask, and the procedure described above is repeated, the temperature at equilibrium being noted, the sample of distillate being placed in a tube marked D_2, and the sample from the flask in a tube marked R_2.

This whole process is again repeated five or six times, until the boiling temperature has passed its maximum, and has dropped to 108° or less, when the experiment is discontinued in order to avoid the escape of HCl fumes into the laboratory.

Specific gravity determinations may be carried out by means of the Westphal balance.

The specific gravity readings are changed to percentages of acid with the aid of Table 11 of the Appendix.

In the case formic acid is employed instead of hydrochloric acid, Table 12 is used to convert specific gravities into percentages.

Plotting the Results

The data obtained are plotted on a sufficiently large scale (percentages as abscissas, temperatures as ordinates), and the composition of the azeotropic solution is determined from the graph.

EXPERIMENT 22

PARTIALLY MISCIBLE LIQUIDS. DETERMINATION OF MUTUAL SOLUBILITY

Object

To construct the mutual solubility curve for a pair of partially miscible liquids and to determine their critical solution temperature.

Discussion

A given pair of liquids may be (a) completely miscible, (b) nonmiscible, or (c) partially miscible, at any given temperature. Inasmuch as solubility varies widely with temperature, it may happen that a pair of liquids which are completely miscible at one temperature may become partially miscible at another, or vice versa.

The system phenol-water furnishes an excellent example of this. Phenol and water are partially miscible at ordinary temperatures but, as the temperature is raised, the mutual solubility is increased. Phenol becomes then more soluble in water, and water becomes more soluble in phenol. When a temperature somewhere between 65 and 70° is attained, the liquids become completely miscible. The temperature at which this happens is known as the critical solution temperature.

There are several methods available for determining the mutual solubility curve for such a pair of liquids. In the one which will be used in this investigation, a number of mixtures of known concentration of the two liquids are prepared, and the saturation temperature for each is determined.

Apparatus and Chemicals Required

Freezing-point tube, jacket for same, thermometer 0–100° in $\frac{1}{5}$°, glass stirrer, corks, one 2-liter beaker, one 50-ml. burette and holder, burner, tripod, wire gauze, iron stand and clamp, one 250-ml. Erlenmeyer flask, one 10-ml. pipette.

Phenol solution containing 88 per cent by weight of phenol, (specific gravity, 1.0564).

The assembled apparatus is shown in Fig. 23.

Method of Procedure

With the aid of a 10-ml. pipette, to which a rubber tube and glass tip are attached, remove exactly 10 ml. of liquefied phenol from the stock bottle and place this amount in the inner tube of the apparatus.

Calculate and then add from the burette the amount of water required to bring the composition of the system to 70 per cent phenol, 30 per cent water.

Warm the tube until the two layers merge into one, and then place it in the apparatus. Allow it to cool slowly, stirring the liquid vigorously as it cools. Note the exact temperature at which a second liquid phase appears. This will be evidenced by a milky appearance of the liquid.

After a second layer has appeared *on cooling*, slowly warm the system, stirring constantly, and note the temperature at which the liquid clears up.

The temperature found on heating should approximate that found on cooling. With careful work, they will be found to approach each other closely. The mean is taken as the temperature of saturation.

Now add the required volume of distilled water to prepare a 60 per cent mixture and find its saturation temperature.

Prepare 50, 40, 30, 20, and 10 per cent solutions and find the saturation temperature for each.

In making the last few solutions, it will be necessary to pour the mixture from the freezing-point tube into a 250-ml. Erlenmeyer flask and add the water to this; otherwise the volume of the tube will not be sufficient to hold the entire mixture. It will then be necessary to pour the

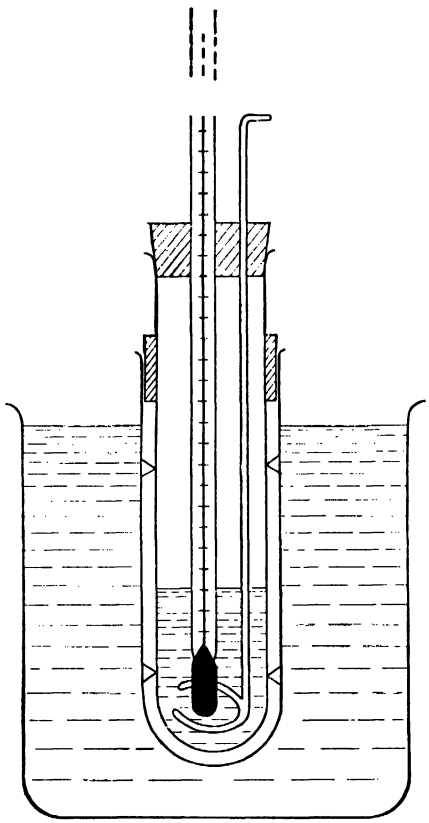

FIG. 23

mixture back and forth from the flask to the tube several times in order to secure a uniform sample.

Plotting the Results

Plot the curve of mutual solubilities, temperature against weight concentration, and designate the critical solution temperature.

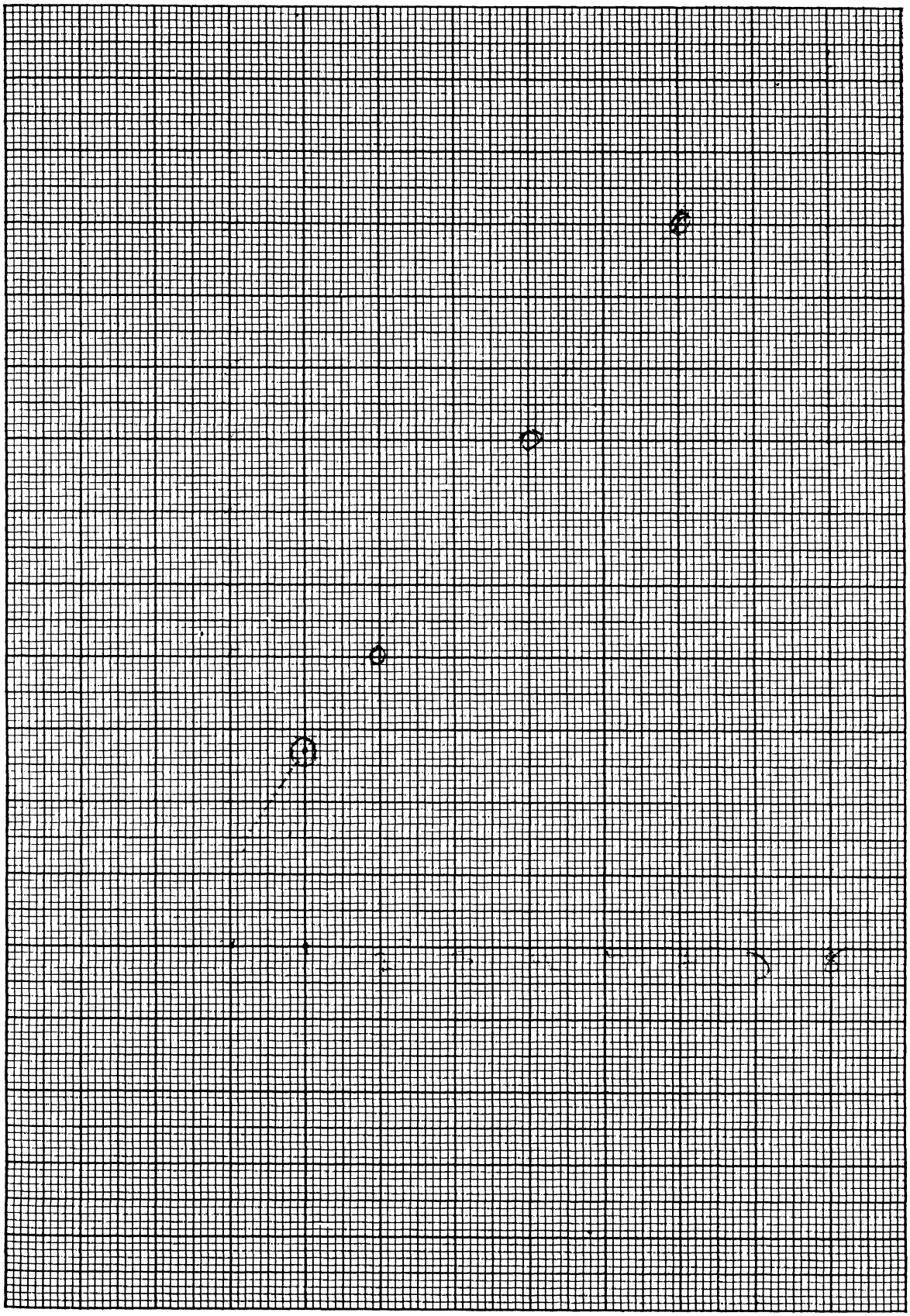

EXPERIMENT 23

SOLUBILITY CURVE FOR A TERNARY SYSTEM OF LIQUIDS

Object

To determine the solubility curve for a ternary system of two nonmiscible liquids and a third liquid which is miscible with each of them.

Discussion

If a given liquid A is miscible with each of the two liquids B and C, B and C being immiscible, it is possible to cause B and C to become mutually miscible by adding different quantities of A to them.

The amount of A needed to cause B and C to become completely miscible is very definite for given concentrations of B and C. When the quantities of A required to render any composition of B–C consolute are determined and plotted on a triangular diagram, the curve obtained shows at once under what conditions the three components will form, at the stated temperature, a one- or a two-phase system.

Apparatus and Chemicals Required

One 250-ml. and one 500-ml. Erlenmeyer flask, one 2-ml. and one 5-ml. pipette, 4 burettes and holders.
Distilled water, benzene (or nitrobenzene [1]) and glacial acetic acid.

Method of Procedure

(*Student A.*) Using the 5-ml. pipette, introduce 5 ml. of benzene into the 250-ml. Erlenmeyer flask, then add 1 ml. of water from one burette and from another burette add glacial acetic acid slowly, until after vigorous shaking a clear (noncloudy) solution is obtained which is saturated with respect to the three components.

Record the volumes added.

Add 2 ml. of water to the liquid, shake vigorously, and repeat the addition of acetic acid until the mixture again becomes homogeneous.

Add successively 3, then 4, 5, and finally 6 ml. of water, and in each case add enough acetic acid to produce a clear liquid. Record and tabulate all results.

In case nitrobenzene is used instead of benzene, pipette 10 ml. of nitrobenzene into the 250-ml. Erlenmeyer flask, add 3 ml. of water from one burette and acetic acid from the other burette until a clear solution is obtained.

Add 2 ml. of water to the solution and enough acetic acid to obtain a clear solution.

Again add successively 5, 10, 20, and 30 ml. of water and in each case enough acid to dissolve the droplets of nitrobenzene which tend to collect on the bottom of the flask.

(*Student B.*) By means of the 2-ml. pipette introduce 2 ml. of benzene into the 500-ml. Erlenmeyer flask. Add 25 ml. of water from one burette and then from a second add enough glacial acetic acid to produce a clear homogeneous liquid after shaking.

The operation is repeated by adding successively five more portions of 25 ml. of water; in each case the exact volume of acetic acid necessary to produce a clear, noncloudy solution is recorded.

When nitrobenzene is used as second liquid, place 2 ml. of this in a 250-ml. Erlenmeyer flask, add 5 ml. of water from one burette and enough acetic acid from the second burette to obtain a clear solution after rotating the flask vigorously.

[1] The combination water-nitrobenzene-acetic acid has certain advantages over the system water-benzene-acetic acid. Vernon and Brown, *J. Chem. Educ.* **14**, 143 (1937).

Now add 5 ml. of water, repeat the procedure, and record the required amount of acid.

Four more additions of water are made of 10, 20, 30, and 50 ml. respectively, and in each case enough acetic acid is added to homogenize the mixture.

Record and tabulate all results.

Calculations

1. Assuming that there is no volume change on mixing, compute the volumes of the three components in equilibrium on the basis of having in each case a total volume of 100 ml.

2. Make an estimate of the errors involved in reading volumes on the burettes and express the errors in individual measurements and the worst possible cumulative errors in volume per cent.

3. Plot the percentages on a triangular diagram, indicating the points by A_1, A_2, . . ., and B_1, B_2, etc. Connect the twelve points by a smooth curve which is prolonged by a dotted line ending in the vertices of the triangle on the assumption that water and benzene (or water and nitrobenzene) are completely immiscible at room temperature.

4. Recalculate the results for the two immiscible components in terms of 100 ml. of acetic acid used in each case and plot these data on ordinary cross-section paper.

EXPERIMENT 24

PHASE DIAGRAM FOR A TWO-COMPONENT SYSTEM OF METALS

Object

To construct the phase diagram for a simple binary alloy from cooling-curve data.

Discussion

It is entirely possible to grasp the fundamental principles of phase diagram work by investigating the thermal characteristics of a low-melting alloy system by means of ordinary thermometers.

For this purpose the system tin-lead or the system cadmium-bismuth may be used.

The student determines the freezing point of each of the pure metals by means of cooling curves and locates the temperature of initial solidification and that of final solidification for various mixtures of the two metals in the same manner. The temperature of initial solidification for a mixture is indicated by a sudden change in the slope of the cooling curve, and the temperature of final solidification by a horizontal portion in the cooling curve. The eutectic mixture behaves like a pure metal.

After the cooling curves have been obtained, the points of initial and final solidification are used to plot the phase diagram for the system, the composition of each of the mixtures being known.

Apparatus and Chemicals Required

Two iron stands, 2 iron rings (for holding the crucibles), 2 burners, 2 clamps, two 360° thermometers, 6 numbered Battersea crucibles, size D (6 cm. dia. by 10 cm. long), metallic cadmium, metallic bismuth, asbestos sheet.

Crucible 1 should contain: 200 g. of cadmium.
Crucible 2 should contain: 160 g. of cadmium, 40 g. of bismuth.
Crucible 3 should contain: 120 g. of cadmium, 80 g. of bismuth.
Crucible 4 should contain: 80 g. of cadmium, 120 g. of bismuth.
Crucible 5 should contain: 40 g. of cadmium, 160 g. of bismuth.
Crucible 6 should contain: 200 g. of bismuth.

One unit of the apparatus is shown in Fig. 24. The metal or alloy under observation is placed in a Battersea crucible and covered with a thin layer of charcoal to prevent oxidation. The crucible is supported in an iron ring and heated over a Bunsen burner. The thermometer, covered at the top with a piece of heavy rubber tubing, moves freely through a perforated cork held by a clamp and sinks by its own weight in the metal (or alloy) as soon as the latter fuses.

Method of Procedure

Student A confines his observations to samples 1, 2, and 3; student B to samples 6, 5, and 4.

Barely melt the metal in crucible 1(6) and see that the bulb of the thermometer is immersed in the center of the molten metal. Be careful that the mercury does not rise above 360°. If it does tend to rise above this limit, immediately withdraw the thermometer and do not return it to the melt until the temperature has fallen to below 360°.

Carelessness on the part of the student sometimes results in breakage of the thermometer bulb as soon as the temperature exceeds 360°, with violent ejection of alloy when the boiling mercury escapes. It is advisable, therefore, to cover the crucible with a sheet of asbestos having a central aperture for the passage of the thermometer.

Remove the flame, allow the system to cool without interference of any kind (avoid air drafts!), and record temperature readings at 15-second intervals over the range 340–120°.

Again melt the metal, taking temperature readings from 130–330°. As soon as the thermometer

reaches the latter temperature, withdraw the thermometer and remove any metal adhering to the bulb with asbestos or glasswool.

In a similar manner obtain cooling (and heating) curve data for the alloys in crucibles 2 and 3 (5 and 4). In these cases take readings between the limits 320–120°, as the alloys fuse at a much lower temperature than the pure metals.

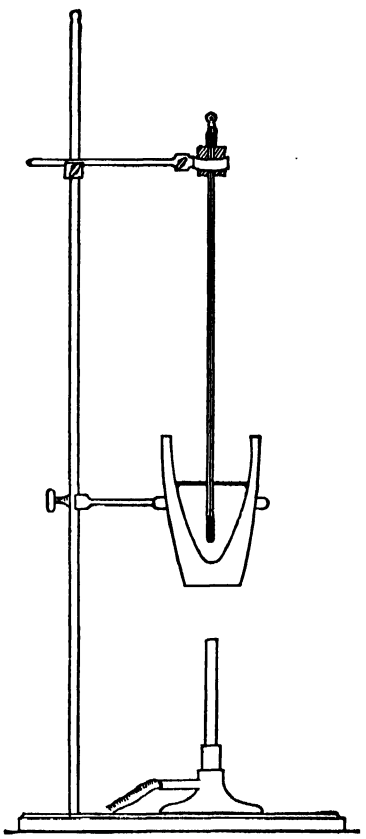

FIG. 24

Plotting the Results

1. Plot all three cooling curves on the same sheet of coordinate paper (temperature as ordinate against time as abscissa), by shifting the time axis successively 2 cm. to the right. Locate the temperature of initial and final (eutectic) solidification for each sample and unite these observations in a table giving for each of the six samples the exact composition and the temperatures of initial and eutectic solidification.

2. Use the data thus obtained for the construction of a complete temperature-composition diagram (plot temperatures vertically and compositions horizontally).

3. On a separate sheet plot the heating curves and see how the breaks in these curves check with those obtained from the cooling curves.

4. In case a metallographic microscope is available, observe the structures of the pure metals and of the four alloys, on polished and etched samples having the above indicated compositions.

Note: As an example of a binary system in which compound formation occurs, the system paratoluidine-α-naphthol may be employed in test tubes heated in a beaker filled with water. Ten 20-g. samples, including an equimolecular mixture of the two components are employed. Noting the temperature of initial solidification, a diagram with a maximum at 52° is readily found. [Cf. Vernon, *J. Chem. Educ.* **15**, 88 (1938).]

EXPERIMENT 25

FIRST ORDER REACTION: DECOMPOSITION OF HYDROGEN PEROXIDE

Object

To measure the velocity constant and the time of half decomposition for a first order reaction, the decomposition of hydrogen peroxide.

Discussion

Reactions may be classified according to the number of molecules taking part in the reaction, which determines their molecularity, or according to the number of molecules whose concentrations affect the rate of the reactions, which determines the order of the reaction.

Hydrogen peroxide decomposes according to the following stoichiometrical reaction:

$$H_2O_2 \rightarrow H_2O + \tfrac{1}{2}O_2$$

from which it would appear that the reaction is monomolecular. It has been shown, however, that this is not the case and that the reaction depends upon contact of the hydrogen peroxide molecules with the wall of the reaction chamber or with the molecules of catalyst. The reaction is of the first order, because the velocity is directly proportional the concentration of hydrogen peroxide and

$$-\frac{dc}{dt} = kc \qquad [1]$$

where c is the concentration of the hydrogen peroxide,
t is the time,
k is the velocity constant.

If a represents the initial concentration of hydrogen peroxide and x the amount which has decomposed during the time t, then $(a - x)$ represents the concentration of hydrogen peroxide at the time t. Equation 1 may be expressed as a function of a, x, and t, and may be integrated to give:

$$k = \frac{2.303}{t} \log \frac{a}{(a - x)} \qquad [2]$$

When the decomposition is half completed, the above equation simplifies to become:

$$k = \frac{2.303 \log 2}{t_{1/2}}$$

where $t_{1/2}$ is the "half time," or the time required for the concentration to reach half its initial value.

Apparatus and Chemicals Required

Thermostat (for ordinary use this may be dispensed with), 50-ml. burette and holder, iron stand, two 250-ml. Erlenmeyer flasks, one 10-ml. and one 5-ml. pipette, one 110-ml. sugar flask calibrated at the 100- and 110-ml. marks, one 150-ml. beaker.

Peroxide solution [1] and colloidal platinum,[2] 0.1 N $KMnO_4$ solution and dilute (1 : 4) sulfuric acid.

[1] Ordinary 3 per cent peroxide solution is unsatisfactory since it contains a preservative. The solution for investigation should be made by diluting superoxol. The solution should be diluted to such an extent that 10 ml. will require somewhat less than 50 ml. of the permanganate solution.

[2] It has been the experience in this laboratory that the most satisfactory method for preparing colloidal platinum for this experiment consists in reducing 0.01 per cent solution of $PtCl_4$ with carbon monoxide. The solution should be neutralized with potassium carbonate and should contain a trace of agar. Bubble washed carbon monoxide gas through this solution. A stable, colloidal platinum is obtained which usually must be diluted to prevent the peroxide from decomposing too quickly.

Method of Procedure

Pipette a 10-ml. sample of prepared hydrogen peroxide solution into an Erlenmeyer flask, add 5 ml. of dilute sulfuric acid, and titrate with permanganate. Check the titration and record the permanganate required as the "original" permanganate value.

Fill the sugar flask to the 100-ml. mark with the peroxide solution and then add colloidal platinum to the 110-ml. mark. Record the time and immediately transfer the contents of the flask to the other Erlenmeyer flask. Keep the solution stirred by shaking the flask. (If a thermostat is used, the permanganate solution and colloidal platinum should be at the temperature of the bath when they are mixed, and the Erlenmeyer reaction flask should be kept in the bath.)

The progress of the reaction is now followed by titrating 10-ml. samples at approximately 10-minute intervals. When about 9 minutes have elapsed, pipette a 10-ml. sample of the reaction mixture into the small Erlenmeyer, add 5 ml. of dilute sulfuric acid, and titrate rapidly with permanganate. Record the exact time at which the first drop of the permanganate is added. Inasmuch as the peroxide continues to decompose until all of it has reacted with permanganate, the titration should be continued as rapidly as possible. Record the volume of permanganate required.

Titrate successively 10-ml. samples of the reaction mixture at approximately 10-minute intervals until 8 samples have been analyzed. In each instance record the time and permanganate volumes as above.

Calculations

1. Since the total sample consists of 100 ml. of peroxide solution in a total volume of 110 ml., a 10-ml. sample would have a $KMnO_4$ value, at zero time, equal to 10/11 of the "original" $KMnO_4$ value. Compute and record this as the zero $KMnO_4$ value.
2. Plot the values of $(a - x)$ as ordinate against time in minutes as abscissa.
3. Select two representative points on the curve and calculate the velocity constant for each point.
4. From the curve, determine the exact time when one-half of the peroxide is decomposed.
5. From the integrated equation, compute the time $t_{1/2}$ when one-half of the peroxide is decomposed and compare the result with that obtained in 4.

EXPERIMENT 26

FIRST ORDER REACTION: INVERSION OF CANE SUGAR

Object

To determine the reaction velocity constant for the first order reaction: the inversion of cane sugar.

Discussion

The inversion of cane sugar furnishes an excellent reaction for investigation, owing to the fact that its progress may be followed optically. Solutions of sucrose rotate the plane of polarized light to the right, and equimolecular quantities of glucose and fructose, which are the inversion products, rotate it to the left.

At any instant, the ratio between the change in angular rotation which has been obtained and the total change which will be obtained when the reaction is completed is the same as that of the quantity of unchanged sucrose present at that instant, to the original amount.

The reaction for the inversion of sucrose is as follows:

$$\underset{\text{(sucrose)}}{C_{12}H_{22}O_{11}} + H_2O \rightarrow \underset{\text{(dextrose)}}{C_6H_{12}O_6} + \underset{\text{(levulose)}}{C_6H_{12}O_6}$$

The rate of the reaction depends upon the concentrations of sucrose and of water and also upon the concentration of hydrogen ion, which acts as catalyst. The concentration of water may be regarded as constant where a large excess is used and the hydrogen ion concentration remains unchanged during the reaction. Under these conditions, the reaction is first order with respect to sucrose.

If one designates the initial angular rotation as A_0, the final as A_∞, and the rotation at time t as A_t, then $(A_0 - A_\infty)$ is proportional to the original concentration of sucrose, and $(A_t - A_\infty)$ to the concentration of unchanged sucrose at time t.

Substituting these values in the integrated equation for a first order reaction:

$$k = \frac{2.303}{t} \log \frac{a}{a - x}$$

we obtain

$$k = \frac{2.303}{t} [\log (A_0 - A_\infty) - \log (A_t - A_\infty)]$$

For a description of the polarimeter, the student is referred to any standard textbook on physics or physical chemistry.

Apparatus and Chemicals Required

Polarimeter, with jacketed inversion tube, sodium light,[1] thermostat with pump for circulating constant temperature water through tube jacket, or a coiled copper tube 1 m. long by 5 mm.-bore, one 3-necked Woulff bottle carrying thermometer and water inlet and outlet tubes, iron stand, clamp, 2 burners, 25-ml. pipette, two 100-ml. beakers.

Normal HCl, 20 per cent sugar solution preserved by a tiny crystal of camphor.

[1] The commercial sodium vapor lamp, used for highway illumination, furnishes a most satisfactory source of sodium light in the physical chemistry laboratory.

The polarimeter (drawn schematically) and jacketed tube are shown in Fig. 25. Tap water is passed at a regulated rate through a coiled copper tube heated by a carefully regulated flame, next through a one-liter bottle containing the thermometer (not shown in the figure), then through the jacketed polarimeter tube, and thence to waste.

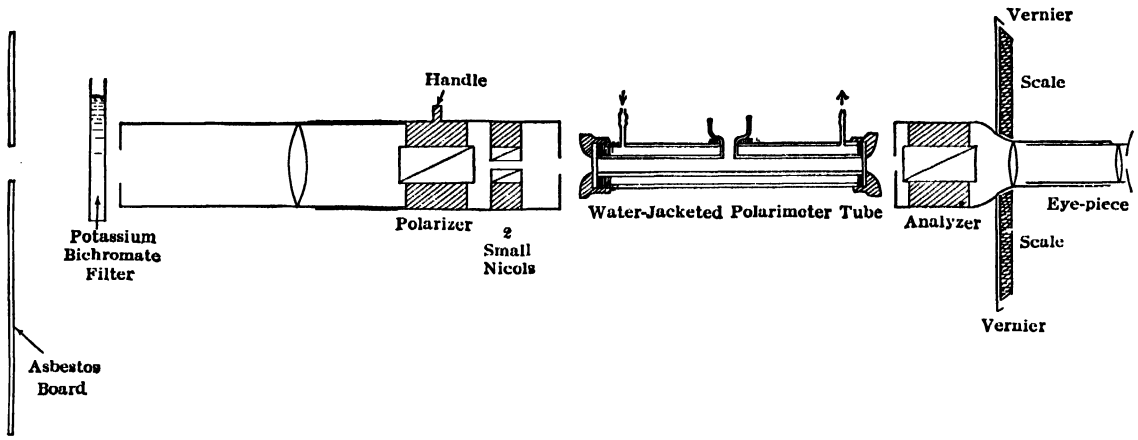

Fig. 25

Method of Procedure

Bring the water circulating through the jacketed tube to 30° and maintain it there by constant watching.

Dry the polarimeter tube.

Place the sodium lamp about 20 cm. from the polariscope, light the gas, remove the tube from its rack, and see that the polariscope is in adjustment.

Place 25 ml. of the 20 per cent sugar solution in one beaker and an equal volume (use pipette both times) of normal hydrochloric acid in the other. Bring the temperature of each to 30°, mix the solutions, and fill the polarimeter tube, taking care to eliminate any air bubbles which might tend to collect therein.

Place the tube in position and at once take a reading, noting the time at which the reading was taken.

For the first 20 minutes take one-minute readings, for the next 20, two-minute readings and for the next 60, five-minute readings on the polarimeter, recording also time (and temperature).

At the end of 100 minutes, raise the temperature of the circulating water to 65° and take one-minute readings until five successive constant values have been obtained; then bring the temperature back to 30° and continue to take one-minute readings until five consecutive constant values have again been obtained. At the temperature of 65° the reaction runs to completion quite rapidly and the values at 30° after complete inversion represent the value A_∞.

Calculations

1. Plot the observed angles (1° = 1 large division) against the times (5 min. = 1 large division) as abscissas and draw a smooth curve through the points.
2. Select four representative points on the curve and calculate the velocity constant for these points.
3. Calculate the half time from the average constant obtained in 2.
4. Check its value with that obtained from the curve.

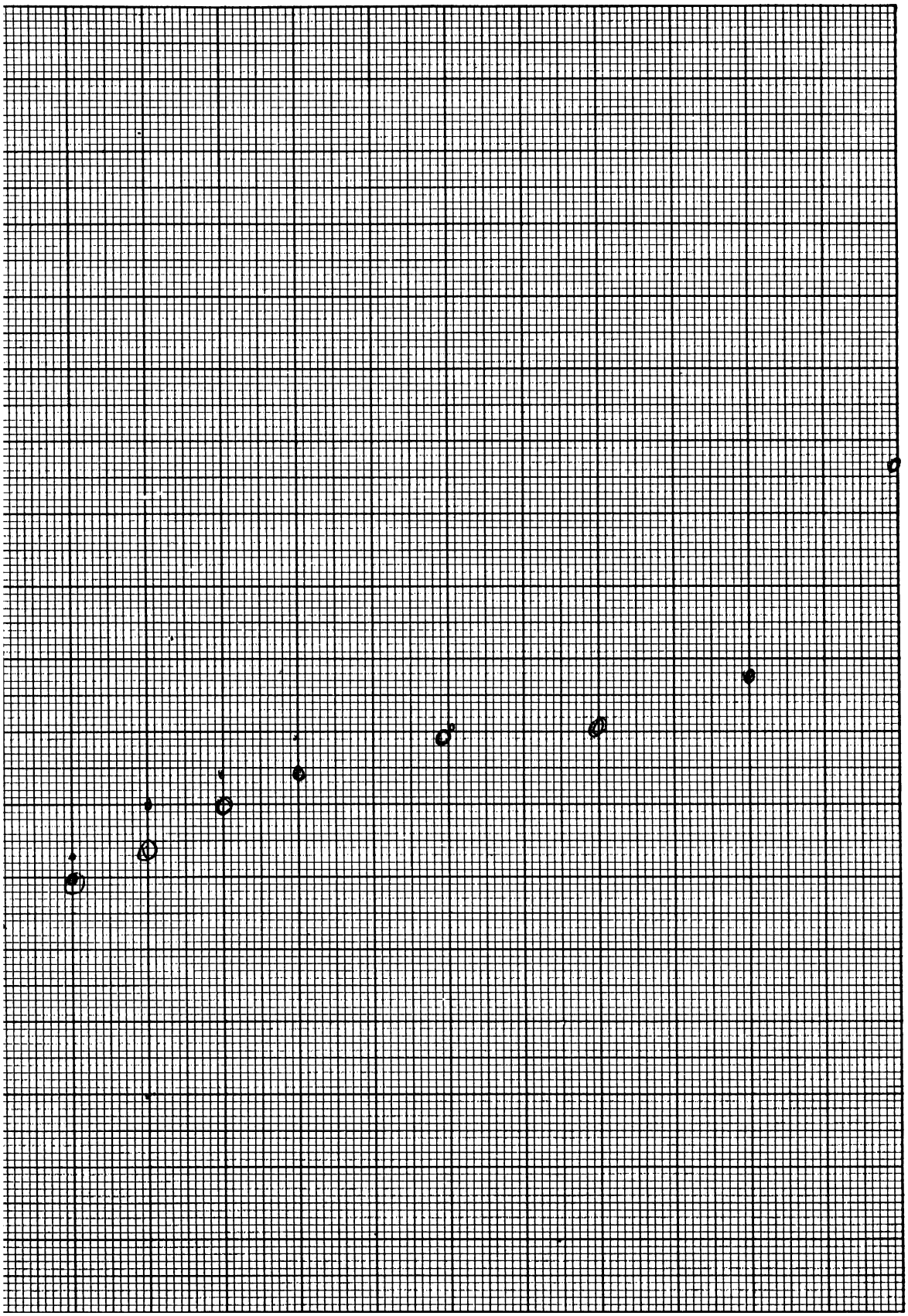

EXPERIMENT 27

SECOND ORDER REACTION: SODIUM THIOSULFATE REACTING WITH ETHYL BROMACETATE

Object

To determine the second order velocity constant for the bimolecular reaction:

$$CH_2BrCOOC_2H_5 + Na_2S_2O_3 = CH_2(NaS_2O_3)COOC_2H_5 + NaBr$$

Discussion

In a reaction of the second order, the concentrations of two substances undergo simultaneous change. The velocity equation for such a reaction is:

$$\frac{dx}{dt} = k(a - x)(b - x) \qquad [1]$$

which, on integration yields

$$k = \frac{2.3}{(a - b)t} \log \frac{(a - x)b}{(b - x)a} \qquad [2]$$

where k is the velocity constant,
a and b the initial concentrations of the reacting substances,
x the amount of each which has been consumed in time t.

If a and b were originally equal, the differential equation becomes

$$\frac{dx}{dt} = k(a - x)^2 \qquad [3]$$

and this, on integration, gives

$$k = \frac{1}{t} \cdot \frac{x}{a(a - x)} \qquad [4]$$

In following the reaction between sodium thiosulfate and ethyl bromacetate one should use such quantities of reagents that the thiosulfate is in excess. The initial concentration of ethyl bromacetate is therefore represented by b and that of the thiosulfate by a.

Apparatus and Chemicals Required

Thermostat, 2 burettes, 1 double burette holder, iron stand, one 50-ml., one 25-ml., and one 1-ml. pipette, one 250-ml. Erlenmeyer flask, two 250-ml. volumetric flasks, one 1-liter flask, one 100-ml. beaker.

Ethyl bromacetate, 0.01 N iodine solution, 0.015 N sodium thiosulfate solution, starch indicator solution.

Method of Procedure

Pipette about 0.4 ml. (approximately 15 drops) of ethyl bromacetate into a 250-ml. graduated flask.[1] Add distilled water, shaking the flask thoroughly to insure solution of the ester in the water. Make up to 250 ml. and place the flask in the thermostat.

Fill the other 250-ml. flask to the mark with sodium thiosulfate solution and place it in the thermostat.

When the temperature of both solutions has reached 25°, the two liquids are mixed in the 1000-ml. flask (the time of mixing being taken), the flask is shaken and placed in the thermostat.

[1] The ester has strong lacrymatory properties. It should be handled and diluted only in the fume hood.

At the end of five minutes (counted from the time of mixing) remove 50 ml. from the reaction flask, and titrate *rapidly* with the 0.01 N iodine solution, using starch as indicator.

At the end of 10, 15, 25, 40, 60, and 90 minutes (from the start of the reaction), withdraw 50 ml. from the flask, and titrate rapidly as before. Note the time at which iodine solution is run into the titration flask in each instance.

Between the last two titrations, determine the initial concentration of sodium thiosulfate in the flask by withdrawing 25 ml. from the stock bottle and titrating with iodine. Why withdraw 25 ml. here, instead of the 50 taken for the other titrations? Express this concentration in milliliters of the iodine required.

After at least five or six hours or, better still, at the start of the next laboratory period, titrate 50 ml. of the liquid remaining in the reaction flask. The reaction being presumably complete at this time, the volume of iodine solution required for this titration represents the excess of thiosulfate originally present in the mixture. The value of this titration, therefore, subtracted from the value of the titration of the 25 ml. of thiosulfate withdrawn from the stock bottle, gives the initial concentration of the ethyl bromacetate solution present in 50 ml. of the mixture, expressed in milliliters of iodine solution.

Calculations

1. Using the integrated equation for the velocity constant of bimolecular reactions, calculate the value of k for each sample, expressing the concentration in milliliters of iodine solution used.

2. Calculate the conversion factor by means of which the value of k found in 1 can be converted to values in which concentration is expressed in mols per liter, and so express it.

3. Calculate the half time from the velocity constant obtained in 1.

4. Plot the concentration of the ester, expressed in milliliters of iodine solution, against time, and determine from the curve the time required to convert half the ester. Compare this with the value obtained in 3.

EXPERIMENT 28

SECOND ORDER REACTION: SAPONIFICATION OF ETHYL ACETATE; CONDUCTIVITY METHOD

Object

To determine the reaction velocity constant for the saponification of ethyl acetate, using the conductivity method.

Discussion

In the bimolecular reaction, the saponification of ethyl acetate,

$$CH_3COOC_2H_5 + NaOH = CH_3COONa + C_2H_5OH$$

the progress of the reaction may be followed by titrating the quantities of NaOH present from time to time with standard acid; or it may be followed by observing the change in electrical conductance as sodium hydroxide is consumed and sodium acetate formed.

It is convenient to use equal initial concentrations of the reacting substances. This permits one to use the simplified second order equation for calculating the velocity constant in which $a = b$.

In this experiment, the conductivity method will be used. It is not necessary to determine the constant for the conductivity cell used. If A represents the observed conductance at the start of the reaction, E that at the end, and T that at time t (all in reciprocal ohms), the velocity constant is given by:

$$k = \frac{1}{t}\frac{x}{a(a-x)} = \frac{1}{t}\frac{(A-T)}{(A-E)[(A-E)-(A-T)]}$$

The student is referred to Experiment 37 for a discussion of the measurement of conductivity.

Apparatus and Chemicals Required

Thermostat, conductivity bridge with accessory apparatus (the conductivity cell should contain at least 50 ml.), small weighing bottle, 500-ml. flask, three 50-ml. pipettes, burette.

0.02 N sodium hydroxide solution, ethyl acetate.

Method of Procedure

A freshly prepared 0.02 M solution of ethyl acetate should be used. Accurately weigh out about 2 g. of the ester and add the proper quantity of water to bring the solution to 0.02 M. Place this solution in the thermostat.

Prepare a solution of 0.01 N NaOH by diluting 50 ml. of the 0.02 N solution with an equal volume of distilled water. Measure the resistance of the cell when filled with this solution. The initial conductance for the reaction is calculated from this value.

Before filling the cell with a new solution, proceed as follows: first rinse the cell with distilled water; then with the solution to be tested; then fill the cell with the solution to be tested.

At an observed time, mix 50 ml. of the 0.02 M ester and a like volume of the 0.02 N base and place the solution in the conductivity cell after rinsing as directed above. The time of mixing marks the start of the reaction.

Measure the conductance as soon as convenient, recording the exact time at which the measurement is made.

Continue to take conductance readings for the remainder of the laboratory period; taking them at 5-minute intervals for the first half hour, and at 10-minute intervals thereafter.

Record the time at which each measurement is made.

The final reading is to be taken at the beginning of the next laboratory period, when the reaction may be assumed to be completed. See to it that the succeeding group does not disturb the apparatus until after this final reading has been taken. After this reading is obtained, you may fill the cell with distilled water and leave it in the thermostat.

The conductance (in reciprocal ohms) should be calculated for each reading as the experiment proceeds.

Calculations

1. Plot observed conductances against elapsed time.
2. From four representative points on the above curve, calculate values for the velocity constant.
3. Calculate the half time from the observed velocity constant, and compare this value with that obtained from the curve.

BENZENE

ALCOHAL

EXPERIMENT 29

HEAT OF NEUTRALIZATION

Object

To determine the heat of neutralization of an acid by a base.

Discussion

The heats of neutralization of strong acids by strong bases, when sufficiently dilute to be completely dissociated, resolve themselves into the heat of formation of water from hydrogen and hydroxyl ion, thus:

$$H^+ + OH^- = H_2O + 13{,}800 \text{ cal.}$$

If either of the reactants is a weak electrolyte, or if the solution is so concentrated that there is no complete dissociation, the heat of neutralization will differ from the theoretical value given above by the amount of heat required to complete the ionization.

In determining heats of neutralization, one may use the mixture calorimeter shown in Fig. 26 or two vacuum flasks (a pint and a quart size).[1] The directions given in this experiment apply to a mixture calorimeter.

If vacuum flasks are employed, the quart size is used for containing the base and the mixture, and the pint size for containing the acid before mixing. The water equivalent of the quart flask, together with its thermometer and stirrer, may readily be determined by conducting therein a thermal reaction of known heat evolution, such as a known heat of neutralization or a known heat of solution; or it may be determined by electrical heating as outlined in Experiment 31. The Beckmann thermometer is placed in the large flask and the "ordinary" one in the small flask.

Apparatus and Chemicals Required

Mixture calorimeter (or 1-pt. and 1-qt. vacuum flask, each fitted with a glass hand stirrer), Beckmann thermometer, ordinary thermometer (0–50° in tenths), two 250-ml. volumetric flasks.

0.25 *N* sodium hydroxide (carbonate free; this solution may be slightly more concentrated), 0.25 *N* hydrochloric acid.

The calorimetric vessel is represented in Fig. 26. It consists of a highly polished cylindrical metallic vessel with cardboard or ebonite cover through which pass the Beckmann thermometer, the stirrer, and a glass tube for introducing the solution from the upper vessel. The upper vessel carries a quick-opening valve at the bottom. The calorimetric vessel is surrounded by three other cylindrical vessels and the annular space between the two outer cylinders is filled with water. The upper vessel can be swung into position for discharging its contents into the calorimeter.

Method of Procedure

Place 250 ml. of 0.25 *N* sodium hydroxide, accurately measured in one graduated flask, into the (lower) calorimetric vessel. Put the covers, the brass stirrer and the Beckmann thermometer in position, after setting the mercury column so that it reads about half a degree from the bottom of the scale when placed in the alkali solution.

Pour about 260 ml. of 0.25 *N* hydrochloric acid into the upper vessel, then run it back into the flask.

[1] *J. Ind. Eng. Chem.*, **18**, 163 (1926). See also: van Klooster, "A Simplified Mixture Calorimeter," *J. Chem. Educ.*, **12**, 285 (1935).

Make up to exactly 250 ml. In this way the error due to the acid adhering to the walls of the upper vessel when discharging the 250 ml. into the calorimeter is eliminated.

Return the accurately measured acid to the upper vessel and place the ordinary thermometer in this solution.

See that both the acid and the base are, when placed in the upper and lower vessel, at approximately the same temperature.

Stirring both solutions, alternately read the two thermometers at 30-second intervals for 5 minutes. Estimate the thousandths of degrees on the Beckmann thermometer by means of a reading glass and the hundredths of degrees on the ordinary thermometer in the same way.

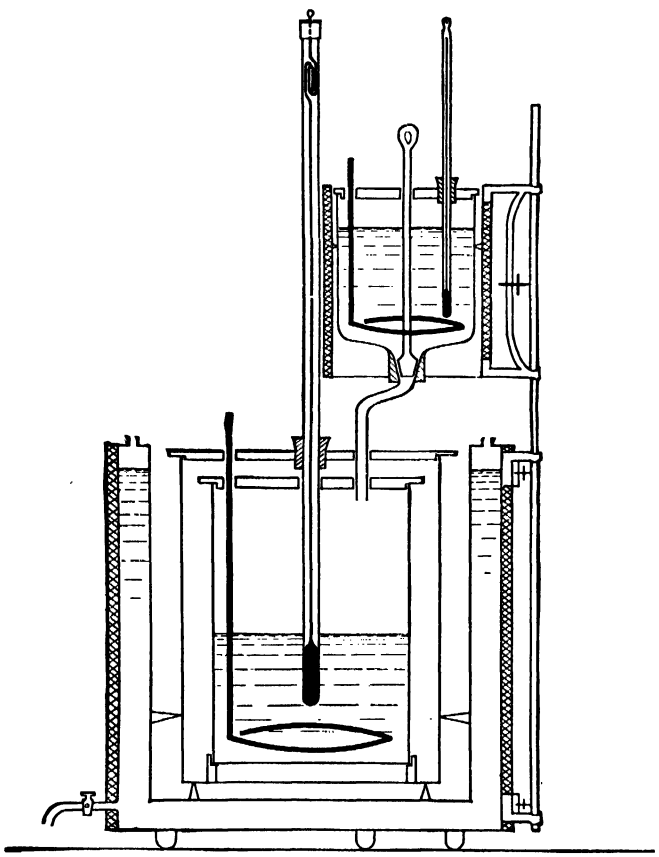

FIG. 26

At the sixth minute pull the stopper and allow the acid to flow into the alkali. Stir the mixture constantly and continue to take readings every minute on the Beckmann thermometer for the next 10 minutes. Record these readings.

Finally compare both thermometers by placing the ordinary thermometer next to the Beckmann in the lower vessel and, while stirring constantly, take the readings on both alternately for at least 3 minutes.

In order to find the water equivalent of the calorimeter and stirrer, weigh the calorimeter and the brass stirrer on an ordinary balance (to tenths of a gram), both being thoroughly dried beforehand. See Table 13 in the Appendix for specific heats.

The water equivalent of the portion of the Beckmann thermometer immersed in the liquid is readily found by water displacement. Counterpoise a tall narrow beaker of water on the ordinary balance by means of another beaker of water.

Carefully clamp the thermometer and support it on an iron stand so that only the bulb is immersed. The weight to be added on the other balance pan represents the volume of the water displaced by the glass and mercury of the bulb. Since 1 cc. of glass has approximately the same water equivalent ($2.5 \times 0.19 = 0.47$) as 1 cc. of mercury ($13.6 \times 0.034 = 0.46$) it is only necessary to multiply the weight of the displaced water by 0.47 to obtain the water equivalent of the bulb.

Since the stem of the thermometer above the bulb is also partly in the liquid, dip the thermometer as far in the water of the beaker as it was immersed in the solution in the calorimeter and again determine the weight of the water displaced.

Only one-fifth of the difference of this and the previous weight is solid glass (the stem being hollow); therefore take one-fifth of the difference of both weighings, multiply this by 0.47, and add this to the water equivalent of the bulb. This gives the total water equivalent of the immersed portion of the Beckmann thermometer.

Calculations

1. From the data secured when comparing the readings of the two thermometers, determine the constant deviation in scale readings for the two instruments. This value, when subtracted from the readings of the ordinary thermometer, converts those into equivalent Beckmann readings.

2. Plot temperatures against time, recording all values in terms of the Beckmann scale. By reference to Fig. 27, note the time O at which the maximum temperature was attained after

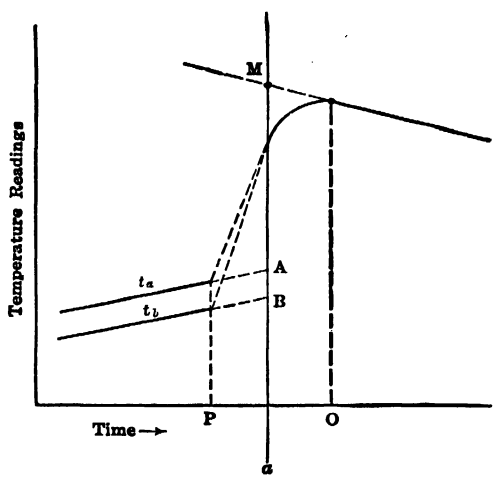

FIG. 27

mixing. Midway between O and P (the time of mixing) erect a perpendicular ab, and project the three curves to it.

The distance AM represents the true rise in temperature of the acid (dt_A) and BM the temperature rise of the base (dt_B). Since the base was in the calorimeter all the time, dt_B also represents the true rise in temperature of the calorimeter.

Heat liberated by neutralization $= 250\, dt_A + (250 + W)dt_B$, where W is the water equivalent of the apparatus.

3. To obtain the molecular heat of neutralization, apply the following relationship:

$$\text{Mol heat of neutralization} = \frac{\text{Heat liberated}}{n} \times \frac{1000}{v}$$

where n is the normality of the weaker solution (acid, usually),
v is the number of milliliters of acid (or base) used.

EXPERIMENT 30

HEAT OF COMBUSTION

Object

To determine the heat of combustion of a given carbon compound.

Discussion

When we speak of the calorific value of a substance, we refer to the amount of heat which is liberated when one gram is burned. The heat of combustion refers to the heat liberated when one gram mol of a substance is burned.

The oxygen bomb calorimeter is the standard apparatus for determining heats of combustion and calorific values. In this device, a weighed quantity of the material under investigation is burned in oxygen, under pressure, and the heat is absorbed by the apparatus itself and by a known quantity of water surrounding the bomb.

The water equivalent of the calorimeter is usually determined by carrying out a combustion on some substance having a known heat of combustion.

Apparatus and Chemicals Required

Standard combustion bomb calorimeter (oxygen type) with accessories.[1]

Sample bottles containing pure cane sugar, benzoic acid, and naphthalene for standardization purposes,[2] sample bottles containing organic compounds the heat of combustion of which is to be determined.

Fig. 28 and Fig. 29 show views of the Emerson bomb calorimeter which is widely used in this country for the determination of the heat value of coke, fuel oil, gasoline, etc.

Method of Procedure

A. Determination of the "Water Equivalent" Factor of the Apparatus. By means of a tabloid press, prepare a cartridge containing from 0.75 to 1 g. of benzoic acid, naphthalene, or cane sugar.

Weigh this accurately and place it in the small crucible of the bomb. Place the crucible in its support and attach a weighed iron fuse wire. This wire should be about 2 in. long and coiled at the center, the coil being directly above the pellet in the crucible. Fasten the ends of the wire to the electrodes by wrapping them tightly. The fuse wire should dip down into, but not touch, the crucible.

Place the outside shell of the bomb in its holder. Carefully place the top in position on the bomb, then screw the two parts together tightly by means of the spanner.

Transfer the bomb to the oxygen fixture and connect the gauge stand to the bomb by screwing up the union. Use the wrench to secure a tight joint. Open the needle valve in the head of the bomb about two turns and carefully "crack" the valve leading from the oxygen cylinder. Do not permit the oxygen to rush from the cylinder or the gauge may be ruined.

[1] Inasmuch as complete calorimetric outfits are obtainable from dealers a minute catalog of equipment is omitted. For careful work the adiabatic calorimeter equipped with vacuum-walled jacket is preferable, but most laboratories would hesitate to use so expensive and fragile an apparatus with beginners. The directions for this experiment are therefore given for a nonadiabatic calorimeter and hold equally well for any of the well-known types of oxygen bomb.

[2] Obtainable from the Bureau of Standards, Washington, D. C. Complete details regarding the standardization of bomb calorimeters are found in *Circular* 11 of the Bureau of Standards.

When the pressure in the bomb has been increased to 20 atmospheres, close the valve in the cylinder and then the valve in the bomb.

Disconnect the bomb from the fixture and find out by carefully listening for the escape of gas whether there are any leaks. If no leaks develop, place the bomb within the calorimeter, make the electrical connections, and adjust the stirring device.

Using a 500-ml. graduated flask, add sufficient water to immerse the bomb. (Most calorim-

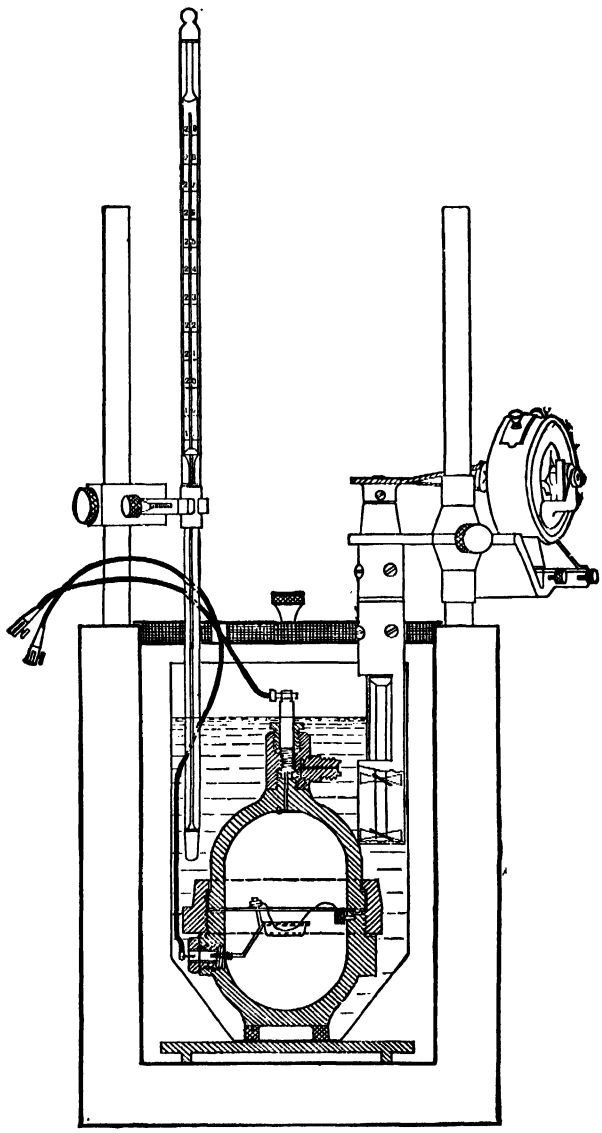

Fig. 28

eters require 2000 ml.) It is of the greatest importance that the temperature of this water be about (but not more than) one degree Centigrade below room temperature.

Place the covers in position and clamp the thermometer with its bulb immersed at least 4 in. In case a Beckmann thermometer is used it should be set so that the mercury thread stands near the bottom of the scale.

After the stirring outfit has been in operation for five or six minutes, take one-minute readings on the thermometer.

When ten consecutive readings have been obtained, ignite the material in the bomb by closing the firing switch. This should be done exactly on the minute and a note made of the time of firing.

The temperature will rise rapidly during the next few minutes. Continue to take minute readings until at least 15 observations have been made after the maximum temperature is reached and the changes per minute are regular and very small.

When through with the run, remove the bomb, replace it in the holder, and gradually allow the products of combustion to escape through the valve. Unscrew the top of the bomb and note whether the sample was completely burned. Also see whether the iron wire was completely or

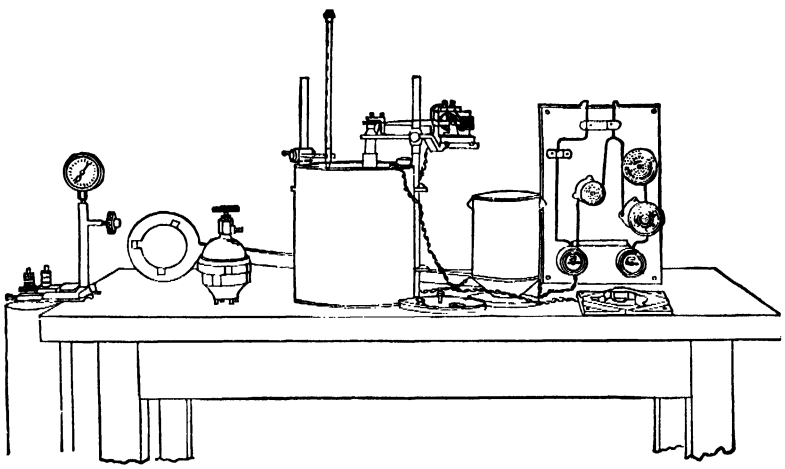

FIG. 29

only partly oxidized. Any remaining pieces of iron may be collected and weighed and this weight subtracted from the weight of iron originally taken.

B. DETERMINATION OF HEAT OF COMBUSTION FOR AN ASSIGNED CARBON COMPOUND. Prepare a tablet containing about 1 g. of the (solid) substance under investigation and weigh it accurately.

Follow the same direction as outlined under A and record the data.

Carefully clean and dry the bomb before leaving the room.

Calculations

1. Plot temperature *vs.* time. Project the initial and the final curve to a perpendicular erected midway between the time of firing and the time at which the maximum temperature was obtained (see page 122), and call the intersections on this line the true temperatures before and after ignition.

2. Knowing the heat of combustion of the substance used (benzoic acid 6320 cal./g.; cane sugar 3950 cal./g.; naphthalene 9693 cal./g., and iron 1600 cal./g.) calculate the heat liberated by the combustion. This heat divided by the corrected rise in temperature gives the apparent weight of water of the whole system which, minus the weight of water introduced, gives the "water equivalent" of the apparatus.

3. Using the value for the water equivalent found under 2, calculate the heat of combustion for the assigned substances in calories per gram and the molecular heat of combustion in calories per mole.

4. If the substance used is a fuel, calculate its heating value in British thermal units per pound.

EXPERIMENT 31

HEAT OF SOLUTION

Object

To determine the heat of solution of a given salt.

Discussion

Heats of solution may be measured calorimetrically in very much the same way as heats of neutralization. Indeed, the vacuum flask calorimeter described in this experiment may, with slight modification, be used to measure heats of neutralization, heats of solution, heats of reaction, heat of vaporization, specific heat, heats of ionization and hydration.

"Heat of solution," as ordinarily measured, is in reality the sum of the heat of solution plus the heat of ionization, if the solute is an electrolyte which is ionized at the dilution prepared. It is evident that the magnitude of the "heat of solution" will depend upon the concentration. The "integral heat of solution" is defined as the number of calories of heat evolved when one mol of solute is dissolved in sufficient solvent to produce a solution of the specified concentration.

In determining the water equivalent of the calorimeter, we may conduct a thermochemical reaction therein which gives a known heat effect and calculate the water equivalent; or we may dissipate electrical energy in the apparatus and calculate the water equivalent from the observed rise in temperature. The formulas used are:

$$q = \frac{RI^2s}{4.183} = \frac{EIs}{4.183} \qquad [1]$$

where q is the heat dissipated in calories,
s the time in seconds,
I the current in amperes,
R the resistance in ohms of the heating element,
E the voltage drop across the heating coil.

$$q = dt(W + w) \qquad [2]$$

where W is the water equivalent of the apparatus,
w the weight of water within the calorimeter,
dt the (corrected) temperature rise.

Apparatus and Chemicals Required

Vacuum calorimeter, as shown in Fig. 30. A 1-qt. vacuum food container is very satisfactory. The calorimeter should be fitted with a cork for most accurate work. The stirrer may be hand-operated or motor-driven. The heating element should have a resistance of about 5 ohms. Platinum wire should be used for corrosive solutions, although manganin is to be preferred wherever possible on account of its low temperature coefficient of resistivity. Beckmann thermometer, calibrated ammeter 0–1.5 amperes, calibrated voltmeter 0–5 volts, switch, copper wire, 6-volt storage battery, variable resistance, one 250-ml. volumetric flask calibrated to deliver, thin-walled test tube.

Various salts for the determinations.

Method of Procedure

Assemble the apparatus, observing care that the stirrer operates freely and does not strike the walls of the cylinder. Fill the Dewar cylinder with 750 ml. of water measured out in the graduated flask. The temperature of the water should be about one degree (not more!) below room temperature.

Weigh out sufficient finely powdered salt (assigned for the experiment) to give 1 mol of salt in

200 mols of water, place this amount in the thin-walled test tube, and suspend the latter in the water of the vacuum cylinder.

Clamp the Beckmann thermometer in place, after having "set" the mercury thread so that it stands midway on the scale when the bulb is immersed in the water.

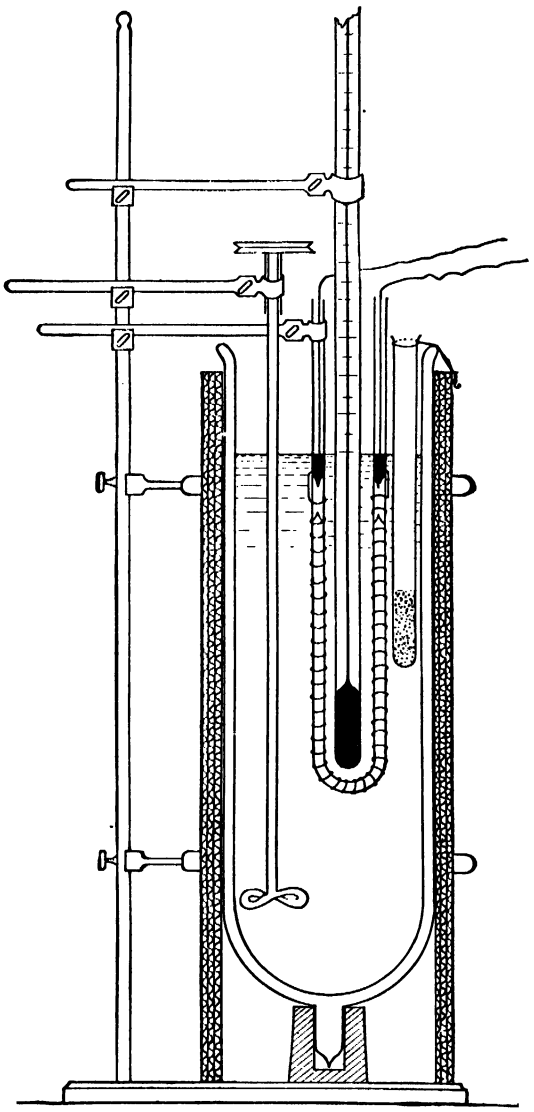

Fig. 30

Start the stirrer and test the electrical connections by closing the switch for an instant. The current should be equivalent to an expenditure of about 5 watts.

After about 5 minutes commence to record one-minute readings of temperature and continue until five readings of constant difference have been obtained. On the next full minute close the heating switch and record half-minute readings of ammeter and voltmeter and one-minute temperature readings.

Allow the current to pass until the temperature has risen about one degree, stop on the full minute, and remove the copper leads from the mercury cups.

After the current has been interrupted continue the temperature readings for 10 more minutes.

At the end of this period quickly lift the test tube out of the water and shake the salt into the cylinder, noting the exact time at which the transfer was made.

Replace the empty tube immediately and continue the one-minute temperature readings for at least 10 minutes.

Stop the motor and remove the heating coil from the solution.

Calculations

1. Calculate the electrical energy expended in the heating coil and from this determine the number of calories produced.

2. Plot the time-temperature curve on a sufficiently large scale and determine the true rise in temperature caused by the electrical heating. From this rise find the water equivalent of the system.

3. Plot the time-temperature curve for the period before and after adding the salt to the water and determine the true change in temperature caused by the solution of the salt. Knowing the water equivalent, find the integral heat of solution of the salt at the concentration used.

EXPERIMENT 32

HEAT OF VAPORIZATION. TROUTON'S LAW

Object

To determine the heat of vaporization for an assigned liquid, to compute its boiling-point constant, and to calculate the constant of Trouton's law.

Discussion

The latent heat of vaporization of a liquid is defined as the quantity of heat required to change one gram of the substance from the liquid to the vapor state, or vice versa. It is usually determined at the boiling point under a pressure of one atmosphere. The value changes with the temperature, and it is therefore frequently desirable to determine it over a series of temperatures and pressures.

For the precise determination of heats of vaporization, one may use the method developed by Mathews[1] or Kahlenberg's modification of Berthelot's method.[2] Each of these methods requires expensive and delicate apparatus.

The vacuum-flask calorimeter may be so modified as to afford a means for determining heats of vaporization with somewhat less precision, but with an accuracy sufficiently high for student work. The liquid under observation is placed within the flask and is evaporated by the expenditure of a measured quantity of electrical energy. The vapor thus produced is condensed and weighed directly.

The boiling-point constant for the liquid when used as a solvent in boiling-point work may be calculated from the formula:

$$K_b = \frac{RT^2}{1000 l_v}$$

where K_b is the boiling-point constant,
l_v the latent heat of vaporization per gram,
T the boiling point in degrees Kelvin.

Trouton discovered the following relationship between the molecular heat of vaporization $M \cdot l_v$ and the absolute temperature of the boiling point:

$$\frac{Ml_v}{T} = 21$$

The above equation has been modified by Nernst and by Bingham to:

$$\frac{Ml_v}{T} = 17 + .011T$$

Apparatus and Chemicals Required

One quart vacuum-flask calorimeter with tight-fitting rubber stopper through which pass (airtight): (1) thermometer, (2) heating unit designed to dissipate 30–50 watts, coiled at the bottom of the flask, and (3) short delivery tube connected to a condenser; stopwatch, ammeter (0–10 amperes), voltmeter (0–5 volts), control resistance, source of direct current, two 250-ml. iodine flasks, 100-ml. beaker.

Carbon tetrachloride or other suitable liquid for investigation.

[1] Mathews, *J.A.C.S.*, **48**, 562 (1926).
[2] Kahlenberg, *J. Phys. Chem.*, **5**, 215 (1901).

Method of Procedure[3]

Fill the vacuum flask about two-thirds full of the liquid to be investigated. Assemble the apparatus and adjust the flow of current so that the distillation proceeds at a uniform rate.

After about 50 ml. of distillate have been collected in the beaker, and the system has reached thermal equilibrium, replace the beaker with a weighed iodine flask and commence to collect condensate. Start the stopwatch at the same instant.

Record temperature, current, and voltage readings every half minute; also the barometric pressure at the start and at the end.

When about 75 ml. of liquid have been collected, remove and stopper the iodine flask, stopping the watch at the same instant, and weigh the flask and contents.

Repeat the procedure, collecting and weighing a second sample.

Calculations

1. Calculate the heat of vaporization for each trial.
2. From the mean of these two values, compute the boiling-point constant.
3. Calculate the constant in Trouton's law.
4. Calculate the value of M in the Nernst-Bingham modification of Trouton's law and compare it with the simplest molecular weight for the liquid. Does it suggest association or dissociation?

[3] Since in the procedure described here, no account is taken of the heat radiated by the calorimeter to its surroundings, the heats of vaporization obtained will be too high. For precise work, a correction should be applied.

EXPERIMENT 33

SURFACE FILMS; FILM PRESSURE BALANCE

Object

To measure the surface pressure of a film on water, and to determine the cross-sectional area of the molecules of the film.

Discussion

When a drop of oil is placed on the surface of a liquid, the oil will form a globule if the cohesional force in the oil is greater than the adhesional force between the oil and the liquid. If, however, the attraction between the molecules of the oil and of the liquid is greater than the attraction between the molecules of the oil, the oil will spread on the surface of the liquid. When the liquid is water, oils which have a polar group in the molecule will tend to spread. In the case of the higher alcohols, for instance, the great attraction between water and the OH group will cause the alcohols to spread, but the long hydrocarbon chains will prevent solution. A surface film formed by the spreading of a drop of such an alcohol will consist of a layer of the alcohol one molecule deep with the OH groups dissolved in or oriented toward the water and the hydrocarbon chain of each molecule pointing away from the water. Films of similar structure result if any insoluble oil having a polar group spreads on water, as long as sufficient surface is available for the layer to be formed one molecule in thickness.

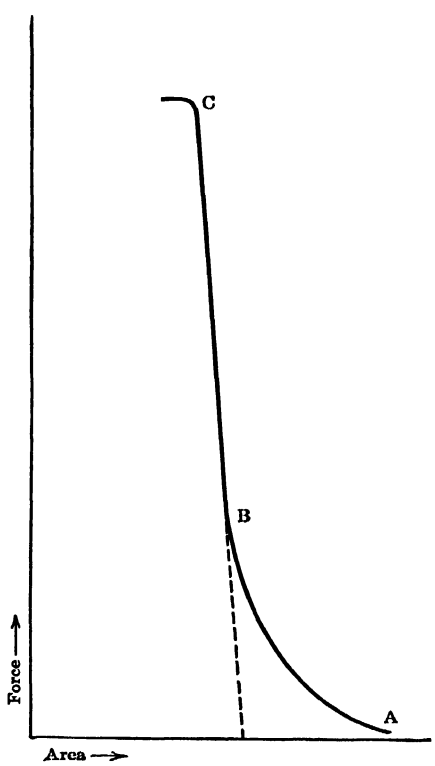

FIG. 31

If the layer of oil has been allowed to form on a tray filled with water, across which a barrier has been stretched, the film may be compressed by movement of the barrier across the tray, reducing the area occupied by the film. If the tray is equipped with two barriers, one arbitrarily movable and one fastened through a rigid support to a wire hung across the tray, compression of the film resulting from motion of the movable barrier will displace the floating barrier, rotating the wire from which it is suspended. If a torsional force is applied to the wire, the floating barrier may be returned to its original position. The countertorsional force required will be related directly to the surface pressure of the film on the floating barrier. From the weight of the oil drop used to form the layer, its molecular weight, and the area occupied by the film, the area per molecule may be calculated. For films of fatty acids and other long chain compounds, curves of the type shown in Fig. 31 have been obtained when the force in dynes per centimeter along the barrier is plotted against the area per molecule.

At pressures corresponding to the section *AB* of the curve, molecules of the film are close enough to exercise a measurable repelling force against each other. At the point *C*, when the pressure on the film has forced the layer to reach its limit of compression, the film buckles and collapses, little force being required to further reduce the area required by the fatty acid film. If the line *CB*, representing compression of the closely packed molecules, is extrapolated to zero

pressure, the value of the area per molecule thus obtained is interpreted as the cross-sectional area under zero compression.

Film Balance

In Fig. 32 is shown a diagram of a film balance with which measurement may be made of the surface forces exerted by compressed films.

It consists of a tray of known width, with a scale along the side showing its length, an adjustable barrier A, and a floating barrier B attached to a support C. The support is fastened to a taut wire D and extends in a pointer arm to a scale with a zero mark. The wire is stretched between the points O' and O, being fixed at O' and rotatable about the axis of the scale F. If the barrier B is displaced by a force it may be returned by rotation of the wire in an opposite direction to that of the rotation caused by displacement of the barrier. The countertorque required is measured by the movement of the arm G, fastened to the wire, about the scale F. This scale, which is graduated in degrees, is calibrated in dyne-centimeters by suspension of weights from a hook on the lever arm H. The

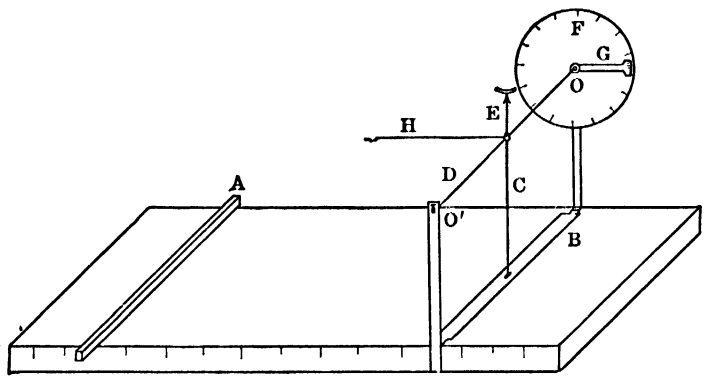

FIG. 32

pointer E is restored to its zero position on rotation of the wire by means of arm G. The torque corresponding to the angular displacement of arm G is equal to the product of the mass of the weight used times the acceleration due to gravity, times the length of the lever arm H.

Having calibrated the scale F in dyne-centimeters, one is able to determine the magnitudes of forces acting on the barrier B by dividing the torque registered by the arm G, by the length of the lever arm C.

Apparatus and Chemicals Required

Surface film pressure balance and calibrating weights, 100-ml. volumetric flask, weighing bottle, 1-ml. Mohr pipette or microburette.

Oleic acid or other long chain compound which will spread on water, benzene or hexane, and paraffin.

Method of Procedure

Coat the tray and barriers with paraffin. Prepare 100 ml. of a solution of oleic acid in benzene or hexane, containing 0.005 mol of acid per liter, by weighing out the proper quantity of oleic acid in a weighing bottle, dissolving it in the solvent, and diluting to 100 ml. in the volumetric flask. Fill the tray of the film balance with distilled water until the water meniscus rises above the edge of the tray. Scrape the area free of foreign material on both sides of the barrier by drawing a bar across the water surface away from the barrier. Let drops of the acid solution fall from a microburette to the surface of the water in the tray until a film is formed covering at least half the area between the barriers after the benzene or other solvent has evaporated.

Push the movable barrier toward the floating one until the film is being compressed enough to

cause the pointer on the torsion wire to be displaced from the zero position. Restore the pointer to zero by rotating the wire, recording the degrees of counterrotation required and the distance between the two barriers. Decrease the barrier separation distance, changing the position of the movable barrier by small amounts, measuring and recording for each position the degrees of rotation required to restore the zero setting of the floating barrier and the distance between the barriers. Continue until the surface film collapses, after which further reduction in film area will result in only a slight increase in film pressure.

The tray should be drained and tray and barriers thoroughly rinsed with distilled water after use.

If a calibration of the balance is not given, one should be made by means of the weights provided. Hang each weight in turn on the hook of the weight arm and rotate the torsion wire until the pointer has returned to zero. Record the value of the weight and the degrees of rotation required for each weight. Measure and record the length of the lever arm of the weights and the lever arm on which the film pressure acts, and the effective length of the film barrier. The force of gravity in dynes on the weights times the length in centimeters of their lever arm will be equal to the force in dynes exerted at the film barrier times the length of the lever arm of the barrier. The force in dynes per centimeter along the barrier may then be calculated from the effective length of the floating barrier.

Measure and record the width of the tray.

Calculations

1. Calculate the dynes of force per centimeter exerted on the barrier for each degree of rotation of the wire, using the information obtained in the calibration of the balance.
2. From the weight and molecular weight of acid used, the area of the film and the degrees of rotation of the wire corresponding to the surface pressure, calculate the dynes of force per centimeter exerted by the film and the area per molecule at each setting of the movable barrier.
3. Plot the dynes of force per centimeter against the area per molecule, using the data from 2.
4. By extrapolation to the area axis of the portion of the curve obtained for the closely compressed film, find the cross-sectional area per molecule at zero pressure.

EXPERIMENT 34

ADSORPTION FROM SOLUTION

Object

To study the adsorption of acetic acid by charcoal and to determine the constants of the Freundlich adsorption isotherm.

Discussion

Many cases of adsorption of dissolved substances by solids may be formulated (at least within certain concentration limits) by the equation for the adsorption isotherm proposed by Freundlich:

$$\frac{x}{m} = ky^n$$

where $\frac{x}{m}$ represents the weight of material adsorbed per unit mass of adsorbing medium,
y the concentration in the solution, at equilibrium,
k and n are constants under the given conditions.

In carrying out an investigation of this character, one usually brings definite masses of the adsorbent into contact with a series of solutions of varying initial concentrations of the reagent to be adsorbed and, after equilibrium has been established, he filters and analyzes the various liquids to determine the degree of adsorption in each case. Obviously, the amount adsorbed in each instance is equal to the initial minus the final concentration.

The adsorption curve is plotted from these data.

The equation for the adsorption isotherm may be written in the logarithmic form as follows:

$$\log \frac{x}{m} = \log k + n \log y$$

When $\log \frac{x}{m}$ is plotted against $\log y$, a straight line will be obtained if the equation holds for the case under investigation.

The constants k and n are taken from the intercept and the slope of the line thus obtained.

Apparatus and Chemicals Required

Six stoppered 125-ml. flasks, six 125-ml. Erlenmeyer flasks, one 50-ml. volumetric flask, burette and holder, one 10-ml. pipette, filter stand, 2 funnels, two 100-ml. beakers, filter paper.

Blood charcoal, approx. 0.4 N acetic acid (23 ml. of glacial acetic acid made up to 1 liter) 0.1 N alkali, phenolphthalein.

Method of Procedure

Into each of the six stoppered flasks, labeled 1 to 6, place exactly 5 g. of charcoal.[1] Place in each flask 50 ml. of acetic acid solution made up (in the volumetric flask) as follows:

[1] Inasmuch as different samples of charcoal exhibit wide variations in adsorbing power, it is desirable for the instructor to determine the proper quantity to use and advise the students before they begin the experiment. Blood charcoal is recommended.

No. 1 stock solution of acetic acid (approx. 0.4 N).
No. 2 25 ml. of acetic acid plus water.
No. 3 15 ml. of acetic acid plus water.
No. 4 7.5 ml. of acetic acid plus water.
No. 5 4 ml. of acetic acid plus water.
No. 6 2 ml. of acetic acid plus water.

Do not neglect to rinse the volumetric flask with water each time.

Shake each sample for at least 5 minutes, taking care to keep them all at the same (room) temperature.

Filter the solutions and collect the filtrates in properly labeled flasks. These solutions are now analyzed for acetic acid, by titration with NaOH, 10-ml. samples being used for solutions 1 and 2; 20-ml. for 3 and 4; and 40-ml. for 5 and 6.

Care must be observed in titrating numbers 5 and 6, for they do not require much reagent and there is not sufficient solution left for another sample.

Also titrate 10 ml. of the stock acetic acid.

Calculations

1. From the analysis of the stock solution and the dilutions made in preparing the six solutions, calculate the volume of base which would have been required to neutralize the acid initially present in each of the six flasks and record this volume as the "initial concentration."

2. From the titration of each filtered solution and the ratio between the total volume placed in the stoppered flask and the volume of sample titrated, calculate the volume of base which would be required to neutralize all the acid left in solution in each flask after adsorption had taken place. Record this as "final concentration."

3. Initial concentration minus final concentration equals amount adsorbed. Let "final concentration" equal y and amount adsorbed $\frac{x}{m}$.

4. Plot y against $\frac{x}{m}$ and draw the adsorption isotherm.

5. Plot $\log y$ against $\log \frac{x}{m}$ and ascertain the values of k and n from the curve so obtained.

EXPERIMENT 35

FLOCCULATION OF SUSPENSOIDS BY ELECTROLYTES

Object

To determine flocculation values for a negative (or positive) suspensoid sol, using electrolytes having cations (or anions) of different valence, in order to test the validity of the Schulze-Hardy rule.

Discussion

The flocculation value of a suspensoid sol represents concentration of electrolyte (in millimols per liter) necessary to precipitate the sol completely after a stated interval of time. The volume used for computing the concentration is the *total* volume of sol + added electrolyte. The values obtained for the negative As_2S_3 sol with salts having mono-, di-, and trivalent cations can be related to the actual number of millimols adsorbed by the flocculated colloid. These values, according to Freundlich, should be in the ratio of 3 : 1.5 : 1. If these numbers are plotted against the flocculation values 3 points of an adsorption isotherm should be obtained. The equation of such a curve (see Experiment 34) is:

$$x = ky^n \qquad [1]$$

where x is the amount of material adsorbed per gram of adsorbent,
y is the concentration of the adsorbed substance in the solution,
k and n are constants.

In its logarithmic form this equation becomes:

$$\log x = \log k + n \log y \qquad [2]$$

which is a straight-line relationship. If one plots, therefore, log 3, log 1.5, and log 1 against the logs of the corresponding flocculation values, the points obtained should lie on a straight line.

Apparatus and Chemicals Required

Four burettes and holders, 2 test-tube racks, twenty-five 50-ml. Pyrex test tubes, 10-ml. pipette, 2000-ml. Erlenmeyer flask, CO_2 generator, H_2S generator.

0.2 *M* NaCl (11.7 g. per liter), 0.005 *M* $BaCl_2$ (1.22 g. $BaCl_2 \cdot 2H_2O$ per liter), 0.0005 *M* potash alum solution (0.237 g. $KAl(SO_4)_2 \cdot 12H_2O$ per liter) amorphous arsenic (As_2O_3).

Method of Procedure

Boil about 5 g. of As_2O_3 for 10 minutes with 200 ml. of distilled water, filter the hot solution into a 2-liter Erlenmeyer flask and dilute the filtrate to 1000 ml.

Pass a rapid stream of H_2S (hood!), washed by bubbling through water, into the solution until the opalescent liquid becomes turbid and remove the excess of H_2S by bubbling a stream of CO_2 through the sol. Filter the sol before use.

Thoroughly clean all test tubes and carefully steam them.

From 2 burettes containing distilled water and the stock solution of NaCl run into 5 numbered test tubes 8, 6, 4, 2, and 0 ml. of water and 2, 4, 6, 8, and 10 ml. of NaCl solution.

In 5 other numbered test tubes pipette 10 ml. of the As_2S_3 sol, and to each of these add in turn the corresponding dilute NaCl solution. In each case mix the sol and the electrolyte *in exactly the same manner* by inverting the stoppered tubes twice, *without vigorous shaking*. After 15 minutes'

standing (for more accurate work 2 hours are taken) each tube is once more inverted, and after standing for 5 minutes more the samples are examined against a dark background.

Take the lowest concentration at which a clear solution appears above the settling precipitate as the (approximate) flocculation value.

In order to fix this value more accurately, start another series of 5 test tubes with smaller variations in concentration than previously employed and operate as before.

Follow the same procedure for the other two electrolytes and find their flocculation values. These values, which should be in the neighborhood of 50, 0.75, and 0.09, respectively, depend somewhat on the concentration of the sol. (If time permits, determine the flocculation values again for a sol having $\frac{1}{5}$ of the previous concentration.)

Plotting the Results

1. Plot flocculation values against the numbers 3, 1.5, and 1.
2. Plot log 3, log 1.5, and log 1 against the logarithms of the flocculation values.

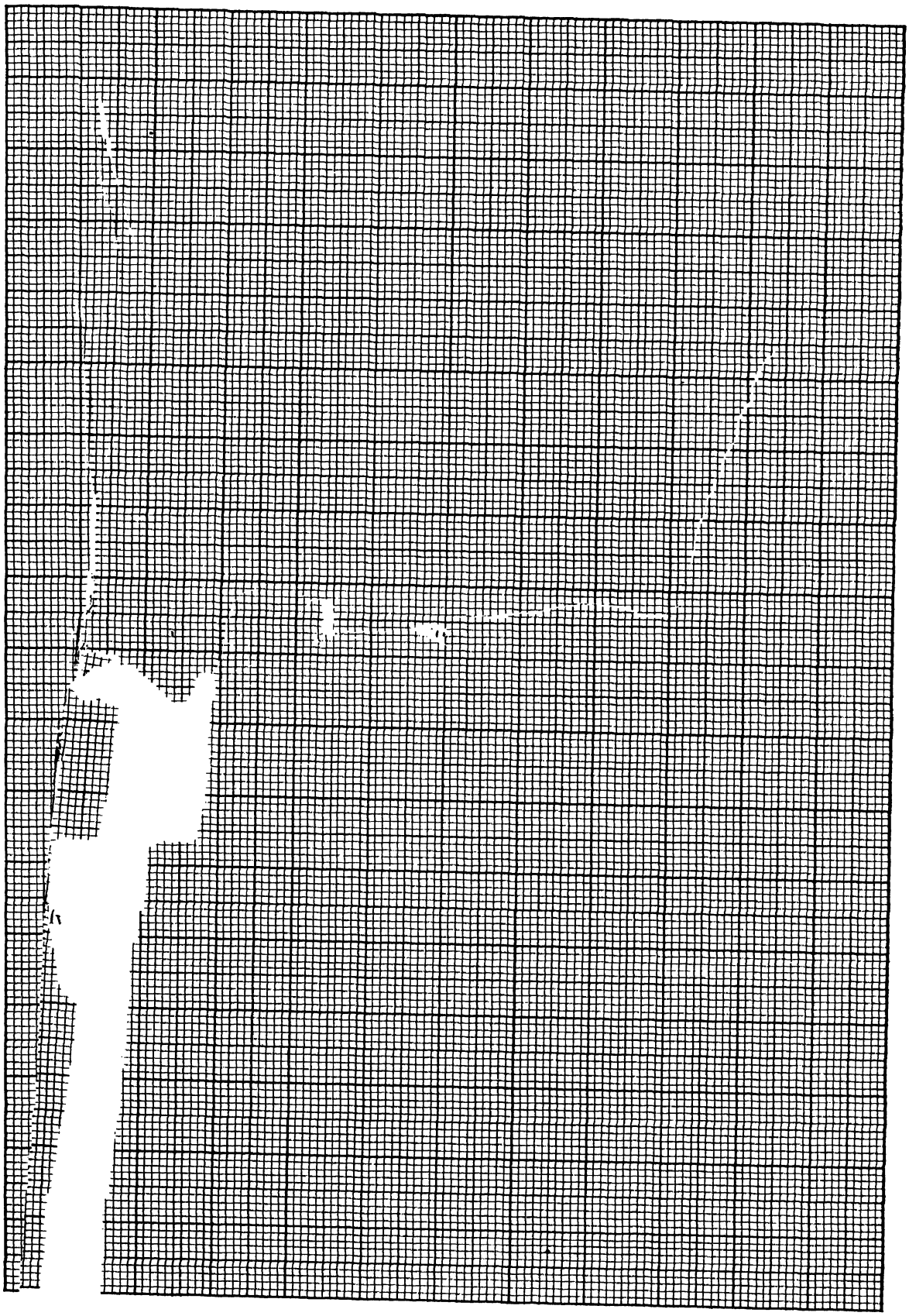

EXPERIMENT 36

SOLUBILITY PRODUCT

Object

To determine the solubility product for a sparingly soluble electrolyte and to investigate the influence of common ions and complex formation on its solubility.

Discussion

CASE I. Determination of the solubility product. Silver bromate is a sparingly soluble salt.[1] When a saturated solution is prepared at room temperature, the dissolved portion is almost completely dissociated.

$$AgBrO_3 = Ag^+ + BrO_3^-$$

If one expresses the solubility of the salt in mols per liter, it is evident, if the dissolved portion is completely dissociated, that the concentrations of silver and bromate ions will be identical with the solubility.

$$S = C_{Ag^+} \cdot C_{BrO_3^-} = x^2 \qquad [1]$$

where S is the solubility product,
x the ionic concentration.

CASE II. Solubility of $AgBrO_3$ in the presence of $AgNO_3$. When a saturated solution of silver bromate is prepared in the presence of an electrolyte which produces a common silver ion, the solubility is lowered in accordance with the following mass law equation:

$$S = (C_{Ag^+} + C'_{Ag^+})(C_{BrO_3^-}) \qquad [2]$$

where C'_{Ag^+} is the concentration of silver ion originating from dissociation of the added electrolyte,
C_{Ag^+} is that originating from the dissolved silver bromate. Since

$$C_{Ag^+} = C_{BrO_3^-} = x_1$$

$$S = (x_1 + C'_{Ag^+})x_1 \qquad [3]$$

CASE III. Solubility of silver bromate in the presence of sodium bromate.

$$S = C_{Ag^+}(C_{BrO_3^-} + C'_{BrO_3^-})$$

where $C_{BrO_3^-}$ is the concentration of bromate ion originating from the dissolved si
$C'_{BrO_3^-}$ is that originating from the dissociation of the added sodium bromat

$$C_{Ag^+} = C_{BrO_3^-} = x_2$$

$$S = x_2(x_2 + C'_{BrO_3^-})$$

CASE IV. The solubility of silver bromate in the presence of the complex-formi ing ion: nium. In the presence of ammonium hydroxide, silver bromate forms a soluble c omplex salt in accordance with the following equation:

$$AgBrO_3 + 2NH_3 = Ag(NH_3)_2BrO_3$$

This dissociates as follows:

$$Ag(NH_3)_2BrO_3 = Ag(NH_3)_2^+ + BrO_3^-$$

[1] Reedy, *J.A.C.S.*, **43**, 1442 (1921).

Since the silver in this complex cation is not available for depressing the solubility of silver bromate, we may write the following expression for the solubility of the bromate:

$$S = C_{Ag^+}(C_{BrO_3^-} + C'_{BrO_3^-})$$

where C_{Ag^+} and $C_{BrO_3^-}$ are the ionic solubilities coming from the dissolved silver bromate, and $C'_{BrO_3^-}$ is the ionic concentration coming from the ionization of the complex.

Since C_{Ag^+} is equal to $C_{BrO_3^-}$ we will denote these by x_3, whence

$$S = x_3(x_3 + C'_{BrO_3^-})$$

Note: In this experiment, it will be assumed that the degrees of dissociation of all the electrolytes involved are 100 per cent. In work of the highest accuracy, activities should be used in place of concentrations.

Apparatus and Chemicals Required

Thermostat, fitted with horizontal rotator for solubility work, five 4-oz. oil-sample bottles, one 50-ml. pipette, cotton filters for same, six 125-ml. Erlenmeyer flasks, burette and holder.

Pure silver bromate, 0.01 *N* sodium bromate, 0.01 *N* silver nitrate; 0.02 *N* ammonium hydroxide; 0.05 *N* KCNS, saturated ferric ammonium sulphate solution, nitric acid.

Method of Procedure

Clean the five oil-sample bottles thoroughly, dry them, and place 1 g. of silver bromate (weighed approximately) in each. Then make the following additions:

To No. 1, 75 ml. of cold distilled water.
To No. 2, 75 ml. of hot distilled water.
To No. 3, 75 ml. of 0.01 *N* $AgNO_3$.
To No. 4, 75 ml. of 0.01 *N* $NaBrO_3$.
To No. 5, 75 ml. of 0.02 *N* NH_4OH.

Stopper the bottles carefully and label them. Shake bottle No. 2 vigorously for 5 minutes.

Place the bottles in the thermostat and let them run several hours. Whenever possible, this preliminary part of the experiment should be performed the day preceding the one on which the analyses are to be made.

Standardize the KCNS solution against the 0.01 *N* $AgNO_3$, as follows: Withdraw a 50-ml. sample of the silver nitrate, and run it into 25 ml. of distilled water in an Erlenmeyer flask. Add 5 ml. of ferric ammonium sulfate solution, 5 drops of nitric acid, and titrate to a faint, permanent pink.

Analyze the solution in each bottle in the same manner. In withdrawing samples, stop each bottle in turn with its neck protruding above the water in the bath and remove the cork. Fit a cotton filter to the 50-ml. pipette and fill the pipette to some point above the mark. Remove the filter, adjust the volume to the mark, and run the sample into a marked Erlenmeyer flask.

In analyzing bottle No. 5 (Case IV) it must be remembered that titration with KCNS evaluates the silver present in the complex ion $Ag(NH_3)_2^+$ as well as the silver in the simple ion Ag^+. The known amount of $Ag(NH_3)_2^+$ must be subtracted from the total silver found to give the amount of Ag^+ present.

Calculations

1. From the data in Case I, calculate the solubility product for silver bromate.

2. From the solubility product obtained above and from the known concentrations of $AgNO_3$, $NaBrO_3$, and NH_4OH used in Cases II, III, and IV, calculate the concentration of Ag^+ coming from the dissolved $AgBrO_3$ in each case, and compare these results with the amount of Ag^+ which was found by analysis in each case.

EXPERIMENT 37

CONDUCTIVITY AND CONDUCTANCE RATIO

Object

To determine the equivalent conductance of an electrolyte in solution and to calculate the conductance ratio and verify Ostwald's dilution law for weak electrolytes.

Discussion

Electrical conductance of solutions may be measured by means of an alternating current Wheatstone bridge, as illustrated in Fig. 33. Alternating current is used in measuring electrolytic

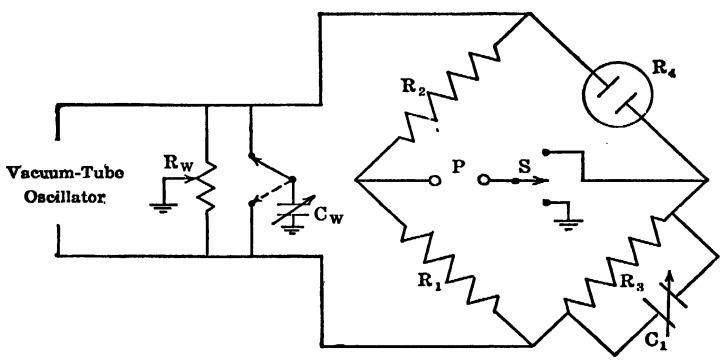

FIG. 33

conductances in order to avoid the occurrence of electrolysis, which will change the concentrations at the electrodes and introduce new substances. When an alternating current of high frequency is used and the current changes direction 2000 to 3000 times per second, the effects of electrolysis are made neglible.

The alternating current used in the bridge may be generated by means of a microphone "hummer" in which the rate of alternation of the current from an induction coil is controlled by an electrically driven tuning fork. A better source of current is a vacuum-tube oscillator in which a vacuum tube is used to maintain oscillation of current in a circuit. The rate of oscillation is determined by the magnitude of an inductance and of a capacitance in the circuit.[1]

In Fig. 33 the four resistance arms of the bridge are made up of two ratio resistors of fixed equal values, R_1 and R_2, a variable resistance R_3, and the cell R_4. The bridge is balanced by setting the resistance R_3 at such a value that no current flows through the telephone P which is used as a detector.

In order to obtain a balance of the Wheatstone bridge when high-frequency alternating current is used, unavoidable capacity effects in the conductance cell must be compensated for by the introduction of a condenser C_1 in parallel with the resistance R_3.

When a measurement of the cell resistance is made, both R_3 and C_1 are varied until the sound in the telephone disappears or is reduced to a minimum.

In order to avoid current loss from the bridge and to obtain a sharp minimum, the telephone circuit must be maintained at ground potential. The Wagner ground, as modified by Jones and Josephs,[2] provides a grounding system. With the telephone connected to the bridge, the resistance

[1] An excellent oscillator for student use is described by W. F. Luder and A. A. Vernon, *J. Chem. Educ.*, **17**, 229 (1940).

[2] Jones and Josephs, *J. Am. Chem. Soc.*, **50**, 1049 (1928).

EXPERIMENT 37

CONDUCTIVITY AND CONDUCTANCE RATIO

Object

To determine the equivalent conductance of an electrolyte in solution and to calculate the conductance ratio and verify Ostwald's dilution law for weak electrolytes.

Discussion

Electrical conductance of solutions may be measured by means of an alternating current Wheatstone bridge, as illustrated in Fig. 33. Alternating current is used in measuring electrolytic

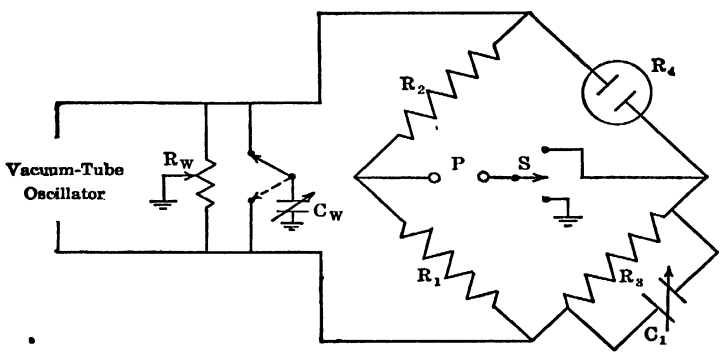

FIG. 33

conductances in order to avoid the occurrence of electrolysis, which will change the concentrations at the electrodes and introduce new substances. When an alternating current of high frequency is used and the current changes direction 2000 to 3000 times per second, the effects of electrolysis are made neglible.

The alternating current used in the bridge may be generated by means of a microphone "hummer" in which the rate of alternation of the current from an induction coil is controlled by an electrically driven tuning fork. A better source of current is a vacuum-tube oscillator in which a vacuum tube is used to maintain oscillation of current in a circuit. The rate of oscillation is determined by the magnitude of an inductance and of a capacitance in the circuit.[1]

In Fig. 33 the four resistance arms of the bridge are made up of two ratio resistors of fixed equal values, R_1 and R_2, a variable resistance R_3, and the cell R_4. The bridge is balanced by setting the resistance R_3 at such a value that no current flows through the telephone P which is used as a detector.

In order to obtain a balance of the Wheatstone bridge when high-frequency alternating current is used, unavoidable capacity effects in the conductance cell must be compensated for by the introduction of a condenser C_1 in parallel with the resistance R_3.

When a measurement of the cell resistance is made, both R_3 and C_1 are varied until the sound in the telephone disappears or is reduced to a minimum.

In order to avoid current loss from the bridge and to obtain a sharp minimum, the telephone circuit must be maintained at ground potential. The Wagner ground, as modified by Jones and Josephs,[2] provides a grounding system. With the telephone connected to the bridge, the resistance

[1] An excellent oscillator for student use is described by W. F. Luder and A. A. Vernon, *J. Chem. Educ.*, **17**, 229 (1940).

[2] Jones and Josephs, *J. Am. Chem. Soc.*, **50**, 1049 (1928).

R_3 and the capacitance C_1 are varied until the sound is at a minimum. The telephone is then connected to ground by means of the switch S. The position of the tap of the resistance R_w and the capacitance of C_w are varied until a minimum in the telephone is obtained. When this has been done, the telephone, now at ground potential, is connected to the bridge again. The resistance R_3 and capacitance C_1 are then again adjusted to give the most complete silence in the telephone.

When the bridge has been properly balanced, the resistance of the conductance cell may be calculated from the relation

$$\frac{R_4}{R_3} = \frac{R_2}{R_1}$$

If possible, the resistors R_1, R_2, and R_3 should be constructed so as to have the same resistance with alternating current as with direct current.

The conductivity cell consists of a chamber containing the solution whose conductance is to be measured, fitted with two platinum electrodes. The area and separation of the electrodes are designed so that when the cell is filled with the desired electrolyte solution, the resistance of the cell falls within the usable measuring range of the Wheatstone bridge used. In order to reduce polarization, the electrodes are coated with a layer of platinum black before use.

The conductance C of the solution, in reciprocal ohms, may be calculated from the measured resistance R of the cell, since:

$$C = \frac{1}{R} \qquad [1]$$

The specific conductance L of a solution is defined as the conductance of one centimeter cube of that solution taken between parallel electrodes, each one centimeter square and separated from each other by a distance of one centimeter.

It is evident that it would be extremely difficult to secure and maintain a conductivity cell which would fulfill the requirements for the measurement of specific conductance. For this reason, conductances are usually measured in calibrated cells of varying size for which the "cell constants" are known.

The cell constant is the factor by which the observed conductance in a given cell is multiplied to obtain the specific conductance. This is determined by measuring the conductance of a solution of known specific conductance and dividing this specific conductance by the observed conductance. In calibrating the cell one of the potassium chloride solutions listed in Table 14 of the Appendix, for which the specific conductances are accurately known, may be used.

The equivalent conductance of a solution Λ is the conductance of one equivalent of solute. It is obtained by multiplying the specific conductance by the volume v in milliliters required to contain one equivalent.

$$\Lambda = Lv \qquad [2]$$

Equivalent conductance approaches a maximum value with increased dilution. This maximum value Λ_0 is sometimes called the "equivalent conductance at infinite dilution" and represents the sum of the individual ionic conductances involved. See Tables 15 and 16, in the Appendix, for values of ionic and equivalent conductances at infinite dilution.

In the early Arrhenius theory of electrolyte dissociation, the conductance ratio $\frac{\Lambda}{\Lambda_0}$ is termed the degree of dissociation. In the modern theory, it is no longer believed that there is a direct connection between conductance ratios and degrees of dissociation, because conductance depends upon mobilities of ions as well as upon their numbers. Mobilities have been found to vary with concentration. However, conductance ratios give a good approximation of degrees of dissociation in the case of moderately dilute solutions of weak electrolytes, since the effect of interionic attraction, which reduces ionic speeds, is least in such solutions.

The Ostwald dilution law is an application of the law of mass action to ionization. It is valid only for weak electrolytes:

$$K = \frac{\alpha^2}{(1 - \alpha)V} \qquad [3]$$

where K is the ionization constant,
α is the degree of dissociation,
V is the volume in liters required to contain one equivalent of the solute.

Apparatus and Chemicals Required

25° thermostat, conductivity cell, two 10,000-ohm resistances, four-dial 11,111-ohm variable resistance, 50,000-ohm resistor with tap, two variable condensers, vacuum-tube oscillator providing alternating current of high frequency, telephone, necessary wiring, 25-ml. pipette, 50-ml. volumetric flask.

Solution of KCl containing 0.746253 g. of KCl in 1000 g. of water (0.01 demal), 0.0625 N solution of acetic, benzoic, succinic, or other weak acid (or base), conductivity water.[3]

Method of Procedure

The electrodes of the conductivity cell should be freshly coated with platinum black. Rinse the cell three times with the 0.01 demal potassium chloride solution. After thorough rinsing, fill the cell with 0.01 demal KCl solution and place it in the thermostat at 25°. Connect the cell in the Wheatstone bridge, supply current to the bridge from the oscillator, and balance the bridge as described in the discussion. Record the resistance measured for the cell filled with the solution.

Empty the cell and rinse with conductivity water. Following the same procedure as with the KCl solution, wash the cell with three portions of the 0.0625 N weak acid assigned, fill it with the acid solution, and measure the resistance of the solution. Record the value obtained and the concentration of the solution used.

Proceeding as above, measure the resistance of the cell when filled with solutions of the acid at the following concentrations, $M/64$, $M/128$, $M/256$, $M/512$, and record it for each solution. The solutions should be prepared by diluting a 25-ml. sample of the solution having double the concentration required in a 50-ml. volumetric flask. Conductivity water must be used for the dilution. Solutions may be taken from the cell after the resistance has been measured and may be diluted to prepare the succeeding ones. The pipette used in transferring solutions should be washed with distilled water and rinsed with the solution used whenever a new solution is placed in it.

When the experiment is finished, wash the cell and fill it with distilled water. The coating of platinum black loses its effectiveness if allowed to dry out.

Calculations

1. Calculate the cell constant.
2. Compute the conductance, specific conductance, and equivalent conductance for each dilution of electrolyte investigated.
3. From Table 16 obtain the value of the equivalent conductance at infinite dilution of the electrolyte used and then calculate the conductance ratio $\frac{\Lambda}{\Lambda_0}$ at each concentration.
4. Calculate the constant of Ostwald's dilution law for each dilution, assuming the conductance ratio to be equal to the degree of ionization.
5. Plot specific and equivalent conductances, also the conductance ratios against volumes as abscissas.

[3] Ordinary distilled water is usually not satisfactory for conductivity work on account of the dissolved gases which it contains. If the laboratory distilled water has a specific conductance greater than 3×10^{-6} mhos, it should not be used.

Conductivity water is most readily prepared by treating acidified distilled water for several hours with potassium permanganate and then redistilling it, using a tin or a Pyrex glass condenser. The first runnings should be rejected. The water should be protected against the gases of the laboratory.

EXPERIMENT 38

HYDROLYSIS. CONDUCTIVITY METHOD

Object

To determine degrees of hydrolysis and the hydrolysis constant for anilinium chloride, using the conductivity method.

Discussion

When a salt formed from an anion of a strong acid and the cation of a weak base is dissolved in water, the cations, which are the conjugate acid ions of the weak base, will react with water to form hydronium ions and molecules of the weak base. The anions of the strong acid exhibit little or no tendency to react with the water. Similarly, when the salt of a weak acid and a strong base is dissolved in water, hydrolysis occurs. In this case the partial reversal of neutralization will involve the anion of the weak acid, itself a base, and its conjugate acid, formed by reaction with water.

When anilinium hydrochloride, $C_6H_5NH_3Cl$ is dissolved in water, the chloride ions do not react with the solvent. The anilinium ions take part in the following hydrolysis reaction to form the weak base aniline:

$$\underset{\text{acid}_1}{C_6H_5NH_3^+} + \underset{\text{base}_2}{H_2O} \rightleftarrows \underset{\text{base}_1}{C_6H_5NH_2} + \underset{\text{acid}_2}{H_3O^+}$$

The degree of hydrolysis x, the fraction of each mol of the acid $C_6H_5NH_3^+$ which has been transformed to its conjugate base $C_6H_5NH_2$, may be calculated from conductivity measurements in the following manner:

Let Λ_s represent the equivalent conductance of anilinium chloride solution under conditions such that no hydrolysis has taken place, Λ_h the equivalent conductance when hydrolysis has taken place to a degree x, and $(\Lambda_A + \Lambda_B)$ the equivalent conductance if hydrolysis were complete. Then:

$$x = \frac{\Lambda_h - \Lambda_s}{(\Lambda_A + \Lambda_B) - \Lambda_s} \qquad [1]$$

Λ_h is calculated from measurements of the conductivity of anilinium chloride solutions and Λ_s is obtained from the conductivity of solutions in which the hydrolysis has been almost completely reversed by the addition of an excess of aniline. Λ_A represents the sum of the equivalent ionic conductances of the ions H_3O^+ and Cl^-, and Λ_B the equivalent conductance of the aniline. Because of its small value at the dilutions used, Λ_B may be neglected in the calculations. The values of Λ_A, which is equal to the equivalent conductance of hydrochloric acid, at dilutions of 32, 64, and 128 liters are respectively 393, 399, and 401 mhos.

The hydrolysis constant K_h is calculated as follows:

$$K_h = \frac{x^2}{(1 - x)V} \qquad [2]$$

where V is the volume (liters) which contains one mol of salt.

Since

$$K_h = \frac{K_{H_2O}}{K_B} \qquad [3]$$

(see Experiment 46), it is possible to calculate the constant K_B for aniline, corresponding to the reaction:

$$C_6H_5NH_2 + H_2O \rightleftarrows C_6H_5NH_3^+ + OH^-$$

$$K_w \text{ is } 0.82 \times 10^{-14} \text{ at } 25°$$

Apparatus and Chemicals Required

Thermostat, conductivity apparatus (see Experiment 37), four 10-ml. pipettes labeled "aniline," "anilinium chloride," "anilinium chloride in aniline," and "water."

$M/32$ aniline, $M/32$ anilinium chloride, $M/32$ anilinium chloride in $M/32$ aniline, conductivity water, KCl 0.01 demal solution.

Method of Procedure

The success of this experiment depends absolutely upon the avoidance of contaminating one solution with another. Use the proper pipette for each solution.

Determine the "cell constant" as directed in Experiment 37.

Measure the conductance of anilinium chloride at dilutions of 32, 64, and 128 liters, using conductivity water for making the dilutions.

Measure the conductance of anilinium chloride in $M/32$ aniline at dilutions of 32, 64, and 128 liters, using $M/32$ aniline for making the dilutions.

Calculations

1. Calculate the cell constant.
2. Calculate the equivalent conductance for each of the six measurements.
3. Calculate the hydrolysis constant K_h.
4. Calculate the constant K_B for aniline.

EXPERIMENT 39

TRANSPORT NUMBERS

Object

To determine the transport numbers of the ions Ag^+ and NO_3^-.

Discussion

The transport number of an ion is defined as the ratio of the quantity of electricity carried by that ion to the total quantity carried by both anion and cation. The transport numbers of two given ions are proportional to the velocities of their ionic migrations.

$$n_a = \frac{v}{u + v} \qquad n_c = \frac{u}{u + v}$$

where n_a and n_c are the transport numbers of anion and cation,
v and u are their velocities of ionic migration, respectively.

Since transport numbers are proportional to ionic migrations, they are usually determined from observation on the changes in concentrations in a three-compartment electrolytic cell.

In determining the transport numbers of Ag^+ and NO_3^- a dilute solution of silver nitrate of known concentration is placed in the cell and electrolyzed between silver electrodes. A coulometer in series with the cell enables one to determine the quantity of electricity which has passed. Electrolysis should not be continued long enough to produce any change in concentration in the middle compartment.

After electrolysis, the solutions are withdrawn from the anode and cathode compartments and carefully analyzed for silver.

Basing the calculations upon data secured from the anode solution, one very carefully determines the number of equivalents of silver c_2 in that compartment after electrolysis. Knowing the initial concentration of the silver nitrate solution, he is able to calculate the number of equivalents of silver c_1 originally present. There will be an increase which we will call i equivalents; $c_2 - c_1 = i$. It is obvious that there is also an increase of i equivalents of nitrate ion in this compartment.

During the electrolysis, Ag^+ has been produced from the silver anode. The amount can be calculated from data secured in the coulometer. Call the quantity of silver ion thus produced m equivalents; then $m - i = p$, the number of equivalents of Ag^+ which have migrated out of the anode compartment. We have seen that i equivalents of NO_3^- migrated into the anode compartment.

Hence

$$n_{Ag^+} = \frac{p}{i + p} = \frac{p}{m} \qquad \text{and} \qquad n_{NO_3^-} = \frac{i}{i + p} = \frac{i}{m}$$

One may similarly base his calculations on data secured from concentration changes in the cathode compartment.

Apparatus and Chemicals Required

Transport number cell with silver electrodes, copper coulometer, milliammeter 0–50 ma., adjustable resistance, source of direct current at least 32 volts, switch, copper wire, 2 iron stands, 2 clamps, burette and holder, four 250-ml. Erlenmeyer flasks, crucible tongs, 25-ml. pipette, 50-ml. graduate, wash bottle.

Copper coulometer solution,[1] 0.05 N $AgNO_3$, standard KCNS (1 ml. = 0.005 g. Ag), saturated ferric ammonium sulfate indicator solution containing sufficient HNO_3 to suppress hydrolysis, alcohol, distilled water.

[1] Copper coulometer solution may be prepared by dissolving 150 grams of $CuSO_4 \cdot 5H_2O$ in 1 liter of water, and adding 28 ml. of concentrated sulphuric acid, and 60 ml. of ethyl alcohol.

The apparatus is shown (partly schematically) in Fig. 34. A three-compartment cell as given in the sketch is preferable for the use of beginners, as it offers less opportunity for the introduction of errors in drawing off the contents of the various compartments at the end of the run. A simple

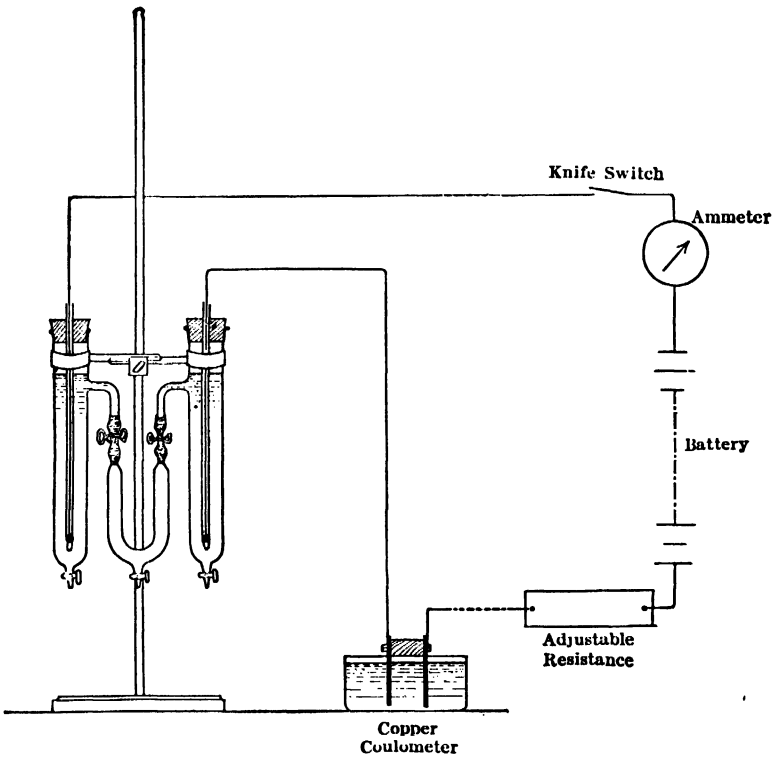

FIG. 34

and efficient copper coulometer may be made from a small crystallizing dish about 2 in. in diameter and 2 square sheets of copper, held in position by brass spring clips attached to a hardwood electrode holder, which rests on the dish as shown in Fig. 35. This construction provides a convenient means of holding the electrodes and does away with the necessity of terminals soldered to the copper sheets. With the three-compartment cell a potential of 32 volts is required to furnish the necessary current.

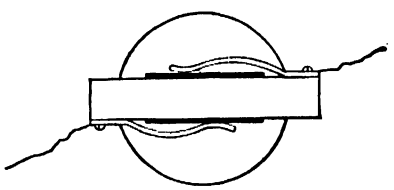

FIG. 35

Method of Procedure

Wash the coulometer cathode with distilled water, then with alcohol. Grasp it with the crucible tongs, and ignite the alcohol adhering to it. The cathode will be warmed sufficiently by the burning alcohol to dry it completely. When it is cool, weigh it accurately to a tenth of a milligram.

After weighing the cathode, clean and dry the two stoppered flasks, marked A and M, and weigh the one marked A to 0.01 g.

While the first student is carrying out the operations directed above, the second should clean and dry the cell, fill it with stock silver nitrate solution, and assemble the apparatus, observing care that the electrical connections are made as per the diagram.

Nearly fill the coulometer with coulometer solution and adjust R to give its maximum resistance.

Close the switch, noting the time, and adjust the resistance to give a current of 0.01 to 0.02 ampere. The duration of passage of current should be 2 hours. During this time, the strength of the current should be held constant.

At the conclusion of the electrolysis, interrupt the current, noting the time, carefully close the pinchcocks, and withdraw the contents of the anode compartment into stoppered Erlenmeyer marked *A*, rinsing the compartment and the anode with a small amount of the original solution from the $AgNO_3$ stock bottle. Open the pinchcock next to the anode compartment and withdraw the contents of the middle compartment into the flask marked *M*, but do not rinse this compartment.

Remove the cathode from the coulometer, rinse it with water, then alcohol, and dry and weigh as before.

Weigh flask *A*, with its contents, to 0.01 g.

While the first student is weighing the flask and cathode, the second should determine the concentrations of silver in the $AgNO_3$ solution in the stock bottle and in the solution in flask *M* by titration with standard KCNS, as follows:

Rinse the 25-ml. pipette with a small portion of the solution to be analyzed, discard this portion, then withdraw a 25-ml. sample of the solution, run it into a 250-ml. Erlenmeyer flask, add 50 ml. of distilled water and 1 ml. of ferric ammonium sulfate solution; then run standard KCNS in from the burette until the first permanent red tint is obtained. Check the result by a second titration.

If the concentrations of Ag^+ in the stock bottle and in the solution from the middle compartment do not agree, diffusion has taken place and the results will be inaccurate.

After weighing, analyze the solution in flask *A* in like manner.

Before leaving the apparatus, see that the clamps and stopcocks are open, so that the cell will drain.

Pour the coulometer solution back into the proper stock bottle.

Calculations

1. From the weight of copper deposited in the coulometer, calculate the weight of silver dissolved from the anode.
2. From the total weight and the analysis of the anode solution, calculate the amount of Ag^+ actually found in the anode compartment, assuming that the density of the dilute solution is unity.
3. From the analysis of the stock solution calculate the quantity of Ag^+ originally present in the anolyte, assuming as before that its density is unity.
4. From the data obtained in 1, 2, and 3, calculate the transference numbers of the two ions.

EXPERIMENT 40

TRANSFERENCE NUMBERS. MOVING BOUNDARY METHOD

In an electrolysis, the total current is measured by the number of faradays of electricity passed through the cell, and the quantity of current carried by ions of a given kind is equal to the number of equivalents of the ions transferred during the time of passage of the current. The transference number of an ion, as defined in Experiment 39, is the ratio of the quantity of electricity carried by that ion to the total quantity of electricity passed through the cell.

In the method of Longsworth [1] for the determination of transference numbers, the equivalents of a specified ion transferred are determined from measurement of the velocity of a moving boundary between two solutions, the motion being caused by migration of the ions under the force of

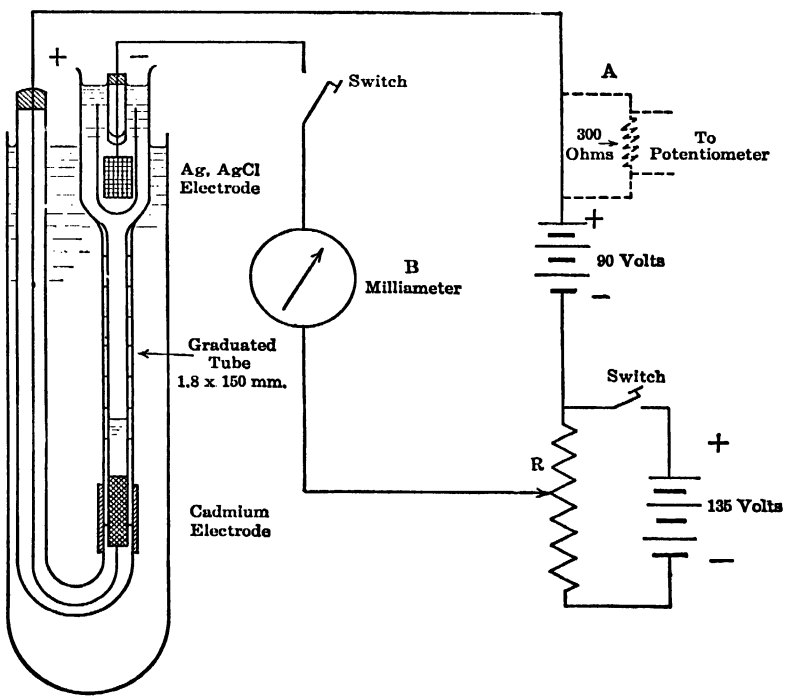

FIG. 36.

an electrical field. If the total number of faradays of electricity passed is known, the transference number of the migrating ions may be calculated.

A moving boundary cell for the determination of the transference number of potassium ions in a potassium chloride solution is shown in the diagram in Fig. 36. A cadmium electrode is inserted at the base of a graduated narrow glass tube having a calibrated volume. The upper part of the tube is enlarged to carry a chamber in which a silver chloride electrode is placed. The tube is filled with a solution of 0.1 N potassium chloride and current is passed through the cell, the cadmium being made the positive electrode in the solution. The current through the cell is obtained from "B" batteries and is controlled by a rheostat R connected as shown in Fig. 36. The current

[1] *Longsworth, J. Chem. Educ.*, **11**, 420 (1934).

is maintained at a constant value throughout the experiment. When current flows through the cell, cadmium ions are formed at the cadmium electrode and migrate up the tube. The potassium ions also move up the tube, and a definite boundary is formed between the layer containing cadmium ions and the layer containing potassium ions. The movement of the boundary as the electrolysis progresses may be followed visually because of difference in refractive index between the two solutions. Diffusion of cadmium or potassium ions across the boundary does not occur on account of the higher potential gradient in the cadmium chloride solution. The electrical resistance of the cadmium chloride solution is greater than that of the potassium chloride solution. Since equal currents are flowing through the two solutions, according to Ohm's law the potential drop in the cadmium chloride solution is the greatest. The mobility under equal potential gradients is greater for potassium ions than for cadmium ions. For this reason any potassium ions which might fall back into the cadmium chloride layer would be speeded up in the higher potential gradient existing there and would return to their own layer. Any cadmium ions which might enter the layer of potassium chloride would be in a region of lower potential gradient and would lose speed until they fell behind the potassium ions.

The current I passing through the tube is measured and the time t which the boundary takes to pass through the volume v in the tube is noted. The equivalents of potassium ion transferred are then equal to vC, where C is the concentration of potassium ions expressed in equivalents per unit volume. The total quantity of electricity passed in the time required for the boundary to sweep through the measured volume is equal to $\frac{It}{\mathscr{F}}$, where $\mathscr{F}$ is the faraday, 96,500 coulombs. From the definition of the transference number n given above,

$$n_{K^+} = \frac{vC\mathscr{F}}{It}$$

The current passing through the cell may be calculated from the potential drop across an accurately known series resistor or may be measured directly by means of a sensitive milliammeter. The second method is more convenient, though capable of less accuracy.

Apparatus and Chemicals Required

Moving boundary apparatus as shown in Fig. 36, one 90-volt and one 135-volt B battery, two single pole switches, one 10,000-ohm resistance with potential tap, one 0–10 milliammeter or one 300-ohm calibrated fixed resistor, and a potentiometer and accessories, one timing device, necessary insulated wire, one 65- × 500-mm. test tube for water bath.

0.1 N KCl solution, chromic acid cleaning solution, cadmium metal.

Method of Procedure

Clean the graduated tube of the moving boundary apparatus, using chromic acid cleaning solution, and rinse several times with distilled water. When the tube is clean, pour through it some of the 0.1 N potassium chloride solution provided, insert the cadmium electrode, and close the joint with rubber tubing, as shown in Fig. 36. Place the electrode cup in the enlarged end of the moving boundary tube and add 0.1 N KCl solution until the head of the liquid has risen above and filled the electrode cup and until it stands approximately 1 cm. above the edge of the electrode cup. The purpose of the cup is to prevent the diffusion into the tube of the dense potassium chloride solution formed about the silver-silver chloride electrode as the electrolysis proceeds. Care should be taken that no air bubbles stick to the side of the graduated tube or remain on the surface of the cadmium electrode. Such clinging bubbles may be removed by pushing a narrow glass rod up and down in the graduated tube until any air present is forced out and the solution uniformly wets the electrode and the tube.

Clamp the silver-silver chloride electrode in place in the cup. The electrode may be prepared by plating a platinum gauze electrode of more than one square centimeter surface with a heavy

coat of silver.[2] A portion of the silver is changed to the chloride by electrolysis in hydrochloric acid solution, the electrode being made the anode. The electrode should be protected from light as much as possible.

When the moving boundary apparatus is assembled and filled, lower it into the large test tube filled with water; this serves to dissipate the heat developed during the electrolysis and to prevent convection currents from arising in the tube.

A potentiometer may be used as indicated (*A*, Fig. 36), to measure the potential difference across the calibrated resistor. If this method of determining the current is used, the potentiometer wiring should be checked and the instrument should be standardized in the usual fashion. The current should be kept at a constant value during the electrolysis. With a cell of dimensions shown in Fig. 36, 4 milliamperes give a satisfactory rate of movement. This is accomplished by applying sufficient electromotive force to the cell at the beginning to start the electrolysis at the desired current. The potentiometer is at once balanced against the potential drop across the calibrated resistor. When the galvanometer needle indicates that the potentiometer has become unbalanced, the voltage applied to the moving boundary cell is increased (or diminished) by movement of the controlling rheostat until the galvanometer needle shows again no deflection. If a sensitive milliammeter (*B*, Fig. 36) is used to measure the current, the voltage should be adjusted at the beginning of the electrolysis so that the needle of the meter is exactly above a division mark near the desired current reading. The voltage applied should be regulated so as to keep the current constant. Because of the increasing length of the column of cadmium chloride formed, the applied voltage must be continually increased as the boundary moves.

If the tube is illuminated with a diffused light and viewed against a white background, the boundary between the solutions may be seen as a thin, dark line moving up the tube. The optical effect is caused by the sharp change of refractive index at the boundary. It may be helpful to view the boundary against a white card with a black line which will appear distorted behind the boundary. The boundary is most easily detected when the electrolysis begins, as it forms just above the cadmium electrode.

The time at which the boundary crosses the first graduated line on the tube and the time at which it sweeps past each successive graduation should be noted and recorded. Care must be taken to keep the current constant. The value of the current used should be recorded, and also the volume of the tube between each graduation line.

After the boundary has passed several graduations stop the electrolysis by opening both switches. The silver-silver chloride electrode should be removed and the moving boundary tube emptied. The apparatus should then be rinsed with distilled water, reassembled, and left full of distilled water.

Calculation

Using the average time required for the boundary to sweep through the volume contained between two divisions on the graduated tube, the concentration of the potassium chloride solution, and the current passing through the tube, calculate the transference number of potassium ions in the solution.

[2] Directions for plating are given in Experiment 42.

EXPERIMENT 41

ELECTROMOTIVE FORCE

Object

To measure the electromotive force of reversible galvanic cells and to determine standard electrode potentials of half cells.

Discussion

Electromotive forces may be developed when two different phases are brought in contact. This will occur when the free energies of the substances existing in some form in both phases are not equal on both sides of the boundary, provided the substances crossing the boundary are electrically charged. The contact between a metal and a solution containing ions of that metal and the contact between two solutions of different concentrations containing the same ion are examples.

Electrodes containing such phase contacts may be constructed and combined to form galvanic cells. Current flows through the cells and chemical reactions take place spontaneously when the electrodes are connected through an external conductor. Although in many valuable cells the reactions taking place are irreversible, "reversible" cells of great theoretical as well as practical interest may be set up. A cell is said to be reversible if, when an infinitesimally greater opposed electromotive force is applied to the cell, the reaction which takes place when the cell is operating spontaneously is reversed and current flows through the cell in a reverse direction. When the external electromotive force is decreased infinitesimally, the normal direction of the current and cell reaction are restored.

When a cell is operating reversibly at constant temperature and pressure, and only infinitesimal currents are flowing, the electrical work done by the cell is the maximum useful work, since any work done by the cell as a result of volume changes against the atmosphere is not available. The electrical work is equal to the number of coulombs of electricity passing through the cell times the electromotive force at which the cell operates, or

$$w_e = En\mathscr{F} \qquad [1]$$

where w_e is the electrical work,
E is the electromotive force,
n is the number of faradays,
$\mathscr{F}$ is the faraday or 96,500 coulombs.

Since the free energy of a system is a measure of its energy available for useful work, the decrease in free energy $-\Delta F$ is equal to the electrical work done by the cell, w_e, or

$$-\Delta F = En\mathscr{F} \qquad [2]$$

For a typical cell reaction

$$aA + bB \rightleftarrows cC + dD$$

in which a and b are the mols of the reactants A and B and similarly for C and D,

$$-\Delta F = RT \log_e K - RT \log_e \frac{(a_C)^c(a_D)^d}{(a_A)^a(a_B)^b} \qquad [3]$$

where R is the gas constant,
T the absolute temperature,
a the activity or effective concentration for the substance indicated by the subscript.

From equations 2 and 3, for cells so constructed that the only source of the electromotive force is the chemical change taking place

$$E = E^0 - \frac{RT}{n\mathscr{F}}\log_e \frac{(a_C)^c(a_D)^d}{(a_A)^a(a_B)^b} \qquad [4]$$

where E^0 is a constant equal to $\frac{RT}{n\mathscr{F}}\log_e K$. From the relation with ΔF, the sign of E is positive when the reaction is spontaneous in the direction as written.

For the experimental study of single electrode potentials, reversible cells may be constructed by connecting two reversible half cells through a highly conducting salt solution, a "salt bridge." Such a bridge furnishes electrical connection and minimizes junction potentials which arise because of the transfer of ions across the solution junctions. If junction potentials can be neglected, the potential difference between the two external electrodes of the cell is the sum of the electromotive forces of the two half cells, and the cell reaction is the sum of the reactions taking place in the half cells.

For a half cell in which the reaction is of the type:

$$ne + aA \rightarrow bB \qquad [5]$$

where n is the number of electrons used to form b mols of B from a mols of A,

$$E = E^0 - \frac{RT}{n\mathscr{F}}\log_e \frac{(a_B)^b}{(a_A)^a} \qquad [6]$$

When the activities of both reactants and products of the cell reaction are unity, then $E = E^0$. The values of E^0 for half cells are called "standard electrode potentials." Since there exists no unquestioned method of determining absolute electrode potentials corresponding to half-cell reactions, potentials are commonly stated with respect to some standard electrode. The half-cell or "electrode" potential is then calculated from the potential of the cell formed by combining the unknown half cell with the standard half cell. The sign and the value of the standard are determined by convention. Several conventions are in use.

A widely used standard is the hydrogen half cell, constructed so that the cell reaction is

$$H^+_{(a=1)} + e \rightleftarrows \tfrac{1}{2}H_{2(g)(a=1)} \qquad [7]$$

The value of E^0 for this reaction is taken as 0 at all temperatures. The sign of E for a single electrode is taken as positive if electrical measurements show that it is positive with respect to the standard hydrogen electrode, and negative if it is negative with respect to the standard. The half-cell reaction corresponding to the sign thus determined is written as one in which electrons are reactants, even if the actual reaction is the reverse in the cell made up with the standard hydrogen electrode. The sign thus determined is for a reduction reaction and the potential is the standard reduction potential.

For example, a cell may be made up of a zinc half cell, consisting of a metallic zinc electrode dipping into a solution of zinc ions at unit activity, combined with a standard hydrogen electrode through a salt bridge at 25°. On testing with a potentiometer, the zinc electrode is found to be negative with respect to the hydrogen, and the electromotive force of the combination is found to be 0.7618 v. According to the conventions described, with the junction potentials at the salt bridge neglected, the value of E^0 for the zinc electrode, the standard reduction potential, is thus -0.7618 v., corresponding to the reaction:

$$\tfrac{1}{2}H_{2(g,\,1\,atm.)} + \tfrac{1}{2}Zn^{++}_{(a=1)} \rightarrow \tfrac{1}{2}Zn + H^+_{(a=1)} \qquad [8]$$

The free energy change per equivalent of Zn, calculated from the value of E^0, is +35,176 cal. The positive value of ΔF indicates that the zinc reduction reaction written above is not spontaneous when the electrode is combined with the standard hydrogen half cell, and that in the cell the zinc metal is spontaneously being oxidized to zinc ion.

In measuring potentials of half cells, it is not necessary to use a standard hydrogen electrode directly as a reference. A combination may be made with any single electrode whose potential with respect to hydrogen is known. The unknown electrode potential may then be calculated by adding the potential of the secondary standard to the potential of the whole cell, the sign of which has been taken as the same as the sign of the unknown electrode as determined by the potentiometer.

A number of standard electrode (reduction) potentials are given in Table 18, based on the standard hydrogen electrode as 0.

Reference Electrodes

The standard hydrogen half cell is prepared by dipping a platinum wire covered with a coating of colloidal platinum [1] into a solution of hydrochloric acid in which the activity of hydrogen ions is 1, and bubbling hydrogen gas at 1 atmosphere pressure over the electrode so that it is alternately covered with gas and wet with solution.

A more convenient and widely used secondary standard, which is reproducible and reversible, is the calomel half cell. The reaction which takes place in it is given by the equation:

$$Hg_2Cl_2 + 2e \rightleftarrows 2Cl^- + 2Hg$$

It is constructed by placing a layer of mercury in a suitable vessel, such as (*a*) or (*b*) in Fig. 37, covering it with a layer of paste made by grinding mercury and calomel together with potassium

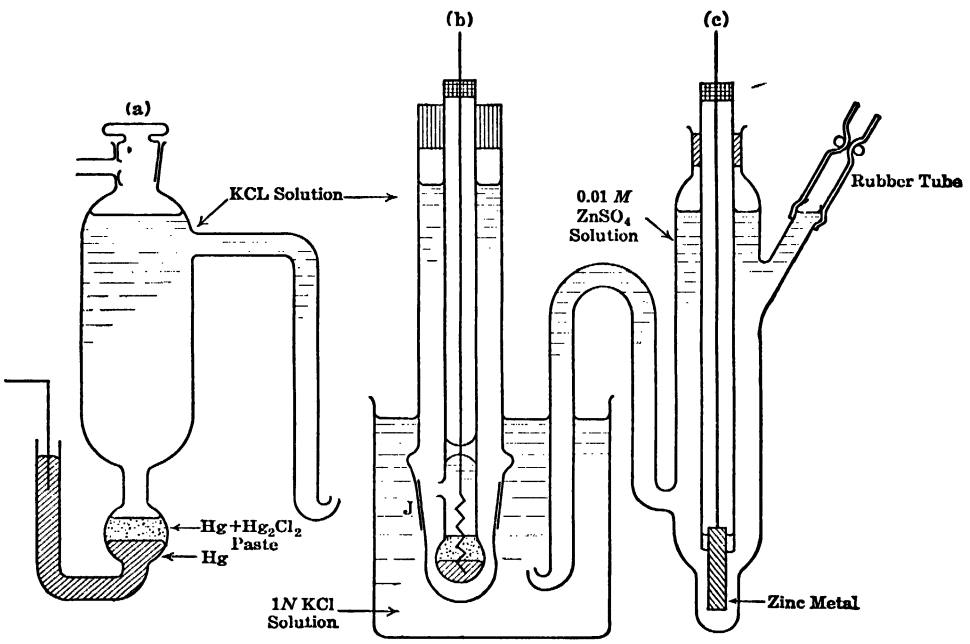

FIG. 37

chloride solution of the proper strength, and finally adding a layer of the potassium chloride solution, saturated with calomel. As external electrode a platinum contact is inserted in the mercury and contact with other half cells is made at a solution interface. Mercury may be purified by spraying it through dilute nitric acid solution, washing with distilled water, and distilling at low pressure, while a fine stream of air bubbles is passed through the mercury. A grade of calomel sufficiently pure for ordinary work can be obtained commercially. For highly accurate work, calomel should be freshly made by precipitation from a nitric acid solution containing dissolved mercury, with

[1] For details of preparation, see Experiment 43.

mercury in excess, on the addition of hydrochloric acid. Thorough, repeated washing by decantation should follow. Electrolysis of mercury by direct current in 1 N hydrochloric acid gives an excellent product in which the calomel and mercury are intimately mixed. The tip of the electrode vessel of type (a), Fig. 37, is turned up if the potassium chloride solution used in the electrode is more dense than the solution into which the tip dips. Type (b) is very convenient for general laboratory use, the wet ground-glass joint at J serving to permit passage of current and at the same time to hinder diffusion.

Concentrations of 1 N, 0.1 N, and saturated potassium chloride are used widely in the preparation of calomel half cells. The saturated calomel electrode is most easily prepared but has the largest temperature coefficient (Table 19).

Measurement of Electromotive Force

In order to measure the electromotive force of a cell under conditions such that only infinitesimal currents are flowing and the cell is operating reversibly, the Poggendorf compensation method or its modifications may be used. A variable known electromotive force is opposed to that of the cell being studied and is varied until no current flows in the common system, as indicated by a null instrument included in the circuit.

The potentiometer is a satisfactory instrument for use as a source of known potential difference. This instrument, the use of which is shown in Fig. 38, consists essentially of a uniform resistance

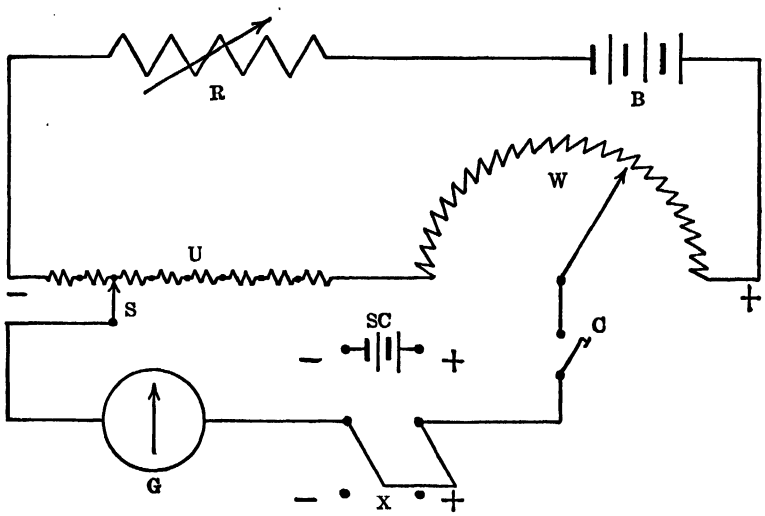

FIG. 38

wire W, wound on a drum and supplemented by a set of unit resistances U in series with the wire. The resistance of each coil is usually made equal to that of the wire. When a current of definite value is passed through the whole set of resistances, there is a known drop in potential along any chosen interval. The current is supplied from a steady source B, a storage battery or dry cells in series, and is regulated by a variable resistor R in series. By manipulation of a selector switch S and by movement of a contact C along the drum wire, potential differences of any desired value may be tapped off, as limited by B and R, the source and the controlling resistor.

When the potentiometer is used to measure an unknown electromotive force, such as X in Fig. 38, the unknown is balanced against a known potential difference tapped off and opposed to it from the potentiometer. Before making a reading, the value of the current within the potentiometer must be adjusted to the proper value. This is done by connecting a standard cell (of known electromotive force) SC in place of the source to be measured X, setting the potentiometer to the value of the standard and adjusting the potentiometric circuit current by means of the resistor R until the galvanometer G (or other null instrument) gives a zero deflection.

The Weston standard cell is widely used because its electromotive force is reproducible and it has a low temperature coefficient. The cell consists of an H-shaped vessel with sealed-in platinum electrodes, one arm of which contains a layer of mercury covered with a paste of mercurous sulfate and mercury. In the other arm is placed an amalgam, 12.5 per cent of which is cadmium. The cell is filled with saturated cadmium sulfate solution and an excess of cadmium sulfate crystals. A portable, unsaturated cell similar to the one described above, except that the cadmium sulfate solution is saturated at 4° and contains no cadmium sulfate crystals, is commonly used as a working standard. Its electromotive force is about 1.0186 volts and its temperature coefficient is negligibly small. The value for a particular cell should frequently be checked against a laboratory standard. The value of the electromotive force of the saturated standard cell is given by

$$E_t = 1.01830 - 4.06 \times 10^{-5}(t - 20) - 9.5 \times 10^{-7}(t - 20)^2 + 1 \times 10^{-9}(t - 20)^3$$

Apparatus and Chemicals Required

Potentiometer ("student" type), auxiliary keys, switches, wire, galvanometer, calomel half cell, standard cell, dry cells or storage battery, mortar and pestle, 4-mm. glass tubing, electrode vessels, electrodes of zinc, cadmium, and silver, two 150-ml. beakers, one 250-ml. beaker, ring stands and clamps.

Solutions of 0.01 *M* and 0.1 *M* $ZnSO_4$, 0.1 *M* $CdCl_2$, 0.01 *M* $AgNO_3$, and 1 *N* KCl, purified mercury, Hg_2Cl_2.

Method of Procedure

Connect the units of the potentiometer system[2] according to the diagram supplied by the maker of the instrument used, or check the wiring if connections have already been made. Study the circuit until it is clearly understood which parts perform the functions shown in Fig. 38. Prepare a 1 *N* calomel electrode and allow it to stand for at least one hour before using. The paste of mercurous chloride, mercury, and 1 *N* potassium chloride required may be transferred to the container with a 4-mm. glass tube used as a pipette. After the electrode is prepared it should be kept with the tip dipped into a 1 *N* KCl solution when not in use.

Close the neck of an electrode vessel with a zinc electrode thrust through a stopper (Fig. 37). After dipping the side tube into a 50-ml. beaker of 0.01 *M* zinc sulfate solution, fill the vessel by applying suction to the rubber tube on the side tap. When the vessel is full, the clamp on the rubber tube should be securely closed, except when it is desired to flush the side neck by allowing the solution to flow out. Care should be taken when cleaning or handling the electrodes not to bend them, as strains in the metal will affect the electromotive force.

(*a*) The following cell (Fig. 37) is then set up: Zn, $Zn^{++}_{(0.01M)}$, 1 *N* KCl, calomel electrode. Dip the tip of the zinc half-cell side tube and that of the calomel half cell into a small beaker containing 1 *N* potassium chloride solution. Determine the sign of the zinc electrode and measure the e.m.f. of the cell with the potentiometer, checking against the standard cell before and after the measurement. The sign may be found by making use of the fact that the e.m.f. of the cell must be opposed to that supplied by the potentiometer if a balance is to be obtained. Determine by trial what connections will enable a balance to be made, exchanging the electrode connections if the galvanometer needle deflects in one direction only over the range of the potentiometer. When the electrodes are properly connected and a balance is made, the sign of each electrode of the cell is the same as that of the corresponding lead from the potentiometer. Care should be taken at all times to tap the galvanometer key very lightly so as to draw only small currents from the cell. The protective resistance in series with the standard cell should be switched out only when the system is almost balanced. Passage of current will change the concentrations at the electrode and "back e.m.f." or polarization effects will be produced. Room temperature should be recorded when the measurements are made.

Find the signs of the electrodes and measure the values of the e.m.f. for the following cells, set up in a manner similar to the one described above:

[2] A typical set of connections is shown in Fig. 39.

(*b*) Zn, $Zn^{++}_{(0.1M)}$, 1 *N* KCl, calomel electrode.
(*c*) Cd, $Cd^{++}_{(0.1M)}$, 1 *N* KCl, calomel electrode.
(*d*) Ag, $Ag^{+}_{(0.01M)}$, 1 *N* KCl, calomel electrode.
(*e*) Ag, $Ag^{+}_{(0.01M)}$, 1 *N* KCl, $Cd^{++}_{(0.01M)}$, Cd.

Calculations

1. Calculate the value of the standard electrode potentials E^0 for the zinc, the cadmium, and the silver half cells, using the data obtained in (*a*), (*b*), (*c*), and (*d*), room temperature, and the values of γ given below.

2. Write the cell reaction for the cell used in (*e*), made up of a silver and a cadmium half cell. From the signs of the electrodes, determine in which direction the reaction is proceeding when the cell is operating spontaneously. Calculate the free energy change per mol of reactants for the reaction as written and the equilibrium constant of the reaction.

The following are the activity coefficients γ of the solutions used above for temperatures near 25°.

$ZnSO_4$	0.01 *M*	$\gamma = 0.387$
$ZnSO_4$	0.001 *M*	$\gamma = 0.700$
$CdSO_4$	0.01 *M*	$\gamma = 0.404$
$AgNO_3$	0.01 *M*	$\gamma = 0.902$

EXPERIMENT 42

ELECTROMOTIVE FORCE; CONCENTRATION CELLS

Object

To measure the electromotive force of concentration cells, to determine the effective concentration of silver ion in a silver nitrate solution, and to determine the solubility of AgCl.

Discussion

If two electrodes of the same kind are prepared and one is immersed in each of two solutions which differ only in concentration of solute, and if the liquids are electrically connected, a concentration cell is formed. Such a cell has an electromotive force which at constant temperature depends on the nature of the liquid junction and on the difference of concentration between the two solutions. The liquid junction potential may be practically eliminated in many cases by forming the junction by means of a tube filled with concentrated potassium chloride solution. The difference between the potentials at the two junctions of the cell solutions with the salt bridge solution is least when the concentration of the salt bridge is high and when the mobilities of the positive and negative ions of the bridge are equal. These conditions are approximately met by a saturated potassium chloride solution.

The following concentration cell, where a_1 and a_2 are the activities of the silver ions and a_1 is less than a_2, may be set up:

$$\mathrm{Ag,\ Ag^+}_{(a_1)} \mid \text{KCl salt bridge} \mid \mathrm{Ag^+}_{(a_2)},\ \mathrm{Ag}$$

Assuming that the salt bridge makes the junction potential negligible, the electromotive force depends on the tendency of silver ions to diffuse from the solution in which their effective concentration is greatest into the one in which their activity is the smallest. In the cell, if the following reactions take place, such diffusion effectively occurs:

$$\mathrm{Ag} \rightarrow \mathrm{Ag^+}_{(a_1)} + e$$

$$\mathrm{Ag^+}_{(a_2)} + e \rightarrow \mathrm{Ag}$$

The net cell reaction is

$$\mathrm{Ag^+}_{(a_2)} \rightarrow \mathrm{Ag^+}_{(a_1)}$$

Since equilibrium is reached only when the activities are equal, when the equilibrium constant is 1, the value of E^0 for the reaction is 0, and the electromotive force of the cell is given by (Experiment 41):

$$E = -\frac{RT}{n\mathscr{F}} \log_e \frac{a_1}{a_2}$$

The free energy change corresponding to this reaction $-En\mathscr{F}$ is the free energy of transfer of one mol of silver ion from an infinitely large amount of solution at an activity of a_2 to an infinitely large amount of solution at an activity of a_1. Since passage of current through the cell will result in changes of concentration of the electrode solutions, it is important to use a balancing method of measuring the potential, as described in Experiment 41.

From measurement of the electromotive force of a cell such as the one described, the effective concentration of an ion in a given solution may be found if its concentration in another is known.

Apparatus and Chemicals Required

Potentiometer and accessories, silver electrodes, one 50-ml. and one 100-ml. beaker, thermometer, 0–50°.

0.01 N $AgNO_3$, 0.1 N $AgNO_3$, 0.1 N KCl, 1 N KCl solutions.

The wiring diagram for a "student" type of potentiometer is shown in Fig. 39 and the concentration cell assembly in Fig. 40.

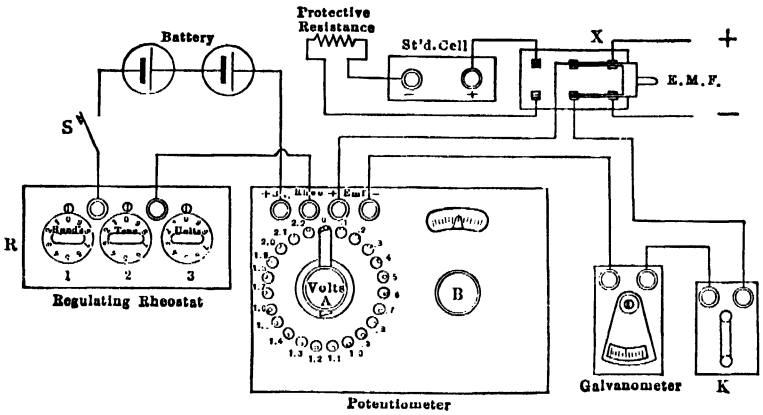

Fig. 39

Method of Procedure

A. Determination of the Activity of Silver Ions in a Solution of 0.1 M $AgNO_3$. Set up the following cell, as shown in the diagram in Fig. 40,

$$Ag,\ Ag^+_{(0.01M)}\ |\ 1\ N\ KCl\ |\ Ag^+_{(0.1M)},\ Ag$$

In arranging the concentration cell, place the more concentrated solution in position L, normal KCl in the 50-ml. beaker, and the more dilute solution in position R.

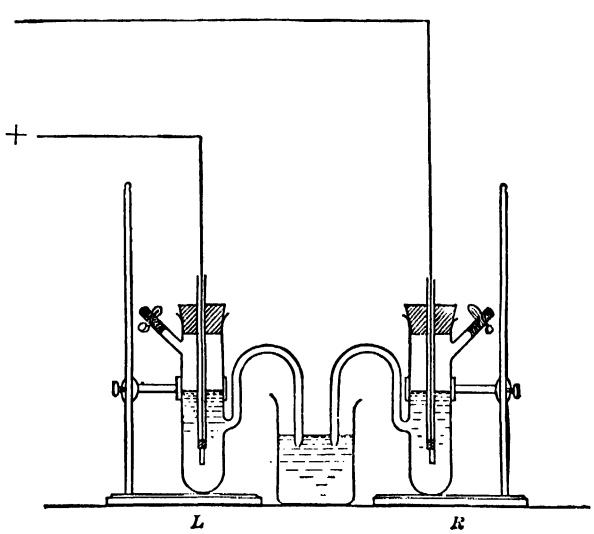

Fig. 40

Since massive metals tend to give unreliable results, the silver electrodes should, prior to use, be given a thin coating of electrodeposited silver. This may be applied from a cyanide plating bath made up to contain 1.5 g. $AgNO_3$ and 1.5 g. NaCN per 100 ml. of solution. Several electrodes should be kept short-circuited in dilute $AgNO_3$ to preserve uniformity.

Measure the electromotive force of the cell, using the potentiometric method as described in Experiment 41; also measure the temperature of the cell.

Record the observations.

B. Determination of the Solubility of Silver Chloride. In the presence of solid AgCl, the concentration of the Ag^+ ion is very small. If the concentration of the silver ion is measured in a solution of known chloride ion concentration, the solubility product, $(a_{Ag^+})(a_{Cl^-}) = K_s$, may be calculated, and from K_s the solubility of AgCl in a saturated solution of AgCl in pure water, in which the silver and the chloride ion concentrations are equal and in which the activity coefficient can be taken as 1. The solubility of silver chloride is equal to $K_s^{1/2}$.

Set up the following cell

$$\mathrm{Ag},\ (\mathrm{Ag}^+_{(M=x)},\ \mathrm{Cl}^-_{(M=0.1)})\ \mid 1\ N\ \mathrm{KCl}\ \mid \mathrm{Ag}^+_{(M=0.01)},\ \mathrm{Ag}$$

The electrode at the left is prepared by adding a few drops of 0.1 M $AgNO_3$ solution to an electrode vessel filled with 0.1 M KCl and inserting a solid silver electrode. Measure and record the electromotive force and the temperature of the cell.

Calculations

In the calculations the liquid junction potentials may be assumed to be eliminated by the salt bridge, and the activity may be taken as the product of the molar concentration and the activity coefficient of the dissolved salt. The following values of γ at 25° should be used; for 0.01 M $AgNO_3$, $\gamma = 0.90$; for 0.1 M KCl, $\gamma = 0.77$.

1. From the electromotive force of the cell measured in (*a*), calculate the value of γ and the activity of silver ion in the 0.1 M solution of $AgNO_3$.

2. Calculate the solubility product of silver chloride and the solubility of silver chloride in pure water from the observations in (*b*).

3. From the electromotive force of the cell in (*a*), calculate the free energy of transfer of one mol of silver ion from a solution in which the molarity of $AgNO_3$ is 0.1 to a solution in which the molarity is 0.01, assuming sufficient amounts of the solutions so that their concentration is effectively unchanged.

EXPERIMENT 43

ELECTROMETRIC ANALYSIS: POTENTIOMETRIC TITRATION

Object

To determine the concentration of ions and to find the equivalence point in titrations by means of the measurement of electrode potentials.

Discussion

When an inert electrode, such as a platinum electrode, is placed in a solution in which a reaction involving the transfer of an electron may take place, the electrode assumes a charge. For instance, when hydrogen gas is passed over an electrode of platinum foil, covered with platinum black and immersed in a solution containing hydrogen ions, an electrical potential is developed between the solution and the electrode. The following reaction tends to take place at the electrode:

$$\tfrac{1}{2}\,H_{2(a_{H_2})} \rightleftarrows H^{+}{}_{(a_{H^+})} + e \qquad [1]$$

where a_{H_2} and a_{H^+} are the activities or effective concentrations of hydrogen gas and hydrogen ions respectively. According to the general equation given in Experiment 41, the oxidation potential of this electrode is given by:

$$E = E^0 - \frac{RT}{\mathscr{F}} \log_e \frac{a_{H^+}}{(a_{H_2})^{1/2}} \qquad [2]$$

The value of E^0 for this reaction is taken as zero. Assuming the activity of the hydrogen gas to be equal to the pressure expressed in atmospheres and letting $p\text{H} = -\log a_{H^+}$, at 25° and 1 atmosphere pressure the above equation becomes

$$E = 0.0591\, p\text{H}$$

When the hydrogen electrode is used in the determination of pH it is usually combined with a calomel electrode (Fig. 41) to form a cell in which the hydrogen electrode is the negative pole. The e.m.f. of the cell at 25° is:

$$E = 0.0591\, p\text{H} + E \text{ calomel}$$

When a normal calomel electrode is used at 25°:

$$p\text{H} = \frac{E - 0.2810}{0.0591} \qquad [3]$$

where 0.2810 is the e.m.f. of the normal calomel electrode at 25°.

Various constructions of the hydrogen electrode are in use. In one form, of general utility, the platinum electrode and lead are enclosed in a glass tube having an inlet tube for hydrogen gas and openings near the base at the level of the platinum foil for exit of the gas. As the hydrogen bubbles through, the electrode is alternately wet with solution and covered with gas. Such a hydrogen electrode H is shown in Fig. 41.

Before use the electrode is cleaned with chromic acid cleaning solution and washed repeatedly in distilled water. It is then immersed in a 2 per cent solution of platinic chloride in HCl containing a trace of formic acid and is made the cathode in an electrolysis cell in which the anode is another plate of platinum. The current may be supplied from two $1\frac{1}{2}$-volt dry cells in series. After a thin

black film is deposited, the electrodes are removed and the electrolysis continued in a dilute solution of sulfuric acid in order to saturate the film with hydrogen. The electrode should be washed and stored in distilled water when not in use.

Purified hydrogen must be used, since the electrode is easily poisoned and since the presence of oxygen would affect the e.m.f. developed. Hydrogen gas from a tank may be passed through wash bottles containing solutions of alkaline pyrogallol, of mercuric chloride, and of sodium hydroxide, and finally through two bottles filled with distilled water. If a Kipp generator is used, arsenic free zinc and acid should be employed.

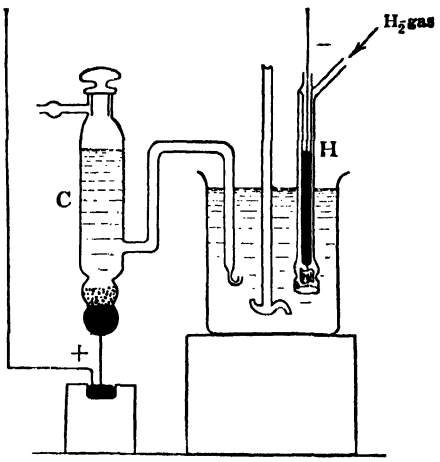

FIG. 41

When a platinum electrode is dipped into a solution containing both ferrous and ferric ions, it acquires a charge, since the following oxidation-reduction reaction, involving an electron transfer, may take place:

$$Fe^{+++} + e \rightleftarrows Fe^{++}$$

The reduction potential of this electrode is given by

$$E = E^\circ - \frac{RT}{\mathscr{F}} \log_e \frac{a_{Fe^{++}}}{a_{Fe^{+++}}} \qquad [4]$$

Similarly, an e.m.f. is developed when a platinum electrode is dipped in a solution containing cerous and ceric ions, which may react as follows:

$$Ce^{++++} + e \rightleftarrows Ce^{+++}$$

The ceric-cerous reduction potential is:

$$E = E^\circ - \frac{RT}{\mathscr{F}} \log_e \frac{a_{Ce^{+++}}}{a_{Ce^{++++}}} \qquad [5]$$

If a solution of ferrous ions is titrated with a solution of ceric ions, the following reaction will occur:

$$Fe^{++} + Ce^{++++} \rightleftarrows Fe^{+++} + Ce^{+++}$$

As may be calculated from the values of E° for the cerous ceric and ferrous ferric electrodes as given in Table 18, E° for the cell having the above reaction is 0.81, ΔF^0 has a large negative value, and

$$K = \frac{a_{Fe^{+++}} \cdot a_{Ce^{+++}}}{a_{Fe^{++}} \cdot a_{Ce^{++++}}} = 10^{13.7}$$

The ceric ions will thus effectively be all reduced to cerous ions, and an equivalent amount of ferric

ions will be formed when each addition of ceric ions is made. At equilibrium the electromotive force of the two oxidation-reduction systems in the solution will be equal and a platinum electrode placed in the solution will have an e.m.f. which satisfies equations 4 and 5 above.

During the titration, as long as the ceric ion is not in excesss, the e.m.f. of the electrode will be near $E°$ for the ferrous-ferric electrode, as modified by the changing ferrous-ferric ion ratio (equation 4). As one approaches the equivalence point, after sufficient reagent has been added to oxidize practically all of the ferrous ion, the potential of the electrode rises rapidly to a value near $E°$ for the cerous-ceric system, as modified by the changing cerous-ceric ratio after the ceric ion is in excess (equation 5). The equivalence point in the titration may be found from an inspection of a graph in which the e.m.f. of the electrode is plotted against the total volume of reagent added.

A simplified potentiometer may be used to measure the e.m.f. of a cell with an accuracy sufficient for the determination of the equivalence point in a titration. In the type shown in Fig. 42, a $1\frac{1}{2}$-volt dry cell is used to produce a uniform potential drop along a slide wire resistor having a potentiometer tap. By proper variation of the position of the sliding contact of the resistor, any

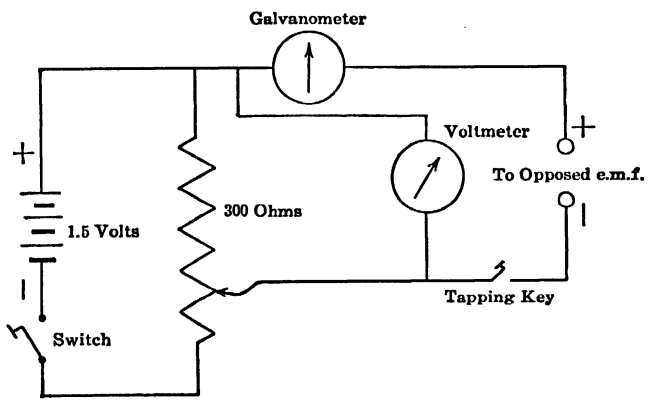

FIG. 42

desired potential up to $1\frac{1}{2}$ volts may be tapped off and applied to the electrodes of the hydrogen-calomel cell opposing its e.m.f. The slide-wire tap is adjusted until a galvanometer in series gives no deflection, indicating that the cell potential and the applied potential are equal. The voltage is read from a voltmeter connected in parallel. The introduction of a voltmeter causes a slight error in the measurement on account of the current passing through the meter.

If desired the student potentiometer described in Experiment 41 may be used to obtain more accurate data.

Apparatus and Chemicals Required

Hydrogen electrode, normal calomel electrode, bright platinum wire electrode, 300-ohm slide-wire resistor with sliding tap, $1\frac{1}{2}$-volt dry cells, voltmeter reading to 1.50 volts in hundredths, galvanometer, tapping key, single-pole single-throw switch, connecting wire, tank of hydrogen gas or Kipp generator, gas-washing train, motor and stirring device, two 50-ml. burettes, 150-ml. beaker, 25-ml. pipette, clamps and iron stand, 25-ml. graduated cylinder.

Solutions of 0.1 N HCl, CH_3COOH, NaOH, NH_4OH, and Na_2CO_3, and methyl orange and phenolphthalein solutions, solutions of 0.1 N $Ce(SO_4)_2$ and 0.1 N $FeSO_4 \cdot (NH_4)_2SO_4 \cdot 6\ H_2O$.

Method of Procedure

A. ACID-BASE TITRATION. Pipette 25 ml. of 0.1 N NaOH into a 150-ml. beaker and add 25 ml. of distilled water and two drops of phenolphthalein solution. Fill a 50-ml. burette with 0.1 N HCl Immerse the hydrogen electrode and the side arm of the calomel electrode in the solution, as shown in Fig. 41. After lowering the stirrer into the solution, start the motor. Open the valve of the tank or stopcock of the Kipp generator and slowly increase the pressure until a

steady stream of hydrogen is passing through the hydrogen-electrode jacket. Close the switch in the battery circuit and tap the key of the potentiometer. If a deflection of the galvanometer is noted, change the setting of the resistor slide until no deflection occurs when the key is lightly tapped. Only slight currents must be passed or the hydrogen electrode will become polarized. When the galvanometer indicates no current is flowing, read and record the voltage. From a burette filled with 0.1 *N* HCl, add 5 ml. and measure the voltage. Continue adding increments of hydrochloric acid until 35 ml. have been added, recording the voltage measured and the total milliliters of HCl each time an addition has been made. The size of the increments of acid should be reduced when the corresponding voltage change becomes markedly larger, as will be the case near the equivalence point. The amounts of HCl added should be increased to 5 ml. again as the voltage increments decrease. Note when the indicator begins to change color and when the change is complete, recording the milliliters of reagent added at each point.

When the titration is completed, shut off the stream of hydrogen, open the battery circuit, and empty and rinse the beaker. The electrodes and stirring device may be rinsed by immersing them in the beaker filled with distilled water.

The following titrations should then be made, using the same procedure as described above: titration of 0.1 *N* NH_4OH with 0.1 *N* HCl, methyl orange as indicator; titration of 0.1 *N* CH_3COOH with 0.1 *N* NaOH, phenolphthalein as indicator, and titration of 0.1 *N* Na_2CO_3 with 0.1 *N* HCl. In the last case two drops of phenolphthalein should be added to the sodium carbonate solution when the titration is begun. After the solution is decolorized, 2 drops of methyl orange should be added.

In each titration, record the milliliters of reagent added and the corresponding e.m.f. of the cell as indicated by the voltmeter when the potentiometer is balanced after each addition of reagent, and note when the color changes of the indicators begin and end.

B. Oxidation-Reduction Titration. Make up a cell consisting of a bright platinum wire electrode and a normal calomel electrode, both dipping into a 150-ml. beaker containing 25 ml. of approximately 0.1 *N* ferrous ammonium sulfate and 25 ml. of distilled water.

From a 50-ml. burette filled with 0.1 *N* ceric sulfate solution, add successive increments of ceric sulfate to the solution in the beaker, using the general procedure described under A above and measuring the e.m.f. of the cell after each addition. Record the results.

Calculations

A. Acid-Base Titration.

1. From the measured values of the e.m.f. calculate the *p*H at each value of added reagent.
2. For each titration plot *p*H as ordinate against milliliters of reagent added as abscissa.
3. On each curve mark the neutral point (*p*H = 7), the stoichiometric equivalence point, and the points at which the indicator changes began and ended.

B. Oxidation-Reduction Titration.

1. Plot the voltages obtained in B against the corresponding total volumes of reagent added.
2. From the graph, find the volume of 0.1 *N* ceric sulfate added to the ferrous ion solution at the equivalence point and calculate the concentration of the original solution with respect to ferrous ions.

EXPERIMENT 44

ELECTROMETRIC ANALYSIS: CONDUCTOMETRIC TITRATION

Object

To determine equivalence points in chemical reactions, using conductance measurements.

Discussion

In carrying out a chemical reaction, such as a titration or a precipitation reaction involving the addition of one reagent to a solution containing the substance being determined, a change in electrical conductance frequently takes place. Just before and after the equivalence point is reached, there is often a marked difference in the rate of change of conductance with increment of reagent added. This may happen, for instance, when an ion of the reagent unites with an ion of the solution to form a slightly soluble or slightly dissociated substance. It is then possible to find the amount of reagent equivalent to the solution titrated from measurements of the conductance during a titration in which an excess of the standard reagent is added.

In carrying out an analysis by this method, successive amounts of reagent are added to a diluted sample of the solution to be titrated and the conductance is found after each addition. When the values of conductance thus obtained are plotted against the amount of added reagent, two straight lines are generally obtained. The intersection shows the equivalence point. The slopes of the two lines are best determined from points obtained at the beginning and at the end of the titration, little weight being given to values near the equivalence point. The lines compare the rates of change of conductance with added reagent, before and after the reaction is complete, the point of completion being obtained by extrapolation to the intersection. This makes the method especially applicable to cases in which there is hydrolysis, slight solubility, or dissociation of the reaction product, as well as to cases in which solutions are colored or turbid.

The method is generally not useful if large amounts of foreign electrolytes are present, since the conductance changes due to the reaction become very small compared to the total conductance to be measured. Changes in the total volume of solution or of the temperature during titration will reduce the accuracy.

The method has been applied with success to the titration of strong acids, strong bases, mixtures of strong and weak acids or bases, and weak acids or bases and their salts, and to titrations involving precipitation and complex formation.

The conductance of the solution being titrated is followed by measurement of the resistance between two fixed electrodes in the solution after each addition of reagent. The electrode may be permanently attached to the titration vessel or a "dipping type" conductivity cell may be inserted in the solution. To keep changes in total volume small, the concentration of reagent should be from ten to twenty times that of the solution, and the volume of the solution should be large compared to the total amount of reagent to be added. Any convenient method may be used for measuring the resistance. Since it is not essential to find the absolute values of the specific conductance as long as some quantity proportional to it is determined, it is not necessary to calibrate the cell or to use high-frequency current in the measurement of the resistance. Alternating current, 60-cycle, 110 volts, may be used with an appropriate transformer to supply low voltage to a Wheatstone bridge, and an alternating current galvanometer may be used to determine the null point, as shown in Fig. 43. From the transformer *Tr*, current is supplied to the bridge by connection across a noninductive resistance *R*, in series with the field coil *FC* of the galvanometer *G*, in which an electromagnet instead of a permanent magnet is used. By this means the current in the moving coil is kept in phase with the flux in the field. The alternating current galvanometer acts similarly to the direct current

moving-coil galvanometer when used as a detector, inasmuch as the currents in the coil and in the field change direction at the same time.

Three arms of the Wheatstone bridge may be set up with a slide-wire and variable resistor or a standard student type unit may be used; this combines a ratio unit and decade resistors to give a direct-reading instrument.

Apparatus and Chemicals Required

Conductivity cell (a dipping type may be easily constructed).[1] Wheatstone bridge unit, a.c. galvanometer with transformer and series resistance, connecting wires, stirring device, thermostat (constant to 0.1°), 500-ml. graduated cylinder, 600-ml. beaker, two 25-ml. pipettes, 50-ml. burette, ring stand and clamps, standard solutions of 0.1 *N* barium chloride and of 0.1 *N* sodium oxalate, and approximately 0.1 *N* solutions of lead nitrate and of sodium sulfate.

Method of Procedure

Connect the parts of the Wheatstone bridge, as shown in Fig. 43 and check the wiring. Adjust the mechanical and magnetic zeros of the a.c. galvanometer. In order to determine lead ion in the solution of lead nitrate supplied, place 25 ml. of the solution in a 600-ml. beaker, add 475 ml. of

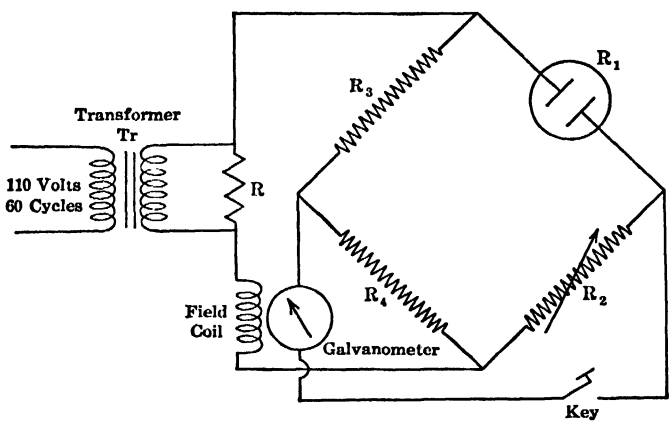

FIG. 43

distilled water, and stir thoroughly. After inserting the dipping conductivity cell in the solution, keeping the galvanometer key closed, measure the resistance by adjusting the ratio dial and the decade resistors until the galvanometer gives no deflection when the "battery" key is depressed. The "battery" key should be very lightly tapped to avoid large deflections which might damage the instrument. The resistance is the product of the reading on the ratio dial and the sum of the readings of the decade resistors when the bridge is balanced.

Fill the burette with 0.1 *N* sodium oxalate and add 5 ml. to the solution in the beaker. Stir the solution and measure the cell resistance. Continue adding the reagent in 5-ml. increments, measuring the resistance, and recording the resistance and total volume of reagent added after each addition until 50 ml. have been added.

Perform a similar titration to determine sulfate ion in the sodium sulfate solution provided, using 0.1 *N* barium chloride as the reagent.

Calculations

1. Compute the value of the conductance (the reciprocal of the resistance measured) for each value of the cell resistance. For each titration, plot the conductance against the corresponding total volume of reagent added and extend the curves until they intersect.

2. Find the equivalence point for each titration from the intersections of the curves.

3. Calculate the normality of the sodium sulfate solution with respect to sulfate ion and the grams of lead ion per liter of the lead nitrate solution for the original solution in each case.

[1] Daniels, Mathews, and Williams, "Experimental Physical Chemistry." McGraw-Hill, 1934.

EXPERIMENT 45

ELECTROMETRIC ANALYSIS: DROPPING MERCURY ELECTRODE

Object

To acquire practice in the use of the dropping mercury electrode for qualitative and quantitative analysis.

Discussion

Identification and quantitative determination of many electro-reducible substances in dilute solution may be made by means of a suitably conducted electrolysis of the solution in a cell in which the cathode is mercury falling in droplets from a glass capillary tube. Several types of automatically recording electrolysis apparatus are commercially available, and manually operated arrangements [1] may be constructed with which the required measurements of current and voltage can be made. The general method consists of the application of a gradually increasing e.m.f. across the electrodes of the cell containing the solution and the measurement of the potential of the dropping electrode and of the corresponding current through the cell as the e.m.f. is increased. During the electrolysis of an electro-reducible substance in solution only a slight "residual" current, increasing in approximately direct proportion to the applied e.m.f., passes through the cell until the decomposition potential of the reducible substance is reached. When the decomposition potential is reached and discharge of the substance at the surface of the mercury drop begins, the current first increases rapidly with increasing potential, then gradually approaches a limiting value independent of the increasing e.m.f.

The small residual current is caused mainly by the continuous formation of an electrical double layer of positive and negatively charged ions at the interface between the continuously increasing surface of the mercury and the solution. The orientation of the charges as the layer is formed results in a flow of current across the interface. The direction in which the "condenser" current flows depends on the sign of the charge on the mercury surface and changes direction at the voltage corresponding to the maximum in the electro-capillary curve of mercury. The reduction of traces of impurities in the solution may also add to the residual current.

When the decomposition potential of the electro-reducible substance is reached, ions of the substance are discharged at the surface of the mercury drop. A resultant decrease occurs in the average concentration of those ions at the drop surface as the rise in the applied e.m.f. increases the discharge rate. The ions discharged are replaced by diffusion from the main body of the solution at a rate proportional to the difference in concentration between the drop surface and the solution. The concentration of the surface layer decreases as the e.m.f. is further increased, the rate of diffusion becoming proportionately greater. When the potential reaches a value such that the reducible ions are effectively being reduced as fast as they reach the surface of the drop, the concentration gradient and the rate of diffusion reach maximum values. When this state is reached, that part of the current which depends on the rate of diffusion of the ions reaches a limit, independent of the e.m.f. and proportional to the concentration of the reducible substance.

In addition to the diffusive force resulting from the concentration gradient, an electrical force exists which results from the potential gradient around the mercury drops. This force also tends to supply ions to the drop surface. The part of the limiting current due to such electrical migration of the reducible ions may be practically eliminated by the addition to the solution of a large excess of a salt which is reduced only at a more negative potential than that of the one being deter-

[1] Kolthoff and Lingane, *Chem. Rev.*, **24**, 1939.

mined and which does not react with it. The current through the solution will be carried almost entirely by the ions of the added salt.

In the presence of an excess of such an indifferent salt the limiting current is directly proportional to the concentration of the reducible substance, all other conditions being constant. A quantitative estimation is thus possible. Qualitatively, the reducible ions are characterized by the "half-wave" potential, the potential at which the limiting current, corrected for the residual current, has reached half its maximum value. A typical current-voltage curve for a solution containing two electro-reducible substances, *a* and *b*, with an excess of indifferent salt, is shown in Fig. 44. The half-wave potentials *E* and limiting currents *i* are indicated for each substance.

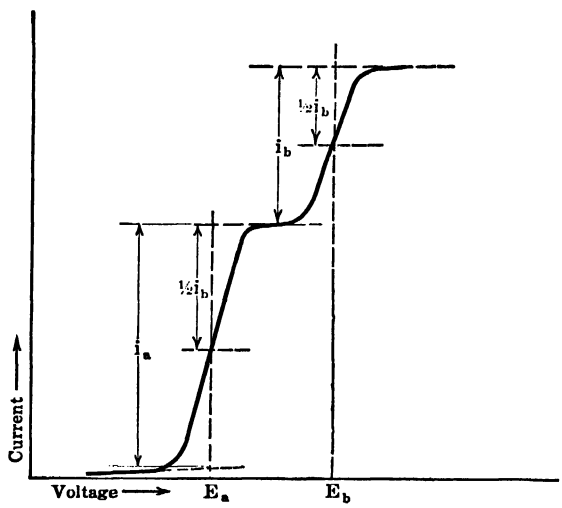

FIG. 44

When several reducible substances are present, each will make its own contribution to the total limiting current when its own decomposition potential is reached and exceeded, the concentration of each ion being proportional to the height of the corresponding current wave produced. The potential of the dropping mercury electrode is preferably measured with respect to an external reference electrode. However, if the still pool of mercury used as anode in the cell has an area greater than 1 sq. cm., it will generally maintain a constant potential. This may be measured and subtracted from the e.m.f. applied to the cell to give the dropping electrode potential.

Maxima tend to appear in the current voltage curves just before the limiting current reaches its steady value. In order to eliminate these, traces of appropriate capillary active substances are added to the solution. The sodium salt of methyl red or gelatin are of general use, but choice of the substance used for suppression of maxima must be made according to the acidity of the solution and the particular substance studied.

The half-wave potentials for many substances have been determined. Theoretical calculations of the value of the diffusion current for various substances have been made, showing good agreement with experimental values observed. However, for analytical work it is best to prepare a calibration curve from the electrolysis of a solution of known concentrations of the substances to be determined. From the calibration curve, the relation between the limiting current and the concentration for each reducible substance may be found. Analyses of "unknown" solutions may then be made, with the concentration of the indifferent salt and all other experimental conditions being kept the same.

The dropping electrode method is applicable to solutions of small concentrations, 10^{-2} to 10^{-5} molar. It has the advantages that the analyses may be made on very small samples and that the sample is not destroyed by the analysis. Though most use of the method has been made in the

analysis of electro-reducible substances, successful studies have been made of electro-oxidizible materials with the dropping electrode as the anode.

The experimental arrangement shown in Fig. 45 may be used for obtaining voltage-current curves. Voltage is applied to the electrolysis cell from a variable source, the dropping electrode being made the cathode and the still pool of mercury the anode. The simple cell shown has a side capillary in which a platinum wire may be placed to make contact with the mercury pool. The dropping tube, a calomel electrode, and outlets for passing gas into and over the solution are inserted through the stopper. A mercury well is attached above the capillary tube to supply mercury. The pressure on the dropping mercury may be set by the height of the reservoir or, by applying suction or

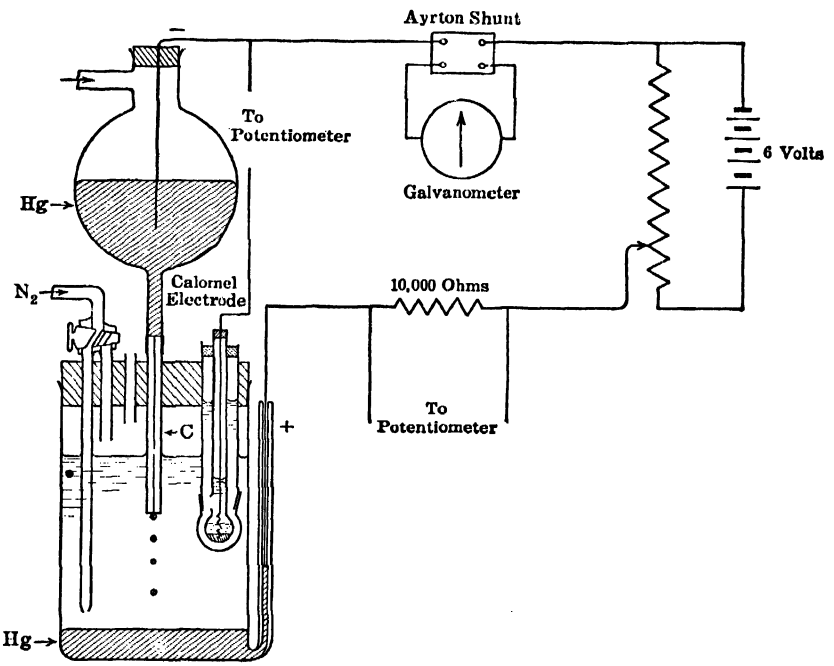

FIG. 45

pressure from a leveling bulb to the surface of the mercury, it may be set to any desired value. Oxygen, which is easily reduced and which gives erratic results if present, is removed from the solution by flushing with nitrogen before the electrolysis. During the electrolysis nitrogen is passed over the surface of the solution.

A galvanometer with a variable shunt for regulating the sensitivity is connected in series to permit measurement of the current through the cell circuit. From the potential drop across a 10,000-ohm resistor in series, as measured with a potentiometer, the current may be separately calculated. A calibration of the galvanometer may thus be made. Currents of the order of 10^{-5} ampere are obtained. Since the current oscillates at each value of the applied e.m.f. as the mercury drops form and fall, some means of measuring the average current is required. For this reason a galvanometer of long period, about 15 seconds, is used and the drop time is made to be from 3 to 6 sec. Tubes of a diameter of about 0.03 mm. are used. The desired drop time is obtained by choice of capillary size, length of tube, and pressure from the reservoir of mercury. Capillary tubes may be drawn out from tubing of larger diameter or selected from thermometer tubing. A potentiometer is connected to the cell as shown for measurement of the potential of the dropping electrode against the calomel electrode dipping into the solution. A multiple-pole selector switch may be used to connect a single potentiometer to a standard cell, to the calibrating resistor terminals, or to the calomel cell and dropping mercury electrode as desired.

Apparatus and Chemicals Required

Galvanometer, Ayrton shunt, potentiometer and accessories, 10,000-ohm resistor, 1000- and 100-ohm resistors with potentiometer taps, multiple-pole switch, calomel electrode, 0.03-mm. capillary tubing, mercury reservoir, connecting wire, four $1\frac{1}{2}$-volt dry cells or 6-volt storage battery, electrolysis cell, 50-ml. graduate, 1-ml. Mohr pipette.

Purified mercury, 0.1 *M* KCl solution, dilute solution of $ZnCl_2$, $CdCl_2$, and $CuCl_2$, each 0.1 *M* with respect to KCl, standardizing solution 0.001 *M* in $ZnCl_2$, $CdCl_2$, and $CuCl_2$, and 0.1 *M* in KCl, 3 per cent solution of sodium methyl red.

Method of Procedure

Place sufficient mercury in the electrolysis cell to cover the base with a pool about 3 mm. in depth and add 50 ml. of the standardizing solution, 0.001 *M* in $ZnCl_2$, $CdCl_2$, and $CuCl_2$, and 0.1 *M* in KCl, and 0.5 ml. of 0.1 per cent sodium methyl red. Clamp the cell in place and insert the stopper carrying the gas inlets and outlet and the calomel cell. Lower the mercury reservoir and the attached capillary tube until the tube passes through the opening provided in the stopper and is immersed to one-third the depth of the solution. Flush out the dissolved oxygen by bubbling nitrogen through it for fifteen minutes. For the remainder of the measurements, direct a slow stream of nitrogen over the surface of the liquid by passing nitrogen through the short inlet tube.

Open the clamp above the capillary tube and allow mercury to drop through the solution, making the rate from 3 to 6 seconds per drop by raising or lowering the mercury reservoir or adjusting the pressure on the reservoir with an attached leveling bulb. The dropping tube may be cleaned with nitric acid and rinsed with water if necessary.

Adjust the potentiometer current to its proper value by checking against the standard cell. Connect the still pool of mercury and the mercury in the reservoir to the taps on the 1000- and 100-ohm resistors so that the dropping electrode will be the cathode. Close the circuit supplying the current for electrolysis and, by adjusting the potentiometer taps of the resistors, apply a low voltage, about 0.1 of a volt, to the electrolysis cell. Read the zero setting of the galvanometer with the Ayrton shunt set to short out the current. Switch the galvanometer into the cell circuit by means of the shunt, using a ratio which permits accurate reading of the deflection. The shunt setting should be changed as required by increases in the current as the experiment proceeds. With the potentiometer, measure the e.m.f. of the dropping electrode against the calomel cell as a reference. Record the value of the e.m.f. measured and the value of the maximum deflection of the galvanometer.

Increase the applied voltage by increments of about 0.1 volt, measuring and recording the e.m.f. and the current as shown by the galvanometer deflection, until the voltage has been increased to about 1.5 volts.

Reduce the applied voltage to zero and remove and clean the electrolysis cell, placing its contents in the residue jar provided. Pour a fresh supply of mercury in the cell, add 30 ml. of one of the dilute solutions of $ZnCl_2$, $CuCl_2$, and $CdCl_2$, 0.1 *M* with respect to KCl, and 0.5 ml. of 0.1 per cent sodium methyl red. Perform an electrolysis of this solution, following the same procedure as in the previous case.

When the electrolysis is completed, shut off the dropping mercury. Empty and wash the cell, fill with distilled water, and replace it so that the tip of the capillary tube is immersed in the water.

Calculations

1. Convert the galvanometer deflections to microamperes by means of the calibration curve provided. Plot the corresponding values of current and e.m.f., taking the calomel electrode potential as zero. From the curve obtained for the standard solution, find the half-wave potential and the limiting current for Zn^{++}, Cu^{++}, and Cd^{++} ions at the concentrations used. Calculate the millimols per liter of each ion per microampere of the corresponding limiting current.

2. Assuming the limiting currents to be proportional to concentration, determine from the voltage-current curve for the "unknown" solution which of the ions Zn^{++}, Cu^{++}, and Cd^{++} were present and what their concentrations were.

EXPERIMENT 46

ELECTROLYTIC EQUILIBRIA, QUINHYDRONE AND GLASS ELECTRODES

Object

To measure *p*H in aqueous solutions, using the quinhydrone and the glass electrodes.

Discussion

Autoprotolysis may occur in water with the formation of an acid, the hydronium ion H_3O^+, and a base, the hydroxyl ion OH^-. The reaction which takes place is

$$2H_2O \rightleftarrows H_3O^+ + OH^- \qquad [1]$$

The reaction proceeds only slightly to the right toward the formation of hydronium and hydroxyl ions, about 10^{-7} mol of H_3O^+ being present in a liter of water at 25°. For this reason the concentration of the water when pure and when in dilute solutions may be regarded as constant for the purpose of equilibrium calculations. For the reaction 1, at equilibrium

$$[H_3O^+][OH^-] = K[H_2O]^2 = K_w \qquad [2]$$

when K_w is the autoprotolysis constant of water and the expressions in brackets represent the molar concentrations of the indicated substances.

When a strong electrolyte such as hydrogen chloride is dissolved in water, practically complete protolysis occurs, the water acting as a base:

$$\underset{\text{acid}_1}{HCl} + \underset{\text{base}_2}{H_2O} \rightarrow \underset{\text{acid}_2}{H_3O^+} + \underset{\text{base}_1}{Cl^-} \qquad [3]$$

Because of the leveling effect of water on strong electrolytes the acidity or *p*H may be calculated, assuming that the hydronium ion concentration is equal to the mols per unit volume of added electrolyte.

When a weak electrolyte such as acetic acid is dissolved in water, the protolysis reaction occurring is far from complete, since the anion base $C_2H_3O_2^-$ has a high tendency to remove protons from the hydronium ion:

$$\underset{\text{acid}_1}{HC_2H_3O_2} + \underset{\text{base}_2}{H_2O} \rightleftarrows \underset{\text{acid}_2}{H_3O^+} + \underset{\text{base}_1}{C_2H_3O_2^-} \qquad [4]$$

The protolysis constant of the acid, K_a, may be calculated from the following expression, assuming the concentration of the water to be effectively unchanged by the reaction:

$$K_a = \frac{[H_3O^+][C_2H_3O^-]}{[HC_2H_3O_2]} \qquad [5]$$

The general formula is

$$K_a = [H_3O^+]\frac{[\text{base}_1]}{[\text{acid}_1]}$$

where $[\text{base}_1]$ refers to the conjugate base_1 of the weak acid_1.

In the presence of the increased amount of hydronium ion resulting from the protolysis of the acetic acid molecules, the autoprotolysis of the water is repressed. The concentration of the hydronium ion from the water, already small, may be neglected when compared to the concentration of hydronium ion from the acid. The latter may be taken as equal to the concentration of the anion

base, $C_2H_3O_2^-$. If C_a is the concentration of the acetic acid before dissociation and $(C_a - [H_3O^+])$ is the concentration of the acid at equilibrium, then from equation 5:

$$[H_3O^+] = -\tfrac{1}{2}K_a + \sqrt{C_aK_a + \tfrac{1}{4}K_a^2} \qquad [6]$$

A similar equation may be derived for the hydroxyl ion concentration in a solution of a weak base in water, in which case the hydronium ion concentration may be calculated from that of the hydroxyl ion by means of equation 2.

When a strong electrolyte such as the salt, sodium acetate, is added to a solution of acetic acid, the addition of the common anion base $C_2H_3O_2^-$ shifts the equilibrium point of equation 4 toward the side of the undissociated acetic acid. At equilibrium, assuming the added salt to be completely dissociated, and taking the concentration of the anion base $C_2H_3O_2^-$ as equal to the concentration of the hydronium ion, the total concentration $[C_2H_3O_2^-]$ is $(C_s + [H_3O^+])$, where C_s is the concentration of salt added. Equation 5 may then be written

$$[H_3O^+] = \frac{K_a(C_a - [H_3O^+])}{(C_s + [H_3O^+])} \qquad [7]$$

When the concentration of the hydronium ion is small compared to the concentrations of the salt and the acid, equation 7 becomes simply:

$$[H_3O^+] = K_a\frac{C_a}{C_s} \qquad [8]$$

or

$$pH = pK_a + 2.303 \log\frac{C_s}{C_a} \qquad [9]$$

Such solutions of acids and their salts, in which the pH depends upon the concentration of an acid and its conjugate base, both concentrations being high, are called buffer solutions. As may be seen from the general equation in which

$$[H_3O^+] = K_a\frac{[\text{Acid}]}{[\text{Base}]}$$

if the concentrations of the acid and its anion base are both large, small additions of added acid or base can have only small effect on the acidity (pH).

On account of their ability to maintain the same acidity in spite of slight contamination, as from atmospheric CO_2 or from solution of alkali from glass containers, the mixtures of weak acids and salts are valuable as standards in the determination of pH. Mixtures exhibiting similar buffer action may be prepared from weak bases and their salts. In this case:

$$[H_3O^+] = \frac{K_w}{K_b}\frac{C_s}{C_b} \qquad [10]$$

where C_b is the concentration of the base,
K_b is the protolysis constant of the base,
C_s is the concentration of the conjugate acid, equal to the concentration of added salt.

The concentrations C_b and C_s are the concentrations of the base and its conjugate acid, as NH_3 and NH_4^+.

If a salt such as sodium acetate dissolves in water the sodium ion would be expected to have no reaction with water, since sodium hydroxide, the compound that might be formed, is highly or completely dissociated. The acetate ion, however, is the conjugate base of a weak acid, acetic acid, and a hydrolysis or solvolysis reaction, the reverse of reaction 3, will occur:

$$\underset{\text{base}_1}{C_2H_3O_2^-} + \underset{\text{acid}_2}{H_3O^+} \rightleftarrows \underset{\text{acid}_1}{HC_2H_3O_2} + \underset{\text{base}_2}{H_2O} \qquad [11]$$

the hydronium ions coming from the autoprotolysis of water. The concentration of hydronium ions at equilibrium, from equations 2 and 4, is given by

$$[H_3O^+] = \frac{K_w}{[OH^-]} = K_a \frac{[HC_2H_3O_2]}{[C_2H_3O_2^-]}$$

or

$$\frac{K_w}{K_a} = \frac{[OH^-][HC_2H_3O_2]}{[C_2H_3O^-]} \qquad [12]$$

The ratio $\frac{K_w}{K_a}$ is commonly called the hydrolysis constant K_h of the salt.

As may be seen from equation 11 the concentration of the acid formed is equal to the concentration of the hydroxyl ion, neglecting the autoprotolysis of water. If the amount of acetic acid formed is small compared to the amount of acetate ion added, the concentration of the acetate ion may be taken as equal to that of the added salt C_s. From equations 2 and 12, the concentration of hydronium ion may be calculated, as shown below:

$$[H_3O^+] = \sqrt{\frac{K_w K_a}{C_s}} \qquad [13]$$

and the acidity is given by

$$pH = \tfrac{1}{2}pK_w + \tfrac{1}{2}pK_a + \tfrac{1}{2}\log(C_s) \qquad [14]$$

Hydrolysis also occurs in solutions of salts which are derived from strong acids and weak bases, or of salts of weak bases and weak acids, for which solutions similar calculations may be made.

Quinhydrone Electrode

Since the hydrogen electrode (Experiment 41) is easily poisoned and difficult to prepare and maintain, several other electrodes have been devised which have an electromotive force dependent on the hydrogen ion concentration. An excellent one is the quinhydrone electrode. It consists of an inert electrode of gold or platinum dipping in the solution, saturated with quinhydrone, in which the hydronium ion concentration and pH are to be measured. Quinhydrone, $C_6H_4O_2 \cdot C_6H_4(OH)_2$, furnishes equal concentrations of quinone, $C_6H_4O_2$, and hydroquinone, $C_6H_4(OH)_2$, when placed in solution. In the presence of hydronium ions a series of reactions take place, the net result being expressed in the equation:

$$C_6H_4O_2 + 2H_3O^+ + 2e \rightleftarrows C_6H_4(OH)_2 + 2H_2O \qquad [15]$$

The electromotive force E_q of the electrode, corresponding to the equation above, is

$$E_q = E_q^0 - \frac{RT}{2F}\log_e \frac{a_{C_6H_4(OH)_2}}{(a_{C_6H_4O_2})(a_{H_3O^+})^2} \qquad [16]^{1}$$

Since the concentrations of quinone and hydroquinone are equal, the electromotive force is a function of the effective concentration of the hydronium ions. At 25°, E_q^0 is 0.6990 volts, referred to the hydrogen electrode as zero, and

$$E_q = 0.6990 + 0.0591 \log a_{H_3O^+} = 0.6990 - 0.0591\, pH \qquad [17]$$

The electrode is usually combined with a calomel electrode as reference. In that case the measured potential difference is less than that which would be obtained if the standard hydrogen electrode were used, since the calomel cell is also positive with respect to the hydrogen electrode. When a quinhydrone electrode is combined with a calomel electrode, the electromotive force of the combination E is related to the pH of the solution used as follows, at 25°:

$$pH = \frac{0.6990 - E_c - E}{0.0591} \qquad [18]$$

E_c is the potential, referred to the hydrogen electrode, of the calomel electrode used.

[1] H_3O^+ is equivalent to H^+ in the older nomenclature of Arrhenius-Ostwald, and thus a_{H^+} becomes $a_{H_3O^+}$.

The requirement that equal concentrations of quinone and hydroquinone are produced by the solution of quinhydrone is met generally in solutions having a pH not greater than 8. In addition to this precaution, care must be exercised that the electrode is not used in the presence of substances which would react so as to change the equality of the quinone and hydroquinone activities.

Glass Electrode

The glass electrode has the advantages that it may be used in solutions containing oxidizing or reducing materials and that it requires no addition of hydrogen gas or of quinhydrone to be made. It consists essentially of a thin glass membrane M separating a reference solution and electrode from the solution whose pH is to be measured. In the form shown in Fig. 46 a quinhydrone reference electrode is inserted in a tube containing 0.01 N HCl solution. The lower end of the tube is closed with

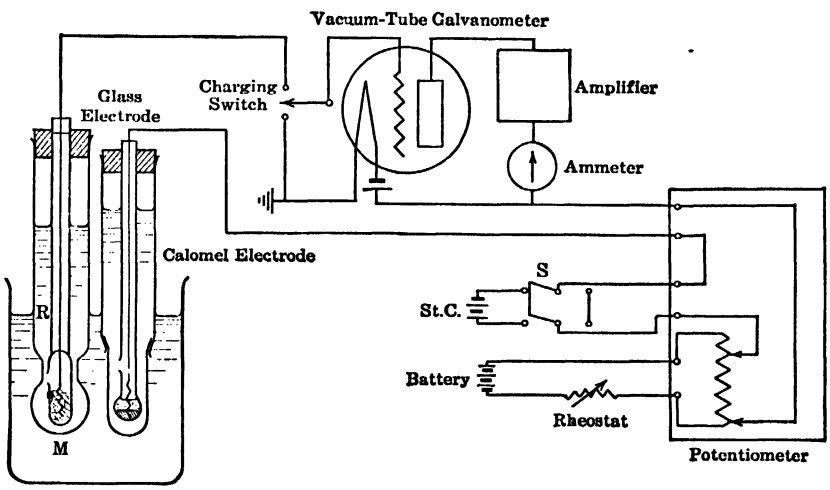

FIG. 46

a thin membrane of glass M especially selected for low electrical resistance and for ability to serve as a hydrogen electrode over a wide range of pH. The glass electrode gives good results from a pH of 0 to a pH of 9. In more alkaline solutions the electrode gives a potential which is reproducible but no longer a function of the hydrogen ion concentration alone. The electrode may be standardized by measuring the electromotive force of the cell in which the electrode is combined with a calomel reference cell and placed in a solution whose pH is known. The equation for the pH at 25° is:

$$pH = \frac{E_g^0 - E}{.0591} \qquad [19]$$

E is the measured potential of the cell and E_g^0 is a constant for the particular electrode used. When the glass electrode is the negative electrode, as shown by the potentiometer, E should be given a negative sign.

When the electromotive force of a cell including a glass electrode is measured with a potentiometer, the galvanometer used must be a sensitive electrometer or a vacuum-tube galvanometer because of the high resistance of the glass membrane. In Fig. 46 is shown a circuit in which a vacuum-tube galvanometer is used with a potentiometer to measure electromotive force of a cell including a glass electrode. For convenience in electrical shielding when measurements are being made with the glass electrode, the potential leads of the potentiometer are shorted by means of the double-pole double-throw switch S and the glass electrode-calomel electrode cell is connected in series with the galvanometer by means of shielded leads. When the potentiometer is being standardized,

the standard cell is connected to the potential leads by means of the double-pole double-throw switch, and the leads to the calomel and glass electrodes are removed and shorted. The potentiometer may then be standardized as described in Experiment 41.

Apparatus and Chemicals Required

Quinhydrone or glass electrode, calomel electrode, student potentiometer and accessories, including simple moving coil or vacuum-tube galvanometer and shielded leads, 25° thermostat, 10-ml. and 50-ml. pipettes, 100-ml. volumetric flask, 150-ml. beaker, 250-ml. Erlenmeyer flask, glass stirring rod.

Quinhydrone, solutions of 0.1 *M* $HC_2H_3O_2$, of 0.1 *M* $HC_2H_3O_2$ and 0.1 *M* $NaC_2H_3O_2$, of 0.001 *M* $NaC_2H_3O_2$, chromic acid cleaning solution, buffer solution of known *p*H less than 8.

Method of Procedure

The quinhydrone electrode should be cleaned in chromic acid cleaning solution and washed repeatedly with distilled water. With a pipette, place 50 ml. of 0.1 *N* $HC_2H_3O_2$ in a 150-ml. beaker, which should then be placed in a thermostat bath kept at 25°. Add a few crystals of quinhydrone to the solution and stir. Dip the quinhydrone and calomel electrodes in the solution and measure the electromotive force of the cell thus formed, using the procedure described in Experiment 41. Record the potential measured and note the polarity of the electrodes. The solution in the beaker should be discarded after use, and the beaker and electrodes rinsed several times with distilled water.

Prepare a 0.01 *M* solution of acetic acid by diluting 10 ml. of 0.1 *M* $HC_2H_3O_2$, measured with a pipette, to 100 ml. in the volumetric flask. The dilution should be made with freshly boiled distilled water, cooled to 25°. Proceeding as above, measure the electromotive force of the quinhydrone calomel cell using the 0.01 *M* $HC_2H_3O_2$ prepared. Record the potential measured.

In the same way, 0.001 *M* $HC_2H_3O_2$ should be made by dilution of the 0.01 *M* $CH_2H_3O_2$ solution, and the potential of the quinhydrone and calomel cell when made up with the 0.001 *M* solution should be determined and recorded.

In a similar fashion, measure and record the potential difference between the quinhydrone and calomel electrodes in a solution 0.1 *M* with respect to both $HC_2H_3O_2$ and $NaC_2H_3O_2$ and in the solution diluted to 0.01 *M* and to 0.001 *M*. In each case, the solution should be saturated with quinhydrone. The electrodes and cells must be carefully rinsed each time before being used with a new solution.

Place 50 ml. of a buffer solution of known *p*H in the 150-ml. beaker and set in the thermostat. Lower a hydrogen electrode into the solution until the bulb of thin glass is completely covered and insert the tip of the calomel electrode in the solution, as shown in Fig. 46. To prepare the hydrogen electrode for use, the inner chamber is filled about one-quarter full of quinhydrone and 0.1 *N* HCl solution is added. When the small chamber is filled, it is immersed in the glass electrode tube, which has been filled with 0.1 *N* HCl. The glass bulb of the electrode should then be placed in distilled water and the electrode should be allowed to soak for several hours before use. Keep the glass membrane wet when not in use and remove the inner chamber and store it in a test tube containing 0.1 *N* HCl solution.

A potentiometer should be connected in the circuit shown in Fig. 46, in which a vacuum-tube galvanometer is used and shielded leads are provided for connecting the potentiometer, galvanometer, and cell in series. The internal circuit switch of the galvanometer should be closed and the tubes allowed to heat several minutes before measurements are to be made. Adjust the galvanometer current until the indicating needle is near the center of the scale. Short the leads to the cell and close the double-pole double-throw switch to include the standard cell. Adjust the potential drop over the potentiometer from the working cells in the usual fashion until the galvanometer needle gives no deflection, the potentiometer being set at the value of the electromotive force of the standard cell.

After the potentiometer is standardized, the shielded leads should be connected to the glass and calomel electrodes in the solution and the double-pole double-throw switch should be used to short

the potential posts of the potentiometer. When this has been done, measure the potential of the cell, following the same procedure as if the vacuum-tube galvanometer were an ordinary galvanometer. If no setting of the potentiometer will permit a balance to be made, the polarity of the leads to the cell must be reversed. Record the potential measured and the polarity of the glass electrode, as indicated by the potentiometer. After completion of the measurement, rinse the electrodes with distilled water and leave the glass electrode bulb immersed in distilled water. The battery circuit of the potentiometer should be opened and the current in the galvanometer turned off.

Calculations

1. Using the appropriate equations, calculate the *p*H of the solution corresponding to the electromotive force found for each cell used.

2. Calculate the effective hydronium ion concentration from the *p*H value for each solution.

3. Given that $K_a = 1.82 \times 10^{-5}$ and $K_w = 0.82 \times 10^{-14}$ at 25°, calculate the values of the hydronium ion concentrations that would be present in the solutions used, assuming the law of mass action to be followed.

4. Using the values obtained in 2, plot curves showing the variation of hydronium ion concentration with the stoichiometric concentration of acetic acid for the series of acid solutions and for the series of acid solutions containing dissolved sodium acetate. On the same sheet, plot similar curves, using the values of hydronium ion calculated in 3.

EXPERIMENT 47

INDICATORS, BUFFER SOLUTIONS, COLORIMETRIC DETERMINATION OF *p*H

Object

To determine the dissociation constant for an indicator, to prepare buffer solutions of known *p*H value, to measure *p*H colorimetrically, and to determine the degree of hydrolysis of various salts.

Discussion

INDICATOR CONSTANT. Weak acids and bases which exhibit one color when dissociated and another when undissociated are called indicators. If the indicator is an acid having the general formula HIn, it may dissociate in solution as follows:

$$\mathrm{HIn} \rightleftarrows \mathrm{H}^+ + \mathrm{In}^- \qquad [1]$$

In an alkaline solution the acid dissociates into the In^- ion because of the shift of the equilibrium point to the right when the concentration of H^+ is reduced, hence the In^- is called the "alkaline form." In acid solutions, the point of equilibrium is shifted to the left and the acid is in the form of HIn, the "acid form." According to the law of mass action:

$$\frac{[\mathrm{H}^+]\,[\mathrm{In}^-]}{[\mathrm{HIn}]} = K_{\mathrm{In}} = \frac{[\mathrm{H}^+]x}{(1-x)} \qquad [2]$$

where K_{In} is the indicator constant,
x is the fraction of the indicator in the alkaline form,
$(1 - x)$ the fraction in acid form.

Phenolphthalein is an indicator having an alkaline form which is red and an acid form which is colorless. For this indicator, the constant may be determined experimentally by the following method: A series of color standards is prepared, each containing a known quantity of indicator. The indicator in each standard is totally transferred to the red modification by an excess of alkali. A buffer solution, containing a known amount of indicator, is prepared to give some definite *p*H value at which the indicator is only partially transferred to the colored form. The fraction x of phenolphthalein which has been transformed to the pink or alkaline form is estimated and, on substitution in equation 1, the indicator constant may be calculated.

DETERMINATION OF *p*H BY THE USE OF INDICATORS. Indicators do not change color abruptly at given values of *p*H but undergo gradual changes in color and depth of color between definite limits of hydrogen ion concentration, as the ratio $x/(1 - x)$ changes. These limits vary with the different indicators. *p*H values lying between the useful limits for a given indicator are said to lie within the range for that indicator. Thus, phenolphthalein, which undergoes definite changes in shade between *p*H values of 8.3 and 10.0, is said to have a range of 8.3–10.0. It is evident that if one were to construct a color scale, by placing phenolphthalein in solutions of graded *p*H values lying between 8.3 and 10.0, he would be able to determine the *p*H of an unknown solution (if it is within the phenolphthalein range) by adding the same amount of indicator to it and matching the color so obtained against the standard phenolphthalein color scale. The limit of accuracy for this method is about 0.2 *p*H.

The number of indicators available is very large and their individual ranges run from as low as 0.1 to as high as 13.0. By careful selection, one may eliminate the majority of them and still be

able to cover the useful range for hydrogen ion work. Such a series (Clark, Lubs, Cohen), modified by the authors, is:

Indicator	Range	Color	$-\log K_1$	Composition of Solution, per cent
1. Thymol blue	1.2– 2.8	red-yellow	1.7	0.04
2. Brom phenol blue	3.0– 4.6	yellow-blue	4.05	0.04
3. Chlor phenol red	4.8– 6.4	yellow-red	5.98	0.04
4. Brom thymol blue	6.0– 7.6	yellow-blue	7·10	0·04
5. Phenol red	6.8– 8.4	yellow-red	7.9	0.02
or Cresol red	7.2– 8.8	yellow-red	8·3	0·02
6. Phenolphthalein	8.3–10.0	colorless-red	9·7	0·02
7. Alizarine yellow R	10.1–11.1	yellow-violet		0·01

Indicator stock solutions are usually made up by dissolving 0.1 g. of indicator in 50 ml. of 95 per cent alcohol. To make 0.04 per cent indicator solution, mix 10 ml. of the above stock solution with 40 ml. of water; to make 0.02 per cent indicator solution mix 5 ml. of stock solution with 45 ml. of water; and for 0.01 per cent take 2.5 ml. stock solution and 47.5 ml. water.

Buffer Solutions

Buffer solutions having graded values of *p*H may be made from mixtures of weak acids and bases and their salts, as described in Experiment 46. Table 20, in the Appendix, shows a set of buffers described by Clark and Lubs. The buffers may be prepared and stored in well-stoppered bottles for short periods of time or prepared from the standardized stock solutions as required. The solutions with *p*H between 2.0 and 6.0, containing $KHC_8H_4O_4$, should be stored at temperatures above 15° in order to prevent the separation of phthalic acid crystals. Biphthalate solutions are not satisfactory for use with methyl orange.[1]

Colorimetric Determination of Degree of Hydrolysis and Hydrolysis Constant. When a salt of a weak acid and strong base is dissolved in water, hydrolysis occurs. (Experiments 38 and 46.) Representing the acid by HA and the ion of the acid from the salt as A^-, the reaction that takes place when the salt is dissolved may be written:

$$A^- + H_2O \rightleftarrows HA + OH^-$$

If the salt is assumed to be completely ionized and x is the degree of hydrolysis and C_s the original concentration of the salt, then xC_s is the concentration of the acid formed from the salt and of the OH^- ion at equilibrium. From equation 12, Experiment 46,

$$K_h = \frac{K_w}{K_a} = \frac{x^2C_s}{(1 - x)} \qquad [3]$$

If the *p*H of a salt solution is found by the use of indicators, as described above, the value of the H^+ ion concentration may be calculated, and from this the OH^- ion concentration, if K_w is known.

The degree of hydrolysis is then

$$x = \frac{[OH^-]}{C_s} \qquad [4]$$

If x is known, K_a and K_h may be calculated from equation 3.

If the salt is formed from a strong acid and a weak base, BOH, the reaction with water is:

$$B^+ + H_2O \rightleftarrows BOH + H^+ \qquad [5]$$

[1] Kolthoff, *Rec. trav. chim.*, **45**, 433 (1926).

If x is the degree of hydrolysis and C_s the original concentration of the salt added, measurement of the pH and calculation of the H^+ ion concentration enables one to calculate x directly, since in this case xC_s is the concentration of the acid formed and of the hydrogen ion as well, or

$$x = \frac{[H^+]}{C_s} \qquad [6]$$

Apparatus and Chemicals Required

Variable depth colorimeter (or six Nessler tubes or even six uniform 6- by 1-in. test tubes), eight 100-ml. volumetric flasks, two burettes, one 5-ml. Mohr pipette, one 10-ml., one 25-ml., and one 50-ml. pipette, twelve test tubes, test-tube rack.

Aqueous phenolphthalein solution saturated at 25°, solutions of seven indicators listed on page 213, 0.1 N NH_4Cl, 0.1 N NH_4OH, 10 per cent NaOH, 0.1 N NaOH, aniline hydrochloride, ammonium chloride, sodium carbonate, potassium cyanide, sodium acetate.

Buffers: It is recommended that the stock solutions listed in Table 20 be available so that students can make their own specific buffer solutions.

Method of Procedure

A. Indicator Constant. Prepare a fresh series of color standards, labeled 1 to 5, by placing exactly 1, 2, 3, 4, and 5 ml. of saturated phenolphthalein solution in 100-ml. volumetric flasks, adding to each about 75 ml. of distilled water + 0.5 ml. of 10 per cent NaOH and filling the flasks to the mark with water.

Note: If a variable depth colorimeter is available, it will only be necessary to prepare standard No. 5.

Prepare a buffer solution, containing 50 ml. of 0.1 N NH_4Cl, 10 ml. of 0.1 N NH_4OH, and 40 ml. of phenolphthalein solution. Compare its depth of color with the standards, using a colorimeter, Nessler tubes, or even uniform test tubes. If a colorimeter is not available, estimate shades lying between two adjacent tubes as accurately as possible, being careful to make all observations through the same depth of liquid.

Record the data.

B. Measurement of Unknown pH; Determination of Degree of Hydrolysis and Hydrolysis Constant. Before one can accurately determine the pH of an unknown solution by means of indicators, it is necessary to ascertain which indicator includes the unknown pH within its range. To do this, place about 5 ml. of the solution in a small test tube, add three drops of indicator No. 4, and note whether the indicator assumes its "acid" or its "alkaline" color, proceed to test in turn, Nos. 5, 6, and 7, until the proper one is found. If acid, go down the indicator scale.

When you have determined which indicator is the correct one to use, secure the buffer solutions corresponding to its range or prepare the buffers required from stock solutions according to the directions in Table 20.

Prepare a solution of sodium acetate or other salt provided, not more than 0.1 M. Find the indicator which includes in its range the pH of the solution prepared. Place in test tubes 10 ml. of each buffer solution required to cover the range of the indicator and add 0.5 ml. of indicator solution to each tube. Determine the pH value of the solution by matching the color so obtained against the buffer indicator colors. Record the pH found and the concentration of the salt added in the prepared solution.

Calculations

1. Calculate the hydrogen ion concentration for the NH_4OH–NH_4Cl buffer solution used in A, assuming that the NH_4Cl is completely ionized and that the presence of phenolphthalein does not affect the pH (equation 10), Experiment 46. From the amount of phenolphthalein added to the buffer solution and the amount in the alkaline form as indicated by the color standard matched,

calculate the fraction x in the ionized form. Using the value of x obtained, calculate K_{In}, the indicator constant for phenolphthalein.

2. Calculate the hydrogen ion concentration in the salt solution whose pH was measured in B. Knowing the concentration of the salt added and the hydrogen ion concentration, calculate the degree of hydrolysis in the solution, the hydrolysis constant K_h, and the dissociation K_b of the weak base corresponding to the salt used.