HYDRAULICS

FOR

ENGINEERS AND ENGINEERING STUDENTS

HYDRAULICS

FOR

ENGINEERS AND ENGINEERING STUDENTS

BY

F. C. LEA,

D.Sc. (Engineering, London)

WHITWORTH SCHOLAR, ASSOC. R. COL. SC.; M. INST. C. E.; M. I. MECH. E.;
TELFORD PRIZEMAN; CRAMPTON PRIZE,
PROFESSOR OF MECHANICAL ENGINEERING IN THE UNIVERSITY OF SHEFFIELD

FOURTH EDITION

SECOND IMPRESSION

LONDON
EDWARD ARNOLD & CO.
1924

MADE AND PRINTED IN GREAT BRITAIN
AT THE UNIVERSITY PRESS, CAMBRIDGE, ENG.

PREFACE TO THE FOURTH EDITION

SINCE the publication of the first edition of this book there has been published a number of interesting and valuable papers describing researches of an important character which add materially to our knowledge of experimental hydraulics. Some of these have been incorporated in the text, while others have been dealt with in the Appendix.

In the first edition the author gave a good deal of attention to the logarithmic plotting of the experimental data dealing with the flow of water in pipes and channels. The examination of that data showed conclusively that in all cases the loss of head in a pipe was proportional to v^n, but n was not constant, and the author pointed out that it was almost as difficult to assess values to n as to choose suitable coefficients from tables. The work referred to in the Appendix, page 565, confirms for clean pipes the results demanded by the Principle of Dynamical Similarity, and it is very much to be hoped that all workers in the future will, as far as possible, record not only the flow along pipes and channels and the hydraulic slopes but also the density and viscosity of the fluid, so that in the analysis of the experiments $R/\rho v^2$ and vd/ν may be logarithmically plotted.

The growing importance of water power stations and the development of large power units have made desirable the extension of the original chapter on turbines. The principles of similarity have been applied to turbines and their models, and the problem of the surge tank has been dealt with in a brief fundamental manner.

The original chapter on pumps has been divided into two chapters, the one on centrifugal pumps and the other dealing with reciprocating pumps.

The original intention of the book has been preserved throughout. It might have been shortened very considerably if the author had simply been content to give particular results which can be used to solve practical problems with a considerable degree of confidence. Such a procedure would have defeated the author's

purpose of making the book not only immediately valuable to practising engineers but also of being a real help to the serious student and to enable readers to appreciate the nature of the evidence upon which results are based, and in some measure also to trace the development of an interesting subject through a century of real progress.

The author would also take this opportunity of expressing his appreciation of the kindness of those who have from time to time materially assisted by pointing out arithmetical errors and making other suggestions.

As proved to be the case when the original book was written, so in the present volume the difficulty of selection, without going far beyond the original purpose of the book and keeping the volume within reasonable dimensions, has not been easy.

F. C. LEA.

BIRMINGHAM,

CONTENTS.

CHAPTER I.

FLUIDS AT REST.

CHAPTER II.

FLOATING BODIES.

CHAPTER III.

FLUIDS IN MOTION.

CHAPTER IV.

FLOW OF WATER THROUGH ORIFICES AND OVER WEIRS.

CHAPTER V.

FLOW THROUGH PIPES.

CHAPTER VI.

FLOW IN OPEN CHANNELS.

CHAPTER VII.

GAUGING THE FLOW OF WATER.

CHAPTER VIII.

IMPACT OF WATER ON VANES.

CHAPTER IX.

WATER WHEELS AND TURBINES.

CHAPTER X.

CENTRIFUGAL PUMPS.

CHAPTER XI.

RECIPROCATING PUMPS.

CHAPTER XII.

HYDRAULIC MACHINES.

CHAPTER XIII.

RESISTANCE TO THE MOTION OF BODIES IN WATER.

CHAPTER XIV.

STREAM LINE MOTION.

HYDRAULICS.

CHAPTER I.

FLUIDS AT REST.

1. Introduction.

The science of Hydraulics, in its limited sense and as originally understood, had for its object the consideration of the laws regulating the flow of water in channels, but it has come to have a wider significance, and it now embraces the study of the principles involved in the pumping of water and other fluids and their application to the working of different kinds of machines.

The practice of conveying water along artificially constructed channels for irrigation and domestic purposes dates back into great antiquity. The Egyptians constructed transit canals for warlike purposes, as early as 3000 B.C., and works for the better utilisation of the waters of the Nile were carried out at an even earlier date. According to Josephus, the gardens of Solomon were made beautiful by fountains and other water works. The aqueducts of Rome*, some of which were constructed more than 2000 years ago, were among the "wonders of the world," and to-day the city of Athens is partially supplied with water by means of an aqueduct constructed probably some centuries before the Christian era.

The science of Hydraulics, however, may be said to have only come into existence at the end of the seventeenth century when the attention of philosophers was drawn to the problems involved in the design of the fountains, which came into considerable use in Italian landscape gardens, and which, according to Bacon, were of "great beauty and refreshment." The founders were principally Torricelli and Mariotte from the experimental, and Bernoulli from the theoretical, side. The experiments of Torricelli and of Mariotte to determine the discharge of water through orifices in the sides of tanks and through short pipes, probably

* *The Aqueducts of Rome.* Frontinus, translated by Herschel.

mark the first attempts to determine the laws regulating the flow of water, and Torricelli's famous theorem may be said to be the foundation of modern Hydraulics. But, as shown at the end of the chapter on flow in channels, it was not until a century later that any serious attempt was made to give expression to tne laws regulating the flow in long pipes and channels, and practically the whole of the knowledge we now possess has been acquired during the last century. Simple machines for the utilisation of the power of natural streams have been made for many centuries, examples of which are to be found in an interesting work *Hydrostatiks and Hydrauliks* written in English by Stephen Swetzer in 1729, but it has been reserved to the workers of the nineteenth century to develope all kinds of hydraulic machinery, and to discover the principles involved in their correct design. Poncelet's enunciation of the correct principles which should regulate the design of the "floats" or buckets of water wheels, and Fourneyron's application of the triangle of velocities to the design of turbines, marked a distinct advance, but it must be admitted that the enormous development of this class of machinery, and the very high standard of efficiency obtained, is the outcome, not of theoretical deductions, but of experience, and the careful, scientific interpretation of the results of experiments.

2. Fluids and their properties.

The name fluid is given, in general, to a body which offers very small resistance to deformation, and which takes the shape of the body with which it is in contact.

If a solid body rests upon a horizontal plane, a force is required to move the body over the plane, or to overcome the friction between the body and the plane. If the plane is very smooth the force may be very small, and if we conceive the plane to be perfectly smooth the smallest imaginable force would move the body.

If in a fluid, a horizontal plane be imagined separating the fluid into two parts, the force necessary to cause the upper part to slide over the lower will be very small indeed, and any force, however small, applied to the fluid above the plane and parallel to it, will cause motion, or in other words will cause a deformation of the fluid.

Similarly, if a very thin plate be immersed in the fluid in any direction, the plate can be made to separate the fluid into two parts by the application to the plate of an infinitesimal force, and in the imaginary perfect fluid this force would be zero.

Viscosity. Fluids found in nature are not perfect and are said to have viscosity; but when they are at rest the conditions of equilibrium can be obtained, with sufficient accuracy, on the assumption that they are perfect fluids, and that therefore no tangential stresses can exist along any plane in a fluid. This branch of the study of fluids is called Hydrostatics; when the laws of movement of fluids are considered, as in Hydraulics, these tangential, or frictional forces have to be taken into consideration.

3. Compressible and incompressible fluids.

There are two kinds of fluids, gases and liquids, or those which are easily compressed, and those which are compressed with difficulty. The amount by which the volumes of the latter are altered for a very large variation in the pressure is so small that in practical problems this variation is entirely neglected, and they are therefore considered as incompressible fluids.

In this volume only incompressible fluids are considered, and attention is confined, almost entirely, to the one fluid, water.

4. Density and specific gravity.

The density of any substance is the weight of unit volume at the standard temperature and pressure.

The specific gravity of any substance at any temperature and pressure is the ratio of the weight of unit volume to the weight of unit volume of pure water at the standard temperature and pressure.

The variation of the volume of liquid fluids, with the pressure, as stated above, is negligible, and the variation due to changes of temperature, such as are ordinarily met with, is so small, that in practical problems it is unnecessary to take it into account.

In the case of water, the presence of salts in solution is of greater importance in determining the density than variations of temperature, as will be seen by comparing the densities of sea water and pure water given in the following table.

TABLE I.

Useful data.

One cubic foot of water at 39·1° F. weighs 62·425 lbs.
" " " 60° F. " 62·36 "
One cubic foot of average sea water at 60° F. weighs 64 lbs.
One gallon of pure water at 60° F. weighs 10 lbs.
One gallon of pure water has a volume of 277·25 cubic inches.
One ton of pure water at 60° F. has a volume of 35·9 cubic feet.

Table of densities of pure water.

Temperature Degrees Fahrenheit	Density
32	·99987
39·1	1·000000
50	0·99973
60	0·99905
80	0·99664
104	0·99233

From the above it will be seen that in practical problems it will be sufficiently near to take the weight of one cubic foot of fresh water as 62·4 lbs., one gallon as 10 pounds, 6·24 gallons in a cubic foot, and one cubic foot of sea water as 64 pounds.

5. Hydrostatics.

A knowledge of the principles of hydrostatics is very helpful in approaching the subject of hydraulics, and in the wider sense in which the latter word is now used it may be said to include the former. It is, therefore, advisable to consider the laws of fluids at rest.

There are two cases to consider. First, fluids at rest under the action of gravity, and second, those cases in which the fluids are at rest, or are moving very slowly, and are contained in closed vessels in which pressures of any magnitude act upon the fluid, as, for instance, in hydraulic lifts and presses.

6. Intensity of pressure.

The intensity of pressure at any point in a fluid is the pressure exerted upon unit area, if the pressure on the unit area is uniform and is exerted at the same rate as at the point.

Consider any little element of area a, about a point in the fluid, and upon which the pressure is uniform.

If P is the total pressure on a, the Intensity of Pressure p, is then

$$p = \frac{P}{a},$$

or when P and a are indefinitely diminished,

$$p = \frac{\partial P}{\partial a}.$$

7. The pressure at any point in a fluid is the same in all directions.

It has been stated above that when a fluid is at rest its resistance to lateral deformation is practically zero and that on any plane in the fluid tangential stresses cannot exist. From this experimental fact it follows that the pressure at any point in the fluid is the same in all directions.

Consider a small wedge ABC, Fig. 1, floating immersed in a fluid at rest.

Since there cannot be a tangential stress on any of the planes AB, BC, or AC, the pressures on them must be normal.

Let p, p_1 and p_2 be the intensities of pressures on these planes respectively.

The weight of the wedge will be very small compared with the pressures on its faces and may be neglected.

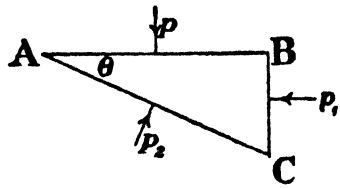

Fig. 1.

As the wedge is in equilibrium under the forces acting on its three faces, the resolved components of the force acting on AC in the directions of p and p_1 must balance the forces acting on AB and BC respectively.

Therefore $$p_2 . AC \cos\theta = p . AB,$$
and $$p_2 AC \sin\theta = p_1 BC.$$

But $AB = AC \cos\theta$, and $BC = AC \sin\theta$.

Therefore $$p = p_1 = p_2.$$

8. The pressure on any horizontal plane in a fluid must be constant.

Consider a small cylinder of a fluid joining any two points A and B on the same horizontal plane in the fluid.

Since there can be no tangential forces acting on the cylinder parallel to the axis, the cylinder must be in equilibrium under the pressures on the ends A and B of the cylinder, and since these are of equal area, the pressure must be the same at each end of the cylinder.

9. Fluids at rest, with the free surface horizontal.

The pressure per unit area at any depth h below the free surface of a fluid due to the weight of the fluid is equal to the weight of a column of fluid of height h and of unit sectional area.

Let the pressure per unit area acting on the surface of the fluid be p lbs. If the fluid is in a closed vessel, the pressure p may have any assigned value, but if the free surface is exposed to the atmosphere, p will be the atmospheric pressure.

If a small open tube AB, of length h, and cross sectional area a, be placed in the fluid, the weight per unit volume of which is w lbs., with its axis vertical, and its upper end A coincident with the surface of the fluid, the weight of fluid in the cylinder must be $w . a . h$ lbs. The pressure acting on the end A of the column is pa lbs.

Since there cannot be any force acting on the column parallel to the sides of the tube, the force of wah lbs. $+ pa$ lbs. must be kept in equilibrium by the pressure of the external fluid acting on the fluid in the cylinder at the end B.

The pressure per unit area at B, therefore,

$$= \frac{wah + pa}{a} = (wh + p) \text{ lbs.}$$

The pressure per unit area, therefore, due to the weight of the fluid only is wh lbs.

In the case of water, w may be taken as 62·40 lbs. per cubic foot and the pressure per sq. foot at a depth of h feet is, therefore, $62{\cdot}40h$ lbs., and per sq. inch $\cdot 433h$ lbs.

It should be noted that the pressure is independent of the form of the vessel, and simply depends upon the vertical depth of the point considered below the surface of the fluid. This can be illustrated by the different vessels shown in Fig. 2. If these were all connected together by means of a pipe, the fluid when at rest would stand at the same level in all of them, and on any horizontal plane AB the pressure would be the same.

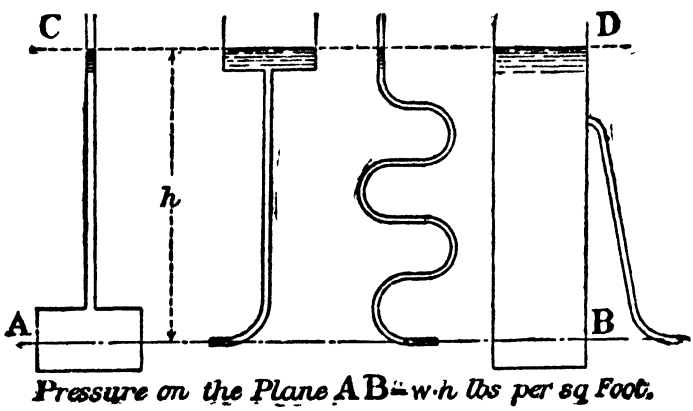

Fig. 2.

If now the various vessels were sealed from each other by closing suitable valves, and the pipe taken away without disturbing the level CD in any case, the intensity of pressure on AB would remain unaltered, and would be, in all cases, equal to wh.

Example. In a condenser containing air and water, the pressure of the air is 2 lbs. per sq. inch absolute. Find the pressure per sq. foot at a point 3 feet below the free surface of the water.

$$p = 2 \times 144 + 3 \times 62{\cdot}4$$
$$= 475{\cdot}2 \text{ lbs. per sq. foot.}$$

10. Pressures measured in feet of water. Pressure head.

It is convenient in hydrostatics and hydraulics to express the pressure at any point in a fluid in feet of the fluid instead of pounds per sq. foot or sq. inch. It follows from the previous section that if the pressure per sq. foot is p lbs. the equivalent pressure in feet of water, or the pressure head, is $h = \frac{p}{w}$ ft. and for any other fluid having a specific gravity ρ, the pressure per sq. foot for a head h of the fluid is $p = w \cdot \rho \cdot h$, or $h = \frac{p}{w\rho}$.

11. Piezometer tubes.

The pressure in a pipe or other vessel can conveniently be measured by fixing a tube in the pipe and noting the height to which the water rises in the tube.

Such a tube is called a pressure, or piezometer, tube.

The tube need not be made straight but may be bent into any form and carried, within reasonable limits, any distance horizontally.

The vertical rise h of the water will be always

$$h = \frac{p}{w},$$

where p is the pressure per sq. foot in the pipe.

If instead of water, a liquid of specific gravity ρ is used the height h to which the liquid will rise in the tube is

$$h = \frac{p}{w \cdot \rho}.$$

Example. A tube having one end open to the atmosphere is fitted into a pipe containing water at a pressure of 10 lbs. per sq. inch above the atmosphere. Find the height to which the water will rise in the tube.

The water will rise to such a height that the pressure at the end of the tube in the pipe due to the column of water will be 10 lbs. per sq. inch.

Therefore $$h = \frac{10 \times 144}{w} = 23{\cdot}08 \text{ feet.}$$

12. The barometer.

The method of determining the atmospheric pressure by means of the barometer can now be understood.

If a tube about 3 feet long closed at one end be completely filled with mercury, Fig. 3, and then turned into a vertical position with its open end in a vessel containing mercury, the liquid in the tube falls until the length h of the column is about 30 inches above the surface of the mercury in the vessel.

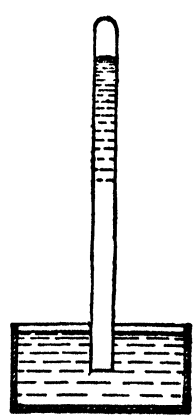

Fig. 3.

Since the pressure p on the top of the mercury is now zero, the pressure per unit area acting on the section of the tube, level with the surface of the mercury in the vessel, must be equal to the weight of a column of mercury of height h.

The specific gravity of the mercury is 13·596 at the standard temperature and pressure, and therefore the atmospheric pressure per sq. inch, p_a, is,

$$p_a = \frac{30'' \times 13{\cdot}596 \times 62{\cdot}4}{12 \times 144} = 14{\cdot}7 \text{ lbs. per sq. inch.}$$

Expressed in feet of water,

$$h = \frac{14{\cdot}7 \times 144}{62{\cdot}4} = 33{\cdot}92 \text{ feet.}$$

This is so near to 34 feet that for the standard atmospheric pressure this value will be taken throughout this book.

A similar tube can be conveniently used for measuring low pressures, lighter liquids being used when a more sensitive gauge is required.

13. The differential gauge.

A more convenient arrangement for measuring pressures, and one of considerable utility in many hydraulic experiments, is known as the differential gauge.

Let ABCD, Fig. 4, be a simple U tube containing in the lower part some fluid of known density.

If the two limbs of the tube are open to the atmosphere the two surfaces of the fluid will be in the same horizontal plane.

If, however, into the limbs of the tube a lighter fluid, which does not mix with the lower fluid, be poured until it rises to C in one tube and to D in the other, the two surfaces of the lower fluid will now be at different levels.

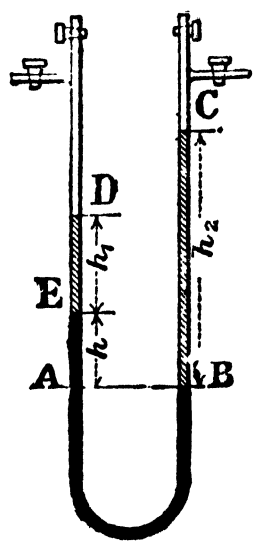

Fig. 4.

Let B and E be the common surfaces of the two fluids, h being their difference of level, and h_1 and h_2 the heights of the free surfaces of the lighter fluid above E and B respectively.

Let p be the pressure of the atmosphere per unit area, and d and d_1 the densities of the lower and upper fluids respectively. Then, since upon the horizontal plane AB the fluid pressure must be constant,

$$p + d_1 h_2 = p + d_1 h_1 + dh,$$

or

$$d_1 (h_2 - h_1) = dh.$$

If now, instead of the two limbs of the U tube being open to the atmosphere, they are connected by tubes to closed vessels in which the pressures are p_1 and p_2 pounds per sq. foot respectively, and h_1 and h_2 are the vertical lengths of the columns of fluid above E and B respectively, then

$$p_2 + d_1 . h_2 = p_1 + d_1 . h_1 + d . h,$$

or

$$p_2 - p_1 = d . h - d_1 (h_2 - h_1).$$

An application of such a tube to determine the difference of pressure at two points in a pipe containing flowing water is shown in Fig. 88, page 116.

Fluids generally used in such U *tubes.* In hydraulic experiments the upper part of the tube is filled with water, and therefore the fluid in the lower part must have a greater density than water. When the difference of pressure is fairly large, mercury is generally used, the specific gravity of which is 13·596. When the difference of pressure is small, the height h is difficult to measure with precision, so that, if this form of gauge is to be used, it is desirable to replace the mercury by a lighter liquid. Carbon bisulphide has been used but its action is sluggish and the meniscus between it and the water is not always well defined. Nitro-benzine gives good results, its principal fault being that the falling meniscus does not very quickly assume a definite shape.

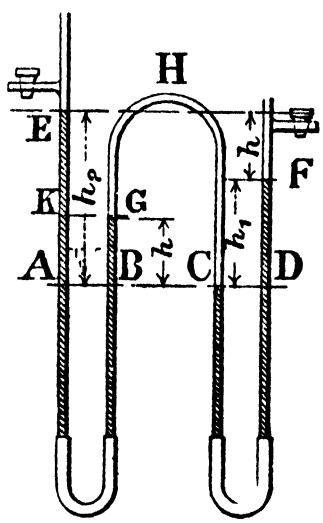

Fig. 5.

The inverted air gauge. A more sensitive gauge, than the mercury gauge, can be made by inverting a U tube and enclosing in the upper part a certain quantity of air as in the tube BHC, Fig. 5.

Let the pressure at D in the limb DF be p_1 pounds per square foot, equivalent to a head h_1 of the fluid in the lower part of the gauge, and at A in the limb AE let the pressure be p_2, equivalent to a head h_2. Let h be the difference of level of G and C.

Then if CHG contains air, and the weight of the air be neglected, being very small, the pressure at C must equal the pressure at G; and since in a fluid the pressure on any horizontal plane is constant the pressure at C is equal to the pressure at D, and the pressure at A equal to the pressure at B. Again the pressure at G is equal to the pressure at K.

Therefore

$$h_2 - h = h_1,$$

or

$$p_2 - p_1 = \rho w . h.$$

If the fluid is water ρ may then be taken as unity; for a given difference of pressure the value of h will clearly be much greater than for the mercury gauge, and it has the further advantage that h gives directly the difference of pressure in feet of water. The temperature of the air in the tube does not affect the readings, as any rise in temperature will simply depress the two columns without affecting the value of h.

The inverted oil gauge. A still more sensitive gauge can however be obtained by using, in the upper part of the tube, an oil lighter than water instead of air, as shown in Fig. 6.

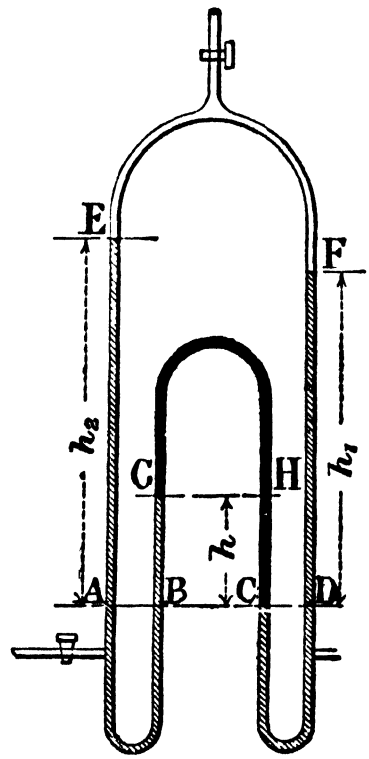

Fig. 6.

Let p_1 and p_2 be the pressures in the two limbs of the tube on a given horizontal plane AD, h_1 and h_2 being the equivalent heads of water. The oil in the bent tube will then take up some such position as shown, the plane AD being supposed to coincide with the lower surface C.

Then, since upon any horizontal plane in a homogeneous fluid the pressure must be constant, the pressures at G and H are equal and also those at D and C.

Let ρ_1 be the specific gravity of the water, and ρ of the oil.

Then $\rho_1 h_1 - \rho h = \rho_1 (h_2 - h)$.

Therefore $h(\rho_1 - \rho) = \rho_1 (h_2 - h_1)$

and
$$h = \frac{\rho_1 (h_2 - h_1)}{(\rho_1 - \rho)} \quad \text{.....(1).}$$

Substituting for h_1 and h_2 the values

$$h_1 = \frac{p_1}{w\rho_1}, \text{ and } h_2 = \frac{p_2}{w\rho_1},$$

$$h = \frac{p_2 - p_1}{w \,.\, (\rho_1 - \rho)} \quad \text{.....(2),}$$

or
$$p_2 - p_1 = w \,.\, (\rho_1 - \rho)\, h \quad \text{.....(3).}$$

From (2) it is evident that, if the density of the oil is not very different from that of the water, h may be large for very small differences of pressure. Williams, Hubbell and Fenkell* found that either kerosene, gasoline, or sperm oil gave excellent results, but sperm oil was too sluggish in its action for rapid work.

* *Proceedings Am.S.C.E.*, Vol. XXVII. p. 384.

Kerosene gave the best results. The author has used mineral oils lighter than water of specific gravities varying from 0·78 to 0·96 and heavier than water of specific gravities from 1·1 to 1·2.

Temperature coefficient of the inverted oil gauge. Unlike the inverted air gauge the oil gauge has a considerable temperature coefficient, as will be seen from the table of specific gravities at various temperatures of water and the kerosene and gasoline used by Williams, Hubbell and Fenkell.

In this table the specific gravity of water is taken as unity at 60° F.

	Water			Kerosene			Gasoline		
Temperature °F.	40	60	100	40	60	100	40	60	80
Specific gravity	1·00092	1·0000	·9941	·7955	·7879	·7725	·72147	·71587	·70547

The calibration of the inverted oil gauge. An arrangement similar to that shown in Fig. 6 can conveniently be used for calibrating these gauges.

The difference of level of E and F clearly gives the difference of head acting on the plane AD in feet of water, and this from equation (1) equals $\frac{h(\rho_1 - \rho)}{\rho_1}$.

Water is put into AE and FD so that the surfaces E and F are on the same level, the common surfaces of the oil and the water also being on the same level, this level being zero for the oil. Water is then run out of FD until the surface F is exactly 1 inch below E and a reading for h taken. The surface F is again lowered 1 inch and a reading of h taken. This process is continued until F is lowered as far as convenient, and then the water in EA is drawn out in a similar manner. When E and F are again level the oil in the gauge should read zero.

14. Transmission of fluid pressure.

If an external pressure be applied at any point in a fluid, it is transmitted equally in all directions through the whole mass. This is proved experimentally by means of a simple apparatus such as shown in Fig. 7.

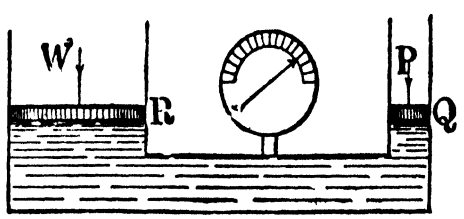

Fig. 7.

If a pressure P is exerted upon a small piston Q of a sq. inches

area, the pressure per unit area $p = \frac{P}{a}$, and the piston at R on the same level as Q, which has an area A, can be made to lift a load W equal to $A\frac{P}{a}$; or the pressure per sq. inch at R is equal to the pressure at Q. The piston at R is assumed to be on the same level as Q so as to eliminate the consideration of the small differences of pressure due to the weight of the fluid.

If a pressure gauge is fitted on the connecting pipe at any point, and p is so large that the pressure due to the weight of the fluid may be neglected, it will be found that the intensity of pressure is p. This result could have been anticipated from that of section 8.

Upon this simple principle depends the fact that enormous forces can be exerted by means of hydraulic pressure.

If the piston at Q is of small area, while that at R is large, then, since the pressure per sq. inch is constant throughout the fluid,

$$\frac{W}{P} = \frac{A}{a},$$

or a very large force W can be overcome by the application of a small force P. A very large mechanical advantage is thus obtained.

It should be clearly understood that the rate of doing work at W, neglecting any losses, is equal to that at P, the distance moved through by W being to that moved through by P in the ratio of P to W, or in the ratio of a to A.

Example. A pump ram has a stroke of 3 inches and a diameter of 1 inch. The pump supplies water to a lift which has a ram of 5 inches diameter. The force driving the pump ram is 1500 lbs. Neglecting all losses due to friction etc., determine the weight lifted, the work done in raising it 5 feet, and the number of strokes made by the pump while raising the weight.

Area of the pump ram = ·7854 sq. inch.
Area of the lift ram = 19·6 sq. inches.

Therefore $W = \frac{19\cdot6 \times 1500}{\cdot7854} = 37{,}500$ lbs.

Work done $= 37{,}500 \times 5 = 187{,}500$ ft. lbs.

Let N equal the number of strokes of the pump ram.

Then $N \times \frac{3}{12} \times 1500$ lbs. $= 187{,}500$ ft. lbs.

and $N = 500$ strokes.

15. Total or whole pressure.

The whole pressure acting on a surface is the sum of all the normal pressures acting on the surface. If the surface is plane all the forces are parallel, and the whole pressure is the sum of these parallel forces.

Let any surface, which need not be a plane, be immersed in a fluid. Let A be the area of the wetted surface, and h the pressure head at the centre of gravity of the area. If the area is immersed in a fluid the pressure on the surface of which is zero, the free surface of the fluid will be at a height h above the centre of gravity of the area. In the case of the area being immersed in a fluid, the surface of which is exposed to a pressure p, and below which the depth of the centre of gravity of the area is h_0, then

$$h = h_0 + \frac{p}{w}.$$

If the area exposed to the fluid pressure is one face of a body, the opposite face of which is exposed to the atmospheric pressure, as in the case of the side of a tank containing water, or the masonry dam of Fig. 14, or a valve closing the end of a pipe as in Fig. 8, the pressure due to the atmosphere is the same on the two faces and therefore may be neglected.

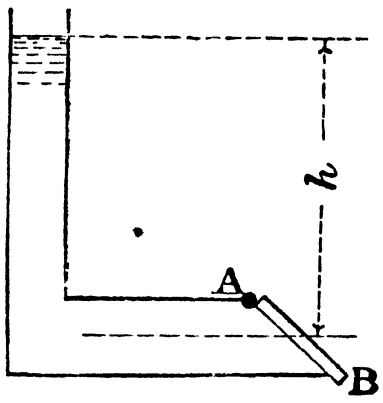

Fig. 8.

Let w be the weight of a cubic foot of the fluid. Then, the whole pressure on the area is

$$P = w \,.\, A \,.\, h.$$

If the surface is in a horizontal plane the theorem is obviously true, since the intensity of pressure is constant and equals $w \,.\, h$.

In general, imagine the surface, Fig. 9, divided into a large number of small areas a, a_1, a_2 ....

Let x be the depth below the free surface FS, of any element of area a; the pressure on this element $= w \,.\, x \,.\, a$.

The whole pressure $P = \Sigma w \,.\, x \,.\, a$.

But w is constant, and the sum of the moments of the elements of the area about any axis equals the moment of the whole area* about the same axis, therefore

$$\Sigma x \,.\, a = A \,.\, h,$$

and

$$P = w \,.\, A \,.\, h.$$

16. Centre of pressure.

The centre of pressure of any plane surface acted upon by a fluid is the point of action of the resultant pressure acting upon the surface.

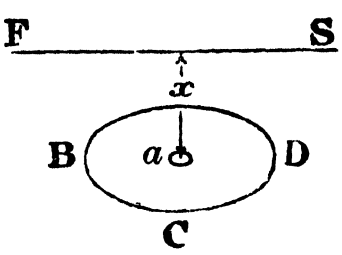

Fig. 9.

Depth of the centre of pressure. Let DBC, Fig. 9, be any plane surface exposed to fluid pressure.

* See text-books on Mechanics.

Let A be the area, and h the pressure head at the centre of gravity of the surface, or if FS is the free surface of the fluid, h is the depth below FS of the centre of gravity.

Then, the whole pressure

$$P = w \,.\, A \,.\, h.$$

Let X be the depth of the centre of pressure.

Imagine the surface, as before, divided into a number of small areas a, a_1, a_2, ... etc.

The pressure on any element a

$$= w \,.\, a \,.\, x,$$

and

$$P = \Sigma wax.$$

Taking moments about FS,

$$P \,.\, X = (wax^2 + wa_1x_1^2 + \ldots)$$

$$= \Sigma wax^2,$$

or

$$X = \frac{\Sigma wax^2}{wAh}$$

$$= \frac{\Sigma ax^2}{Ah}.$$

When the area is in a vertical plane, which intersects the surface of the water in FS, Σax^2 is the "second moment" of the area about the axis FS, or what is sometimes called the moment of inertia of the area about this axis.

Therefore, the depth of the centre of pressure of a vertical area below the free surface of the fluid

$$= \frac{\text{moment of inertia of the area about an axis in its own plane and in the free surface}}{\text{area} \times \text{the depth of the centre of gravity}},$$

or, if I is the moment of inertia,

$$X = \frac{I}{A \,.\, h}.$$

Moment of Inertia about any axis. Calling I_0 the Moment of Inertia about an axis through the centre of gravity, and I the Moment of Inertia about any axis parallel to the axis through the centre of gravity and at a distance h from it,

$$I = I_0 + Ah^2.$$

Examples. (1) Area is a rectangle breadth b and depth d.

$$P = w \,.\, b \,.\, d \,.\, h,$$

$$I = \frac{bd^3}{12} + bdh^2,$$

$$X = \frac{\frac{bd^3}{12} + bdh^2}{bdh}$$

$$= \frac{d^2}{12h} + h.$$

If the free surface of the water is level with the upper edge of the rectangle, $h=\frac{d}{2}$, and $X=\frac{2}{3}.d$.

(2) Area is a circle of radius R.

$$P=w\pi R^2 . h,$$

$$I=\frac{\pi R^4}{4}+\pi R^2 . h^2,$$

$$X=\frac{\frac{\pi R^4}{4}+\pi R^2 h^2}{\pi R^2 h}$$

$$=\frac{R^2}{4h}+h.$$

If the top of the circle is just in the free surface or $h=R$,

$$X=\tfrac{5}{4}R.$$

TABLE II.

Table of Moments of Inertia of areas.

	Form of area	Moment of inertia about an axis AB through the C. of G. of the section
Rectangle	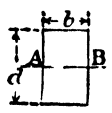	$\frac{1}{12}bd^3$
Triangle	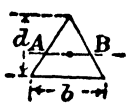	$\frac{1}{36}bd^3$
Circle	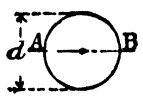	$\frac{\pi d^4}{64}$
Semicircle		About the axis AB $\frac{\pi r^4}{8}$
Parabola	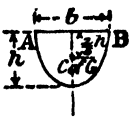	$\frac{b}{2}h^3$

17. Diagram of pressure on a plane area.

If a diagram be drawn showing the intensity of pressure on a plane area at any depth, the whole pressure is equal to the volume of the solid thus formed, and the centre of pressure of the area is found by drawing a line through the centre of gravity of this solid perpendicular to the area.

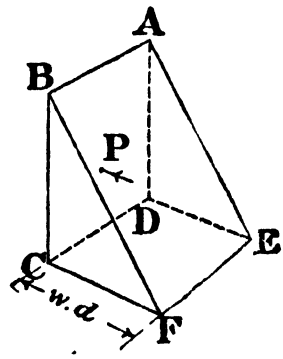

Fig. 10.

For a rectangular area ABCD, having the side AB in the surface of the water, the diagram of pressure is AEFCB, Fig. 10. The volume of AEFCB is the whole pressure and equals $\frac{1}{2}bd^2w$, b being the width and d the depth of the area.

Since the rectangle is of constant width, the diagram of pressure may be represented by the triangle BCF, Fig. 11, the resultant pressure acting through its centre of gravity, and therefore at $\frac{2}{3}d$ from the surface.

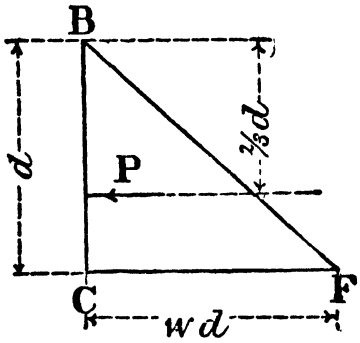

Fig. 11.

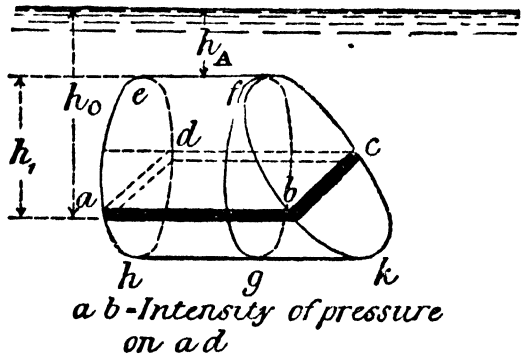

Fig 12.

For a vertical circle the diagram of pressure is as shown in Figs. 12 and 13. The intensity of pressure ab on any strip at a depth h_0 is wh_0. The whole pressure is the volume of the truncated cylinder $efkh$ and the centre of pressure is found by drawing a line perpendicular to the circle, through the centre of gravity of this truncated cylinder.

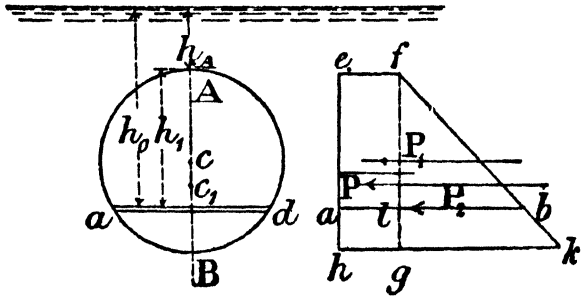

Fig. 13.

Another, and frequently a very convenient method of determining the depth of the centre of pressure, when the whole of the area is at some distance below the surface of the water, is to consider the pressure on the area as made up of a uniform pressure over the whole surface, and a pressure of variable intensity.

Take again, as an example, the vertical circle the diagrams of pressure for which are shown in Figs. 12 and 13.

At any depth h_0 the intensity of pressure on the strip *ad* is

$$wh_0 = wh_A + wh_1.$$

The pressure on any strip *ad* is, therefore, made up of a constant pressure per unit area wh_A and a variable pressure wh_1; and the whole pressure is equal to the volume of the cylinder *efgh*, Fig. 12, together with the circular wedge *fkg*.

The wedge *fkg* is equal to the whole pressure on a vertical circle, the tangent to which is in the free surface of the water and equals $w \,.\, A \,.\, \frac{d}{2}$, and the centre of gravity of this wedge will be at the same vertical distance from the centre of the circle as the centre of pressure when the circle touches the surface. The whole pressure P may be supposed therefore to be the resultant of two parallel forces P_1 and P_2 acting through the centres of gravity of the cylinder *efgh*, and of the circular wedge *fkg* respectively, the magnitudes of P_1 and P_2 being the volumes of the cylinder and the wedge respectively.

To find the centre of pressure on the circle AB it is only necessary to find the resultant of two parallel forces

$$P_1 = A \,.\, wh_A \text{ and } P_2 = w \,.\, A \left(\frac{d}{2}\right),$$

of which P_1 acts at the centre *c*, and P_2 at a point c_1 which is at a distance from A of $\frac{5}{4}r$.

Example. A masonry dam, Fig. 14, has a height of 80 feet from the foundations and the water face is inclined at 10 degrees to the vertical; find the whole pressure on the face due to the water per foot width of the dam, and the centre of pressure, when the water surface is level with the top of the dam. The atmospheric pressure may be neglected.

The whole pressure will be the force tending to overturn the dam, since the horizontal component of the pressure on AB due to the atmosphere will be counterbalanced by the horizontal components of the atmospheric pressure on the back of the dam. Since the pressure on the face is normal, and the intensity of pressure is proportional to the depth,

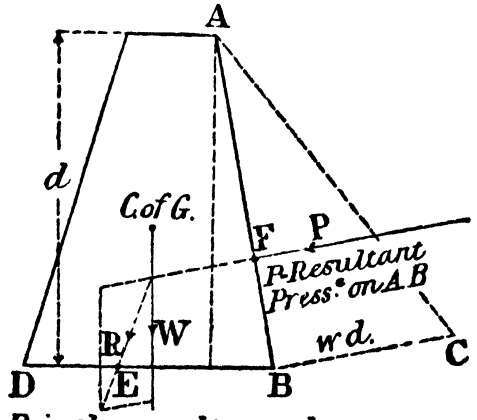

R is the resultant thrust on the base DB and acts at the point E.

Fig. 14.

the diagram of pressure on the face AB will be the triangle ABC, BC being equal to wd and perpendicular to AB.

The centre of pressure is at the centre of gravity of the pressure diagram and is, therefore, at $\frac{1}{3}$ the height of the dam from the base.

The whole pressure acts perpendicular to AB, and is equal to the area ABC

$$=\tfrac{1}{2}wd^2 \times \sec 10^\circ \text{ per foot width}$$

$$=\tfrac{1}{2}\,.\,62{\cdot}4 \times 6400 \times 1{\cdot}0154 = 202750 \text{ lbs.}$$

Combining P with W, the weight of the dam, the resultant thrust R on the base and its point of intersection E with the base is determined.

Example. A vertical flap valve closes the end of a pipe 2 feet diameter; the pressure at the centre of the pipe is equal to a head of 8 feet of water. To determine the whole pressure on the valve and the centre of pressure. The atmospheric pressure may be neglected.

The whole pressure $\quad P = w\pi R^2 \,.\, 8'$

$$= 62{\cdot}4 \,.\, \pi \,.\, 8 = 1570 \text{ lbs.}$$

Depth of *the centre of pressure.*

The moment of inertia about the free surface, which is 8 feet above the centre of the valve, is

$$I = \frac{\pi R^4}{4} + \pi R^2 \,.\, 8^2$$

$$= \tfrac{129}{2} \,.\, \pi.$$

Therefore $\quad X = \dfrac{\frac{129}{2} \,.\, \pi}{\pi \,.\, 8} = 8'\ 0\tfrac{3}{8}''.$

That is, $\frac{3}{8}$ inch below the centre of the *valve.*

The diagram of pressure is a truncated cylinder *efkh*, Figs. 12 and 13, *ef* and *hk* being the intensities of pressure at the top and bottom of the valve respectively.

Example. The end of a pontoon which floats in sea water is as shown in Fig. 15. The level WL of the water is also shown. Find the whole pressure on the end of the pontoon and the centre of pressure.

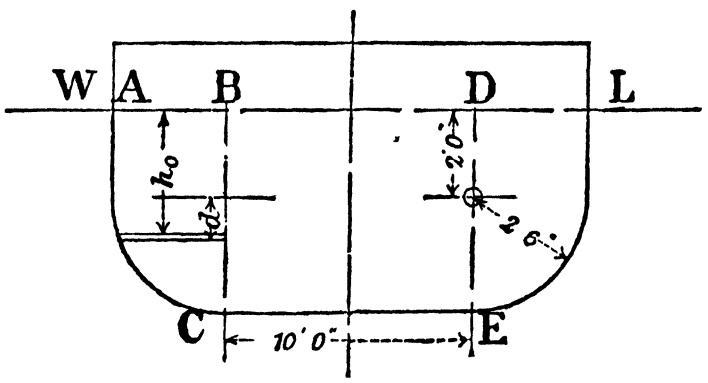

Fig. 15.

The whole pressure on BE

$$= 64 \text{ lbs.} \times 10' \times 4{\cdot}5' \times 2{\cdot}25' = 6480 \text{ lbs.}$$

The depth of the centre of pressure of BE is

$$\tfrac{2}{3} \,.\, 4{\cdot}5 = 3'.$$

The whole pressure on each of the rectangles above the quadrants

$$= w \,.\, 5 = 320 \text{ lbs.},$$

and the depth of the centre of pressure is $\frac{5}{2}$ feet.

The two quadrants, since they are symmetrically placed about the vertical centre line, may be taken together to form a semicircle. Let d be the distance below the centre of the semicircle of any element of area, the distance of the element below the surface being h_0.

Then the intensity of pressure at depth h_0

$$= w \,.\, 2 + w \,.\, d.$$

And the whole pressure on the semicircle is $P = w \,.\, \frac{\pi \,.\, R^2}{2} \,.\, 2' +$ the whole pressure of the semicircle when the diameter is in the surface of the water.

The distance of the centre of gravity of a semicircle from the centre of the circle is

$$\frac{4R}{3\pi} = 1{\cdot}06'.$$

Therefore,
$$P = w\pi R^2 + \frac{w\pi R^2}{2}\,\frac{4R}{3\pi}$$
$$= 201R^2 + 42{\cdot}66R^3 = 1256 + 666 \text{ lbs.}$$

The depth of the centre of pressure of the semicircle when the surface of the water is at the centre of the circle, is

$$X_s = \frac{\frac{\pi R^4}{8}}{\frac{\pi R^2}{2} \cdot \frac{4R}{3\pi}} = \frac{3 \,.\, \pi \,.\, R}{16} = 1{\cdot}47'.$$

And, therefore, the whole pressure on the semicircle is the sum of two forces, one of which, 1256 lbs., acts at the centre of gravity, or at a distance of 3·06′ from AD, and the other of 666 lbs. acts at a distance of 3·47′ from AD.

Then taking moments about AD the product of the pressure on the whole area into the depth of the centre of pressure is equal to the moments of all the forces acting on the area, about AD. The depth of the centre of pressure is, therefore,

$$X = \frac{6480 \text{ lbs.} \times 3' + 320 \text{ lbs.} \times 2 \times \frac{4}{3}' + 1256 \text{ lbs} \times 3{\cdot}06 + 666 \text{ lbs.} \times 3{\cdot}47'}{6480 + 640 + 1256 + 666}$$
$$= 2{\cdot}93 \text{ feet.}$$

EXAMPLES.

(1) A rectangular tank 12 feet long, 5 feet wide, and 5 feet deep is filled with water.

Find the total pressure on an end and side of the tank.

(2) Find the total pressure and the centre of pressure, on a vertical sluice, circular in form, 2 feet in diameter, the centre of which is 4 feet below the surface of the water. [M. S. T. Cambridge, 1901.]

(3) A masonry dam vertical on the water side supports water of 120 feet depth. Find the pressure per square foot at depths of 20 feet and 70 feet from the surface; also the total pressure on 1 foot length of the dam.

(4) A dock gate is hinged horizontally at the bottom and supported in a vertical position by horizontal chains at the top.

Height of gate 45 feet, width 30 ft. Depth of water at one side of the gate 32 feet and 20 feet on the other side. Find the tension in the chains. Sea-water weighs 64 pounds per cubic foot.

(5) If mercury is $13\frac{1}{2}$ times as heavy as water, find the height of a column corresponding to a pressure of 100 lbs. per square inch.

(6) A straight pipe 6 inches diameter has a right-angled bend connected to it by bolts, the end of the bend being closed by a flange.

The pipe contains water at a pressure of 700 lbs. per sq. inch. Determine the total pull in the bolts at both ends of the elbow.

(7) The end of a dock caisson is as shown in Fig. 16 and the water level is AB.

Determine the whole pressure and the centre of pressure.

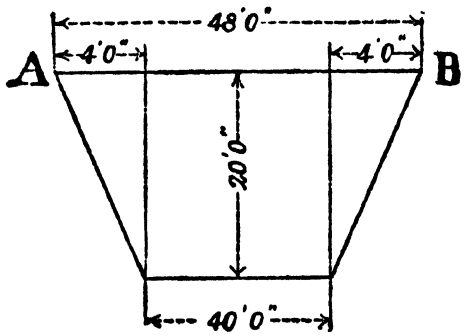

Fig. 16.

(8) An U tube contains oil having a specific gravity of 1·1 in the lower part of the tube. Above the oil in one limb is one foot of water, and above the other 2 feet. Find the difference of level of the oil in the two limbs.

(9) A pressure gauge, for use in a stokehold, is made of a glass U tube with enlarged ends, one of which is exposed to the pressure in the stokehold and the other connected to the outside air. The gauge is filled with water on one side, and oil having a specific gravity of 0·95 on the other—the surface of separation being in the tube below the enlarged ends. If the area of the enlarged end is fifty times that of the tube, how many inches of water pressure in the stokehold correspond to a displacement of one inch in the surface of separation? [Lond. Un. 1906.]

(10) An inverted oil gauge has its upper U filled with oil having a specific gravity of 0·7955 and the lower part of the gauge is filled with water. The two limbs are then connected to two different points on a pipe in which there is flowing water.

Find the difference of the pressure at the two points in the pipe when the difference of level of the oil surfaces in the limbs of the U is 15 inches.

(11) An opening in a reservoir dam is closed by a plate 8 feet square, which is hinged at the upper horizontal edge; the plate is inclined at an angle of 60° to the horizontal, and its top edge is 12 feet below the surface of the water. If this plate is opened by means of a chain attached to the centre of the lower edge, find the necessary pull in the chain if its line of action makes an angle of 45° with the plate. The weight of the plate is 400 pounds. [Lond. Un. 1905.]

(12) The width of a lock is 20 feet and it is closed by two gates at each end, each gate being 12′ long.

If the gates are closed and the water stands 16′ above the bottom on one side and 4′ on the other side, find the magnitude and position of the resultant pressure on each gate, and the pressure between the gates. Show also that the reaction at the hinges is equal to the pressure between the gates. One cubic foot of water = 62·5 lbs. [Lond. Un. 1905.]

CHAPTER II.

FLOATING BODIES.

18. Conditions of equilibrium.

When a body floats in a fluid the surface of the body in contact with the fluid is subject to hydrostatic pressures, the intensity of pressure on any element of the surface depending upon its depth below the surface. The resultant of the vertical components of these hydrostatic forces is called the buoyancy, and its magnitude must be exactly equal to the weight of the body, for if not the body will either rise or sink. Again the horizontal components of these hydrostatic forces must be in equilibrium amongst themselves, otherwise the body will have a lateral movement.

The position of equilibrium for a floating body is obtained when (*a*) the buoyancy is exactly equal to the weight of the body, and (*b*) the vertical forces—the weight and the buoyancy—act in the same vertical line, or in other words, in such a way as to produce no couple tending to make the body rotate.

Let G, Fig. 17, be the centre of gravity of a floating ship and BK, which does not pass through G, the line of action of the resultant of the vertical buoyancy forces. Since the buoyancy

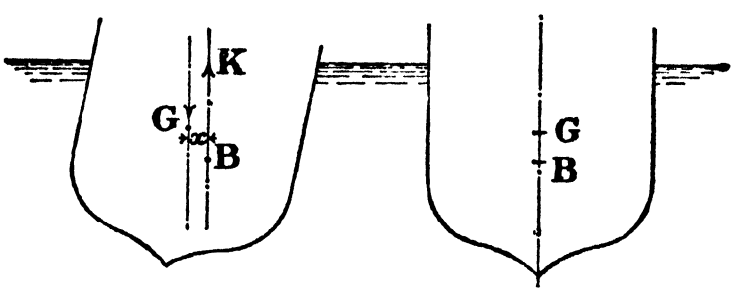

Fig. 17. Fig. 18.

must equal the weight of the ship, there are two parallel forces each equal to W acting through G and along BK respectively, and these form a couple of magnitude Wx, which tends to bring the ship into the position shown in Fig. 18, that is, so that BK

passes through G. The above condition (*b*) can therefore only be realised, when the resultant of the buoyancy forces passes through the centre of gravity of the body. If, however, the body is displaced from this position of equilibrium, as for example a ship at sea would be when made to roll by wave motions, there will generally be a couple, as in Fig. 17, acting upon the body, which should in all cases tend to restore the body to its position of equilibrium. Consequently the floating body will oscillate about its equilibrium position and it is then said to be in stable equilibrium. On the other hand, if when the body is given a small displacement from the position of equilibrium, the vertical forces act in such a way as to cause a couple tending to increase the displacement, the equilibrium is said to be unstable.

The problems connected with floating bodies acted upon by forces due to gravity and the hydrostatic pressures only, resolve themselves therefore into two,

(*a*) To find the position of equilibrium of the body.

(*b*) To find whether the equilibrium is stable.

19. Principle of Archimedes.

When a body floats freely in a fluid the weight of the body is equal to the weight of the fluid displaced.

Since the weight of the body is equal to the resultant of the vertical hydrostatic pressures, or to the buoyancy, this principle will be proved, if the weight of the water displaced is shown to be equal to the buoyancy.

Let ABC, Fig. 19, be a body floating in equilibrium, AC being in the surface of the fluid.

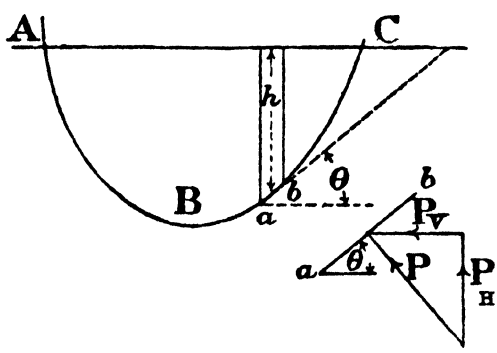

Fig. 19.

Consider any small element *ab* of the surface, of area *a* and depth *h*, the plane of the element being inclined at any angle θ to the horizontal. Then, if *w* is the weight of unit volume of the fluid, the whole pressure on the area *a* is *wha*, and the vertical component of this pressure is seen to be $wha \cos\theta$.

Imagine now a vertical cylinder standing on this area, the top of which is in the surface AC.

The horizontal sectional area of this cylinder is $a \cos \theta$, the volume is $ha \cos \theta$ and the weight of the water filling this volume is $wha \cos \theta$, and is, therefore, equal to the buoyancy on the area ab.

If similar cylinders be imagined on all the little elements of area which make up the whole immersed surface, the total volume of these cylinders is the volume of the water displaced, and the total buoyancy is, therefore, the weight of this displaced water.

If the body is wholly immersed as in Fig. 20 and the body is supposed to be made up of small vertical cylinders intersecting the surface of the body in the elements of area ab and $a'b'$, which are inclined to the horizontal at angles θ and ϕ and having areas a and a_1 respectively, the vertical component of the pressure on ab will be $wha \cos \theta$ and on $a'b'$ will be $wh_1a_1 \cos \phi$. But $a \cos \theta$ must equal $a_1 \cos \phi$, each being equal to the horizontal section of the small cylinder. The whole buoyancy is therefore

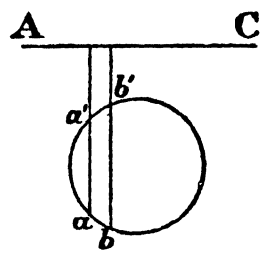

Fig. 20.

$$\Sigma wha \cos \theta - \Sigma wh_1a_1 \cos \phi,$$

and is again equal to the weight of the water displaced.

In this case if the fluid be assumed to be of constant density and the weight of the body as equal to the weight of the fluid of the same volume, the body will float at any depth. The modern submarine, when below the water, is an example of such a body. Tanks can be flooded to sink the boat and emptied by pumps to allow the boat to come to the surface. The vertical motion can also be assisted, as the boat moves forward, by hydroplanes fixed to the boat and the inclination of which to the horizontal is under control. If W is the weight of the water displaced and W_1 the weight of the boat at any instant, then assuming the velocities are small the vertical acceleration due to the difference in weight is

$$f = \frac{(W - W_1)\, g}{W_1} \text{ ft. per sec. per sec.}$$

20. Centre of buoyancy.

Since the buoyancy on any element of area is the weight of the vertical cylinder of the fluid above this area, and that the whole buoyancy is the sum of the weights of all these cylinders, it at once follows, that the resultant of the buoyancy forces must pass through the centre of gravity of the water displaced, and this point is, therefore, called the Centre of Buoyancy.

21. Condition of stability of equilibrium.

Let AND, Fig. 21, be the section made by a vertical plane containing G the centre of gravity and B the centre of buoyancy of a floating vessel, AD being the surface of the fluid when the centre of gravity and centre of buoyancy are in the same vertical line.

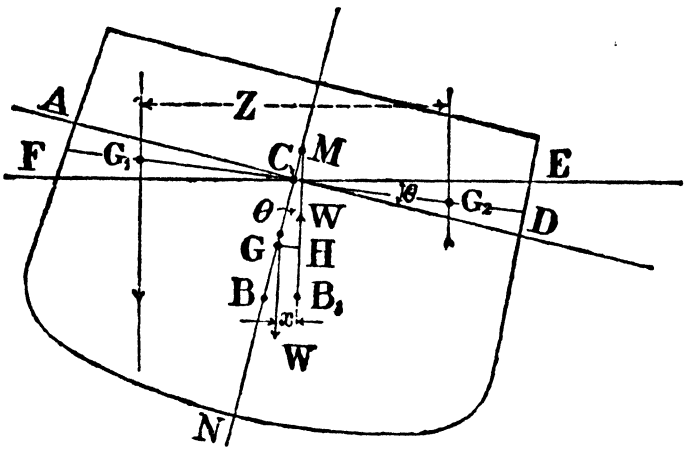

Fig. 21.

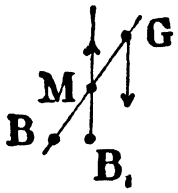

Fig. 22.

Let the vessel be heeled over about a horizonal axis, FE being now the fluid surface, and let B_1 be the new centre of buoyancy, the above vertical sectional plane being taken to contain G, B, and B_1. Draw B_1M, the vertical through B_1, intersecting the line GB in M. Then, if M is above G the couple $W.x$ will tend to restore the ship to its original position of equilibrium, but if M is below G, as in Fig. 22, the couple will tend to cause a further displacement, and the ship will either topple over, or will heel over into a new position of equilibrium.

In designing ships it is necessary that, for even large displacements such as may be caused by the rolling of the vessel, the point M shall be above G. To determine M, it is necessary to determine G and the centres of buoyancy for the two positions of the floating body. This in many cases is a long and somewhat tedious operation.

22. Small displacements. Metacentre.

When the angular displacement is small the point M is called the Metacentre, and the distance of M from G can be calculated.

Assume the angular displacement in Fig. 21 to be small and equal to θ.

Then, since the volume displacement is constant the volume of the wedge CDE must equal CAF, or in Fig. 23, C_1C_2DE must equal C_1C_2AF.

Let G_1 and G_2 be the centres of gravity of the wedges C_1C_2AF and C_1C_2DE respectively.

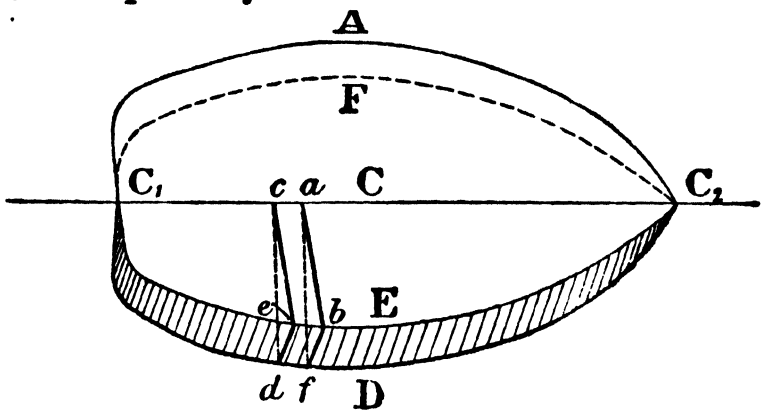

Fig. 23.

The heeling of the ship has the effect of moving a mass of water equal to either of these wedges from G_1 to G_2, and this movement causes the centre of gravity of the whole water displaced to move from B to B_1.

Let Z be the horizontal distance between G_1 and G_2, when FE is horizontal, and S the perpendicular distance from B to B_1M.

Let V be the total volume displacement, v the volume of the wedge and w the weight of unit volume of the fluid.

Then $$w.v.Z = w.V.S$$
$$= w.V.BM.\sin\theta.$$
Or, since θ is small, $$= w.V.BM.\theta \quad \text{.....(1).}$$
The restoring couple is
$$w.V.HG = w.V.GM.\theta$$
$$= w.V.(BM - BG)\theta$$
$$= w.v.Z - w.V.BG.\theta \quad \text{.....(2).}$$

But $w.v.Z$ = twice the sum of the moments about the axis C_2C_1, of all the elements such as $acdb$ which make up the wedge C_2C_1DE.

Taking ab as x, bf is $x\theta$, and if ac is ∂l, the volume of the element is $\frac{1}{2}x^2\theta.\partial l$.

The centre of gravity of the element is at $\frac{2}{3}x$ from C_1C_2.

Therefore $$w.v.Z = 2w\theta\int_0^L \frac{x^3dl}{3} \quad \text{.....(3).}$$

But, $\frac{x^3dl}{3}$ is the Second Moment or Moment of Inertia of the element of area $aceb$ about C_2C_1, and $2\int_0^L \frac{x^3dl}{3}$ is, therefore, the Moment of Inertia I of the water-plane area AC_1DC_2 about C_1C_2.

Therefore $$w.v.Z = w.I.\theta \quad \text{.....(4).}$$

The restoring couple is then

$$wI\theta - w.V.BG.\theta.$$

If this is positive, the equilibrium is stable, but if negative it is unstable.

Again since from (1)

$$wv.Z = w.V.BM.\theta,$$

therefore $$w.V.BM.\theta = wI\theta,$$

and $$BM = \frac{I}{V} \quad \text{.....(5).}$$

If BM is greater than BG the equilibrium is stable, if less than BG it is unstable, and the body will heel over until a new position of equilibrium is reached. If BG is equal to BM the equilibrium is said to be neutral.

The distance GM is called the Metacentric Height, and varies in various classes of ships from a small negative value to a positive value of 4 or 5 feet.

When the metacentric height is negative the ship heels until it finds a position of stable equilibrium. This heeling can be corrected by ballasting.

Example. A ship has a displacement of 15,400 tons, and a draught of 27 5 feet. The height of the centre of buoyancy from the bottom of the keel is 15 feet.

The moment of inertia of the horizontal section of the ship at the water line is 9,400,000 feet^4 units.

Determine the position of the centre of gravity that the metacentric height shall not be less than 4 feet in sea water.

$$BM = \frac{9{,}400{,}000 \times 64}{15{,}400 \times 2240}$$
$$= 17{\cdot}1 \text{ feet.}$$

Height of metacentre from the bottom of the keel is, therefore, 32 1 feet.

As long as the centre of gravity is not higher than 0·6 feet above the surface of the water, the metacentric height is more than 4 feet.

23. Stability of a rectangular pontoon.

Let RFJS, Fig. 24, be the section of the pontoon and G its centre of gravity.

Let VE be the surface of the water when the sides of the pontoon are vertical, and AL the surface of the water when the pontoon is given an angle of heel θ.

Then, since the weight of water displaced equals the weight of the pontoon, the area AFJL is equal to the area VFJE.

Let B be the centre of buoyancy for the vertical position, B being the centre of area of VFJE, and B_1 the centre of buoyancy for the new position, B_1* being the centre of area of AFJL. Then the line joining BG must be perpendicular to the surface VE and

* In the Fig., B_1 is not the centre of area of AFJL, as, for the sake of clearness, it is further removed from B than it actually should be.

is the direction in which the buoyancy force acts when the sides of the pontoon are vertical, and B_1M perpendicular to AL is the direction in which the buoyancy force acts when the pontoon is heeled over through the angle θ. M is the metacentre.

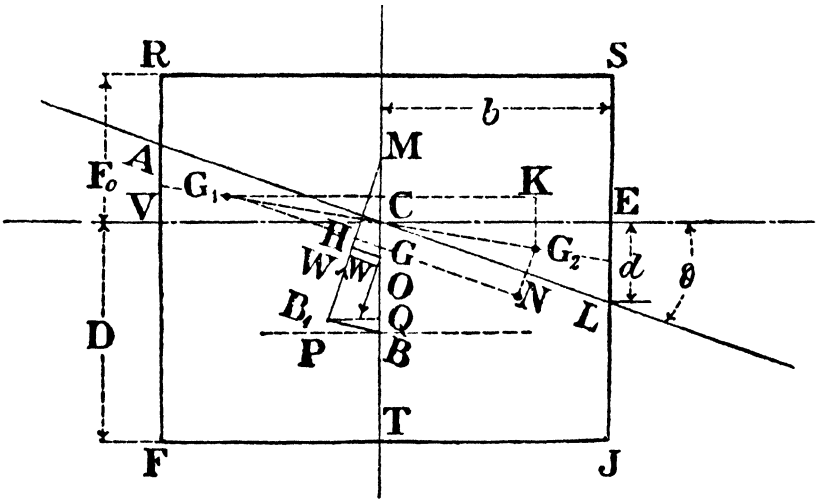

Fig. 24.

The forces acting on the pontoon in its new position are, W the weight of the pontoon acting vertically through G and an equal and parallel buoyancy force W through B_1.

There is, therefore, a couple, W . HG, tending to restore the pontoon to its vertical position.

If the line B_1H were to the right of the vertical through G, or in other words the point M was below G, the pontoon would be in unstable equilibrium.

The new centre of buoyancy B_1 can be found in several ways. The following is probably the simplest.

The figure AFJL is formed by moving the triangle, or really the wedge-shaped piece CEL to CVA, and therefore it may be imagined that a volume of water equal to the volume of this wedge is moved from G_2 to G_1. This will cause the centre of buoyancy to move parallel to G_1G_2 to a new position B_1, such that

$BB_1 \times$ weight of pontoon $= G_1G_2 \times$ weight of water in CEL.

Let b be half the breadth of the pontoon,

l the length,

D the depth of displacement for the upright position,

d the length LE, or AV,

and w the weight of a cubic foot of water.

Then, the weight of the pontoon

$$W = 2b \,.\, D \,.\, l \,.\, w$$

and the weight of the wedge CLE $= \frac{bd}{2} \times l \,.\, w.$

Therefore $$BB_1 . 2b . D = \frac{G_1G_2 . b . d}{2},$$

and $$BB_1 = \frac{d}{4D} G_1G_2.$$

Resolving BB_1 and G_1G_2, which are parallel to each other, along and perpendicular to BM respectively,

$$B_1Q = \frac{d}{4D} G_1K = \frac{d}{4D}\left(\frac{2}{3}2b\right) = \frac{bd}{3D} = \frac{b^2 \tan\theta}{3D},$$

and $$B_1P = B_1Q . \frac{G_2K}{G_1K} = \frac{bd}{3D}\frac{d}{2b} = \frac{d^2}{6D} = \frac{b^2 \tan^2\theta}{6D}.$$

To find the distance of the point M from G and the value of the restoring couple. Since B_1M is perpendicular to AL and BM to VE, the angle BMB_1 equals θ.

Therefore $$QM = B_1Q \cot\theta = \frac{bd}{3D}\cot\theta = \frac{b^2}{3D}.$$

Let z be the distance of the centre of gravity G from C.

Then $$QG = QC - z = BC - BQ - z$$
$$= \frac{D}{2} - \frac{b^2 \tan^2\theta}{6D} - z.$$

Therefore
$$GM = QM - QG = \frac{b^2}{3D} - \frac{D}{2} + \frac{b^2 \tan^2\theta}{6D} + z.$$

And since $$HG = GM \sin\theta,$$
the righting couple,
$$W . HG = W \sin\theta\left(\frac{b^2}{3D} - \frac{D}{2} + \frac{b^2 \tan^2\theta}{6D} + z\right).$$

The distance of the metacentre from the point B, is
$$QM + QB = B_1Q \cot\theta + \frac{b^2 \tan^2\theta}{6D}$$
$$= \frac{b^2}{3D} + \frac{b^2 \tan^2\theta}{6D}.$$

When θ is small, the term containing $\tan^2\theta$ is negligible, and
$$BM = \frac{b^2}{3D}.$$

This result can be obtained from formula (4) given in section 22.

I for the rectangle is $\frac{1}{12}l\,(2b)^3 = \frac{2}{3}lb^3$, and $V = 2bDl$.

Therefore $$BM = \frac{b^2}{3D}.$$

If BG is known, the metacentric height can now be found.

Example. A pontoon has a displacement of 200 tons. Its length is 50 feet. The centre of gravity is 1 foot above the centre of area of the cross section. Find the breadth and depth of the pontoon so that for an angular displacement of 10 degrees the metacentre shall not be less than 3 feet from the centre of gravity, and the free-board shall not be less than 2 feet.

Referring to Fig. 24, G is the centre of gravity of the pontoon and O is the centre of the cross section RJ.

Then,
$$GO = 1 \text{ foot},$$
$$F_0 = 2 \text{ feet},$$
$$GM = 3 \text{ feet}.$$

Let D be the depth of displacement. Then

$$D \times 2b \times 62{\cdot}4 \times 50 \text{ lbs.} = 200 \text{ tons} \times 2240 \text{ lbs.}$$

Therefore
$$Db = 71{\cdot}5 \quad \ldots\ldots\ldots\ldots\ldots\ldots\ldots\ldots\ldots\ldots (1).$$

The height of the centre of buoyancy B above the bottom of pontoon is

$$BT = \tfrac{1}{2}D.$$

Since the free-board is to be 2 feet,

$$OT = \tfrac{1}{2}(D+2).$$

Then
$$BO = 1' \text{ and } BG = 2'.$$

Therefore
$$BM = 5'.$$

But
$$BM = QM + BQ$$
$$= \frac{b^2}{3D} + \frac{b^2 \tan^2\theta}{6D} \quad \ldots\ldots\ldots\ldots\ldots\ldots\ldots\ldots (2).$$

Multiplying numerator and denominator by b, and substituting from equation (1)

$$\frac{b^3}{214{\cdot}5} + \frac{b^3 \tan^2\theta}{429} = 5',$$

from which
$$b^3(2 + (\cdot 176)^2) = 5 \times 429,$$

therefore
$$b = 10{\cdot}1 \text{ ft.},$$

and
$$D = 7{\cdot}1 \text{ ft.},$$

$$\left.\begin{array}{ll} \text{The breadth} & B = 20{\cdot}2 \text{ ft.} \\ \text{,, depth} & = 7{\cdot}1 \text{ ft.} \end{array}\right\} \textit{Ans.}$$

24. Stability of a floating vessel containing water.

If a vessel contains water with a free surface, as for instance the compartments of a floating dock, such as is described on page 31, the surface of the water in these compartments will remain horizontal as the vessel heels over, and the centre of gravity of the water in any compartment will change its position in such a way as to increase the angular displacement of the vessel.

In considering the stability of such vessels, therefore, the turning moments due to the water in the vessel must be taken into account.

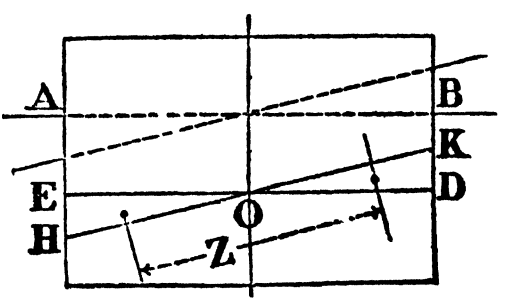

Fig. 25.

As a simple case consider the rectangular vessel, Fig. 25, which, when its axis is vertical, floats with the plane AB in the

surface of the fluid, DE being the surface of the fluid in the vessel.

When the vessel is heeled through an angle θ, the surface of fluid in the vessel is KH.

The effect has been, therefore, to move the wedge of fluid OEH to ODK, and the turning couple due to this movement is $w.v.Z$, v being the volume of either wedge and Z the distance between the centre of gravity of the wedges.

If $2b$ is the width of the vessel and l its length, v is $\frac{b^2}{2} l \tan \theta$.

If θ is small wvZ is equal to $wI\theta$, I being the moment of inertia of the water surface KH about an axis through O, as shown in section 22.

For the same width and length of water surface in the compartment, the turning couple is the same wherever the compartment is situated, for the centre of gravity of the wedge OHE, Fig. 26, is moved by the same amount in all cases.

If, therefore, there are free fluid surfaces in the floating vessel, for any small angle of heel θ, the tippling-moment due to these surfaces is $\Sigma wI\theta$, I being in all cases the moment of inertia of the fluid surface about its own axis of oscillation, or the axis through the centre of gravity of the surface.

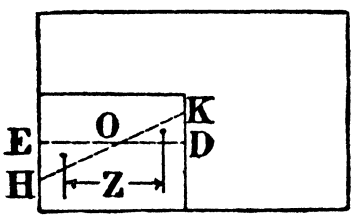

Fig. 26.

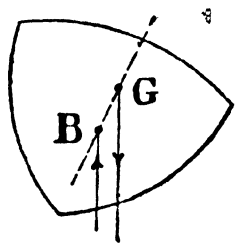

Fig. 27.

25. Stability of a floating body wholly immersed.

It has already been shown that a floating body wholly immersed in a fluid, as far as vertical motions are concerned, can only with great difficulty be maintained in equilibrium.

If further the body is made to roll through a small angle, the equilibrium will be unstable unless the centre of gravity of the body is below the centre of buoyancy. This will be seen at once on reference to Fig. 27. Since the body is wholly immersed the centre of buoyancy cannot change its position on the body itself, as however it rolls the centre of buoyancy must be the centre of gravity of the displaced water, and this is not altered in form by

any movement of the body. If, therefore, G is above B and the body be given a small angular displacement to the right say, G will move to the right relative to B and the couple will not restore the body to its position of equilibrium.

On the other hand, if G is below B, the couple will act so as to bring the body to its position of equilibrium.

26. Floating docks.

Figs. 28 and 29 show a diagrammatic outline of the pontoons forming a floating dock, and in the section is shown the outline of a ship on the dock.

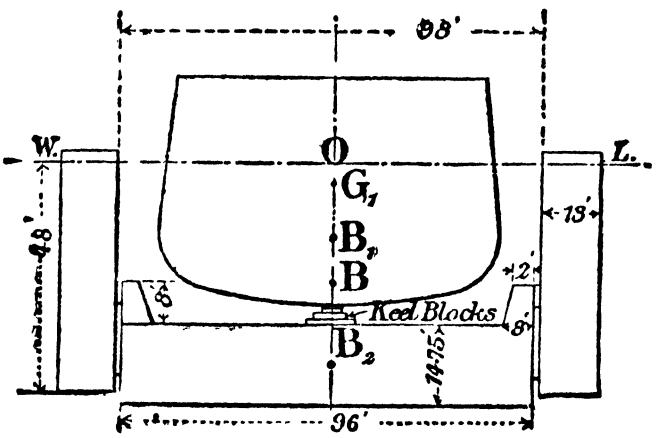

Fig. 28.

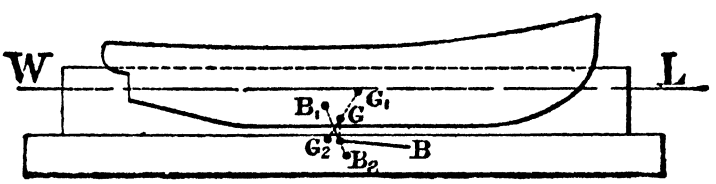

Fig. 29.

To dock a ship, the dock is sunk to a sufficient depth by admitting water into compartments formed in the pontoons, and the ship is brought into position over the centre of the dock.

Water is then pumped from the pontoon chambers, and the dock in consequence rises until the ship just rests on the keel blocks of the dock. As more water is pumped from the pontoons the dock rises with the ship, which may thus be lifted clear of the water.

Let G_1 be the centre of gravity of the ship, G_2 of the dock and its water ballast and G the centre of gravity of the dock and the ship.

The position of the centre of gravity of the dock will vary

relative to the bottom of the dock, as water is pumped from the pontoons.

As the dock is raised care must be taken that the metacentre is above G or the dock will "list."

Suppose the ship and dock are rising and that WL is the water line.

Let B_2 be the centre of buoyancy of the dock and B_1 of the portion of the ship still below the water line.

Then if V_1 and V_2 are the volume displacements below the water line of the ship and dock respectively, the centre of buoyancy B of the whole water displaced divides B_2B_1, so that

$$\frac{BB_1}{BB_2} = \frac{V_2}{V_1}.$$

The centre of gravity G of the dock and the ship divides G_1G_2 in the inverse ratios of their weights.

As the dock rises the centre of gravity G of the dock and the ship must be on the vertical through B, and water must be pumped from the pontoons so as to fulfil this condition and as nearly as possible to keep the deck of the dock horizontal.

The centre of gravity G_1 of the ship is fixed, while the centre of buoyancy of the ship B_1 changes its position as the ship is raised.

The centre of buoyancy B_2 of the dock will also be changing, but as the submerged part of the dock is symmetrical about its centre lines, B_2 will only move vertically. As stated above, B must always lie on the line joining B_1 and B_2, and as G is to be vertically above B, the centre of gravity G_2 and the weight of the pontoon must be altered by taking water from the various compartments in such a way as to fulfil this condition.

Quantity of water to be pumped from the pontoons in raising the dock. Let V be the volume displacement of the dock in its lowest position, V_0 the volume displacement in its highest position. To raise the dock without a ship in it the volume of the water to be pumped from the pontoons is $V - V_0$.

If, when the dock is in its highest position, a weight W is put on to the dock, the dock will sink, and a further volume of water $\frac{W}{w}$ cubic feet will be required to be taken from the pontoons to raise the dock again to its highest position.

To raise the dock, therefore, and the ship, a total quantity of water

$$\frac{W}{w} + V - V_0$$

cubic feet will have to be taken from the pontoons.

Example. A floating dock as shown dimensioned in Fig. 28 is made up of a bottom pontoon 540 feet long × 96 feet wide × 14·75 feet deep, two side pontoons 380 feet long × 13 feet wide × 48 feet deep, the bottom of these pontoons being 2 feet above the bottom of the dock, and two side chambers on the top of the bottom pontoon 447 feet long by 8 feet deep and 2 feet wide at the top and 8 feet at the bottom. The keel blocks may be taken as 4 feet deep.

The dock is to lift a ship of 15,400 tons displacement and 27′ 6″ draught.

Determine the amount of water that must be pumped from the dock, to raise the ship so that the deck of the lowest pontoon is in the water surface.

When the ship just takes to the keel blocks on the dock, the bottom of the dock is $27{\cdot}5' + 14{\cdot}75' + 4' = 46{\cdot}25$ feet below the water line.

The volume displacement of the dock is then

$$14{\cdot}75 \times 540 \times 96 + 2 \times 44{\cdot}25 \times 13 \times 380 + 447 \times 8 \times 5' = 1{,}219{,}700 \text{ cubic feet.}$$

The volume of dock displacement when the deck is just awash is

$$540 \times 96 \times 14{\cdot}75 + 2 \times 380 \times 13' \times (14{\cdot}75 - 2) = 890{,}600 \text{ cubic feet.}$$

The volume displacement of the ship is

$$\frac{15{,}400 \times 2240}{64} = 539{,}000 \text{ cubic feet,}$$

and this equals the weight of the ship in cubic feet of water.

Of the 890,600 cubic feet displacement when the ship is clear of the water, 351,600 cubic feet is therefore required to support the dock alone.

Simply to raise the dock through 31·5 feet the amount of water to be pumped is the difference of the displacements, and is, therefore, 329,100 cubic feet.

To raise the ship with the dock an additional 539,000 cubic feet must be extracted from the pontoons.

The total quantity, therefore, to be taken from the pontoons from the time the ship takes to the keel blocks to when the pontoon deck is in the surface of the water is

$$868{,}100 \text{ cubic feet} = 24{,}824 \text{ tons.}$$

27. Stability of the floating dock.

As some of the compartments of the dock are partially filled with water, it is necessary, in considering the stability, to take account of the tippling-moments caused by the movement of the free surface of the water in these compartments.

If G is the centre of gravity of the dock and ship on the dock, B the centre of buoyancy, I the moment of inertia of the section of the ship and dock by the water-plane about the axis of oscillation, and I_1, I_2 etc. the moments of inertia of the water surfaces in the compartments about their axes of oscillation, the righting moment when the dock receives a small angle of heel θ, is

$$wI\theta - w\,(V_1 + V_2)\,BG\theta - w\theta\,(I_1 + I_2 + \ldots).$$

The moment of inertia of the water-plane section varies considerably as the dock is raised, and the stability varies accordingly.

When the ship is immersed in the water, I is equal to the moment of inertia of the horizontal section of the ship at the water surface, together with the moment of inertia of the horizontal section of the side pontoons, about the axis of oscillation O.

When the tops of the keel blocks are just above the surface of the water, the water-plane is only that of the side pontoons, and I has its minimum value. If the dock is L-shaped as in Fig. 30, which is a very convenient form for some purposes, the stability when the tops of the keel blocks come to the surface simply depends upon the moment of inertia of the area AB about an axis through the centre of AB. This critical point can, however, be eliminated by fitting an air box, shown dotted, on the outer end of the bottom pontoon, the top of which is slightly higher than the top of the keel blocks.

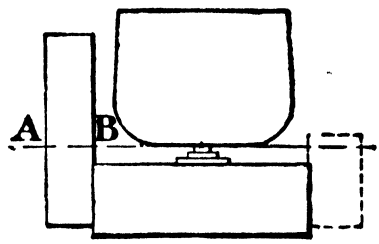

Fig. 30.

Example. To find the height of the metacentre above the centre of buoyancy of the dock of Fig. 28 when

(*a*) the ship just takes to the keel blocks,
(*b*) the keel is just clear of the water,
(*c*) the pontoon deck is just above the water.

Take the moment of inertia of the horizontal section of the ship at the water line as 9,400,000 ft.^{4} units, and assume that the ship is symmetrically placed on the dock, and that the dock deck is horizontal. The horizontal distance between the centres of the side tanks is 111 ft.

(*a*) Total moment of inertia of the horizontal section is

$$9{,}400{,}000 + 2\,(380 \times 13' \times 55{\cdot}5^2 + \tfrac{1}{12} \times 380 \times 13^3) = 9{,}400{,}000 + 30{,}430{,}000 + 139{,}000.$$

The volume of displacement

$$= 539{,}000 + 1{,}219{,}700 \text{ cubic feet}$$

The height of the metacentre above the centre of buoyancy is therefore

$$\text{BM} = \frac{39{,}969{,}000}{1{,}758{,}700} = 22{\cdot}7 \text{ feet.}$$

(*b*) When the keel is just clear of the water the moment of inertia is 30,569,000.

The volume displacement is

$$540 \times 96 \times 14{\cdot}75 + 380 \times 2 \times 13 \times (14{\cdot}75 + 4 - 2)$$
$$= 930{,}000 \text{ cubic feet.}$$

Therefore $\text{BM} = 32{\cdot}8$ feet.

(*c*) When the pontoon deck is just above the surface of the water,

$$\text{I} = 30{,}569{,}000 + \tfrac{1}{12} \times 540' \times 96^3$$
$$= 70{,}269{,}000.$$

The volume displacement is 890,600 cubic feet.

Therefore $\text{BM} = 79{\cdot}8$ feet.

The height of the centre of buoyancy above the bottom of the dock can be determined by finding the centre of buoyancy of each of the parts of the dock, and of the ship if it is in the water, and then taking moments about any axis.

For example. To find the height h of the centre of buoyancy of the dock and the ship, when the ship just comes on the keel blocks.

The centre of buoyancy for the ship is at 15 feet above the bottom of the keel.
The centre of buoyancy of the bottom pontoon is at 7·375′ from the bottom.
" " " " side pontoons " 24·125′ " "
" " " " " chambers " 17·94′ " "

Taking moments about the bottom of the dock

$$h\,(540{,}000+437{,}000+765{,}000+35{,}760)$$
$$=540{,}000\times 33{\cdot}75+765{,}000\times 7{\cdot}375$$
$$+437{,}000\times 24{\cdot}125+35{,}760\times 17{\cdot}95,$$

therefore $$h=19{\cdot}7 \text{ feet.}$$

For case (*a*) the metacentre is, therefore, 40·3′ above the bottom of the dock. If now the centre of gravity of the dock and ship is known the metacentric height can be found.

EXAMPLES.

(1) A ship when fully loaded has a total burden of 10,000 tons. Find the volume displacement in sea water.

(2) The sides of a ship are vertical near the water line and the area of the horizontal section at the water line is 22,000 sq. feet. The total weight of the ship is 10,000 tons when it leaves the river dock.

Find the difference in draught in the dock and at sea after the weight of the ship has been reduced by consumption of coal, etc., by 1500 tons.

Let ∂ be the difference in draught.

Then $\partial\times 22{,}000=$ the difference in volume displacement

$$=\frac{10{,}000\times 2240}{62{\cdot}43}-\frac{8500\times 2240}{64}$$
$$=61300 \text{ cubic feet.}$$

Therefore $\partial=2{\cdot}78$ feet.

(3) The moment of inertia of the section at the water line of a boat is 1200 foot^4 units; the weight of the boat is 11·5 tons.

Determine the height of the metacentre above the centre of buoyancy.

(4) A ship has a total displacement of 15,000 tons and a draught of 27 feet.

When the ship is lifted by a floating dock so that the depth of the bottom of the keel is 16·5 feet, the centre of buoyancy is 10 feet from the bottom of the keel and the displacement is 9000 tons.

The moment of inertia of the water-plane is 7,600,000 foot^4 units.

The horizontal section of the dock, at the plane 16·5 feet above the bottom of the keel, consists of two rectangles 380 feet × 11 feet, the distance apart of the centre lines of the rectangles being 114 feet.

The volume displacement of the dock at this level is 1,244,000 cubic feet.

The centre of buoyancy for the dock alone is 24·75 feet below the surface of the water.

Determine (*a*) The centre of buoyancy for the whole ship and the dock.

(*b*) The height of the metacentre above the centre of buoyancy.

(5) A rectangular pontoon 60 feet long is to have a displacement of 220 tons, a free-board of not less than 3 feet, and the metacentre is not to be less than 3 feet above the centre of gravity when the angle of heel is 15 degrees. The centre of gravity coincides with the centre of figure.

Find the width and depth of the pontoon.

(6) A rectangular pontoon 24 feet wide, 50 feet long and 14 feet deep, has a displacement of 180 tons.

A vertical diaphragm divides the pontoon longitudinally into two compartments each 12 feet wide and 50 feet long. In the lower part of each of these compartments there is water ballast, the surface of the water being free to move.

Determine the position of the centre of gravity of the pontoon that it may be stable for small displacements.

(7) Define "metacentric height" and show how to obtain it graphically or otherwise. A ship of 16,000 tons displacement is 600 feet long, 60 feet beam, and 26 feet draught. A coefficient of $\frac{1}{20}$ may be taken in the moment of inertia term instead of $\frac{1}{12}$ to allow for the water-line section not being a rectangle. The depth of the centre of buoyancy from the water line is 10 feet. Find the height of the metacentre above the water line and determine the position of the centre of gravity to give a metacentric height of 18 inches. [Lond. Un. 1906.]

(8) The total weight of a fully loaded ship is 5000 tons, the water line encloses an area of 9000 square feet, and the sides of the ship are vertical at the water line. The ship was loaded in fresh water. Find the change in the depth of immersion after the ship has been sufficiently long at sea to burn 500 tons of coal.

Weight of 1 cubic foot of fresh water $62\frac{1}{2}$ lbs.

Weight of 1 cubic foot of salt water 64 lbs.

CHAPTER III.

FLUIDS IN MOTION.

28. Steady motion.

The motion of a fluid is said to be steady or permanent, when the particles which succeed each other at any point whatever have the same density and velocity, and are subjected to the same pressure.

In practice it is probably very seldom that such a condition of flow is absolutely realised, as even in the case of the water flowing steadily along a pipe or channel, except at very low velocities, the velocities of succeeding particles of water which arrive at any point in the channel, are, as will be shown later, not the same either in magnitude or direction.

For practical purposes, however, it is convenient to assume that if the rate at which a fluid is passing through any finite area is constant, then at all points in the area the motion is steady.

For example, if a section of a stream be taken at right angles to the direction of flow of the stream, and the mean rate at which water flows through this section is constant, it is convenient to assume that at any point in the section, the velocity always remains constant both in magnitude and direction, although the velocity at different points may not be the same.

Mean velocity. The mean velocity through the section, or the mean velocity of the stream, is equal to the quantity of flow per unit time divided by the area of the section.

29. Stream line motion.

The particles of a fluid in motion are frequently regarded as flowing along definite paths, or in thread-like filaments, and when the motion is steady these filaments are supposed to be fixed in position. In a pipe or channel of constant section, the filaments are generally supposed to be parallel to the sides of the channel. It will be seen later that such an ideal condition of flow is only realised in very special cases, but an assumption of such flow if not abused is helpful in connection with hydraulic problems.

30. Definitions relating to flow of water.

Pressure head. The pressure head at a point in a fluid at rest has been defined as the vertical distance of the point from the free surface of the fluid, and is equal to $\frac{p}{w}$, where p is the pressure per sq. foot and w is weight per cubic foot of the fluid. Similarly, the pressure head at any point in a moving fluid at which the pressure is p lbs. per sq. foot, is $\frac{p}{w}$ feet, and if a vertical tube, called a piezometer tube, Fig. 31, be inserted in the fluid, it will rise in the tube to a height h, which equals the pressure head above the atmospheric pressure. If p is the pressure per sq. foot, above the atmospheric pressure, $h = \frac{p}{w}$, but if p is the absolute pressure per sq. foot, and p_A the atmospheric pressure,

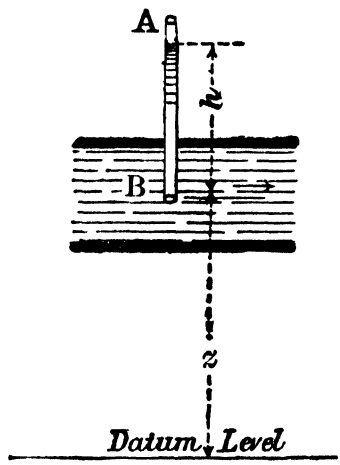

Fig. 31.

$$\frac{p}{w} = \frac{p_A}{w} + h.$$

Velocity head. If through a small area around the point B, the velocity of the fluid is v feet per second, the velocity head is $\frac{v^2}{2g}$, g being the acceleration due to gravity in feet per second per second.

Position head. If the point B is at a height z feet above any convenient datum level, the position head of the fluid at B above the given datum is said to be z feet.

31. Energy per pound of water passing any section in a stream line.

The total amount of work that can be obtained from every pound of water passing the point B, Fig. 31, assuming it can fall to the datum level and that no energy is lost, is

$$\frac{p}{w} + \frac{v^2}{2g} + z \text{ ft. lbs.}$$

Proof. Work available due to pressure head. That the work which can be done by the pressure head per pound is $\frac{p}{w}$ foot pounds can be shown as follows.

Imagine a piston fitting into the end of a small tube of cross sectional area a, in which the pressure is h feet of water as in

Fig. 32, and let a small quantity ∂Q cubic feet of water enter the tube and move the piston through a small distance ∂x.

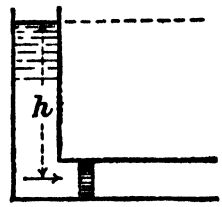

Fig. 32.

Then $$\partial Q = a \,.\, \partial x.$$

The work done on the piston as it enters will be

$$w \,.\, h \,.\, a \,.\, \partial x = w \,.\, h \partial Q.$$

But the weight of ∂Q cubic feet is $w \,.\, \partial Q$ pounds, and the work done per pound is, therefore, h, or $\frac{p}{w}$ foot pounds.

A pressure head h is therefore equivalent to h foot pounds of energy per pound of water.

Work available due to velocity. When a body falls through a height h feet, the work done on the body by gravity is h foot pounds per pound. It is shown in books on mechanics that if the body is allowed to fall freely, that is without resistance, the velocity the body acquires in feet per second is

$$v = \sqrt{2gh},$$

or

$$\frac{v^2}{2g} = h.$$

And since no resistance is offered to the motion, the whole of the work done on the body has been utilised in giving kinetic energy to it, and therefore the kinetic energy per pound is $\frac{v^2}{2g}$ ft. lbs.

In the case of the fluid moving with velocity v, an amount of energy equal to $\frac{v^2}{2g}$ foot pounds per pound is therefore available before the velocity is destroyed.

Work available due to position. If a weight of one pound falls through the height z the work done on it by gravity will be z foot pounds, and, therefore, if the fluid is at a height z feet above any datum, as for example, water at a given height above the sea level, the available energy on allowing the fluid to fall to the datum level is z foot pounds per pound.

32. Bernoulli's theorem.

In a steady moving stream of an incompressible fluid in which the particles of fluid are moving in stream lines, and there is no loss by friction or other causes

$$\frac{p}{w} + \frac{v^2}{2g} + z$$

is constant for all sections of the stream. This is a most important theorem and should be carefully studied by the reader.

It has been shown in the last paragraph that this expression represents the total amount of energy per pound of water flowing through any section of a stream, and since, between any two points in the stream no energy is lost, by the principle of the conservation of energy it can at once be inferred that this expression must be constant for all sections of a steady flowing stream. A more general proof is as follows.

Let DE, Fig. 33, be the path of a particle of the fluid.

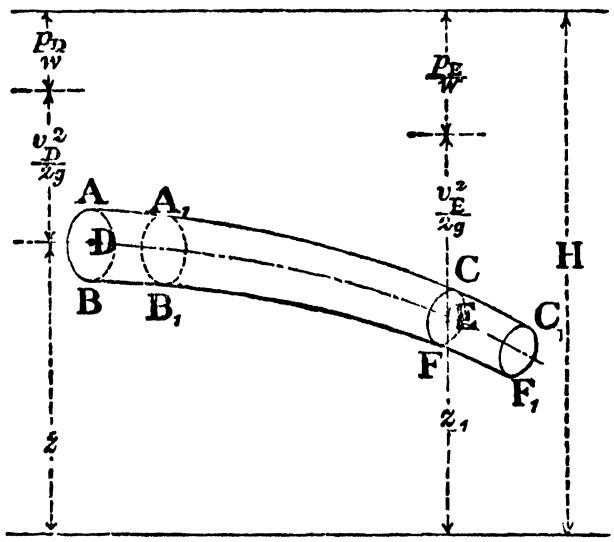

Fig. 33.

Imagine a small tube to be surrounding DE, and let the flow in this be steady, and let the sectional area of the tube be so small that the velocity through any section normal to DE is uniform.

Then the amount of fluid that flows in at D through the area AB equals the amount that flows out at E through the area CF.

Let p_D and v_D, and p_E and v_E be the pressures and velocities at D and E respectively, and A and a the corresponding areas of the tube.

Let z be the height of D above some datum and z_1 the height of E.

Then, if a quantity of fluid ABA_1B_1 equal to ∂Q enters at D, and a similar quantity CFC_1F_1 leaves at E, in a time ∂t, the velocity at D is

$$v_D = \frac{\partial Q}{A\partial t},$$

and the velocity at E is $$v_E = \frac{\partial Q}{a\partial t}.$$

The kinetic energy of the quantity of fluid ∂Q entering at D

$$= w \,.\, \partial Q \,.\, \frac{v_D^2}{2g},$$

and that of the liquid leaving at E

$$= w \,.\, \partial Q \,.\, \frac{v_E^2}{2g}.$$

Since the flow in the tube is steady, the kinetic energy of the portion ABCF does not alter, and therefore the increase of the kinetic energy of the quantity ∂Q

$$= \frac{w \,.\, \partial Q}{2g} \,.\, (v_E^2 - v_D^2).$$

The work done by gravity is the same as if ABB_1A_1 fell to CFF_1C_1 and therefore equals

$$w \,.\, \partial Q\,(z - z_1).$$

The total pressure on the area AB is $p_D \,.\, A$, and the work done at D in time ∂t

$$= p_D A v_D \,\partial t = p_D \,\partial Q,$$

and the work done by the pressure at E in time δt

$$= - p_E \, a v_E \,\partial t = - p_E \,\partial Q.$$

But the gain of kinetic energy must equal the work done, and therefore

$$\frac{w \partial Q}{2g} \,.\, (v_E^2 - v_D^2) = w \partial Q\,(z - z_1) + p_D \,\partial Q - p_E \,\partial Q.$$

From which

$$\frac{v_E^2}{2g} - \frac{v_D^2}{2g} = z - z_1 + \frac{p_D}{w} - \frac{p_E}{w},$$

or

$$\frac{v_E^2}{2g} + \frac{p_E}{w} + z_1 = \frac{v_D^2}{2g} + \frac{p_D}{w} + z = \text{constant}.$$

From this theorem it is seen that, if at points in a steady moving stream, a vertical ordinate equal to the velocity head plus the pressure head is erected, the upper extremities of these ordinates will be in the same horizontal plane, at a height H equal to $\frac{p}{w} + \frac{v^2}{2g} + z$ above the datum level.

Mr Froude* has given some very beautiful experimental illustrations of this theorem.

In Fig. 34 water is taken from a tank or reservoir in which the water is maintained at a constant level by an inflowing stream, through a pipe of variable diameter fitted with tubes at various points. Since the pipe is short it may be supposed to be frictionless. If the end of the pipe is closed the water will rise in all the tubes to the same level as the water in the reservoir, but if the end C is opened, water will flow through the pipe and the water surfaces in the tubes will be found to be at different levels.

* British Assoc. Report 1875.

The quantity of water flowing per second through the pipe can be measured, and the velocities at A, B, and C can be found by dividing this quantity by the cross-sectional areas of the pipe at these points.

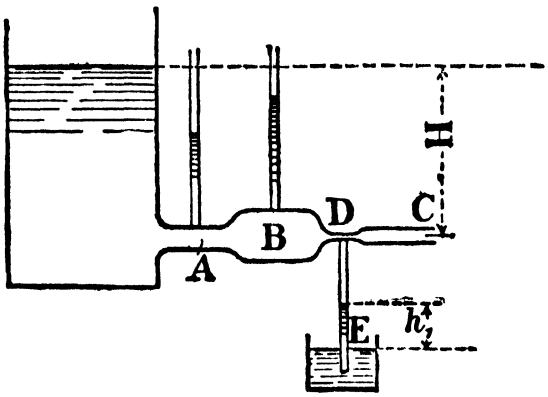

Fig. 34.

If to the head of water in the tubes at A and B the ordinates $\frac{v_A^2}{2g}$ and $\frac{v_B^2}{2g}$ be added respectively, the upper extremities of these ordinates will be practically on the same level and nearly level with the surface of the water in the reservoir, the small difference being due to frictional and other losses of energy.

At C the pressure is equal to the atmospheric pressure, and neglecting friction in the pipe, the whole of the work done by gravity on any water leaving the pipe while it falls from the surface of the water in the reservoir through the height H, which is H ft. lbs. per pound, is utilised in giving velocity of motion to the water, and, as will be seen later, in setting up internal motions.

Neglecting these resistances,

$$\frac{v_C^2}{2g} = H.$$

Due to the neglected losses, the actual velocity measured will be less than v_C as calculated from this equation.

If at any point D in the pipe, the sectional area is less than the area at C, the velocity will be greater than v_C, and the pressure will be less than the atmospheric pressure.

If v is the velocity at any section of the pipe, which is supposed to be horizontal, the absolute pressure head at that section is

$$\frac{p}{w} = \frac{p_a}{w} + H - \frac{v^2}{2g} = \frac{p_a}{w} + \frac{v_C^2}{2g} - \frac{v^2}{2g},$$

p_a being the atmospheric pressure at the surface of the water in the reservoir.

than p_a. If coloured water be put into the vessel E, it will rise in the tube DE to a height

$$h_1 = \frac{p_a}{w} - \frac{p_D}{w} = \frac{v_D^2}{2g} - \frac{v_C^2}{2g}.$$

If the area at the section is so small, that p becomes negative, the fluid will be in tension, and discontinuity of flow will take place.

If the fluid is water which has been exposed to the atmosphere and which consequently contains gases in solution, these gases will escape from the water if the pressure becomes less than the tension of the dissolved gases, and there will be discontinuity even before the pressure becomes zero.

Figs. 35 and 36 show two of Froude's illustrations of the theorem.

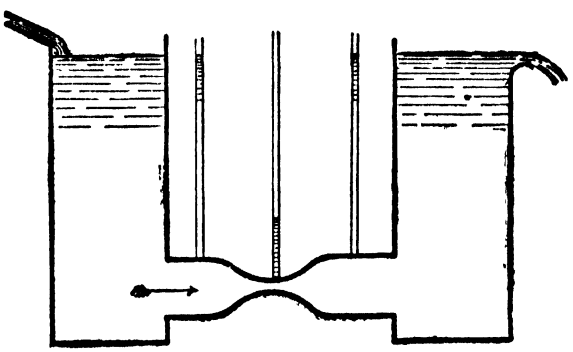

Fig. 35.

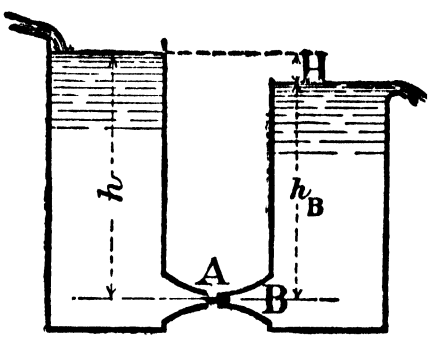

Fig. 36.

At the section B, Fig. 36, the pressure head is h_B and the velocity head is

$$\frac{v_B^2}{2g} = h - h_B = H.$$

If a is the section of the pipe at A, and a_1 at B, since there is continuity of flow,

$$v_A \cdot a = v_B \cdot a_1,$$

and

$$\frac{v_A^2}{2g} + h_A = \frac{v_B^2}{2g} + h_B = h.$$

If now a is made so that

$$\frac{v_A^2}{2g} = h,$$

the pressure head h_A becomes equal to the atmospheric pressure, and the pipe can be divided at A, as shown in the figure.

Professor Osborne Reynolds devised an interesting experiment, to show that when the velocity is high, the pressure is small.

He allowed water to flow through a tube $\frac{3}{4}$ inch diameter under a high pressure, the tube being diminished at one section to 0·05 inch diameter.

At this diminished section, the velocity was very high and the pressure fell so low that the water boiled and made a hissing noise.

33. Venturi meter.

An application of Bernoulli's theorem is found in the Venturi meter, as invented by Mr Clemens Herschel*. The meter takes its name from an Italian philosopher who in the last decade of the 18th century made experiments upon the flow of water through conical pipes. In its usual form the Venturi meter consists of two truncated conical pipes connected together by a short cylindrical pipe called the throat, as shown in Figs. 37 and 38. The meter is inserted horizontally in a line of piping, the diameter of the large ends of the frustra being equal to that of the pipe.

Piezometer tubes or other pressure gauges are connected to the throat and to one or both of the large ends of the cones.

Let a be the area of the throat.

Let a_1 be the area of the pipe or the large end of the cone at A.

Let a_2 be the area of the pipe or the large end of the cone at C.

Let p be the pressure head at the throat.

Let p_1 be the pressure head at the up-stream gauge A.

Let p_2 be the pressure head at the down-stream gauge C.

Let H and H_1 be the differences of pressure head at the throat and large ends A and C of the cone respectively, or

$$H = \frac{p_1}{w} - \frac{p}{w},$$

and

$$H_1 = \frac{p_2}{w} - \frac{p}{w}.$$

Let Q be the flow through the meter in cubic feet per sec.

Let v be the velocity through the throat.

Let v_1 be the velocity at the up-stream large end of cone A.

Let v_2 be the velocity at the down-stream large end of cone C.

Then, assuming Bernouilli's theorem, and neglecting friction,

$$\frac{p}{w} + \frac{v^2}{2g} = \frac{p_1}{w} + \frac{v_1^2}{2g} = \frac{p_2}{w} + \frac{v_2^2}{2g},$$

and

$$H = \frac{v^2 - v_1^2}{2g}.$$

If v_2 is equal to v_1, p_2 is theoretically equal to p_1, but there is always in practice a slight loss of head in the meter, the difference $\frac{p_1 - p_2}{w}$ being equal to this loss of head.

* *Transactions Am.S.C.E.*, 1887.

The velocity v is $\frac{Q}{a}$, and v_1 is $\frac{Q}{a_1}$.

Therefore $$Q^2\left(\frac{1}{a^2}-\frac{1}{a_1^2}\right)=2g\,.\,H,$$

and $$Q=\frac{aa_1}{\sqrt{a_1^2-a^2}}\sqrt{2g\,.\,H}.$$

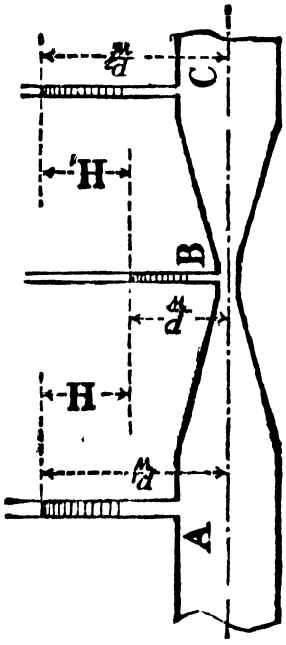

Fig. 37.

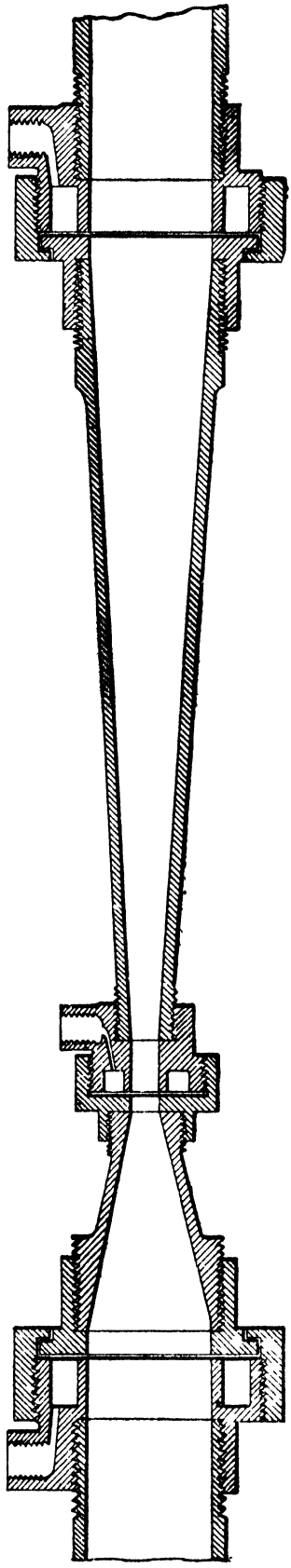

Fig. 38. Coker's Venturi Meter.

Due to friction, and eddy motions that may be set up in the meter, the discharge is slightly less than this theoretical value, or

$$Q = k \cdot \frac{aa_1}{\sqrt{a_1^2 - a^2}} \sqrt{2gH}, \ldots\ldots\ldots\ldots\ldots\ldots (1)$$

*k being a coefficient which has to be determined by experiment. For meters having a throat diameter not less than 2 inches and for pipe line velocities not less than 1 foot per second a value of 0·985 for k will probably give discharges within an error of from 2 to 2·5 per cent. For smaller meters and lower velocities the error may be considerable and special calibrations are desirable.

For a meter having a diameter of 25·5 inches at the throat and 54 inches at the large end of the cone, Herschel found the following values for k, given in Table III, so that the coefficient varies but little for a large variation of H.

TABLE III.

Herschel		Coker	
H feet	k	Discharge in cu. ft.	k
1	·995	·0418	·9494
2	·992	·0319	·9587
6	·985	·0254	·9572
12	·9785	·0185	·9920
18	·977	·0096	1·2021
23	·970	·0084	1·3583

Professor Coker†, from careful experiments on an exceedingly well designed small Venturi meter, Fig. 38, the area of the throat of which was ·014411 sq. feet, found that for small flows the coefficient was very variable as shown in Table III.

These results show, as pointed out by Professor Coker from an analysis of his own and Herschel's experiments on meters of various sizes, that in large Venturi meters, the discharge is very approximately proportional to the square root of the head, but for small meters it only follows this law for high heads.

Example. A Venturi meter having a diameter at the throat of 36 inches is inserted in a 9 foot diameter pipe.

The pressure head at the throat gauge is 20 feet of water and at the pipe gauge is 26 feet.

* See paper by Gibson, *Proc. Inst. C.E.* Vol. cxcix.

† Canadian Society of Civil Engineers, 1902.

Find the discharge, and the velocity of flow through the throat.
The area of the pipe is 63·5 sq. feet.
,, ,, throat 7·05 ,,
The difference in pressure head at the two gauges is 6 feet.

Therefore
$$Q = \frac{63{\cdot}5 \times 7{\cdot}05}{\sqrt{63{\cdot}5^2 - 7{\cdot}05^2}} \sqrt{2 \times 32{\cdot}2 \times 6}$$
$$= \tfrac{440}{63} \sqrt{386}$$
$$= 137 \text{ c. ft. per second.}$$

The velocity of flow in the pipe is 2·15 ft. per sec.
,, ,, through the throat is 19·4 ft. per sec.

34. Steering of canal boats.

An interesting application of Bernoulli's theorem is to show the effect of speed and position on the steering of a canal boat.

When a boat is moved at a high velocity along a narrow and shallow canal, the boat tends to leave behind it a hollow which is filled by the water rushing past the boat as shown in Figs. 39 and 40, while immediately in front of the boat the impact of the bow on the still water causes an increase in the pressure and the water is "piled up" or is at a higher level than the still water, and what is called a bow wave is formed.

Fig. 39.

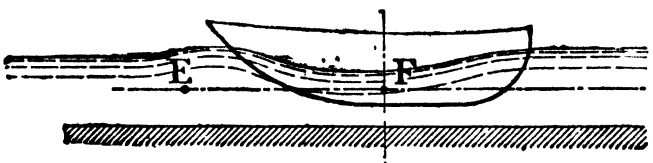

Fig. 41.

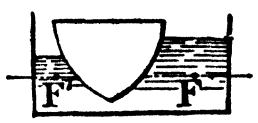

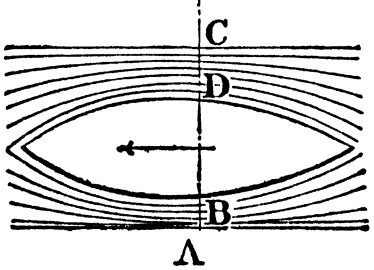

Fig. 40.

Let it be assumed that the water moves past the boat in stream lines.

If vertical sections are taken at E and F, and the points E and F are on the same horizontal line, by Bernoulli's theorem

$$\frac{p_E}{w} + \frac{v_E^2}{2g} = \frac{p_F}{u} + \frac{v_F^2}{2g}.$$

At E the water is practically at rest, and therefore v_E is zero, and

$$\frac{p_E}{w} = \frac{p_F}{w} + \frac{v_F^2}{2g}.$$

The surface at E will therefore be higher than at F.

When the boat is at the centre of the canal the stream lines on both sides of the boat will have the same velocity, but if the boat is nearer to one bank than the other, as shown in the figures, the velocity $v_{F'}$ of the stream lines between the boat and the nearer bank, Fig. 41, will be higher than the velocity v_F on the other side. But for each side of the boat

$$\frac{p_E}{w} = \frac{p_F}{w} + \frac{v_F^2}{2g} = \frac{p_{F'}}{w} + \frac{v_{F'}^2}{2g}.$$

And since $v_{F'}$ is greater than v_F, the pressure head p_F is greater than $p_{F'}$, or in other words the surface of the water at the right side D of the boat will be higher than on the left side B.

The greater pressure on the right side D tends to push the boat towards the left bank A, and at high speeds considerably increases the difficulty of steering.

This difficulty is diminished if the canal is made sufficiently deep, so that flow can readily take place underneath the boat.

35. Extension of Bernoulli's theorem.

In deducing this theorem it has been assumed that the fluid is a perfect fluid moving with steady motion and that there are no losses of energy, by friction of the surfaces with which the fluid may be in contact, or by the relative motion of consecutive elements of the fluid, or due to internal motions of the fluid.

In actual cases the value of

$$\frac{p}{w} + \frac{v^2}{2g} + z$$

diminishes as the motion proceeds.

If h_f is the loss of head, or loss of energy per pound of fluid, between any two given points A and B in the stream, then more generally

$$\frac{p_A}{w} + \frac{v_A^2}{2g} + z_A = \frac{p_B}{w} + \frac{v_B^2}{2g} + z_B + h_f \quad \text{.....(1).}$$

EXAMPLES.

(1) The diameter of the throat of a Venturi meter is $\frac{3}{8}$ inch, and of the pipe to which it is connected $1\frac{5}{8}$ inches. The discharge through the meter in 20 minutes was found to be 314 gallons.

The difference in pressure head at the two gauges was 49 feet. Determine the coefficient of discharge.

(2) A Venturi meter has a diameter of 4 ft. in the large part and 1·25 ft. in the throat. With water flowing through it, the pressure head is 100 ft. in the large part and 97 ft. at the throat. Find the velocity in the small part and the discharge through the meter. Coefficient of meter taken as unity.

(3) A pipe AB, 100 ft. long, has an inclination of 1 in 5. The head due to the pressure at A is 45 ft., the velocity is 3 ft. per second, and the section of the pipe is 3 sq. ft. Find the head due to the pressure at B, where the section is $1\frac{1}{2}$ sq. ft. Take A as the lower end of the pipe.

(4) The suction pipe of a pump is laid at an inclination of 1 in 5, and water is pumped through it at 6 ft. per second. Suppose the air in the water is disengaged if the pressure falls to more than 10 lbs. below atmospheric pressure. Then deduce the greatest practicable length of suction pipe. Friction neglected.

(5) Water is delivered to an inward-flow turbine under a head of 100 feet (see Chapter IX). The pressure just outside the wheel is 25 lbs. per sq. inch by gauge.

Find the velocity with which the water approaches the wheel. Friction neglected.

(6) A short conical pipe varying in diameter from 4′ 6″ at the large end to 2 feet at the small end forms part of a horizontal water main. The pressure head at the large end is found to be 100 feet, and at the small end 96·5 feet.

Find the discharge through the pipe. Coefficient of discharge unity.

(7) Three cubic feet of water per second flow along a pipe which as it falls varies in diameter from 6 inches to 12 inches. In 50 feet the pipe falls 12 feet. Due to various causes there is a loss of head of 4 feet.

Find (*a*) the loss of energy in foot pounds per minute, and in horse-power, and the difference in pressure head at the two points 50 feet apart. (Use equation 1, section 35.)

(8) A horizontal pipe in which the sections vary gradually has sections of 10 square feet, 1 square foot, and 10 square feet at sections A, B, and C. The pressure head at A is 100 feet, and the velocity 3 feet per second. Find the pressure head and velocity at B.

Given that in another case the difference of the pressure heads at A and B is 2 feet. Find the velocity at A.

(9) A Venturi meter in a water main consists of a pipe converging to the throat and enlarging again gradually. The section of main is 9 sq. ft. and the area of throat 1 sq. ft. The difference of pressure in the main and at the throat is 12 feet of water. Find the discharge of the main per hour.

(10) If the inlet area of a Venturi meter is n times the throat area, and v and p are the velocity and pressure at the throat, and the inlet pressure is mp, show that—

$$(m-1)\frac{p}{w}=\left(1-\frac{1}{n^2}\right)\frac{v^2}{2g}$$

and show that if p and mp are observed, v can be found.

(11) Two sections of a pipe have an area of 2 sq. ft. and 1 sq. ft. respectively. The centre of the first section is 10 feet higher than that of the second. The pressure head at each of the sections is 20 feet. Find the energy lost per pound of flow between the two sections, when 10 c. ft. of water per sec. flow from the higher to the lower section.

CHAPTER IV.

FLOW OF WATER THROUGH ORIFICES AND OVER WEIRS.

36. Flow of fluids through orifices.

The general theory of the discharge of fluids through orifices, as for example the flow of steam and air, presents considerable difficulties, and is somewhat outside the scope of this treatise. Attention is, therefore, confined to the problem of determining the quantity of water which flows through a given orifice in a given time, and some of the phenomena connected therewith.

In what follows, it is assumed that the density of the fluid is constant, the effect of small changes of temperature and pressure in altering the density being thus neglected.

Consider a vessel, Fig. 42, filled with water, the free surface of which is maintained at a constant level; in the lower part of the vessel there is an orifice AB.

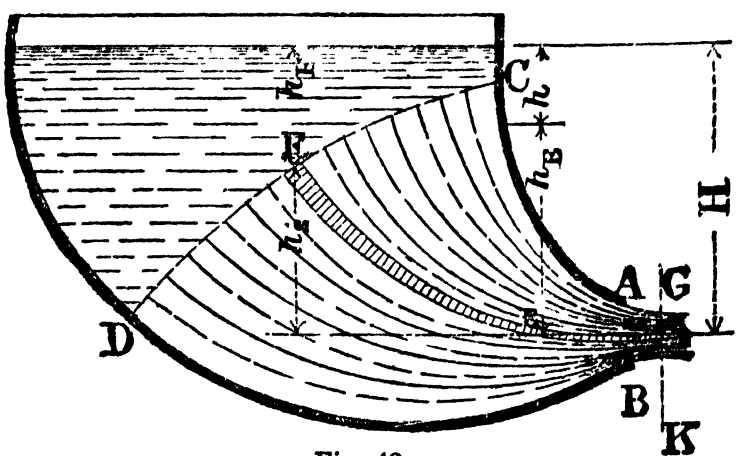

Fig. 42.

Let it be assumed that although water flows into the vessel so as to maintain a constant head, the vessel is so large that at some surface CD, the velocity of flow is zero.

Imagine the water in the vessel to be divided into a number of stream lines, and consider any stream line EF.

Let the velocities at E and F be v_E and v_F, the pressure heads h_E and h_F, and the position heads above some datum, z_E and z_F, respectively.

Then, applying Bernoulli's theorem to the stream line EF,

$$h_E + \frac{v_E^2}{2g} + z_E = h_F + \frac{v_F^2}{2g} + z_F.$$

If v_F is zero, then

$$\frac{v_E^2}{2g} = h_F - h_E + z_F - z_E.$$

But from the figure it is seen that

$$h_F - h_E + z_F - z_E$$

is equal to h, and therefore

$$\frac{v_E^2}{2g} = h,$$

or

$$v_E = \sqrt{2gh}.$$

Since h_E is the pressure head at E, the water would rise in a tube having its end open at E, a height h_E, and h may thus be called—following Thomson—the fall of "free level for the point E."

At some section GK near to the orifice the stream lines are all practically normal to the section, and the pressure head will be equal to the atmospheric pressure; and if the orifice is small the fall of free level for all the stream lines is H, the distance of the centre of the section GK below the free surface of the water. If the orifice is circular and sharp-edged, as in Figs. 44 and 45, the section GK is at a distance, from the plane of the orifice, about equal to its radius. For small vertical orifices, and horizontal orifices, H may be taken as equal to the distance of the centre of the orifice below the free surface.

The theoretical velocity of flow through the small section GK is, therefore, the same for all the stream lines, and equal to the velocity which a body will acquire, in falling, in a vacuum, through a height, equal to the depth of the centre of the orifice below the free surface of the water in the vessel.

The above is Thomson's proof of Torricelli's theorem, which was discovered experimentally, by him, about the middle of the 17th century.

The theorem is proved experimentally as follows.

If the aperture is turned upwards, as in Fig. 43, it is found that the water rises nearly to the level of the water in the vessel, and it is inferred, that if the resistance of the air and of the orifice could be eliminated, the jet would rise exactly to the level of the surface of the water in the vessel.

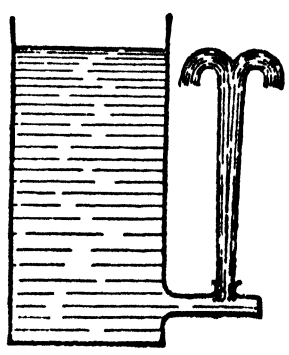

Fig. 43.

Other experiments described on pages 54—56, also show that, with carefully constructed orifices, the mean velocity through the orifice differs from $\sqrt{2gH}$ by a very small quantity.

37. Coefficient of contraction for sharp-edged orifice.

If an orifice is cut in the flat side, or in the bottom of a vessel, and has a sharp edge, as shown in Figs. 44 and 45, the stream lines set up in the water approach the orifice in all directions, as shown in the figure, and the directions of flow of the particles of water, except very near the centre, are not normal to the plane of the orifice, but they converge, producing a contraction of the jet.

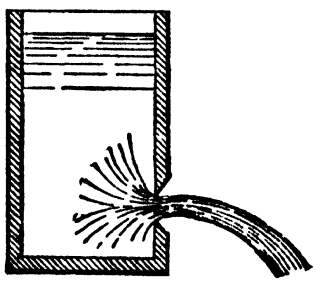

Fig. 44.

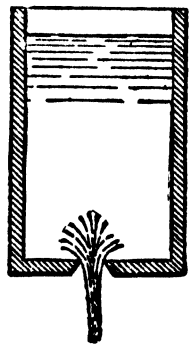

Fig. 45.

At a small distance from the orifice the stream lines become practically parallel, but the cross sectional area of the jet is considerably less than the area of the orifice.

If ω is the area of the jet at this section and a the area of the orifice the ratio $\frac{\omega}{a}$ is called the coefficient of contraction and may be denoted by c. Weisbach states, that for a circular orifice, the jet has a minimum area at a distance from the orifice slightly less than the radius of the orifice, and defines the coefficient of contraction as this area divided by the area of the orifice. For a circular orifice he gives to c the value 0·64. Recent careful measurements of the sections of jets from horizontal and vertical sharp-edged circular and rectangular orifices, by Bazin, the results of some of which are shown in Table IV, show, however, that the section of the jet diminishes continuously and in fact has no minimum value. Whether a minimum occurs for square orifices is doubtful.

The diminution in section for a greater distance than that given by Weisbach is to be expected, for, as the jet moves away from the orifice the centre of the jet falls, and the theoretical velocity becomes $\sqrt{2g(H+y)}$, y being the vertical distance between the centre of the orifice and the centre of the jet.

At a small distance away from the orifice, however, the stream lines are practically parallel, and very little error is introduced in the coefficient of contraction by measuring the stream near the orifice.

Poncelet and Lesbros in 1828 found, for an orifice ·20 m. square, a minimum section of the jet at a distance of ·3 m. from the orifice and at this section c was ·563. M. Bazin, in discussing these results, remarks that at distances greater than 0·3 m. the section becomes very difficult to measure, and although the vein appears to expand, the sides become hollow, and it is uncertain whether the area is really diminished.

Complete contraction. The maximum contraction of the jet takes place when the orifice is sharp edged and is well removed from the sides and bottom of the vessel. In this case the contraction is said to be complete. Experiments show, that for complete contraction the distance from the orifice to the sides or bottom of the vessel should not be less than one and a half to twice the least diameter of the orifice.

Incomplete or suppressed contraction. An example of incomplete contraction is shown in Fig. 46, the lower edge of the rectangular orifice being made level with the bottom of the vessel. The same effect is produced by placing a horizontal plate in the vessel level with the bottom of the orifice. The stream lines at the lower part of the orifice are normal to its plane and the contraction at the lower edge is consequently suppressed.

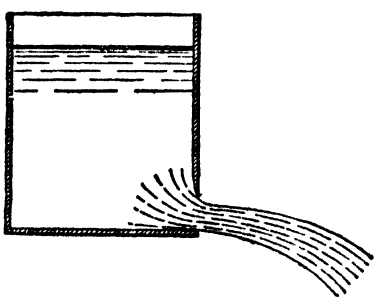

Fig. 46.

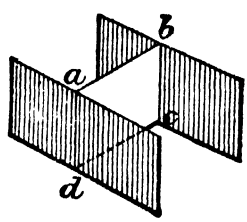

Fig. 47.

Similarly, if the width of a rectangular orifice is made equal to that of the vessel, or the orifice *abcd* is provided with side walls as in Fig. 47, the side or lateral contraction is suppressed. In any case of suppressed contraction the discharge is increased, but, as will be seen later, the discharge coefficient may vary more than when the contraction is complete. To suppress the contraction completely, the orifice must be made of such a form that the stream lines become parallel at the orifice and normal to its plane.

Experimental determination of c. The section of the stream from a circular orifice can be obtained with considerable accuracy by the apparatus shown in Fig. 49, which consists of a ring having four radial set screws of fine pitch. The screws are adjusted until the points thereof touch the jet. M. Bazin has recently used an octagonal frame with twenty-four set screws, all radiating to a common centre, to determine the form of the section of jets from various kinds of orifices.

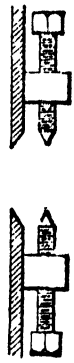

Fig. 48.

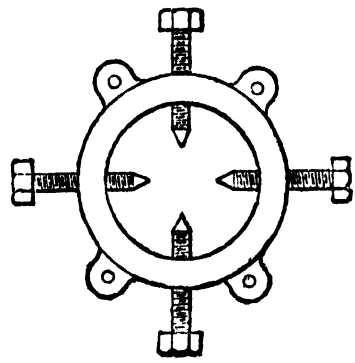

Fig. 49.

The screws were adjusted until they just touched the jet. The frame was then placed upon a sheet of paper and the positions of the ends of the screws marked upon the paper. The forms of the sections could then be obtained, and the areas measured with considerable accuracy. Some of the results obtained are shown in Table IV and also in the section on the form of the liquid vein.

38. Coefficient of velocity for sharp-edged orifice.

The theoretical velocity through the contracted section is, as shown in section 36, equal to $\sqrt{2gH}$, but the actual velocity v_1 is slightly less than this due to friction at the orifice. The ratio $\frac{v_1}{v} = k$ is called the coefficient of velocity.

Experimental determination of k. There are two methods adopted for determining k experimentally.

First method. The velocity is determined by measuring the discharge in a given time under a given head, and the cross sectional area ω of the jet, as explained in the last paragraph, is also obtained. Then, if v_1 is the actual velocity, and Q the discharge per second,

$$v_1 = \frac{Q}{\omega}$$

and

$$k = \frac{Q}{\omega\sqrt{2gH}}.$$

Second method. An orifice, Fig. 50, is formed in the side of a vessel and water allowed to flow from it. The water after leaving the orifice flows in a parabolic curve. Above the orifice is fixed a horizontal scale on which is a slider carrying a vertical scale, to the bottom of which is clamped a bent piece of wire, with a sharp

point. The vertical scale can be adjusted so that the point touches the upper or lower surface of the jet, and the horizontal and vertical distances of any point in the axis of the jet from the centre of the orifice can thus be obtained.

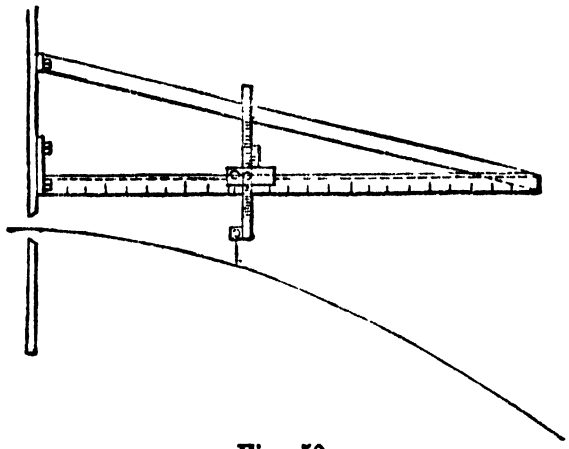

Fig. 50.

Assume the orifice is vertical, and let v_1 be the horizontal velocity of flow. At a time t seconds after a particle has passed the orifice, the distance it has moved horizontally is

$$x = v_1 t \quad \text{.....(1).}$$

The vertical distance is

$$y = \tfrac{1}{2}gt^2 \quad \text{.....(2).}$$

Therefore $$y = \tfrac{1}{2}g\,\frac{x^2}{v_1^2}$$

and $$v_1 = x\sqrt{\frac{g}{2y}}.$$

The theoretical velocity of flow is

$$v = \sqrt{2gH}.$$

Therefore $$k = \frac{v_1}{\sqrt{2gH}} = \frac{x}{2\sqrt{yH}}.$$

It is better to take two values of x and y so as to make allowance for the plane of the orifice not being exactly perpendicular.

If the orifice has its plane inclined at an angle θ to the vertical, the horizontal component of the velocity is $v_1 \cos\theta$ and the vertical component $v_1 \sin\theta$.

At a time t seconds after a particle has passed the orifice, the horizontal movement from the orifice is,

$$x = v_1 \cos\theta t \quad \text{.....(1),}$$

and the vertical movement is,

$$y = v_1 \sin\theta t + \tfrac{1}{2}gt^2 \quad \text{.....(2).}$$

After a time t_1 seconds $$x_1 = v_1 \cos\theta t_1 \quad \text{.....(3),}$$

$$y_1 = v_1 \sin\theta t_1 + \tfrac{1}{2}gt_1^2 \quad \text{.....(4).}$$

Substituting the value of t from (1) in (2) and t_1 from (3) in (4),

$$y = x \tan\theta + \frac{g \cdot x^2}{2v_1^2 \cos^2\theta} \quad \text{.....(5)},$$

and,

$$y_1 = x_1 \tan\theta + \frac{g \cdot x_1^2}{2v_1^2 \cos^2\theta} \quad \text{.....(6)}.$$

From (5),

$$\frac{2v_1^2}{g} = \frac{x^2 \sec^2\theta}{y - x\tan\theta} \quad \text{.....(7)}.$$

Substituting for v_1^2 in (6),

$$\tan\theta = \frac{y_1 x^2 - y x_1^2}{x x_1 (x - x_1)} \quad \text{.....(8)}.$$

Having calculated $\tan\theta$, $\sec\theta$ can be found from mathematical tables, and from (7) v_1 can be calculated. Then

$$k = \frac{v_1}{\sqrt{2gH}}.$$

39. Bazin's experiments on a sharp-edged orifice.

In Table IV are given values of k as obtained by Bazin from experiments on vertical and horizontal sharp-edged orifices, for various values of the head.

The section of the jet at various distances from the orifice was carefully measured by the apparatus described above, and the actual discharge per second was determined by noting the time taken to fill a vessel of known capacity.

The mean velocity through any section was then

$$v_m = \frac{Q}{A},$$

Q being the discharge per second and A the area of the section.

The fall of free level for the various sections was different, and allowance is made for this in calculating the coefficient k in the fourth column.

Let y be the vertical distance of the centre of any section below the centre of the orifice; then the fall of free level for that section is $H + y$ and the theoretical velocity is

$$\sqrt{2g(H + y)}.$$

The coefficients given in column 3 were determined by dividing the actual mean velocity through different sections of the jet by $\sqrt{2gH}$, the theoretical velocity at the centre of the orifice.

Those in column 4 were found by dividing the actual mean velocity through the section by $\sqrt{2g(H + y)}$, the theoretical velocity at any section of the jet.

The coefficient of column 3 increases as the section is taken further from the jet, and in nearly all cases is greater than unity.

TABLE IV.

Sharp-edged Orifices Contraction Complete.

Table showing the ratio of the area of the jet to the area of the orifice at definite distances from the orifice, and the ratio of the mean velocity in the section to $\sqrt{2gH}$ and to $\sqrt{2g.(H+y)}$, H being the head at the centre of the orifice and y the vertical distance of the centre of the section of the jet from the centre of the orifice.

Vertical circular orifice 0·20 m. (·656 feet) diameter, H = ·990 m. (3·248 feet).

Coefficient of discharge m, by actual measurement of the flow is

$m = ·5977$*.

Distance of the section from the plane of the orifice in metres	Area of Jet / Area of Orifice $= c$	Mean Velocity / $\sqrt{2gH}$ $= k$	Mean Velocity / $\sqrt{2g(H+y)}$ $= k$
0·08	·6079	0·983	
0·13	·5971	1·001	·998
0·17	·5951	1·004	·999
0·235	·5904	1·012	1·003
0·335	·5830	1·025	1·007
0·515	·5690	1·050	1·010

Horizontal circular orifice 0·20 m. (·656 feet) diameter, H = ·975 m. (3·198 feet).

$m = 0·6035$.

0·075	0·6003	1·005	0·968
0·093	0·5939	1·016	0·971
0·110	0·5824	1·036	0·982
0·128	0·5734	1·053	0·990
0·145	0·5658	1·067	0·996
0·163	0·5597	1·078	0·998

Vertical orifice ·20 m. (·656 feet) square, H = ·953 m. (3·126 feet).

$m = 0·6066$.

0·151	0·6052	1·002	·997
0·175	0·6029	1·006	1·000
0·210	0·5970	1·016	1·007
0·248	0·5930	1·023	1·010
0·302	0·5798	1·046	1·027
0·350	0·5783	1·049	1·024

The real value of the coefficient for the various sections is however that given in column 4.

For the horizontal orifice, for every section, it is less than unity, but for the vertical orifice it is greater than unity.

Bazin's results confirm those of Lesbros and Poncelet, who in

* See section 42 and Appendix 1.

1828 found that the actual velocity through the contracted section of the jet, even when account was taken of the centre of the section of the jet being below the centre of the orifice, was $\frac{1}{25}$ greater than the theoretical value.

This result appears at first to contradict the principle of the conservation of energy, and Bernoulli's theorem.

It should however be noted that the vertical dimensions of the orifice are not small compared with the head, and the explanation of the apparent anomaly is no doubt principally to be found in the fact that the initial velocities in the different horizontal filaments of the jet are different.

Theoretically the velocity in the lower part of the jet is greater than $\sqrt{2g\,(H+y)}$, and in the upper part less than $\sqrt{2g\,(H+y)}$.

Suppose for instance a section of a jet, the centre of which is 1 metre below the free surface, and assume that all the filaments have a velocity corresponding to the depth below the free surface, and normal to the section. This is equivalent to assuming that the pressure in the section of the jet is constant, which is probably not true.

Let the jet be issuing from a square orifice of ·2 m. (·656 feet) side, and assume the coefficient of contraction is ·6, and for simplicity that the section of the jet is square.

Then the side of the jet is ·1549 metres.

The theoretical velocity at the centre is $\sqrt{2g}$, and the discharge assuming this velocity for the whole section is

$$\cdot 6 \times \cdot 04 \times \sqrt{2g} = \cdot 024\ \sqrt{2g} \text{ cubic metres.}$$

The actual discharge, on the above assumption, through any horizontal filament of thickness dh, and depth h, is

$$\partial Q = 0\cdot 1549 \times dh \times \sqrt{2gh},$$

and the total discharge is

$$Q = 0\cdot 1549\ \sqrt{2g} \int_{9225}^{1\ 0775} h^{\frac{1}{2}} dh$$

$$= \cdot 0241\ \sqrt{2g}.$$

The theoretical discharge, taking account of the varying heads is, therefore, 1·004 times the discharge calculated on the assumption that the head is constant.

As the head is increased this difference diminishes, and when the head is greater than 5 times the depth of the orifice, is very small indeed.

The assumed data agrees very approximately with that given in Table IV for a square orifice, where the value of k is given as 1·006.

This partly then, explains the anomalous values of k, but it cannot be looked upon as a complete explanation.

The conditions in the actual jet are not exactly those assumed, and the variation of velocity normal to the plane of the section is probably much more complicated than here assumed.

As Bazin further points out, it is probable that, in jets like those from the square orifice, which, as will be seen later when the form of the jet is considered, are subject to considerable deformation, the divergence of some of the filaments gives rise to pressures less than that of the atmosphere.

Bazin has attempted to demonstrate this experimentally, and his instrument, Fig. 150, registered pressures less than that of the atmosphere; but he doubts the reliability of the results, and points out the extreme difficulty of satisfactorily determining the pressure in the jet.

That the inequality of the velocity of the filaments is the primary cause, receives support from the fact that for the horizontal orifice, discharging downwards, the coefficient k is always slightly less than unity. In this case, in any horizontal section below the orifice, the head is the same for all the stream lines, and the velocity of the filaments is practically constant. The coefficient of velocity is never less than ·96, so that the loss due to the internal friction of the liquid is very small.

40. Distribution of velocity in the plane of the orifice.

Bazin has examined the distribution of the velocity in the various sections of the jet by means of a fine Pitot tube (see page 245). In the plane of the orifice a minimum velocity occurs, which for vertical orifices is just above the centre, but at a little distance from the orifice the minimum velocity is at the top of the jet.

For orifices having complete contraction Bazin found the minimum velocity to be ·62 to ·64 $\sqrt{2gH}$, and for the rectangular orifice, with lateral contraction suppressed, 0·69 $\sqrt{2gH}$.

As the distance from the plane of the orifice increases, the velocities in the transverse section of the jets from horizontal orifices, rapidly become uniform throughout the transverse section.

For vertical orifices, the velocities below the centre of the jet are greater than those in the upper part.

41. Pressure in the plane of the orifice.

M. Lagerjelm stated in 1826 that if a vertical tube open at both ends was placed with its lower end near the centre, and not perceptibly below the plane of the inner edge of a horizontal

orifice made in the bottom of a large reservoir, the water rose in the tube to a height equal to that of the water in the reservoir, that is the pressure at the centre of the orifice is equal to the head over the orifice even when flow is taking place.

M. Bazin has recently repeated this experiment and found, that the water in the tube did not rise to the level of the water in the reservoir.

If Lagerjelm's statement were correct it would follow that the velocity at the centre of the orifice must be zero, which again does not agree with the results of Bazin's experiments quoted above.

42. [1]Coefficient of discharge.

The discharge per second from an orifice, is clearly the area of the jet at the contracted section GK multiplied by the mean velocity through this section, and is therefore,

$$Q = c \,.\, k \,.\, a \sqrt{2gH}.$$

Or, calling m the coefficient of discharge,

$$Q = m \,.\, a \sqrt{2gH}.$$

This coefficient m is equal to the product $c \,.\, k$. It is the only coefficient required in practical problems and fortunately it can be more easily determined than the other two coefficients c and k.

Experimental determination of the coefficient of discharge. The most satisfactory method of determining the coefficient of discharge of orifices is to measure the volume, or the weight of water, discharged under a given head in a known time.

The coefficients quoted in the Tables from M. Bazin*, were determined by finding accurately the time required to fill a vessel of known capacity.

The coefficient of discharge m, has been determined with a great degree of accuracy for sharp-edged orifices, by Poncelet and Lesbros†, Weisbach‡, Bazin and others§. In Table IV Bazin's values for m are given.

The values as given in Tables V and VI may be taken as representative of the best experiments.

For vertical, circular and square orifices, and for a head of about 3 feet above the centre of the orifice, Mr Hamilton Smith, junr.||, deduces the values of m given in Table VI.

[1] See also Appendix 1, page 555.

* *Annales des Ponts et Chaussées*, October, 1888.

† *Flow through Vertical Orifices.*

‡ *Mechanics of Engineering.*

§ *Experiments upon the Contraction of the Liquid Vein.* Bazin translated by Trautwine. Also see Appendix and the *Bulletins of the University of Wisconsin.*

|| *The Flow of Water through Orifices and over Weirs and through open Conduits and Pipes*, Hamilton Smith, junr., 1886.

TABLE V.

Experimenter	Particulars of orifice	Coefficient of discharge m
Bazin	Vertical square orifice side of square 0·6562 ft.	0·606
Poncelet and Lesbros	" " " "	0·605
Bazin	Vertical Rectangular orifice ·656 ft. high × 2·624 ft. wide with side contraction suppressed	0·627
"	Vertical circular orifice 0·6562 ft. diameter	0·598
"	Horizontal " " "	0·6035
"	" " 0·3281 "	0·6063

TABLE VI.

Circular orifices.

Diameter of orifice in ft.	0·0197	0·0295	0·039	0·0492	0·0984	0·164	0·328	0·6562	0·9843
m	0·627	0·617	0·611	0·606	0 603	0·600	0·599	0·598	0·597

Square orifices.

Side of square in feet	0·0197	0·0492	0·0984	0·197	0·5906	0·9843
m	0·631	0·612	0·607	0·605	0·604	0·603

TABLE VII.

Table showing coefficients of discharge for square and rectangular orifices as determined by Poncelet and Lesbros.

Head of water above the top of the orifice in feet	Width of orifice ·6562 feet						Width of orifice 1·968 feet	
	Depth of orifice in feet							
	·0328	·0656	·0984	·1640	·3287	·6562	·0656	·6562
·0328	·701	·660	·630	·607				
·0656	·694	·659	·634	·615	·596	·572	·643	
·1312	·683	·658	·640	·623	·603	·582	·642	·595
·2624	·670	·656	·638	·629	·610	·589	·640	·601
·3937	·663	·653	·636	·630	·612	·593	·638	·603
·6562	·655	·648	·633	·630	·615	·598	·635	·605
1·640	·642	·638	·630	·627	·617	·604	·630	·607
3·281	·632	·633	·628	·626	·615	·605	·626	·605
4·921	·615	·619	·620	·620	·611	·602	·623	·602
6·562	·611	·612	·612	·613	·607	·601	·620	·602
9·843	·609	·610	·608	·606	·603	·601	·615	·601

The heads for which Bazin determined the coefficients in Tables IV and V varied only from 2·6 to 3·3 feet, but, as will be seen from Table VII, deduced from results given by Poncelet and Lesbros* in their classical work, when the variation of head is not small, the coefficients for rectangular and square orifices vary considerably with the head.

43. Effect of suppressed contraction on the coefficient of discharge.

Sharp-edged orifice. When some part of the contraction of a transverse section of a jet issuing from an orifice is suppressed, the cross sectional area of the jet can only be obtained with difficulty.

The coefficient of discharge can, however, be easily obtained, as before, by determining the discharge in a given time. The most complete and accurate experiments on the effect of contraction are those of Lesbros, some of the results of which are quoted in Table VIII. The coefficient is most constant for square or rectangular orifices when the lateral contraction is suppressed. The reason being, that whatever the head, the variation in the section of the jet is confined to the top and bottom of the orifice, the width of the stream remaining constant, and therefore in a greater part of the transverse section the stream lines are normal to the plane of the orifice.

According to Bidone, if x is the fraction of the periphery of a sharp-edged orifice upon which the contraction is suppressed, and m the coefficient of discharge when the contraction is complete, then the coefficient for incomplete contraction is,

$$m_1 = m\,(1 + \cdot 15x),$$

for rectangular orifices, and

$$m_1 = m\,(1 + \cdot 13x)$$

for circular orifices.

Bidone's formulae give results agreeing fairly well with Lesbros' experiments.

His formulae are, however, unsatisfactory when x approaches unity, as in that case m_1 should be nearly unity.

If the form of the formula is preserved, and m taken as ·606, for m_1 to be unity it would require to have the value,

$$m_1 = m\,(1 + \cdot 65x).$$

For accurate measurements, either orifices with perfect contraction or, if possible, rectangular or square orifices with the lateral contraction completely suppressed, should be used. It will

* *Expériences hydrauliques sur les lois de l'écoulement de l'eau à travers les orifices*, etc., 1832. Poncelet and Lesbros.

generally be necessary to calibrate the orifice for various heads, but as shown above the coefficient for the latter kind is more likely to be constant.

TABLE VIII.

Table showing the effect of suppressing the contraction on the coefficient of discharge. Lesbros*.

Square vertical orifice 0·656 feet square.

Head of water above the upper edge of the orifice	Sharp-edged	Side contraction suppressed	Contraction suppressed at the lower edge	Contraction suppressed at the lower and side edges
0·06562	0·572		0·599	
0·1640	0·585	0·631	0·608	
0·3281	0·592	0·631	0·615	
0·6562	0·598	0·632	0·621	0·708
1·640	0·603	0·631	0·623	0·680
3·281	0·605	0·628	0·624	0·676
4·921	0·602	0·627	0·624	0·672
6·562	0·601	0·626	0·619	0·668
9·843	0·601	0·624	0·614	0·665

44. The form of the jet from sharp-edged orifices.

From a circular orifice the jet emerges like a cylindrical rod and retains a form nearly cylindrical for some distance from the orifice.

Fig. 51 shows three sections of a jet from a vertical circular orifice at varying distances from the orifice, as given by M. Bazin.

Fig. 51. Section of jet from circular orifice.

The flow from square orifices is accompanied by an interesting and curious phenomenon called the inversion of the jet.

At a very small distance from the orifice the section becomes as shown in Fig. 52. The sides of the jet are concave and the corners are cut off by concave sections. The section then becomes octagonal as in Fig. 53 and afterwards takes the form of a square with concave sides and rounded corners, the diagonals of the square being perpendicular to the sides of the orifice, Fig. 54.

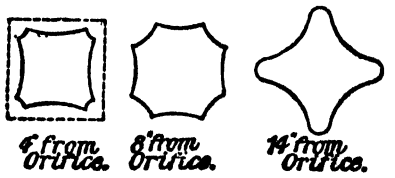

Figs. 52—54. Section of jet from square orifice.

* *Expériences hydrauliques sur les lois de l'écoulement de l'eau.*

45. Large orifices.

Table VII shows very clearly that if the depth of a vertical orifice is not small compared with the head, the coefficient of discharge varies very considerably with the head, and in the discussion of the coefficient of velocity k, it has already been shown that the distribution of velocity in jets issuing from such orifices is not uniform. As the jet moves through a large orifice the stream lines are not normal to its plane, but at some section of the stream very near to the orifice they are practically normal.

If now it is assumed that the pressure is constant and equal to the atmospheric pressure and that the shape of this section is known, the discharge through it can be calculated.

Rectangular orifice. Let *efgh*, Fig. 55, be the section by a vertical plane EF of the stream issuing from a vertical rectangular orifice. Let the crest E of the stream be at a depth h_0 below the free surface of the water in the vessel and the under edge F at a depth h_1.

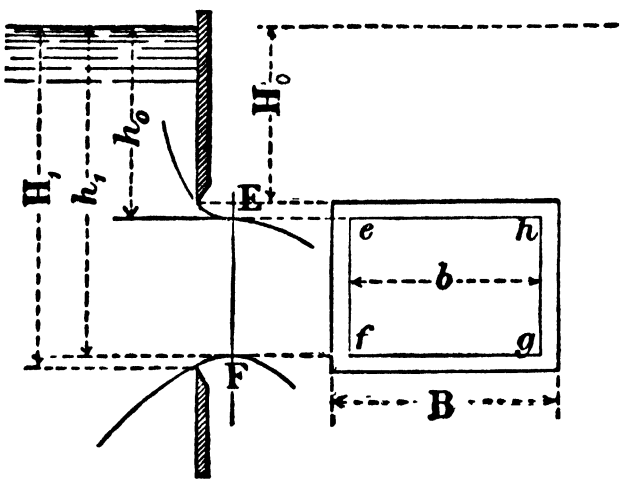

Fig. 55.

At any depth h, since the pressure is assumed constant in the section, the fall of free level is h, and the velocity of flow through the strip of width dh is therefore, $k\sqrt{2gh}$, and the discharge is $kb\sqrt{2gh}\,dh$.

If k be assumed constant for all the filaments the total discharge in cubic feet per second is

$$Q = k\sqrt{2g}\int_{h_0}^{h_1} bh^{\frac{1}{2}}dh = \tfrac{2}{3}\sqrt{2g}\,kb\,(h_1^{\frac{3}{2}} - h_0^{\frac{3}{2}}).$$

Here at once a difficulty is met with. The dimensions h_0, h_1 and b cannot easily be determined, and experiment shows that they vary with the head of water over the orifice, and that they cannot therefore be written as fractions of H_0, H_1, and B.

By replacing h_0, h_1 and b by H_0, H_1 and B an empirical formula of the same form is obtained which, by introducing a coefficient c, can be made to agree with experiments. Then

$$Q = \tfrac{2}{3}c\sqrt{2g}\,.\,B\,(H_1^{\frac{3}{2}} - H_0^{\frac{3}{2}}),$$

or replacing $\frac{2}{3}c$ by n,

$$Q = n\sqrt{2g}\,.\,B\,(H_1^{\frac{3}{2}} - H_0^{\frac{3}{2}}) \quad\ldots\ldots\ldots\ldots\ldots\ldots\ldots (1).$$

The coefficient n varies with the head H_0, and for any orifice the simpler formula

$$Q = m\,.\,a\,.\,\sqrt{2gH} \quad\ldots\ldots\ldots\ldots\ldots\ldots\ldots\ldots\ldots (2),$$

a being the area of the orifice and H the head at the centre, can be used with equal confidence, for if n is known for the particular orifice for various values of H_0, m will also be known.

From Table VII probable values of m for any large sharp-edged rectangular orifices can be interpolated.

Rectangular sluices. If the lower edge of a sluice opening is some distance above the bottom of the channel the discharge through it will be practically the same as through a sharp-edged orifice, but if it is flush with the bottom of the channel, the contraction at this edge is suppressed and the coefficient of discharge will be slightly greater as shown in Table VIII.

46. Drowned orifices.

When an orifice is submerged as in Fig. 56 and the water in the up-stream tank or reservoir is moving so slowly that its velocity may be neglected, the head causing velocity of flow through any filament is equal to the difference of the up- and down-stream levels. Let H be the difference of level of the water on the two sides of the orifice.

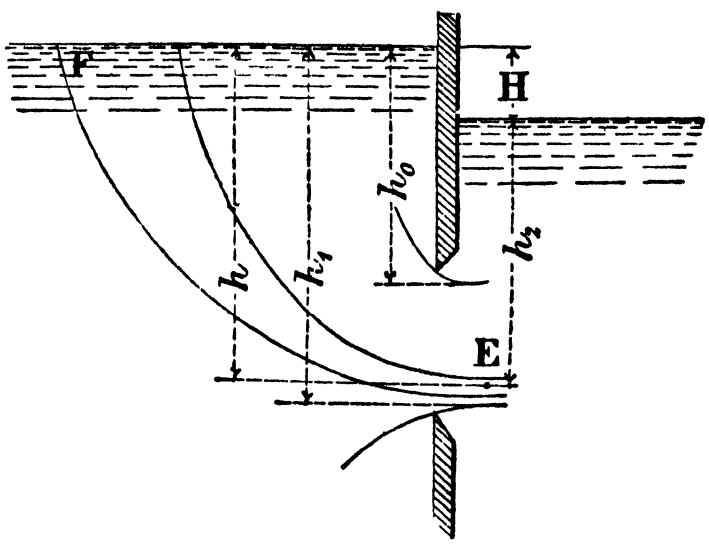

Fig. 56.

Consider any stream line FE which passes through the orifice at E. The pressure head at E is equal to h_2, the depth of E below the down-stream level. If then at F the velocity is zero,

$$\frac{v_E^2}{2g} + h_2 = h,$$

or

$$v_E = \sqrt{2g\,(h - h_2)}$$
$$= \sqrt{2g\,.\,H},$$

or taking a coefficient of velocity k

$$v_E = k\sqrt{2g\,.\,H},$$

which, since H is constant, is the same for all filaments of the orifice.

If the coefficients of discharge and contraction are m and c respectively the whole discharge through the orifice is then

$$Q = cka\sqrt{2gH} = m\,.\,a\,.\,\sqrt{2gH}.$$

*The coefficient m may be taken as 0·6.

47. Partially drowned orifice.

If the orifice is partially drowned, as in Fig. 57, the discharge may be considered in two parts. Through the upper part AC the discharge, using (2) section 45, is

$$Q_1 = ma\sqrt{2g}\left(\frac{H_1 + H_0}{2}\right)^{\frac{1}{2}},$$

and through the lower part BC

$$Q_2 = m_1\,.\,a_1\,.\,\sqrt{2g\,.\,H_1}.$$

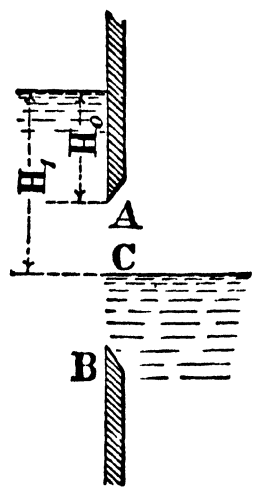

Fig. 57.

48. Velocity of approach.

It is of interest to consider the effect of the water approaching an orifice having what is called a velocity of approach, which will be equal to the velocity of the water in the stream above the orifice.

In Fig. 56 let the water at F approaching the drowned orifice have a velocity v_F.

Bernoulli's equation for the stream line drawn is then

$$\frac{v_E^2}{2g} + h_2 = h + \frac{v_F^2}{2g},$$

and

$$v_E = \sqrt{2g}\left(H + \frac{v_F^2}{2g}\right)^{\frac{1}{2}},$$

which is again constant for all filaments of the orifice.

Then

$$Q = m\,.\,a\,.\,\sqrt{2g}\,.\left(H + \frac{v_F^2}{2g}\right)^{\frac{1}{2}}.$$

* *Bulletins of University of Wisconsin*, Nos. 216 and 270.

49. Effect of velocity of approach on the discharge through a large rectangular orifice.

If the water approaching the large orifice, Fig. 55, has a velocity of approach v_1, Bernoulli's equation for the stream line passing through the strip at depth h, will be

$$\frac{p_a}{w} + \frac{v^2}{2g} = \frac{p_a}{w} + h + \frac{v_1^2}{2g},$$

p_a being the atmospheric pressure, or putting in a coefficient of velocity,

$$v = k\sqrt{2g\left(h + \frac{v_1^2}{2g}\right)}.$$

The discharge through the orifice is now,

$$Q = k\sqrt{2g}\int_{h_0+\frac{v_1^2}{2g}}^{h_1+\frac{v_1^2}{2g}} b\left(h + \frac{v_1^2}{2g}\right)^{\frac{1}{2}} dh$$

$$= \tfrac{2}{3}\, k\sqrt{2g}\, b\left\{\left(h_1 + \frac{v_1^2}{2g}\right)^{\frac{3}{2}} - \left(h_0 + \frac{v_1^2}{2g}\right)^{\frac{3}{2}}\right\}.$$

50. Coefficient of resistance.

In connection with the flow through orifices, and hydraulic plant generally, the term "coefficient of resistance" is frequently used. Two meanings have been attached to the term. Sometimes it is defined as the ratio of the head lost in a hydraulic system to the effective head, and sometimes as the ratio of the head lost to the total head available. According to the latter method, if H is the total head available and h_f the head lost, the coefficient of resistance is

$$c_r = \frac{h_f}{H}.$$

51. Sudden enlargement of a current of water.

It seems reasonable to proceed from the consideration of flow through orifices to that of the flow through mouthpieces, but before doing so it is desirable that the effect of a sudden enlargement of a stream should be considered.

Suppose for simplicity that a pipe as in Fig. 58 is suddenly enlarged, and that there is a continuous sinuous flow along the pipe. (See section 284.)

At the enlargement of the pipe, the stream suddenly enlarges, and, as shown in the figure, in the corners of the large pipe it may be assumed that eddy motions are set up which cause a loss of energy.

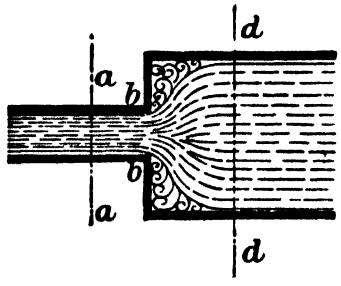

Fig. 58.

Consider two sections *aa* and *dd* at such a distance from *bb* that the flow is steady.

Then, the total head at *dd* equals the total head at *aa* minus the loss of head between *aa* and *dd*, or if h is the loss of head due to shock, then

$$\frac{p_a}{w} + \frac{v_a^2}{2g} = \frac{p_d}{w} + \frac{v_d^2}{2g} + h.$$

Let A_a and A_d be the area at *aa* and *dd* respectively.

Since the flow past *aa* equals that past *dd*,

$$v_a A_a = v_d A_d.$$

Then, assuming that each filament of fluid at *aa* has the velocity v_a, and v_d at *dd*, the momentum of the quantity of water which passes *aa* in unit time is equal to $\frac{w}{g} A_a v_a^2$, and the momentum of the water that passes *dd* is

$$\frac{w A_a v_a v_d}{g},$$

the momentum of a mass of M pounds moving with a velocity v feet per second being Mv pounds feet.

The change of momentum is therefore,

$$\frac{w}{g} A_a v_a (v_a - v_d).$$

The forces acting on the water between *aa* and *dd* to produce this change of momentum, are

$$p_a A_a \text{ acting on } aa,\ p_d A_d \text{ acting on } dd,$$

and, if p is the mean pressure per unit area on the annular ring *bb*, an additional force $p(A_d - A_a)$.

There is considerable doubt as to what is the magnitude of the pressure p, but it is generally assumed that it is equal to p_a, for the following reason.

The water in the enlarged portion of the pipe may be looked upon as divided into two parts, the one part having a motion of translation, while the other part, which is in contact with the annular ring, is practically at rest. (See section 284.)

If this assumption is correct, then it is to be expected that the pressure throughout this still water will be practically equal at all points and in all directions, and must be equal to the pressure in the stream at the section *bb*, or the pressure p is equal to p_a.

Therefore

$$p_d A_d - p_a (A_d - A_a) - p_a A_a = w \frac{v_a A_a}{g} (v_a - v_d),$$

from which $$(p_d - p_a) A_d = w \frac{A_a v_a}{g} (v_a - v_d);$$

and since $$A_a v_a = A_d v_d,$$

therefore $$\frac{p_a}{w} = \frac{p_d}{w} - \frac{v_a v_d}{g} + \frac{v_d^2}{g}.$$

Adding $\frac{v_a^2}{2g}$ to both sides of the equation and separating $\frac{v_d^2}{g}$ into two parts,

$$\frac{p_a}{w} + \frac{v_a^2}{2g} = \frac{p_d}{w} + \frac{v_d^2}{2g} + \frac{(v_a - v_d)^2}{2g},$$

or h the loss of head due to shock is equal to

$$\frac{(v_a - v_d)^2}{2g}.$$

According to St Venant this quantity should be increased by an amount equal to $\frac{1}{9}\frac{v_d^2}{2g}$, but this correction is so small that as a rule it can be neglected.

52. Sudden contraction of a current of water.

Suppose a pipe partially closed by means of a diaphragm as in Fig. 59.

As the stream approaches the diaphragm —which is supposed to be sharp-edged— it contracts in a similar way to the stream passing through an orifice on the side of a vessel, so that the minimum cross sectional area of the flow will be less than the area of the orifice*

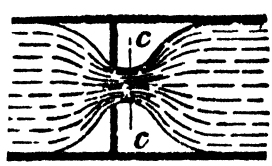

Fig. 59.

The loss of head due to this contraction, or due to passing through the orifice is small, as seen in section 39, but due to the sudden enlargement of the stream to fill the pipe again, there is a considerable loss of head.

Let A be the area of the pipe and a of the orifice, and let c be the coefficient of contraction at the orifice.

Then the area of the stream at the contracted section is ca, and, therefore, the loss of head due to shock

$$= \frac{v_A^2\left(\frac{A}{ca} - 1\right)^2}{2g}.$$

* The pressure at the section cc will be less than in the pipe to the left of the diaphragm. From Bernoulli's equation an expression similar to eq. 1 p. 46 can be obtained for the discharge through the pipe, and such a diaphragm can be used as a meter. *Proc. Inst. C.E.* Vol. CXCVII.

If the pipe simply diminishes in diameter as in Fig. 58, the section of the stream enlarges from the contracted area *ca* to fill the pipe of area *a*, therefore the loss of head in this case is

$$h = \frac{v_a^2}{2g}\left(\frac{1}{c} - 1\right)^2 \quad \text{.....(1).}$$

Or making St Venant correction

$$h = \frac{v_a^2}{2g}\left\{\left(\frac{1}{c} - 1\right)^2 + \frac{1}{9}\right\} \quad \text{.....(2).}$$

**Value of the coefficient c.* The mean value of *c* for a sharp-edged circular orifice is, as seen in Table IV, about 0·6, and this may be taken as the coefficient of contraction in this formula.

Substituting this value in equation (1) the loss of head is found to be $\frac{\cdot 44v^2}{2g}$, and in equation (2), $\frac{\cdot 55v^2}{2g}$, v being the velocity in the small pipe. It may be taken therefore as $\frac{0\cdot 5v^2}{2g}$. Further experiments are required before a correct value can be assigned.

53. Loss of head due to sharp-edged entrance into a pipe or mouthpiece.

When water enters a pipe or mouthpiece from a vessel through a sharp-edged entrance, as in Fig. 61, there is first a contraction, and then an enlargement, as in the second case considered in section 52.

The loss of head may be, therefore, taken as approximately $\frac{0\cdot 5v^2}{2g}$ and this agrees with the experimental value of $\frac{0\cdot 505v^2}{2g}$ given by Weisbach.

This value is probably too high for small pipes and too low for large pipes†.

54. Mouthpieces. Drowned Mouthpieces.

If an orifice is provided with a short pipe or mouthpiece, through which the liquid can flow, the discharge may be very different from that of a sharp-edged orifice, the difference depending upon the length and form of the mouthpiece. If the orifice is cylindrical as shown in Fig. 60, being sharp at the inner edge, and so short that the stream after converging at the inner edge clears the outer edge, it behaves as a sharp-edged orifice.

‡*Short external cylindrical mouthpieces.* If the mouthpiece is cylindrical as ABFE, Fig. 61, having a sharp edge at AB and a §length of from one and a half to twice its diameter, the jet

* *Proc. Inst. C.E.* Vol. CXCVII.

† See M. Bazin, *Expériences nouvelles sur la distribution des vitesses dans les tuyaux.* ‡ See *Bulletins* Nos. 216 and 270 *University of Wisconsin.*

§ Shorter mouthpieces are unreliable.

contracts to CD, and then expands to fill the pipe, so that at EF it discharges full bore, and the coefficient of contraction is then unity. Experiment shows, that the coefficient of discharge is

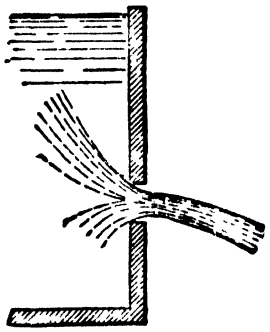

Fig. 60.

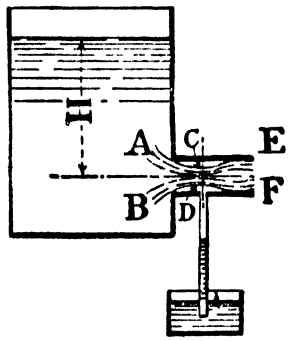

Fig. 61.

from 0·80 to 0·85, the coefficient diminishing with the diameter of the tube. The coefficient of contraction being unity, the coefficients of velocity and discharge are equal. Good mean values, according to Weisbach, are 0·815 for cylindrical tubes, and 0·819 for tubes of prismatic form.

These coefficients agree with those determined on the assumption that the only head lost in the mouthpiece is that due to sudden enlargement, and is

$$\frac{0{\cdot}5v^2}{2g},$$

v being the velocity of discharge at EF.

Applying Bernoulli's theorem to the sections CD and EF, and taking into account the loss of head of $\frac{{\cdot}5v^2}{2g}$, and p_a as the atmospheric pressure,

$$\frac{p_{CD}}{w} + \frac{v_{CD}^2}{2g} = \frac{p_a}{w} + \frac{v^2}{2g} + \frac{{\cdot}5v^2}{2g} = H + \frac{p_a}{w},$$

or

$$\frac{1{\cdot}5v^2}{2g} = H.$$

Therefore $$v^2 = {\cdot}66 \times 2gH$$

and $$v = {\cdot}812\sqrt{2gH}.$$

The area of the jet at EF is a, and therefore, the discharge per second is

$$a \,.\, v = {\cdot}812a\sqrt{2gH}.$$

Or m, the coefficient of discharge, is 0·812.

The pressure head at the section CD. Taking the area at CD as 0·606 the area at EF,

$$v_{CD} = 1{\cdot}65v.$$

Therefore $\frac{p_{CD}}{w} = \frac{p_a}{w} + \frac{1{\cdot}5v^2}{2g} - \frac{2{\cdot}72v^2}{2g} = \frac{p_a}{w} - \frac{1{\cdot}22v^2}{2g}$,

or the pressure at C is less than the atmospheric pressure.

If a pipe be attached to the mouthpiece, as in Fig. 61, and the lower end dipped in water, the water should rise to a height of about $\frac{1{\cdot}22v^2}{2g}$ feet above the water in the vessel.

55. Borda's mouthpiece.

A short cylindrical mouthpiece projecting into the vessel, as in Fig. 62, is called a Borda's mouthpiece, and is of interest, as the coefficient of discharge upon certain assumptions can be readily calculated. Let the mouthpiece be so short that the jet issuing at EF falls clear of GH. The orifice projecting into the liquid has the effect of keeping the liquid in contact with the face AD practically at rest, and at all points on it except the area EF the hydrostatic pressure will, therefore, simply depend upon the depth below the free surface AB. Imagine the mouthpiece produced to meet the face BC in the area IK. Then the hydrostatic pressure on AD, neglecting EF, will be equal to the hydrostatic pressure on BC, neglecting IK.

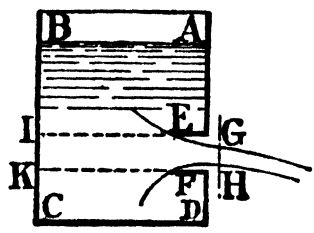

Fig. 62.

Again, BC is far enough away from EF to assume that the pressure upon it follows the hydrostatic law.

The hydrostatic pressure on IK, therefore, is the force which gives momentum to the water escaping through the orifice, overcomes the pressure on EF, and the resistance of the mouthpiece.

Let H be the depth of the centre of the orifice below the free surface and p the atmospheric pressure. Neglecting frictional resistances, the velocity of flow v, through the orifice, is $\sqrt{2gH}$.

Let a be the area of the orifice and ω the area of the transverse section of the jet. The discharge per second will be $w \,.\, \omega \sqrt{2gH}$ lbs.

The hydrostatic pressure on IK is

$$pa + waH \text{ lbs.}$$

The hydrostatic pressure on EF is pa lbs.

The momentum given to the issuing water per second, is

$$M = \frac{w}{g} \,.\, \omega \,.\, 2gH.$$

Therefore $$pa + \frac{w}{g}\omega 2gH = pa + waH,$$

and $$\omega = \tfrac{1}{2}a.$$

The coefficient of contraction is then, in this case, equal to one half.

Experiments by Borda and others, show that this result is justified, the experimental coefficient being slightly greater than $\frac{1}{2}$.

56. Conical mouthpieces and nozzles.

These are either convergent as in Fig. 63, or divergent as in Fig. 64.

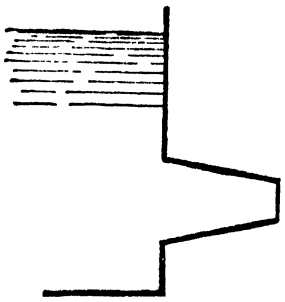

Fig. 63.

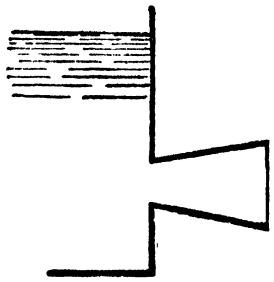

Fig. 64.

Calling the diameter of the mouthpiece the diameter at the outlet, a divergent tube gives a less, and a convergent tube a greater discharge than a cylindrical tube of the same diameter.

Experiments show that the maximum discharge for a convergent tube is obtained when the angle of the cone is from 12 to $13\frac{1}{2}$ degrees, and it is then $0{\cdot}94 . a . \sqrt{2gh}$. If, instead of making the convergent mouthpiece conical, its sides are curved as in Fig. 65, so that it follows as near as possible the natural form of the stream lines, the coefficient of discharge may, with high heads, approximate very nearly to unity.

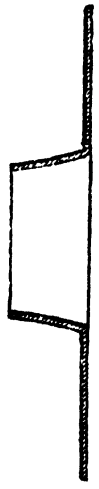

Fig. 65.

Weisbach*, using the method described on page 55 to determine the velocity of flow, obtained, for this mouthpiece, the following values of k. Since the mouthpiece discharges full the coefficients of velocity k and discharge m are practically equal.

Head in feet	0·66	1·64	11·48	55·8	338
k and m	·959	·967	·975	·994	·994

According to Freeman†, the fire-hose nozzle shown in Fig. 66 has a coefficient of velocity of ·977.

* *Mechanics of Engineering.*
† *Transactions Am. Soc. C.E.*, Vol. XXI.

If the mouthpiece is first made convergent, and then divergent,

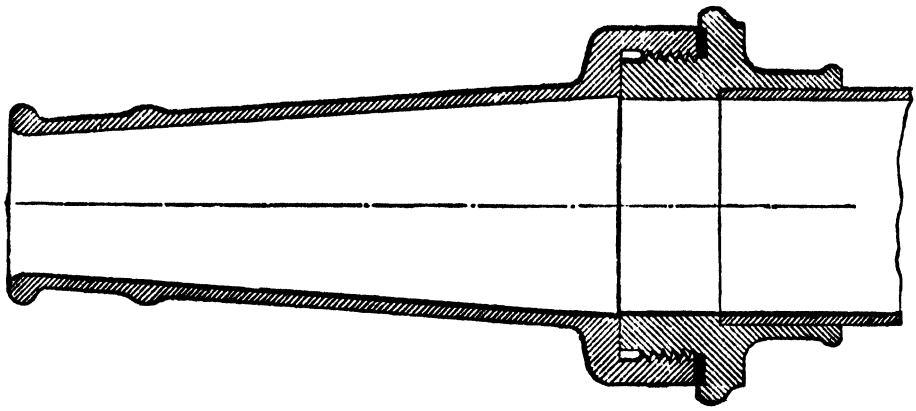

Fig. 66.

as in Fig. 67, the divergence being sufficiently gradual for the stream lines to remain in contact with the tube, the coefficient of contraction is unity and there is but a small loss of head. The velocity of efflux from EF is then nearly equal to $\sqrt{2gH}$ and the discharge is $m.a.\sqrt{2gH}$, a being the area of EF, and the coefficient m approximates to unity.

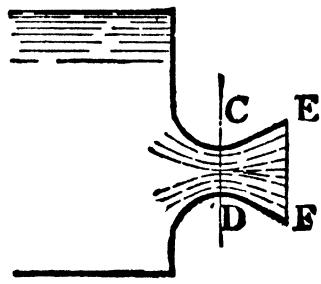

Fig. 67.

It would appear, that the discharge could be increased indefinitely by lengthening the divergent part of the tube and thus increasing a, but as the length increases, the velocity decreases due to the friction of the sides of the tube, and further, as the discharge increases, the velocity through the contracted section CD increases, and the pressure head at CD consequently falls.

Calling p_a the atmospheric pressure, p_1 the pressure at CD, and v_1 the velocity at CD, then

$$\frac{p_1}{w} + \frac{v_1^2}{2g} = H + \frac{p_a}{w}$$

and

$$\frac{p_1}{w} = H + \frac{p_a}{w} - \frac{v_1^2}{2g}.$$

If $\frac{v_1^2}{2g}$ is greater than $H + \frac{p_a}{w}$, p_1 becomes negative.

As pointed out, however, in connection with Froude's apparatus, page 43, if continuity is to be maintained, the pressure cannot be negative, and in reality, if water is the fluid, it cannot be less than $\frac{1}{5}$ the atmospheric pressure, due to the separation of the air from the water. The velocity v_1 cannot, therefore, be increased indefinitely.

Assuming the pressure can just become zero, and taking the atmospheric pressure as equivalent to a head of 34 ft. of water, the maximum possible velocity, is

$$v_1 = \sqrt{2g\ (\mathrm{H} + 34\ \mathrm{ft.})}$$

and the maximum ratio of the area of EF to CD is

$$\sqrt{1 + \frac{34\ \mathrm{ft.}}{\mathrm{H}}}.$$

Practically, the maximum value of v_1 may be taken as

$$v_1 = \sqrt{2g\ (\mathrm{H} + 24)\ \mathrm{ft.}}$$

and the maximum ratio of EF to CD as

$$\sqrt{1 + \frac{24\ \mathrm{ft.}}{\mathrm{H}}}.$$

The maximum discharge is

$$\mathrm{Q} = m.\frac{a\sqrt{2g\ (\mathrm{H} + 24)}}{\sqrt{1 + \frac{24}{\mathrm{H}}}}.$$

The ratio given of EF to CD may be taken as the maximum ratio between the area of a pipe and the throat of a Venturi meter to be used in the pipe.

57. Flow through orifices and mouthpieces under constant pressure.

The head of water causing flow through an orifice may be produced by a pump or other mechanical means, and the discharge may take place into a vessel, such as the condenser of a steam engine, in which the pressure is less than that of the atmosphere.

For example, suppose water to be discharged from a cylinder A, into a vessel B, Fig. 68, through an orifice or mouthpiece by means of a piston loaded with P lbs., and let the pressure per sq. foot in B be p_0 lbs.

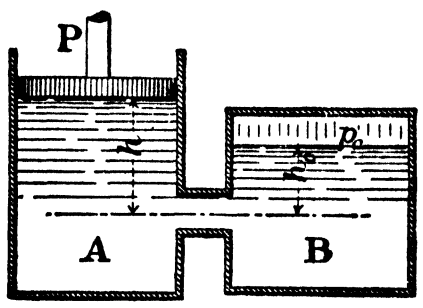

Fig. 68.

Let the area of the piston be A square feet. Let h be the height of the water in the cylinder above the centre of the orifice and h_0 of the water in the vessel B. The theoretical effective head forcing water through the orifice may be written

$$\mathrm{H} = \frac{\mathrm{P}}{\mathrm{A}w} + h - \frac{p_0}{w} - h_0.$$

If P is large h_0 and h will generally be negligible.

At the orifice the pressure head is $h_0 + \frac{p_0}{w}$, and therefore for any stream line through the orifice, if there is no friction,

$$\frac{v^2}{2g} + h_0 + \frac{p_0}{w} = \frac{P}{Aw} + h$$

or

$$\frac{v^2}{2g} = \frac{P}{Aw} + h - h_0 - \frac{p_0}{w}.$$

The actual velocity will be less than v, due to friction, and if k is a coefficient of velocity, the velocity is then

$$v = k \,.\sqrt{2gH},$$

and the discharge is $\quad Q = m \,.\, a\sqrt{2gH}.$

In practical examples the cylinder and the vessel will generally be connected by a short pipe, for which the coefficient of velocity will depend upon the length.

If it is only a few feet long the principal loss of head will be at the entrance to the pipe, and the coefficient of discharge will probably vary between 0·65 and 0·85.

The effect of lengthening the pipe will be understood after the chapter on flow through pipes has been read.

Example. Water is discharged from a pump into a condenser in which the pressure is 3 lbs. per sq. inch through a short pipe 3 inches diameter.

The pressure in the pump is 20 lbs. per sq. inch.

Find the discharge into the condenser, taking the coefficient of discharge 0·75.

The effective head is

$$H = \frac{20 \times 144}{62{\cdot}4} - \frac{3 \times 144}{62{\cdot}4}$$

$$= 39{\cdot}2 \text{ feet.}$$

Therefore, $\quad Q = 75 \times {\cdot}7854 \times \frac{9}{144} \times \sqrt{64{\cdot}4 \times 39{\cdot}2}$ cubic feet per sec.

$= 1{\cdot}84$ cubic ft. per sec.

58. Time of emptying a tank or reservoir.

Suppose a reservoir to have a sharp-edged horizontal orifice as in Fig. 44. It is required to find the time taken to empty the reservoir.

Let the area of the horizontal section of the reservoir at any height h above the orifice be A sq. feet, and the area of the orifice a sq. feet, and let the ratio $\frac{A}{a}$ be sufficiently large that the velocity of the water in the reservoir may be neglected.

When the surface of the water is at any height h above the orifice, the volume which flows through the orifice in any time ∂t will be $ma\sqrt{2gh}\,.\,\partial t$.

The amount ∂h by which the surface of water in the reservoir falls in the time ∂t is

$$\partial h = \frac{ma\sqrt{2gh}\,\partial t}{A},$$

or

$$\partial t = \frac{A\partial h}{ma\sqrt{2gh}}.$$

The time for the water to fall from a height H to H_1 is

$$t = \int_{H_1}^{H} \frac{A dh}{ma\sqrt{2gh}} = \frac{1}{a\sqrt{2g}} \int_{H_1}^{H} \frac{A dh}{mh^{\frac{1}{2}}}.$$

If A is constant, and m is assumed constant, the time required for the surface to fall from a height H to H_1 above the orifice is

$$t = \frac{1}{ma\sqrt{2g}} \int_{H_1}^{H} \frac{A dh}{h^{\frac{1}{2}}}$$

$$= \frac{2A}{ma\sqrt{2g}} (\sqrt{H} - \sqrt{H_1}),$$

and the time to empty the vessel is

$$t = \frac{2A\sqrt{H}}{ma\sqrt{2g}},$$

or is equal to twice the time required for the same volume of water to leave the vessel under a constant head H.

Time of emptying a lock with vertical drowned sluice. Let the water in the lock when the sluice is closed be at a height H, Fig. 56, above the down-stream level.

Then the time required is that necessary to reduce the level in the lock by an amount H.

When the flow is taking place, let x be the height of the water in the lock at any instant above the down-stream water.

Let A be the sectional area of the lock, at the level of the water in the lock, a the area of the sluice, and m its coefficient of discharge.

The discharge through the sluice in time ∂t is

$$\partial Q = m \,.\, a\sqrt{2gx} \,.\, \partial t.$$

If ∂x is the distance the surface falls in the lock in time ∂t, then

$$A\partial x = ma\sqrt{2gx}\,\partial t,$$

or

$$\partial t = \frac{A\,\partial x}{ma\sqrt{2g}\,x^{\frac{1}{2}}}.$$

To reduce the level by an amount H,

$$t = \int_0^H \frac{A\,dx}{ma\sqrt{2g}\,x^{\frac{1}{2}}}.$$

If m and A are constant,

$$t = \frac{2A\sqrt{H}}{ma\sqrt{2g}}.$$

Example. A reservoir, 200 yards long and 150 yards wide at the bottom, and having side slopes of 1 to 1, has a depth of water in it of 25 feet. A short pipe 3 feet diameter is used to draw off water from the reservoir.

Find the time taken for the water in the reservoir to fall 10 feet. The coefficient of discharge for the pipe is 0·7.

When the water has a depth h the area of the water surface is

$$A = (600 + 2h)(450 + 2h).$$

The area of the pipe is $a = 7{\cdot}068$ sq. feet.

Therefore
$$t = \frac{1}{0{\cdot}70\sqrt{2g}\,.\,7{\cdot}068}\int_{15}^{25}\frac{(600+2h)(450+2h)\,dh}{h^{\frac{1}{2}}}$$

$$= \frac{1}{39{\cdot}6}\left[2 \times 270000h^{\frac{1}{2}} + \tfrac{2}{3} \times 2100h^{\frac{3}{2}} + \tfrac{2}{5}h^{\frac{5}{2}}\right]_{15}^{25}$$

$$= \frac{1}{39{\cdot}6}(610200 + 93800 + 3606)$$

$$= 17{,}850 \text{ secs.}$$

$$= 4{\cdot}95 \text{ hours.}$$

Example. A horizontal boiler 6 feet diameter and 30 feet long is half full of water.

Find the time of emptying the boiler through a short vertical pipe 3 inches diameter attached to the bottom of the boiler.

The pipe may be taken as a mouthpiece discharging full, the coefficient of velocity for which is 0·8.

Let r be the radius of the boiler.

When the water has any depth h above the bottom of the boiler the area A is

$$= 30 \times 2\sqrt{r^2 - (r-h)^2}$$
$$= 30 \times 2\sqrt{2rh - h^2}.$$

The area of the pipe is 0·049 sq. feet.

Therefore
$$t = \frac{2 \times 30}{{\cdot}8 \times 0{\cdot}049\sqrt{2g}}\int_0^r \frac{\sqrt{2rh - h^2}\,dh}{\sqrt{h}}$$

$$= 191\int_0^r (2r - h)^{\frac{1}{2}}\,dh$$

$$= \tfrac{2}{3}\,.\,191\,(2r)^{\frac{3}{2}} - r^{\frac{3}{2}}$$

$$= 127{\cdot}4 \times 9{\cdot}5$$

$$= 1210 \text{ secs.}$$

EXAMPLES.

(1) Find the velocity due to a head of 100 ft.

(2) Find the head due to a velocity of 500 ft. per sec.

(3) Water issues vertically from an orifice under a head of 40 ft. To what height will the jet rise, if the coefficient of velocity is 0·97?

(4) What must be the size of a conoidal orifice to discharge 10 c. ft. per second under a head of 100 ft.? $m = {\cdot}925$.

(5) A jet 3 in. diameter at the orifice rises vertically 50 ft. Find its diameter at 25 ft. above the orifice.

(6) An orifice 1 sq. ft. in area discharges 18 c. ft. per second under a head of 9 ft. Assuming coefficient of velocity=0·98, find coefficient of contraction.

(7) The pressure in the pump cylinder of a fire-engine is 14,400 lbs. per sq. ft.; assuming the resistance of the valves, hose, and nozzle is such that the coefficient of resistance is 0·5, find the velocity of discharge, and the height to which the jet will rise.

(8) The pressure in the hose of a fire-engine is 100 lbs. per sq. inch; the jet rises to a height of 150 ft. Find the coefficient of velocity.

(9) A horizontal jet issues under a head of 9 ft. At 6 ft. from the orifice it has fallen vertically 15 ins. Find the coefficient of velocity.

(10) Required the coefficient of resistance corresponding to a coefficient of velocity=0·97.

(11) A fluid of one quarter the density of water is discharged from a vessel in which the pressure is 50 lbs. per sq. in. (absolute) into the atmosphere where the pressure is 15 lbs. per sq. in. Find the velocity of discharge.

(12) Find the diameter of a circular orifice to discharge 2000 c. ft. per hour, under a head of 6 ft. Coefficient of discharge 0·60.

(13) A cylindrical cistern contains water 16 ft. deep, and is 1 sq. ft. in cross section. On opening an orifice of 1 sq. in. in the bottom, the water level fell 7 ft. in one minute. Find the coefficient of discharge.

(14) A miner's inch is defined to be the discharge through an orifice in a vertical plane of 1 sq. in. area, under an average head of 6½ ins. Find the supply of water per hour in gallons. Coefficient of discharge 0·62.

(15) A vessel fitted with a piston of 12 sq. ft. area discharges water under a head of 10 ft. What weight placed on the piston would double the rate of discharge?

(16) An orifice 2 inches square discharges under a head of 100 feet 1·338 cubic feet per second. Taking the coefficient of velocity at 0·97, find the coefficient of contraction.

(17) Find the discharge per minute from a circular orifice 1 inch diameter, under a constant pressure of 34 lbs. per sq. inch, taking 0·60 as the coefficient of discharge.

(18) The plunger of a fire-engine pump of one quarter of a sq. ft. in area is driven by a force of 9542 lbs. and the jet is observed to rise to a height of 150 feet. Find the coefficient of resistance of the apparatus.

(19) An orifice 8 feet wide and 2 feet deep has 12 feet head of water above its centre on the up-stream side, and the backwater on the other side is at the level of the centre of the orifice. Find the dis[illegible] $m=m_1=0·62$.

(20) Ten c. ft. of water per second flow through a pipe of 1 sq. ft. area, which suddenly enlarges to 4 sq. ft. area. Taking the pressure at 100 lbs. per sq. ft. in the smaller part of the pipe, find (1) the head lost in shock, (2) the pressure in the larger part, (3) the work expended in forcing the water through the enlargement.

(21) A pipe of 3″ diameter is suddenly enlarged to 5″ diameter. A U tube containing mercury is connected to two points, one on each side of the enlargement, at points where the flow is steady. Find the difference in level in the two limbs of the U when water flows at the rate of 2 c. ft. per second from the small to the large section and *vice versâ*. The specific gravity of mercury is 13·6. Lond. Un.

(22) A pipe is suddenly enlarged from 2½ inches in diameter to 3½ inches in diameter. Water flows through these two pipes from the smaller to the larger, and the discharge from the end of the bigger pipe is two gallons per second. Find:—

(*a*) The loss of head, and gain of pressure head, at the enlargement.

(*b*) The ratio of head lost to velocity head in small pipe.

(23) The head and tail water of a vertical-sided lock differ in level 12 ft. The area of the lock basin is 700 sq. ft. Find the time of emptying the lock, through a sluice of 5 sq. ft. area, with a coefficient 0·5. The sluice discharges below tail water level.

(24) A tank 1200 sq. ft. in area discharges through an orifice 1 sq. ft. in area. Calculate the time required to lower the level in the tank from 50 ft. to 25 ft. above the orifice. Coefficient of discharge 0·6.

(25) A vertical-sided lock is 65 ft. long and 18 ft. wide. Lift 15 ft. Find the area of a sluice below tail water to empty the lock in 5 minutes. Coefficient 0·6.

(26) A reservoir has a bottom width of 100 feet and a length of 125 feet.

The sides of the reservoir are vertical.

The reservoir is connected to a second reservoir of the same dimensions by means of a pipe 2 feet diameter. The surface of the water in the first reservoir is 17 feet above that in the other. The pipe is below the surface of the water in both reservoirs. Find the time taken for the water in the two reservoirs to become level. Coefficient of discharge 0·8.

59. Notches and Weirs.

When the sides of an orifice are produced, so that they extend beyond the free surface of the water, as in Figs. 69 and 70, it is called a notch.

Notches are generally made triangular or rectangular as shown in the figures and are largely used for gauging the flow of water.

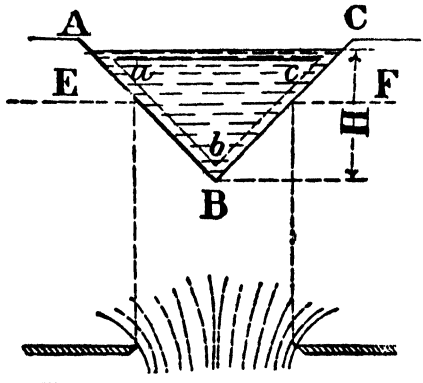

Fig. 69. Triangular Notch.

For example, if the flow of a small stream is required, a dam is constructed across the stream and the water allowed to pass through a notch cut in a board or metal plate.

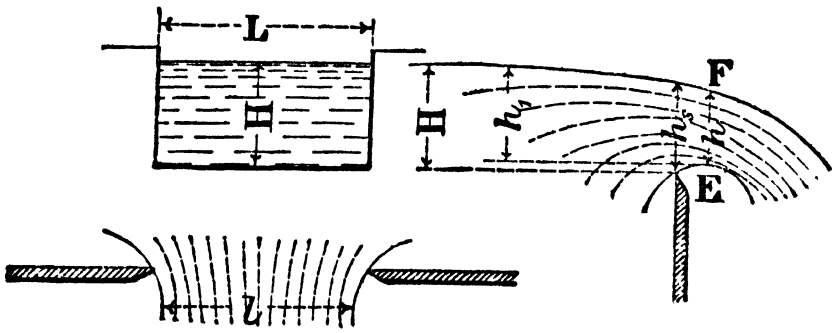

Fig. 70. Rectangular Notch.

They can conveniently be used for measuring the compensation water to be supplied from collecting reservoirs, and also to gauge the supply of water to water wheels and turbines.

The term weir is a name given to a structure used to dam up a stream and over which the water flows.

The conditions of flow are practically the same as through a rectangular notch, and hence such notches are generally called weirs, and in what follows the latter term only is used. The top of the weir corresponds to the horizontal edge of the notch and is called the sill of the weir.

The sheet of water flowing over a weir or through a notch is generally called the vein, sheet, or nappe.

The shape of the nappe depends upon the form of the sill and sides of the weir, the height of the sill above the bottom of the up-stream channel, the width of the up-stream channel, and the construction of the channel into which the nappe falls.

The effect of the form of the sill and of the down-stream channel will be considered later, but, for the present, attention will be confined to weirs with sharp edges, and to those in which the air has free access under the nappe so that it detaches itself entirely from the weir as shown in Fig. 70.

60. *Rectangular sharp-edged weir.

If the crest and sides of the weir are made sharp-edged, as shown in Fig. 70, and the weir is narrower than the approaching channel, and the sill some distance above the bed of the stream, there is at the sill and at the sides, contraction similar to that at a sharp-edged orifice.

The surface of the water as it approaches the weir falls, taking a curved form, so that the thickness h_s, Fig. 70, of the vein over the weir, is less than H, the height, above the sill, of the water at

* For circular weirs see page 561.

some distance from the weir. The height H, which is called the head over the weir, should be carefully measured at such a distance from it, that the water surface has not commenced to curve. Fteley and Stearns state, that this distance should be equal to $2\frac{1}{2}$ times the height of the weir above the bed of the stream.

For the present, let it be assumed that at the point where H is measured the water is at rest. In actual cases the water will always have some velocity, and the effect of this velocity will have to be considered later. H may be called the still water head over the weir, and in all the formulae following it has this meaning.

Side contraction. According to Fteley and Stearns the amount by which the stream is contracted when the weir is sharp-edged is from 0·06 to 0·12H at each side, and Francis obtained a mean of 0·1H. A wide weir may be divided into several bays by partitions, and there may then be more than two contractions, at each of which the effective width of the weir will be diminished, if Francis' value be taken, by 0·1H.

If L is the total width of a rectangular weir and N the number of contractions, the effective width l, Fig. 70, is then,

$$(L - 0{\cdot}1NH).$$

When L is very long the lateral contraction may be neglected.

Suppression of the contraction. The side contraction can be completely suppressed by making the approaching channel with vertical sides and of the same width as the weir, as was done for the orifice shown in Fig. 47. The width of the stream is then equal to the width of the sill.

61. Derivation of the weir formula from that of a large orifice.

If in the formula for large orifices, p. 64, h_0 is made equal to zero and for the effective width of the stream the length l is substituted for b, and k is unity, the formula becomes

$$Q = \tfrac{2}{3}\sqrt{2g}\,.\,l\,.\,h_1^{\frac{3}{2}} \quad \ldots\ldots\ldots\ldots\ldots\ldots\ldots (1).$$

If instead of h_1 the head H, Fig. 70, is substituted, and a coefficient C introduced,

$$Q = \tfrac{2}{3}\,C\sqrt{2g}\,.\,lH^{\frac{3}{2}}.$$

The actual width l is retained instead of L, to make allowance for the end contraction which as explained above is equal to 0·1H for each contraction. If the width of the approaching channel is made equal to the width of the weir l is equal to L.

With N contractions $l = (L - 0{\cdot}1NH)$,

and $$Q = \tfrac{2}{3}C\sqrt{2g}\,.\,(L - 0{\cdot}1NH)\,H^{\frac{3}{2}}.$$

If C is given a mean value of 0·625, and L and H are in feet, the discharge in *cubic feet per second* is

$$Q = 3{\cdot}33\,(L - 0{\cdot}1NH)\,H^{\frac{3}{2}} \ldots\ldots\ldots\ldots\ldots\ldots (2).$$

This is the well-known formula deduced by Francis* from a careful series of experiments on sharp-edged weirs.

The formula, as an empirical one, is approximately correct and gives reliable values for the discharge.

The method of obtaining it from that for large orifices is, however, open to very serious objection, as the velocity at F on the section EF, Fig. 70, is clearly not equal to zero, neither is the direction of flow at the surface perpendicular to the section EF, and the pressure on EF, as will be understood later (section 83) is not likely to be constant.

That the directions and the velocities of the stream lines are different from those through a section taken near a sharp-edged orifice is seen by comparing the thickness of the jet in the two cases with the coefficient of discharge.

For the sharp-edged orifice with side contractions suppressed, the ratio of the thickness of the jet to the depth of the orifice is not very different from the coefficient of discharge, being about 0·625, but the thickness EF of the nappe of the weir is very nearly 0·78H, whereas the coefficient of discharge is practically 0·625, and the thickness is therefore 1·24 times the coefficient of discharge.

It appears therefore, that although the assumptions made in calculating the flow through an orifice may be justifiable, providing the head above the top of the orifice is not very small, yet when it approaches zero, the assumptions are not approximately true.

The angles which the stream lines make with the plane of EF cannot be very different from 90 degrees, so that it would appear, that the error principally arises from the assumption that the pressure throughout the section is uniform.

Bazin for special cases has carefully measured the fall of the point F and the thickness EF, and if the assumptions of constant pressure and stream lines perpendicular to EF are made, the discharge through EF can be calculated.

For example, the height of the point E above the sill of the weir for one of Bazin's experiments was 0·112H and the thickness EF was 0·78H. The fall of the point F is, therefore, 0·108H. Assuming constant pressure in the section, the discharge per foot width of the weir is, then,

$$q = \int_{0\cdot108H}^{0\cdot888H} \sqrt{2gh}\,dh$$

$$= \tfrac{2}{3}\sqrt{2g}\,.\,H^{\frac{3}{2}}\{(\cdot888)^{\frac{3}{2}} - (\cdot108)^{\frac{3}{2}}\}$$

$$= \cdot532\sqrt{2g}\,.\,H^{\frac{3}{2}}.$$

* Lowell, *Hydraulic Experiments*, New York, 1858.

The actual discharge per foot width, by experiment, was

$$q = 0{\cdot}433\sqrt{2g}\,.\,H^{\frac{3}{2}},$$

so that the calculation gives the discharge 1·228 greater than the actual, which is approximately the ratio of the thickness EF to the thickness of the stream from a sharp-edged orifice having a depth H. The assumption of constant pressure is, therefore, quite erroneous.

62. Thomson's principle of similarity.

"When a frictionless liquid flows out of similar and similarly placed orifices in similar vessels in which the same kind of liquid is at similar heights, the stream lines in the different flows are similar in form, the velocities at similar points are proportional to the square roots of the linear dimensions, and since the areas of the stream lines are proportional to the squares of the linear dimensions, the discharges are proportional to the linear dimensions raised to the power of $\frac{5}{2}$*."

Let A and B, Figs. 71 and 72, be exactly similar vessels with similar orifices, and let all the dimensions of A be n times those of B. Let c and c_1 be similarly situated areas on similar stream lines.

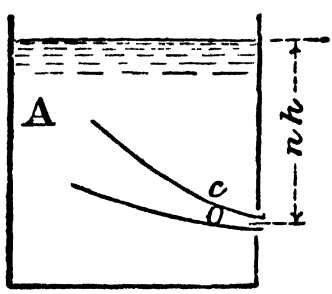

Fig. 71.

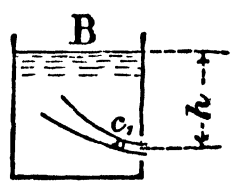

Fig. 72.

Then, since the dimensions of A are n times those of B, the fall of free level at c is n times that at c_1. Let v be the velocity at c and v_1 at c_1.

Then, since it has been shown (page 51) that the velocity in any stream line is proportional to the square root of the fall of free level,

$$\therefore\ v : v_1 :: \sqrt{n} : 1.$$

Again the area at c is n^2 times the area at c_1 and, therefore,

$$\frac{\text{the discharge through } c}{\text{the discharge through } c_1} = n^2\sqrt{n} = n^{\frac{5}{2}},$$

which proves the principle.

* British Association Reports 1858, 1876 and 1885.

63. Discharge through a triangular notch by the principle of similarity.

Let ADC, Figs. 73 and 74, be a triangular notch.

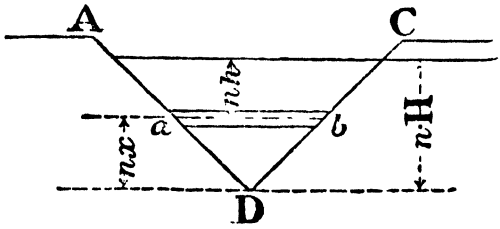

Fig. 73.

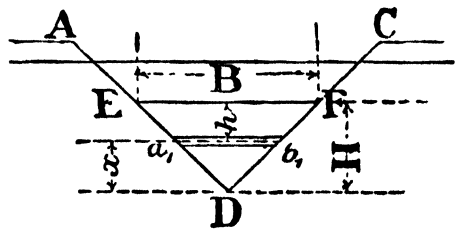

Fig. 74.

Let the depth of the flow through the notch at one time be H and at another n . H.

Suppose the area of the stream in the two cases to be divided into the same number of horizontal elements, such as ab and a_1b_1.

Then clearly the thickness of ab will be n times the thickness of a_1b_1.

Let a_1b_1 be at a distance x from the apex B, and ab at a distance nx; then the width of ab is clearly n times the width of a_1b_1, and the area of ab will therefore be n^2 times the area of a_1b_1.

Again, the head above ab is n times the head above a_1b_1 and therefore the velocity through ab will be $\sqrt{n}$ times the velocity through a_1b_1 and the discharge through ab will be $n^{\frac{5}{2}}$ times that through a_1b_1.

More generally Thomson expresses this as follows:

"If two triangular notches, similar in form, have water flowing through them at different depths, but with similar passages of approach, the cross sections of the jets at the notches may be similarly divided into the same number of elements of area, and the areas of corresponding elements will be proportional to the squares of the lineal dimensions of the cross sections, or proportional to the squares of the heads."

As the depth h of each element can be expressed as a fraction of the head H, the velocities through these elements are proportional to the square root of the head, and, therefore, the discharge is proportional to $H^{\frac{5}{2}}$.

Therefore $$Q \propto H^{\frac{5}{2}},$$

or $$Q = C \,.\, H^{\frac{5}{2}},$$

C being a coefficient which has to be determined by experiment.

From experiments with a sharp-edged notch having an angle at the vertex of 90 degrees, he found C to be practically constant for all heads and equal to 2·535. Then, H being measured in feet, the discharge in *cubic feet per second* is

$$Q = 2{\cdot}535 \,.\, H^{\frac{5}{2}} \quad \ldots\ldots\ldots\ldots\ldots\ldots\ldots\ldots (3).$$

64. Flow through a triangular notch.

The flow through a triangular notch is frequently given as

$$Q = \tfrac{4}{15} n \sqrt{2g} . BH^{\frac{5}{2}},$$

in which B is the top width of the notch and n an experimental coefficient.

It is deduced as follows:

Let ADC, Fig. 74, be the triangular notch, H being the still water head over the apex, and B the width at a height H above the apex. At any depth h the width b of the strip a_1b_1 is $\frac{B(H-h)}{H}$.

If the velocity through this strip is assumed to be $v = k\sqrt{2gh}$, the width of the stream through a_1b_1, $\frac{c . B(H-h)}{H}$, and the thickness ∂h, the discharge through it is

$$\partial Q = \frac{k . c . B(H-h)}{H} \sqrt{2gh}\, \partial h.$$

The section of the jet just outside the orifice is really less than the area EFD. The width of the stream through any strip a_1b_1 is less than a_1b_1, the surface is lower than EF, and the apex of the jet is some distance above D.

The diminution of the width of a_1b_1 has been allowed for by the coefficient c, and the diminution of depth might approximately be allowed for by integrating between $h=0$ and $h=H$, and introducing a third coefficient c_1.

Then
$$Q = kcc_1 \int_0^H \frac{B(H-h)}{H} \sqrt{2gh}\, dh$$
$$= \tfrac{4}{15} cc_1 k \sqrt{2g} . B . H^{\frac{5}{2}}.$$

Replacing cc_1k by n

$$Q = \tfrac{4}{15} . n \sqrt{2g} . BH^{\frac{5}{2}} \quad \text{.....(4).}$$

Calling the angle ADC, θ,

$$B = 2H \tan \frac{\theta}{2},$$

and
$$Q = \tfrac{8}{15} n \sqrt{2g} . \tan \frac{\theta}{2} . H^{\frac{5}{2}}.$$

When θ is 90 degrees, B is equal to 2H, and

$$Q = \tfrac{8}{15} n \sqrt{2g} . H^{\frac{5}{2}}.$$

Taking a mean value for n of 0·5926

$$Q = 2{\cdot}535 \; H^{\frac{5}{2}} \text{ for a right-angled notch,}$$

and
$$Q = 1{\cdot}464 H^{\frac{5}{2}} \text{ for a 60 degrees notch,}$$

which agrees with Thomson's formula for a right-angled notch.

The result is the same as obtained by the method of similarity, but the method of reasoning is open to very serious objection, as at no section of the jet are all the stream lines normal to the section, and k cannot therefore be constant. The assumption that the velocity through any strip is proportional to $\sqrt{h}$ is also open to objection, as the pressure throughout the section can hardly be uniform.

65. Discharge through a rectangular weir by the principle of similarity.

The discharge through a rectangular weir can also be obtained by the principle of similarity.

Consider two rectangular weirs each of length L, Figs. 75 and 76, and let the head over the sill be H in the one case and H_1, or nH, in the other. Assume the approaching channel to be of such a form that it does not materially alter the flow in either case.

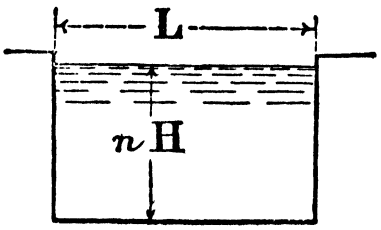

Fig. 75.

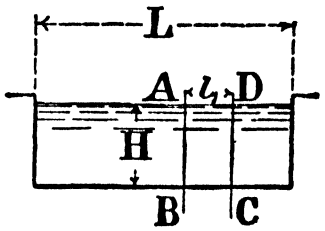

Fig. 76.

To simplify the problem let the weirs be fitted with sides projecting up stream so that there is no side contraction.

Then, if each of the weirs be divided into any number of equal parts the flow through each of these parts in any one of the weirs will be the same.

Suppose the first weir to be divided into N equal parts. If then, the second weir is divided into $\frac{N.H}{H_1}$ equal parts, the parts in the second weir will be exactly similar to those of the first.

By the principle of similarity, the discharge through each of the parts in the first weir will be to the discharge in the second as $\frac{H^{\frac{5}{2}}}{H_1^{\frac{5}{2}}}$, and the total discharge through the first weir is to the discharge through the second as

$$\frac{N.H^{\frac{5}{2}}}{\frac{N.H.H_1^{\frac{3}{2}}}{H_1}} = \frac{H^{\frac{3}{2}}}{H_1^{\frac{3}{2}}} = \frac{1}{n^{\frac{3}{2}}}.$$

Instead of two separate weirs the two cases may refer to the same weir, and the discharge for any head H is, therefore, proportional to* $H^{\frac{3}{2}}$; and since the flow is proportional to L

$$Q = C.L.H^{\frac{3}{2}},$$

in which C is a coefficient which should be constant.

66. Rectangular weir with end contractions.

If the width of the channel as it approaches the weir is greater than the width of the weir, contraction takes place at each side, and the effectual width of the stream or nappe is diminished; the amount by which the stream is contracted at each side is practically independent of the width and is a constant fraction of H, as explained above, or is equal to kH, k being about 0·1.

* See Example 3, page 260.

Let the total width of each weir be now divided into three parts, the width of each end part being equal to $n.k.H$. The width of the end parts of the transverse section of the stream will each be $(n-1)\,k\,.\,H$, and the width of central part $L-2nkH$.

The flow through the central part of the weir will be equal to

$$Q_1 = C\,(L-2nkH)\,H^{\frac{3}{2}}.$$

Now, whatever the head on the weir, the end pieces of the stream, since the width is $(n-1)\,kH$ and k is a constant, will be similar figures, and, therefore, the flow through them can be expressed as

$$Q_2 = 2C_1\,(n-1)\,kHH^{\frac{3}{2}}.$$

The total flow is, therefore,

$$Q = C\,(L-2nkH)\,H^{\frac{3}{2}} + 2C_1\,(n-1)\,kH\,H^{\frac{3}{2}}.$$

If now C_1 is assumed equal to C

$$Q = C\,(L-2kH)\,H^{\frac{3}{2}}.$$

If instead of two there are N contractions, due to the weir being divided into several bays by posts or partitions, the formula becomes

$$Q = C\,(L-N\,0{\cdot}1\,.\,H)\,H^{\frac{3}{2}}.$$

This is Francis' formula, and by Thomson's theory it is thus shown to be rational.

67. Bazin's* formula for the discharge of a weir.

The discharge through a weir with no side contraction may be written

$$Q = m\sqrt{2g}\,.\,LH^{\frac{3}{2}},$$

or

$$Q = mL\sqrt{2gH}\,.\,H,$$

the coefficient m being equal to $\dfrac{C}{\sqrt{2g}}$.

Taking Francis' value for C as 3·33, m is then 0·415.

From experiments on sharp-crested weirs with no side contraction Bazin deduced for m† the value

$$m = 0{\cdot}405 + \frac{{\cdot}00984}{H}.$$

In Table IX, and Fig. 77, are shown Bazin's values for m for different heads, and also those obtained by Rafter at Cornell upon a weir similar to that used by Bazin, the maximum head in the Cornell experiments being much greater than that in Bazin's experiments. In Fig. 77 are also shown several values of m, as calculated by the author, from Francis' experimental data.

* *Annales des Ponts et Chaussées*, 1888—1898.

† "Experiments on flow over Weirs," *Am.S.C.E.* Vol. XXVII,

TABLE IX.

Values of the coefficient m in the formula $Q = mL\sqrt{2g}\,H^{\frac{3}{2}}$.

Weir, sharp-crested, 6·56 feet wide with free overfall and lateral contraction suppressed, H being the still water head over the weir, or the measured head h* corrected for velocity of approach.

Bazin.

Head in feet	0·164	0·328	0·656	0·984	1·312	1·64	1·968
m	0·448	0·432	0·421	0·417	0·414	0·412	0·409

or $$m = 0{\cdot}405 + \frac{0{\cdot}00984}{H}.$$

Rafter.

Head in feet	m	C
0·1	0·4286	3·437
0·5	0·4230	3·392
1·0	0·4174	3·348
1·5	0·4136	3·317
2·0	0·4106	3·293
2·5	0·4094	3·283
3·0	0·4094	3·283
3·5	0·4099	3·288
4·0	0·4112	3·298
4·5	0·4125	3·308
5·0	0·4133	3·315
5·5	0·4135	3·316
6·0	0·4136	3·317

68. Bazin's and the Cornell experiments on weirs.

Bazin's experiments were made on a weir† 6·56 feet long having the approaching channel the same width as the weir, so that the lateral contractions were suppressed, and the discharge was measured by noting the time taken to fill a concrete trench of known capacity.

The head over the weir was measured by means of the hook gauge, page 249. Side chambers were constructed and connected to the channel by means of circular pipes 0·1 m. diameter.

The water in the chambers was very steady, and its level could therefore be accurately gauged. The gauges were placed 5 metres from the weir. The maximum head over the weir in Bazin's experiments was however only 2 feet.

The experiments for higher heads at Cornell University were made on a weir of practically the same width as Bazin's, 6·53 feet, the other conditions being made as nearly the same as possible; the maximum head on the weir was 6 feet.

* See page 90

† *Annales des Ponts et Chaussées*, p. 445, Vol. II. 1891.

The results of these experiments, Fig. 77, show that the coefficient m diminishes and then increases, having a minimum value when H is between 2·5 feet and 3 feet.

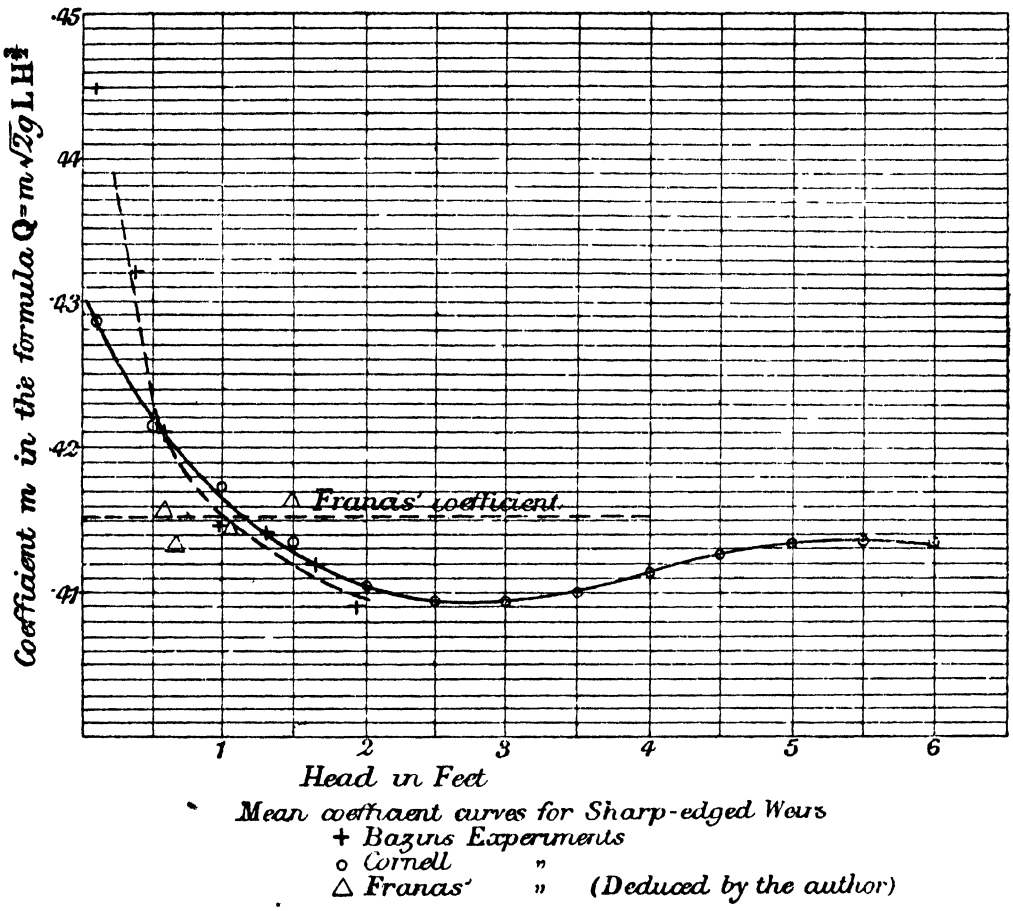

Fig. 77.

It is doubtful, however, although the experiments were made with great care and skill, whether at high heads the deduced coefficients are absolutely reliable.

To measure the head over the weir a 1 inch galvanised pipe with holes ¼ inch diameter and opening downwards, 6 inches apart, was laid across the channel. To this pipe were connected ¾ inch pipes passing through the weir to a convenient point below the weir where they could be connected to the gauges by rubber tubing. The gauges were glass tubes ¾ inch diameter mounted on a frame, the height of the water being read on a scale graduated to 2 mm. spaces.

69. Velocity of approach.

It should be clearly understood that in the formula given, it has been assumed in giving values to the coefficient m, that H is the height above the sill of the weir of the still water surface.

In actual cases the water where the head is measured will have some velocity, and due to this, the discharge over the weir will be increased.

If Q is the actual discharge over a weir, and A is the area of the up-stream channel approaching the weir, the mean velocity in the channel is $v = \frac{Q}{A}$.

There have been a number of methods suggested to take into account this velocity of approach, the best perhaps being that adopted by Hamilton Smith, and Bazin.

This consists in considering the equivalent still water head H, over the weir, as equal to

$$h + \frac{a \cdot v^2}{2g},$$

a being a coefficient determined by experiment, and h the measured head.

The discharge is then

$$Q = m\sqrt{2g}\,L\left(h + \frac{av^2}{2g}\right)^{\frac{3}{2}} \quad \text{.....(5)},$$

or

$$Q = m \cdot L\left(h + \frac{av^2}{2g}\right)\sqrt{2g\left(h + \frac{av^2}{2g}\right)}.$$

Expanding (5), and remembering that $\frac{av^2}{2gh}$ is generally a small quantity,

$$Q = mLh\sqrt{2gh}\left(1 + \frac{3}{2}\frac{av^2}{2gh}\right).$$

The velocity v depends upon the discharge Q to be determined and is equal to $\frac{Q}{A}$.

Therefore $$Q = mLh\sqrt{2gh}\left(1 + \frac{3}{2}\frac{aQ^2}{2ghA^2}\right) \quad \text{.....(6)}.$$

From five sets of experiments, the height of the weir above the bottom of the channel being different for each set, Bazin found the mean value of a to be 1·66.

This form of the formula, however, is not convenient for use, since the unknown Q appears upon both sides of the equation.

If, however, the discharge Q is expressed as

$$Q = nL\sqrt{2gh} \cdot h,$$

the coefficient n for any weir can be found by measuring Q and h.

It will clearly be different from the coefficient m, since for m to be used h has to be corrected.

From his experimental results Bazin calculated n for various heads, some of which are shown in Table X.

Substituting this value of Q in the above formula,

$$Q = mLh\sqrt{2gh}\left(1 + \frac{3}{2}\cdot\frac{a\,.\,n^2L^2h^3}{A^2h}\right) \quad \text{.....(7).}$$

Let $\frac{3}{2}an^2$ be called k.

Then $$Q = mLh\sqrt{2gh}\left(1 + \frac{kL^2h^2}{A^2}\right).$$

Or, when the width of channel of approach is equal to the width of the weir, and the height of the sill, Fig. 78, is p feet above the bed of the channel, and h the measured head,

$$A = (h + p)\,L,$$

and $$Q = mLh\sqrt{2gh}\left(1 + \frac{kh^2}{(h+p)^2}\right) \quad \text{.....(8).}$$

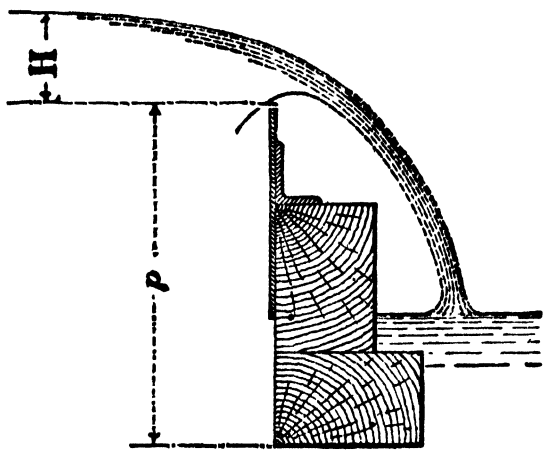

Fig. 78.

The mean value given to the coefficient k by Bazin is 0·55, so that

$$Q = mLh\sqrt{2gh}\left(1 + \frac{0{\cdot}55\,h^2}{(h+p)^2}\right) \quad \text{.....(9).}$$

This may be written

$$Q = m_1Lh\sqrt{2gh},$$

in which $$m_1 = m\left(1 + \frac{{\cdot}55h^2}{(h+p)^2}\right).$$

Substituting for m the value given on page 88,

$$m_1 = \left({\cdot}405 + \frac{{\cdot}00984}{h}\right)\left(1 + \frac{{\cdot}55h^2}{(h+p)^2}\right) \quad \text{.....(10);}$$

m_1 may be called the absolute coefficient of discharge.

The coefficient given in the Tables.

It should be clearly understood that in determining the values of m as given in the Tables and in Fig. 77 the measured head h was corrected for velocity of approach, and in using this

coefficient to determine Q, h must first be corrected, or Q calculated from formula 9.

Rafter in determining the values of m from the Cornell experiments, increased the observed head h by $\frac{v^2}{2g}$ only, instead of by $1{\cdot}66\,\frac{v^2}{2g}$.

Fteley and Stearns*, from their researches on the flow over weirs, found the correction necessary for velocity of approach to be from

$$1{\cdot}45 \text{ to } 1{\cdot}5\,\frac{v^2}{2g}.$$

Hamilton Smith† adopts for weirs with end contractions suppressed the values

$$1{\cdot}33 \text{ to } 1{\cdot}40\,\frac{v^2}{2g},$$

and for a weir with two end contractions,

$$1{\cdot}1 \text{ to } 1{\cdot}25\,\frac{v^2}{2g}.$$

TABLE X.

Coefficients n and m as calculated by Bazin from the formulae

$$Q = nL\sqrt{2g}\,h^{\frac{3}{2}}$$

and

$$Q = mL\sqrt{2g}\,H^{\frac{3}{2}},$$

h being the head actually measured and H the head corrected for velocity of approach.

Head h in feet	Height of sill p in feet	Coefficient n	Coefficient m
0·164	0·656	0·458	0·448
	6·560	0·448	
0·984	0·656	0·500	0·417
	6·560	0·421	
1·640	0·656	0·500	0·4118
	6·560	0·421	

An example is now taken illustrating the method of deducing the coefficients n and m from the result of an experiment, and the difference between them for a special case.

Example. In one of Bazin's experiments the width of the weir and the approaching channel were both 6·56 feet. The depth of the channel approaching the weir measured at a point 2 metres up stream from the weir was 7·544 feet and the head measured over the weir, which may be denoted by h, was 0·984 feet. The measured discharge was 21·8 cubic ft. per second.

* *Transactions Am.S.C.E.*, Vol. XII.
† *Hydraulics.*

The velocity at the section where h was measured, and which may be called the velocity of approach was, therefore,

$$v=\frac{Q}{7\cdot544\times6\cdot56'}=\frac{21\cdot8}{7\cdot544\times6\cdot56}$$
$$=0\cdot44 \text{ feet per second.}$$

If now the formula for discharge be written

$$Q=nL\sqrt{2gh}\,.\,h,$$

and n is calculated from this formula by substituting the known values of Q, L and h

$$n=0\cdot421.$$

Correcting h for velocity of approach,

$$H=h+1\cdot66\,\frac{(\cdot44)^2}{2g}$$
$$=\cdot9888.$$

Then $$Q=mL\sqrt{2gH}\,.\,H,$$

from which $$m=\frac{21\cdot8}{6\cdot56\sqrt{2g}\,.\cdot9888}=0\cdot415.$$

It will seem from Table X that when the height p of the sill of the weir above the stream bed is small compared with the head, the difference may be much larger than for this example.

When the head is 1·64 feet and larger than p, the coefficient n is eighteen per cent. greater than m. In such cases failure to correct the coefficient will lead to considerable inaccuracy.

70. Influence of the height of the weir sill above the bed of the stream on the contraction.

The nearer the sill is to the bottom of the stream, the less the contraction at the sill, and if the depth is small compared with H, the diminution on the contraction may considerably affect the flow.

When the sill was 1·15 feet above the bottom of a channel, of the same width as the weir, Bazin found the ratio $\frac{e}{H}$ (Fig. 85) to be 0·097, and when it was 3·70 feet, to be 0·112. For greater heights than these the mean value of $\frac{e}{H}$ was 0·13.

71. Discharge of a weir when the air is not freely admitted beneath the nappe. Form of the nappe.

Francis in the Lowell experiments, found that, by making the width of the channel below the weir equal to the width of the weir, and thus preventing free access of air to the underside of the nappe, the discharge was increased. Bazin*, in the experiments already referred to, has investigated very fully the effect upon the discharge and upon the form of the nappe, of restricting the free passage of the air below the nappe. He finds, that when the flow is sufficient to prevent the air getting under the nappe, it may assume one of three distinct forms, and that the discharge for

* *Annales des Ponts et Chaussées*, 1891 and 1898.

one of them may be 28 per cent. greater than when the air is freely admitted, or the nappe is "free." Which of these three forms the nappe assumes and the amount by which the discharge is greater than for the "free nappe," depends largely upon the head over the weir, and also upon the height of the weir above the water in the down-stream channel.

The phenomenon is, however, very complex, the form of the nappe for any head depending to a very large extent upon whether the head has been decreasing, or increasing, and for a given head may possibly have any one of the three forms, so that the discharge is very uncertain. M. Bazin distinguishes the forms of nappe as follows:

(1) Free nappe. Air under nappe at atmospheric pressure, Figs. 70 and 78.

(2) Depressed nappe enclosing a limited volume of air at a pressure less than that of the atmosphere, Fig. 79.

(3) Adhering nappe. No air enclosed and the nappe adhering to the down-stream face of the weir, Fig. 80. The nappe in this case may take any one of several forms.

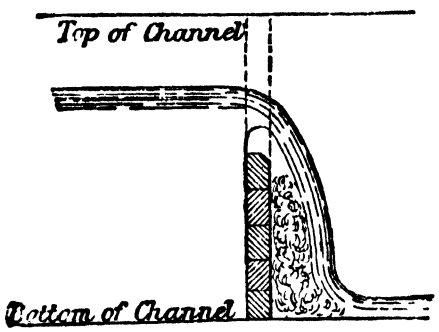

Fig. 79.

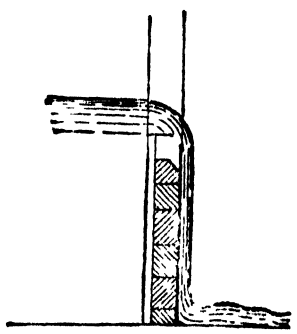

Fig. 80.

(4) Drowned or wetted nappe, Fig. 81. No air enclosed but the nappe encloses a mass of turbulent water which does not move with the nappe, and which is said to wet the nappe.

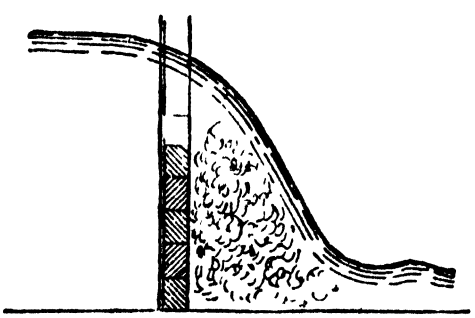

Fig. 81.

72. Depressed nappe.

The air below the nappe being at less than the atmospheric pressure the excess pressure on the top of the nappe causes it to be depressed. There is also a rise of water in the down-stream channel under the nappe.

The discharge is slightly greater than for a free nappe. On a weir 2·46 feet above the bottom of the up-stream channel, the nappe was depressed for heads below 0·77 feet, and at this head the coefficient of discharge was 1·08 m_1, m_1 being the absolute coefficient for the free nappe.

73. Adhering nappes.

As the head for this weir approached 0·77 feet the air was rapidly expelled, and the nappe became vertical as in Fig. 80, its surface having a corrugated appearance. The coefficient of discharge changed from 1·08 m_1 to 1·28 m_1. This large change in the coefficient of discharge caused the head over the weir to fall to 0·69 feet, but the nappe still adhered to the weir.

74. Drowned or wetted nappes.

As the head was further increased, and approached 0·97 feet, the nappe came away from the weir face, assuming the drowned form, and the coefficient suddenly fell to 1·19 m_1. As the head was further increased the coefficient diminished, becoming 1·12 when the head was above 1·3 feet.

The drowned nappes are more stable than the other two, but whereas for the depressed and adhering nappes the discharge is not affected by the depth of water in the down-stream channel, the height of the water may influence the flow of the drowned nappe. If when the drowned nappe falls into the down stream the rise of the water takes place at a distance from the foot of the nappe, Fig. 81, the height of the down-stream water does not affect the flow. On the other hand if the rise encloses the foot of the nappe, Fig. 82, the discharge is affected. Let h_2 be the difference

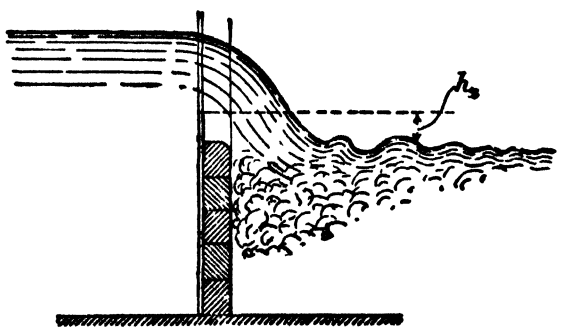

Fig. 82.

of level of the sill of the weir and the water below the weir. The coefficient of discharge in the first case is independent of h_2 but is dependent upon p the height of the sill above the bed of the upstream channel, and is

$$m_0 = m_1\left(0{\cdot}878 + 0{\cdot}128\,\frac{p}{h}\right) \quad \text{.....(11).}$$

Bazin found that the drowned nappe could not be formed if h is less than $0{\cdot}4\,p$ and, therefore, $\frac{p}{h}$ cannot be greater than $2{\cdot}5$.

Substituting for m_1 its value

$$\left(0{\cdot}405 + \frac{{\cdot}00984}{h}\right)\left(1 + \frac{{\cdot}55h^2}{(h+p)^2}\right),$$

from (10) page 92

$$m_0 = 0{\cdot}470 + 0{\cdot}0075\,\frac{p^2}{h^2} \quad \text{.....(12).}$$

In the second case the coefficient depends upon h_2, and is,

$$m_0 = m_1\left(1{\cdot}06 + 0{\cdot}16\right)\left(\frac{h_2}{p} - 0{\cdot}05\right)\frac{p}{h} \quad \text{.....(13),}$$

for which, with a sufficient degree of approximation, may be substituted the simpler formula,

$$m_0 = m_1\left(1{\cdot}05 + 1{\cdot}15\,\frac{h_2}{h}\right) \quad \text{.....(14).}$$

The limiting value of m_0 is $1{\cdot}2\,m_1$, for if h_2 becomes greater than h the nappe is no longer drowned.

Further, the rise can only enclose the foot of the nappe when h_2 is less than $(\frac{3}{4}\,p - h)$. As h_2 passes this value the rise is pushed down stream away from the foot of the nappe and the coefficient changes to that of the preceding case.

75. Instability of the form of the nappe.

The head at which the form of nappe changes depends upon whether the head is increasing or diminishing, and the depressed and adhering nappes are very unstable, an accidental admission of air or other interference causing rapid change in their form. Further, the adhering nappe is only formed under special circumstances, and as the air is expelled the depressed nappe generally passes directly to the drowned form.

If, therefore, the air is not freely admitted below the nappe the form for any given head is very uncertain and the discharge cannot be obtained with any great degree of assurance.

With the weir 2·46 feet above the bed of the channel and 6·56 feet long Bazin obtained for the same head of 0·656 feet, the four kinds of nappe, the coefficients of discharge being as follows:

Free nappe,	0·433
Depressed nappe,	0·460
Drowned nappe, level of water down stream 0·41 feet below the crest of the weir,	0·497
Nappe adhering to down-stream face,	0·554

The discharge for this weir while the head was kept constant, thus varied 26 per cent.

76. Drowned weirs with sharp crests*.

When the surface of the water down stream is higher than the sill of the weir, as in Fig. 83, the weir is said to be drowned.

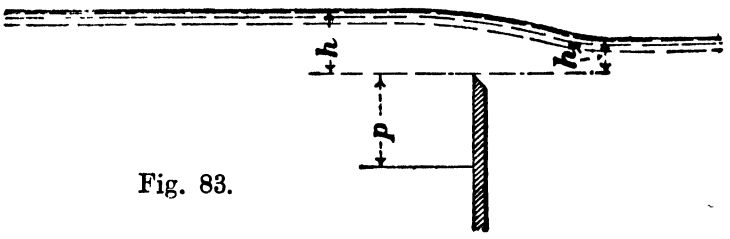

Fig. 83.

Bazin gives a formula for deducing the coefficients for such a weir from those for the sharp-edged weirs with a free nappe, which in its simplest form is,

$$m_0 = m_1\left[1{\cdot}05\left(1+\frac{1}{5}\frac{h_2}{p}\right)\sqrt[3]{\frac{h-h_2}{h}}\right] \quad \text{.....(15)},$$

h_2 being the height of the down-stream water above the sill of the weir, h the head actually measured above the weir, p the height of the sill above the up-stream channel, and m_1 the coefficient ((10), p. 92) for a sharp-edged weir. This expression gives the same value within 1 or 2 per cent. as the formulae (13) and (14).

Example. The head over a weir is 1 foot, and the height of the sill above the up-stream channel is 5 feet. The length is 8 feet and the surface of the water in the down-stream channel is 6 inches above the sill. Find the discharge.

From formula (10), page 92, the coefficient m_1 for a sharp-edged weir with free nappe is

$$m_1 = \left({\cdot}405+\frac{0{\cdot}00984}{h}\right)\left\{1+0{\cdot}55\left(\frac{h}{h+p}\right)^2\right\} = {\cdot}4215.$$

* Attempts have been made to express the discharge over a drowned weir as equivalent to that through a drowned orifice of an area equal to Lh_2, under a head $h-h_2$, together with a discharge over a weir of length L when the head is $h-h_2$.

The discharge is then

$$n\sqrt{2g}Lh_2(h-h_2)^{\frac{1}{2}}+m\sqrt{2g}L(h-h_2)^{\frac{3}{2}},$$

n and m being coefficients. Du Buat gave the formula

$$Q = 0{\cdot}41\left(h+\frac{h_2}{2}\right)\sqrt{2g(h-h_2)}$$

and Monsieur Mary $\quad Q = 0{\cdot}8h_2\sqrt{2g(h-h_2+\text{head due to velocity of stream})}.$

Therefore $m_0 = \cdot 4215\,[1\cdot 05\,(1 + \cdot 021)\,0\cdot 761]$
$= \cdot 3440.$

Then $Q = \cdot 344 \times 8\sqrt{2g}\,.\,1^{\frac{3}{2}}$
$= 22\cdot 08$ cubic ft. per second.

77. Vertical weirs of small thickness.

Instead of making the sill of a weir sharp-edged, it may have a flat sill of thickness c. This will frequently be the case in practice, the weir being constructed of timbers of uniform width placed one upon the other. The conditions of flow for these weirs may be very different from those of a sharp-edged weir.

The nappes of such weirs present two distinct forms, according as the water is in contact with the crest of the weir, or becomes detached at the up-stream edge and leaps over the crest without touching the down-stream edge. In the second case the discharge is the same as if the weir were sharp-edged. When the head h over the weir is more than $2c$ this condition is realised, and may obtain when h passes $\frac{3}{2}c$. Between these two values the nappe is in a condition of unstable equilibrium; when h is less than $\frac{3}{2}c$ the nappe adheres to the sill, and the coefficient of discharge is

$$m_0 = m_1\left(0\cdot 70 + 0\cdot 185\,\frac{h}{c}\right),$$

any external perturbation such as the entrance of air or the passage of a floating body causing the detachment.

If the nappe adheres between $\frac{3}{2}c$ and $2c$ the coefficient m_0 varies from $\cdot 98m_1$ to $1\cdot 07m_1$, but if it is free the coefficient $m_0 = m_1$. When $H = \frac{1}{2}c$, m_0 is $\cdot 79m_1$. If therefore the coefficients for a sharp-edged weir are used it is clear the error may be considerable.

The formula for m_0 gives approximately correct results when the width of the sill is great, from 3 to 7 feet for example.

If the up-stream edge of the weir is rounded the discharge is increased. The discharge* for a weir having a crest 6·56 feet wide, when the up-stream edge was rounded to a radius of 4 inches, was increased by 14 per cent., and that of a weir 2·624 feet wide by 12 per cent.

The rounding of the corners, due to wear, of timber weirs of ordinary dimensions, to a radius of 1 inch or less, will, therefore, affect the flow considerably.

78. Depressed and wetted nappes for flat-crested weirs.

The nappes of weirs having flat sills may be depressed, and may become drowned as for sharp-edged weirs.

* *Annales des Ponts et Chaussées*, Vol. II. 1896.

The coefficient of discharge for the depressed nappes, whether the nappe leaps over the crest or adheres to it, is practically the same as for the free nappes, being slightly less for low heads and becomes greater as the head increases. In this respect they differ from the sharp-crested weirs, the coefficients for which are always greater for the depressed nappes than for the free nappes.

79. Drowned nappes for flat-crested weirs.

As long as the nappe adheres to the sill the coefficient m may be taken the same as when the nappe is free, or

$$m_0 = m_1\left(0{\cdot}70 + \frac{0{\cdot}185h}{c}\right).$$

When the nappe is free from the sill and becomes drowned, the same formula

$$m_0 = m_1\left(0{\cdot}878 + 0{\cdot}128\frac{p}{h}\right),$$

as for sharp-crested weirs with drowned nappes, may be used. For a given limiting value of the head h these two formulae give the same value of m_0. When the head is less than this limiting value, the former formula should be used. It gives values of m slightly too small, but the error is never more than 3 to 4 per cent. When the head is greater than the limiting value, the second formula should be used. The error in this case may be as great as 8 per cent.

80. Wide flat-crested weirs.

When the sill is very wide the surface of the water falls towards the weir, but the stream lines, as they pass over the weir, are practically parallel to the top of the weir.

Let H be the height of the still water surface, and h the depth of the water over the weir, Fig. 84.

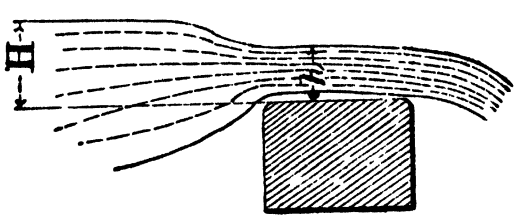

Fig. 84.

Then, assuming that the pressure on the top of the nappe is atmospheric, the velocity of any stream line is

$$v = \sqrt{2g\,(\mathrm{H} - h)},$$

and if L is the length of the weir, the discharge is

$$\mathrm{Q} = \sqrt{2g}\,\mathrm{L}h\sqrt{(\mathrm{H} - h)} \quad \ldots\ldots\ldots\ldots\ldots\ldots\ldots (16).$$

For the flow to be permanent (see page 106) Q must be a maximum for a given value of h, or $\frac{dQ}{dh}$ must equal zero.

Therefore

$$\frac{dQ}{dh} = \sqrt{2g}L\left\{\sqrt{(H-h)} - \frac{h}{2\sqrt{(H-h)}}\right\} = 0.$$

From which $\quad 2(H-h) - h = 0,$

and $\quad h = \frac{2}{3}H.$

Substituting for h in (16)

$$Q = \frac{2}{3\sqrt{3}}\sqrt{2g}\,.\,LH^{\frac{3}{2}}$$

$$= 0{\cdot}385L\sqrt{2gH}\,.\,H = 3{\cdot}08L\sqrt{H}\,.\,H.$$

The actual discharge will be a little less than this due to friction on the sill, etc.

Bazin found for a flat-crested weir 6·56 feet wide the coefficient m was 0·373, or $C = 2{\cdot}991$.

Lesbros' experiments on weirs sufficiently wide to approximate to the conditions assumed, gave ·35 for the value of the coefficient m.

In Table XI the coefficient C for such weirs varies from 2·66 to 3·10.

81. Flow over dams.

Weirs of various forms. M. Bazin has experimentally investigated the flow over weirs having (*a*) sharp crests and (*b*) flat crests, the up- and down-stream faces, instead of both being vertical, being

(1) vertical on the down-stream face and inclined on the up-stream face,

(2) vertical on the up-stream face and inclined on the down-stream face,

(3) inclined on both the up- and down-stream faces,

and (*c*) weirs of special sections.

The coefficients vary very considerably from those for sharp-crested vertical weirs, and also for the various kinds of weirs. Coefficients are given in Table XI for a few cases, to show the necessity of the care to be exercised in choosing the coefficient for any weir, and the errors that may ensue by careless evaluation of the coefficient of discharge.

For a full account of these experiments and the coefficients obtained, the reader is referred to Bazin's* original papers, or to Rafter's† paper, in which also will be found the results of experi-

* *Annales des Ponts et Chaussées*, 1898.

† *Transactions of the Am.S.C.E.*, Vol. XLIV., 1900.

TABLE XI.

Values of the coefficient C in the formula $Q = CL \cdot h^{\frac{3}{2}}$, for weirs of the sections shown, for various values of the observed head h.

Bazin.

Section of weir	Head in feet								
	0·3	0·5	1·0	1·3	2·0	3·0	4·0	5·0	6·0
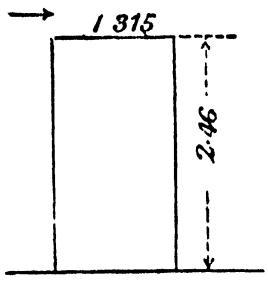	2·66	2·66	2·90	3·10					
	3·61	3·80	4·01	3·91					
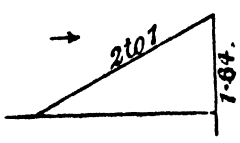	4·02	4·15	4·18	4·15					
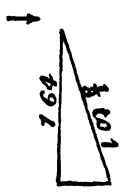	3·46	3·57	3·86	3·80					
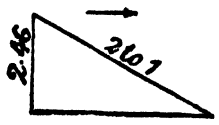	3·46	3·49	3·59	3·63					
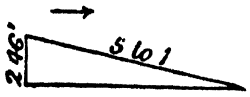	3·08	3·08	3·19	3·22					

TABLE XI (*continued*).

Bazin.

Section of weir	Head in feet								
	0 3	0 5	1·0	1 3	2·0	3·0	4 0	5·0	6·0
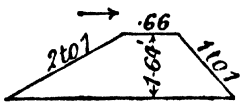	3·10	3·27	3·73	3·90					
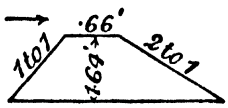	2·75	3·05	3·52	3·73					

Rafter.

Section of weir	Head in feet								
	0·3	0·5	1 0	1 3	2 0	3 0	4·0	5·0	6·0
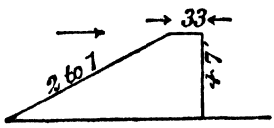		3·35	3·68	3·83	3·77	3·68	3·70	3·71	3·71
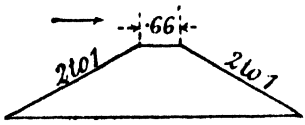		3·14	3·42	3·52	3·61	3·66	3·66	3·64	3·63
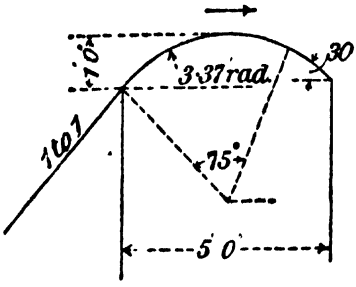		2·95	3·16	3·27	3·45	3·56	3·61	3·65	3·67

ments made at Cornell University on the discharge of weirs, similar to those used by Bazin and for heads higher than he used, and also weirs of sections approximating more closely to those of existing masonry dams, used as weirs. From Bazin's and Rafter's experiments, curves of discharge for varying heads for some of these actual weirs have been drawn up.

82. Form of weir for accurate gauging.

The uncertainty attaching itself to the correction to be applied to the measured head for velocity of approach, and the difficulty of making proper allowance for the imperfect contraction at the sides and at the sill, when the sill is near the bed of the channel and is not sharp-edged, and the instability of the nappe and uncertainty of the form for any given head when the admission of air below the nappe is imperfect, make it desirable that as far as possible, when accurate gaugings are required, the weir should comply with the following four conditions, as laid down by Bazin.

(1) The sill of the weir must be made as high as possible above the bed of the stream.

(2) Unless the weir is long compared with the head, the lateral contraction should be suppressed by making the channel approaching the weir with vertical sides and of the same width as the weir.

(3) The sill of the weir must be made sharp-crested.

(4) Free access of air to the sides and under the nappe of the weir must be ensured.

83. Boussinesq's* theory of the discharge over a weir.

As stated above, if air is freely admitted below the nappe of a weir there is a contraction of the stream at the sharp edge of the sill, and also due to the falling curved surface.

If the top of the sill is well removed from the bottom of the channel, the amount by which the arched under side of the nappe is raised above the sill of the weir is assumed by Boussinesq—and this assumption has been verified by Bazin's experiments—to be some fraction of the head H on the weir.

Let CD, Fig. 85, be the section of the vein at which the maximum rise of the bottom of the vein occurs above the sill, and let e be the height of D above S.

Let it be assumed that through the section CD the stream lines are moving in curved paths normal to the section, and that they have a common centre of curvature O.

* *Comptes Rendus*, 1887 and 1889.

Let H be the height of the surface of the water up stream above the sill. Let R be the radius of the stream line at any point E in CD at a height x above S, and R_1 and R_2 the radii of curvature at D and C respectively. Let V, V_1 and V_2 be the velocities at E, D, and C respectively.

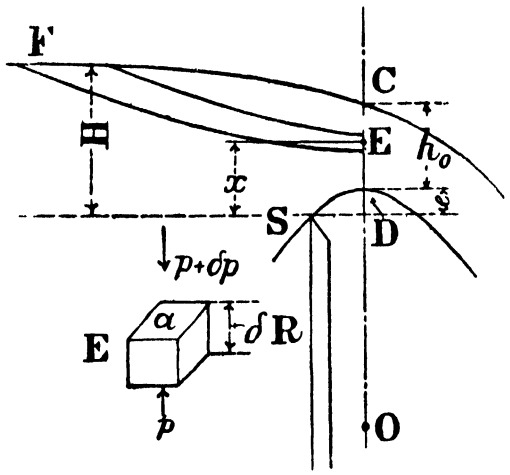

Fig. 85.

Consider the equilibrium of any element of fluid at the point E, the thickness of which is δR and the horizontal area is a. If w is the weight of unit volume, the weight of the element is $w \,.\, a\delta R$.

Since the element is moving in a circle of radius R the centrifugal force acting on the element is $wa\dfrac{V^2\delta R}{gR}$ lbs.

The force acting on the element due to gravity is $wa\delta R$ lbs.

Let p be the pressure per unit area on the lower face of the element and $p + \delta p$ on the upper face.

Then, equating the upward and downward forces,

$$(p + \delta p)\, a + wa\delta R = pa + \frac{waV^2\delta R}{gR}.$$

From which $$\frac{1}{w}\frac{dp}{dR} = -1 + \frac{V^2}{gR} \quad \text{.....(1).}$$

Assuming now that Bernouilli's theorem is applicable to the stream line at EF,

$$x + \frac{p}{w} + \frac{V^2}{2g} = H.$$

Differentiating, and remembering H is constant,

$$dx + \frac{dp}{w} + \frac{VdV}{g} = 0,$$

$$\frac{1}{w}\frac{dp}{dx} = -1 - \frac{VdV}{g\,.\,dx}.$$

And since $$\frac{dp}{dx} = \frac{dp}{dR},$$

therefore $$\frac{V^2}{R} = -\frac{VdV}{dR},$$

or $$RdV + VdR = 0.$$

Integrating, $$VR = \text{constant}.$$

Therefore $$VR = V_1R_1 = V_2R_2.$$

At the upper and lower surfaces of the vein the pressure is atmospheric, and therefore,

$$V_1 = \sqrt{2g\,(H-e)},$$
$$V_2 = \sqrt{2g\,(H-h_0-e)}.$$

Since $VR = V_1R_1$, and R from the figure is $(R_1 + x - e)$, therefore,

$$V = \sqrt{2g\,(H-e)}\,\frac{R_1}{R_1 + x - e} \quad \text{.....(2).}$$

The total flow over the weir is

$$Q = \int_e^{h_0+e} \sqrt{2g\,.\,(H-e)}\left(\frac{R_1}{R_1 + x - e}\right) dx$$
$$= \sqrt{2g\,(H-e)}\,R_1 \int_e^{h_0+e} \frac{dx}{R_1 + x - e}$$
$$= \sqrt{2g\,(H-e)}\,R_1 \log\frac{R_1 + h_0}{R_1} \quad \text{.....(3).}$$

Now if the flow over the weir is permanent, the thickness h_0 of the nappe must adjust itself, so that for the given head H the discharge is the maximum possible.

The maximum flow however can only take place if each filament at the section GF has the maximum velocity possible to the conditions, otherwise the filaments will be accelerated; and for a given discharge the thickness h_0 is therefore a minimum, or for a given value of h_0 the discharge is a maximum. That is, when Q is a maximum, $\frac{dQ}{dh_0} = 0$.

If therefore R_1 can be written as a function of h_0, the value of h_0, which makes Q a maximum, can be determined by differentiating (3) and equating $\frac{dQ}{dh_0}$ to zero.

Let $$n = \frac{R_1}{R_2} = \frac{V_2}{V_1}.$$

Then, since $$R_2 = R_1 + h_0,$$
$$R_1 = \frac{nh_0}{1-n},$$

and $$n^2 = \frac{V_2^2}{V_1^2} = \frac{H-e-h_0}{H-e}.$$

Therefore, $h_0 = (H - e)(1 - n^2)$,

and $R_1 = n(1 + n)(H - e)$.

Substituting this value of R_1 in the expression for Q,

$$Q = \sqrt{2g} \,.\, (H - e)^{\frac{3}{2}} (n + n^2) \log \frac{1}{n},$$

which, since Q is a maximum when $\frac{dQ}{dh} = 0$, and h is a function of n, is a maximum when $\frac{dQ}{dn} = 0$.

Differentiating and equating to zero,

$$(1 + 2n) \log \frac{1}{n} - (1 + n) = 0,$$

the solution of which gives

$$n = 0{\cdot}4685,$$

and therefore,

$$\begin{aligned} Q &= 0{\cdot}5216 \sqrt{2g}\, (H - e)^{\frac{3}{2}} \\ &= 0{\cdot}5216 \sqrt{2g} \left(1 - \frac{e}{H}\right)^{\frac{3}{2}} H^{\frac{3}{2}} \\ &= 0{\cdot}5216 \left(1 - \frac{e}{H}\right)^{\frac{3}{2}} \sqrt{2g} \,.\, H^{\frac{3}{2}} \\ &= m \sqrt{2g} \,.\, H^{\frac{3}{2}}, \end{aligned}$$

the coefficient m being equal to

$$0{\cdot}5216 \left(1 - \frac{e}{H}\right)^{\frac{3}{2}}.$$

M. Bazin has found by actual measurement, that the mean value for $\frac{e}{H}$, when the height of the weir is at considerable distance from the bottom of the channel, is 0·13.

Then, $\left(1 - \frac{e}{H}\right)^{\frac{3}{2}} = 0{\cdot}812$,

and $m = 0{\cdot}423$.

It will be seen on reference to Fig. 77, that this value is very near to the mean value of m as given by Francis and Bazin, and the Cornell experiments. Giving to g the value 32·2,

$$Q = 3{\cdot}39\, H^{\frac{3}{2}} \text{ per foot length of the weir.}$$

If the length of the weir is L feet and there are no end contractions the total discharge is

$$Q = 3{\cdot}39\, L \,.\, H^{\frac{3}{2}},$$

and if there are N contractions

$$Q = 3{\cdot}39\, (L - N\, 0{\cdot}1H)\, H^{\frac{3}{2}}.$$

The coefficient 3·39 agrees remarkably well with the mean value of C obtained from experiment.

The value of a theory must be measured by the closeness of the results of experience with those given by the theory, and in this respect Boussinesq's theory is the most satisfactory, as it not only, in common with the other theories, shows that the flow is proportional to $H^{\frac{3}{2}}$, but also determines the value of the constant C.

84. Solving for Q, by approximation, when the velocity of approach is unknown.

A simple method of determining the discharge over a weir when the velocity of approach is unknown, is, by approximation, as follows.

Let A be the cross-sectional area of the channel.

First find an approximation to Q, without correcting for velocity of approach, from the formula

$$Q = mLh\sqrt{2gh}.$$

The approximate velocity of approach is, then,

$$v = \frac{Q}{A},$$

and H is approximately

$$h + \frac{1{\cdot}6Q^2}{2gA^2}.$$

A nearer approximation to Q can then be obtained by substituting H for h, and if necessary a second value for v can be found and a still nearer approximation to H.

In practical problems this is, however, hardly necessary.

Example. A weir without end contractions has a length of 16 feet. The head as measured on the weir is 2 feet and the depth of the channel of approach below the sill of the weir is 10 feet. Find the discharge.

$$m = 0{\cdot}405 + \frac{{\cdot}00984}{2} = {\cdot}4099.$$

Therefore $C = 3{\cdot}28.$

Approximately, $Q = 3{\cdot}28\ 2^{\frac{3}{2}}.16$

$= 148$ cubic feet per second.

The velocity $v = \frac{148{\cdot}5}{12 \times 16} = {\cdot}77$ ft. per sec.,

and $\frac{1{\cdot}6v^2}{2g} = {\cdot}0147$ feet.

A second approximation to Q is, therefore,

$$Q = 3{\cdot}28\,(2{\cdot}0147)^{\frac{3}{2}}.16$$
$$= 150 \text{ cubic feet per second.}$$

A third value for Q can be obtained, but the approximation is sufficiently near for all practical purposes.

In this case the error in neglecting the velocity of approach altogether, is probably less than the error involved in taking m as 0·4099.

85. Time required to lower the water in a reservoir a given distance by means of a weir.

A reservoir has a weir of length L feet made in one of its sides, and having its sill H feet below the original level of the water in the reservoir.

It is required to find the time necessary for the water to fall to a level H_0 feet above the sill of the weir. It is assumed that the area of the reservoir is so large that the velocity of the water as it approaches the weir may be neglected.

When the surface of the water is at any height h above the sill the flow in a time ∂t is

$$\partial q = \mathrm{CL}h^{\frac{3}{2}}\partial t.$$

Let A be the area of the water surface at this level and ∂h the distance the surface falls in time ∂t.

Then, $$\mathrm{CL}h^{\frac{3}{2}}\partial t = \mathrm{A}\partial h,$$

and $$\partial t = \frac{\mathrm{A}\partial h}{\mathrm{CL}h^{\frac{3}{2}}}.$$

The time required for the surface to fall $(\mathrm{H} - \mathrm{H}_0)$ feet is, therefore,

$$t = \frac{1}{\mathrm{L}}\int_{\mathrm{H}_0}^{\mathrm{H}} \frac{\mathrm{A}dh}{\mathrm{C}h^{\frac{3}{2}}}.$$

The coefficient C may be supposed constant and equal to 3·34. If then A is constant

$$t = \frac{\mathrm{A}}{\mathrm{CL}}\int_{\mathrm{H}_0}^{\mathrm{H}} \frac{dh}{h^{\frac{3}{2}}}$$

$$= \frac{2\mathrm{A}}{\mathrm{CL}}\left(\frac{1}{\sqrt{\mathrm{H}_0}} - \frac{1}{\sqrt{\mathrm{H}}}\right).$$

To lower the level to the sill of the weir, H_0 must be made equal to 0 and t is then infinite.

That is, on the assumptions made, the surface of the water never could be reduced to the level of the sill of the weir. The time taken is not actually infinite as the water in the reservoir is not really at rest, but has a small velocity in the direction of the weir, which causes the time of emptying to be less than that given by the above formula. But although the actual time is not infinite, it is nevertheless very great.

When H_0 is $\frac{1}{4}\mathrm{H}$, $$t = \frac{2\mathrm{A}}{\mathrm{CL}\sqrt{\mathrm{H}}}.$$

When H_0 is $\frac{1}{16}\mathrm{H}$, $$t = \frac{6\mathrm{A}}{\mathrm{CL}\sqrt{\mathrm{H}}}.$$

So that it takes three times as long for the water to fall from $\frac{1}{4}\mathrm{H}$ to $\frac{1}{16}\mathrm{H}$ as from H to $\frac{1}{4}\mathrm{H}$.

Example 1. A reservoir has an area of 60,000 sq. yards. A weir 10 feet long has its sill 2 feet below the surface. Find the time required to reduce the level of the water 1′ 11″.

$$H_0 = \tfrac{1}{12}', \qquad H = 2'.$$

Therefore
$$t = \frac{2 \,.\, 540{,}000}{3{\cdot}34 \,.\, 10}(3{\cdot}46 - 0{\cdot}708),$$
$$t = \frac{2 \,.\, 540{,}000}{3{\cdot}34 \,.\, 10} \,.\, 2{\cdot}752$$
$$= 89{,}000 \text{ secs.}$$
$$= 24{\cdot}7 \text{ hours.}$$

So that, neglecting velocity of approach, there will be only one inch of water on the weir after 24 hours.

Example 2. To find in the last example the discharge from the reservoir in 15 hours.

$$t = \frac{2\ A}{CL}\left(\frac{1}{\sqrt{H_0}} - \frac{1}{\sqrt{H}}\right).$$

Therefore
$$54{,}000 = \frac{2A}{C \,.\, L}\left(\frac{1}{\sqrt{H_0}} - \frac{1}{\sqrt{2}}\right).$$

From which
$$\sqrt{H_0} = 0{\cdot}421,$$
$$H_0 = 0{\cdot}176 \text{ feet.}$$

The discharge is, therefore,
$$(2 - 0{\cdot}176)\ 540{,}000 \text{ cubic feet}$$
$$= 984{,}960 \text{ cubic feet.}$$

EXAMPLES.

(1) A weir is 100 feet long and the head is 9 inches. Find the discharge in c. ft. per minute. $C = 3{\cdot}34$.

(2) The discharge through a sharp-edged rectangular weir is 500 gallons per minute, and the still water head is $2\frac{1}{2}$ inches. Find the effective length of the weir. $m = {\cdot}43$.

(3) A weir is 15 feet long and the head over the crest is 15 inches. Find the discharge. If the velocity of approach to this weir were 5 feet per second, what would be the discharge?

(4) Deduce an expression for the discharge through a right-angled triangular notch. If the head over apex of notch is 12 ins., find the discharge in c. ft. per sec.

(5) A rectangular weir is to discharge 10,000,000 gallons per day (1 gallon = 10 lbs.), with a normal head of 15 ins. Find the length of the weir. Choose a coefficient, stating for what kind of weir it is applicable, or take the coefficient C as 3·33.

(6) What is the advantage in gauging, of using a weir without end contractions?

(7) Deduce Francis' formula by means of the Thomson principle of similarity.

Apply the formula to calculate the discharge over a weir 10 feet wide under a head of 1·2 feet, assuming one end contraction, and neglecting the effect of the velocity of approach.

(8) A rainfall of $\frac{1}{16}$ inch per hour is discharged from a catchment area of 5 square miles. Find the still water head when this volume flows over a weir with free overfall 30 feet in length, constructed in six bays, each 5 feet wide, taking 0·415 as Bazin's coefficient.

(9) A district of 6500 acres (1 acre = 43,560 sq. ft.) drains into a large storage reservoir. The maximum rate at which rain falls in the district is 2 ins. in 24 hours. When rain falls after the reservoir is full, the water requires to be discharged over a weir or bye-wash which has its crest at the ordinary top-water level of the reservoir. Find the length of such a weir for the above reservoir, under the condition that the water in the reservoir shall never rise more than 18 ins. above its top-water level.

The top of the weir may be supposed flat and about 18 inches wide (see Table XI).

(10) Compare rectangular and V notches in regard to accuracy and convenience when there is considerable variation in the flow.

In a rectangular notch 50″ wide the still water surface level is 15″ above the sill.

If the same quantity of water flowed over a right-angled V notch, what would be the height of the still water surface above the apex?

If the channels are narrow how would you correct for velocity of approach in each case? Lon. Un. 1906.

(11) The heaviest daily record of rainfall for a catchment area was found to be 42·0 million gallons. Assuming two-thirds of the rain to reach the storage reservoir and to pass over the waste weir, find the length of the sill of the waste weir, so that the water shall never rise more than two feet above the sill.

(12) A weir is 300 yards long. What is the discharge when the head is 4 feet? Take Bazin's coefficient

$$m = \cdot 405 + \frac{\cdot 00984}{h}.$$

(13) Suppose the water approaches the weir in the last question in a channel 8′ 6″ deep and 500 yards wide. Find by approximation the discharge, taking into account the velocity of approach.

(14) The area of the water surface of a reservoir is 20,000 square yards. Find the time required for the surface to fall one foot, when the water discharges over a sharp-edged weir 5 feet long and the original head over the weir is 2 feet.

(15) Find, from the following data, the horse-power available in a given waterfall:—

Available height of fall 120 feet.

A rectangular notch above the fall, 10 feet long, is used to measure the quantity of water, and the mean head over the notch is found to be 15 inches, when the velocity of approach at the point where the head is measured is 100 feet per minute. Lon. Un. 1905.

CHAPTER V.

FLOW THROUGH PIPES.

86. Resistances to the motion of a fluid in a pipe.

When a fluid is made to flow through a pipe, certain resistances are set up which oppose the motion, and energy is consequently dissipated. Energy is lost, by friction, due to the relative motion of the water and the pipe, by sudden enlargements or contractions of the pipe, by sudden changes of direction, as at bends, and by obstacles, such as valves which interfere with the free flow of the fluid.

It will be necessary to consider these causes of the loss of energy in detail.

Loss of head. Before proceeding to do so, however, the student should be reminded that instead of loss of energy it is convenient to speak of the loss of head.

It has been shown on page 39 that the work that can be obtained from a pound of water, at a height z above datum, moving with a velocity v feet per second, and at a pressure head

$$\frac{p}{w}, \text{ is } \frac{p}{w} + \frac{v^2}{2g} + z \text{ foot pounds.}$$

If now water flows along a pipe and, due to any cause, h foot pounds of work are lost per pound, the available head is clearly diminished by an amount h.

In Fig. 86 water is supposed to be flowing from a tank through a pipe of uniform diameter and of considerable length, the end B being open to the atmosphere.

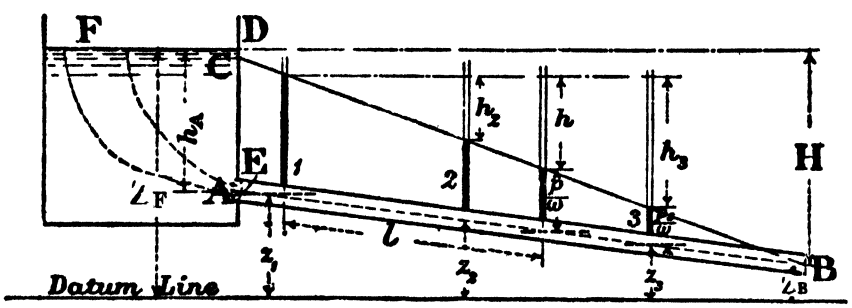

Fig. 86. Loss of head by friction in a pipe.

Let $\frac{p_a}{w}$ be the head due to the atmospheric pressure.

Then if there were no resistances and assuming stream line flow, Bernoulli's equation for the point B is

$$z_B + \frac{p_a}{w} + \frac{v_B^2}{2g} = Z_F + \frac{p_a}{w},$$

from which $$\frac{v_B^2}{2g} = Z_F - Z_B = H,$$

or $$v_B = \sqrt{2gH}.$$

The whole head H above the point B has therefore been utilised to give the kinetic energy to the water leaving the pipe at B. Experiment would show, however, that the mean velocity of the water would have some value v less than v_B, and the kinetic energy would be $\frac{v^2}{2g}$.

A head $$h = \frac{v_B^2}{2g} - \frac{v^2}{2g} = H - \frac{v^2}{2g}$$

has therefore been lost in the pipe.

By carefully measuring H, the diameter of the pipe d, and the discharge Q in a given time, the loss of head h can be determined.

For $$v = \frac{Q}{\left(\frac{\pi}{4}d^2\right)},$$

and therefore $$h = H - \frac{Q^2}{\left(\frac{\pi}{4}d^2\right)^2 2g}.$$

The head h clearly includes all causes of loss of head, which, in this case, are loss at the entrance of the pipe and loss by friction.

87. Loss of head by friction.

Suppose tubes 1, 2, 3 are fitted into the pipe AB, Fig. 86, at equal distance apart, and with their lower ends flush with the inside of the pipe. If flow is prevented by closing the end B of the pipe, the water would rise in all the tubes to the level of the water in the reservoir.

Further, if the flow is regulated at B by a valve so that the mean velocity through the pipe is v feet per second, a permanent *régime* being established, and the pipe is entirely full, the mean velocity at all points along the pipe will be the same; and therefore, if between the tank and the point B there were no resistances offered to the motion, and it be assumed that all the particles

have a velocity equal to the mean velocity, the water would again rise in all the tubes to the same height, but now lower than the surface of the water in the tank by an amount equal to $\frac{v^2}{2g}$.

It is found by experiment, however, that the water does not rise to the same height in the three tubes, but is lower in 2 than in 1 and in 3 than in 2 as shown in the figure. As the fluid moves along the pipe there is, therefore, a loss of head.

The difference of level h_2 of the water in the tubes 1 and 2 is called the head lost by friction in the length of pipe 1 2. In any length l of the pipe the loss of head is h.

This head is not wholly lost simply by the relative movement of the water and the surface of the pipe, as if the water were a solid body sliding along the pipe, but is really the sum of the losses of energy, by friction along the surface, and due to relative motions in the mass of water.

It will be shown later that, as the water flows along the pipe, there is relative motion between consecutive filaments in the pipe, and that, when the velocity is above a certain amount, the water has a sinuous motion along the pipe. Some portion of this head h_2 is therefore lost by the relative motion of the filaments of water, and by the eddy motions which take place in the mass of the water.

When the pipe is uniform the loss of head is proportional to the length of the pipe, and the line CB, drawn through the tops of the columns of water in the tubes and called the hydraulic gradient, is a straight line.

It should be noted that along CB the pressure is equal to that of the atmosphere.

88. Head lost at the entrance to the pipe.

For a point E just inside the pipe, Bernoulli's equation is

$$\frac{p_E}{w} + \frac{v^2}{2g} + \text{head lost at entrance to the pipe} = h_A + \frac{p_a}{w},$$

$\frac{p_E}{w}$ being the absolute pressure head at E.

The head lost at entrance has been shown on page 70 to be about $\frac{0{\cdot}5v^2}{2g}$, and therefore,

$$\frac{p_E}{w} - \frac{p_a}{w} = h_A - \frac{1{\cdot}5v^2}{2g}.$$

That is, the point C on the hydraulic gradient vertically above E, is $\frac{1{\cdot}5v^2}{2g}$ below the surface FD.

If the pipe is bell-mouthed, there will be no head lost at entrance, and the point C is a distance equal to $\frac{v^2}{2g}$ below the surface.

89. Hydraulic gradient and virtual slope.

The line CB joining the tops of the columns of water in the tube, is called the hydraulic gradient, and the angle i which it makes with the horizontal is called the slope of the hydraulic gradient, or the virtual slope. The angle i is generally small, and $\sin i$ may be taken therefore equal to i, so that $\frac{h}{l} = i$.

In what follows the virtual slope $\frac{h}{l}$ is denoted by i.

More generally the hydraulic gradient may be defined as the line, the vertical distance between which and the centre of the pipe gives the pressure head at that point in the pipe. This line will only be a straight line between any two points of the pipe, when the head is lost uniformly along the pipe.

If the pressure head is measured above the atmospheric pressure, the hydraulic gradient in Fig. 87 is AD, but if above zero, A_1D_1 is the hydraulic gradient, the vertical distance between AD and A_1D_1 being equal to $\frac{p_a 144}{w}$, p_a being the atmospheric pressure per sq. inch.

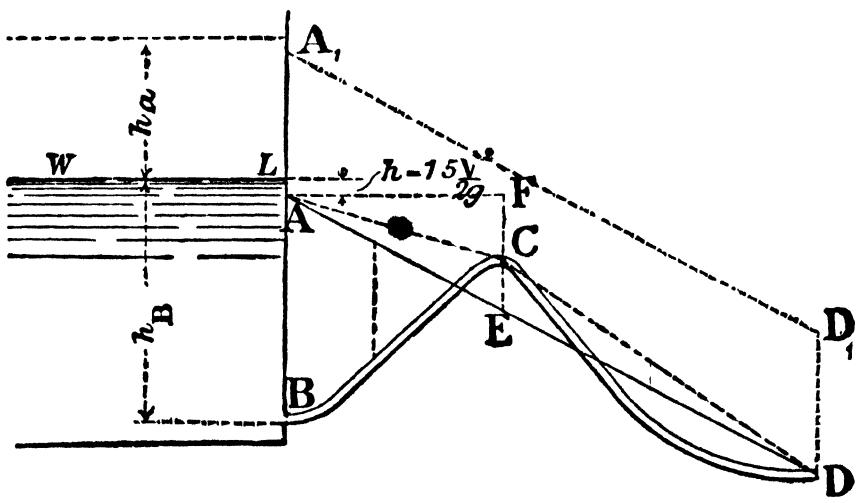

Fig. 87. Pipe rising above the Hydraulic Gradient.

If the pipe rises above the hydraulic gradient AD, as in Fig. 87, the pressure in the pipe at C will be less than that of the atmosphere by a head equal to CE. If the pipe is perfectly air-tight it will act as a siphon and the discharge for a given length of pipe will not be altered. But if a tube open to the atmosphere be fitted at

the highest point, the pressure at C is equal to the atmospheric pressure, and the hydraulic gradient will be now AC, and the flow will be diminished, as the available head to overcome the resistances between B and C, and to give velocity to the water, will only be CF, and the part of the pipe CD will not be kept full.

In practice, although the pipe is closed to the atmosphere, yet air will tend to accumulate and spoil the siphon action.

As long as the point C is below the level of the water in the reservoir, water will flow along the pipe, but any accumulation of air at C tends to diminish the flow. In an ordinary pipe line it is desirable, therefore, that no point in the pipe should be allowed to rise above the hydraulic gradient.

90. Determination of the loss of head due to friction. Reynolds' apparatus.

Fig. 88 shows the apparatus as used by Professor Reynolds* for determining the loss of head by friction in a pipe.

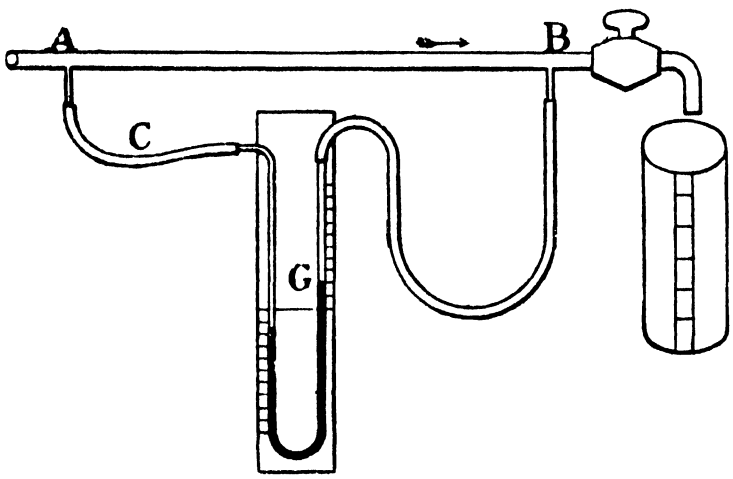

Fig. 88. Reynolds' apparatus for determining loss of head by friction in a pipe.

A horizontal pipe AB, 16 feet long, was connected to the water main, a suitable regulating device being inserted between the main and the pipe.

At two points 5 feet apart near the end B, and thus at a distance sufficiently removed from the point at which the water entered the pipe, that any initial eddy motions might be destroyed and a steady *régime* established, two holes of about 1 mm. diameter were pierced into the pipe for the purpose of gauging the pressure, at these points of the pipe.

Short tubes were soldered to the pipe, so that the holes communicated with these tubes, and these were connected by

* *Phil. Trans.* 1883, or Vol. II. *Scientific Papers*, Reynolds.

indiarubber pipes to the limbs of a siphon gauge G, made of glass, and which contained mercury or bisulphide of carbon. Scales were fixed behind the tubes so that the height of the columns in each limb of the gauge could be read.

For very small differences of level a cathetometer was used*. When water was made to flow through the pipe, the difference in the heights of the columns in the two limbs of the siphon measured the difference of pressure at the two points A and B of the pipe, and thus measured the loss of head due to friction.

If s is the specific gravity of the liquid, and H the difference in height of the columns, the loss of head due to friction in feet of water is $h = \mathrm{H}(s-1)$.

The quantity of water flowing in a time t was obtained by actual measurement in a graduated flask.

Calling v the mean velocity in the pipe in feet per second, Q the discharge in cubic feet per second, and d the diameter of the pipe in feet,

$$v = \frac{\mathrm{Q}}{\frac{\pi}{4}d^2}.$$

The loss of head at different velocities was carefully measured, and the law connecting head lost in a given length of pipe, with the velocity, determined.

The results obtained by Reynolds, and others, using this method of experimenting, will be referred to later.

91. Equation of flow in a pipe of uniform diameter and determination of the head lost due to friction.

Let ∂l be the length of a small element of pipe of uniform diameter, Fig. 89.

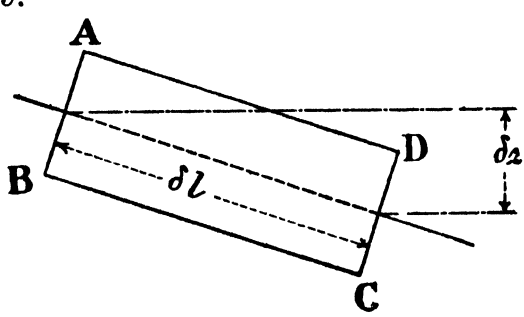

Fig. 89.

Let the area of the transverse section be ω, P the length of the line of contact of the water and the surface on this section, or the wetted perimeter, α the inclination of the pipe, p the pressure per unit area on AB, and $p - \partial p$ the pressure on CD.

* p. 258, Vol. I. *Scientific Papers*, Reynolds.

Let v be the mean velocity of the fluid, Q the flow in cubic feet per second, and w the weight of one cubic foot of the fluid.

The work done by gravity as the fluid flows from AB to CD

$$= Qw \,.\, \partial z = \omega \,.\, v \,.\, w \,.\, \partial z.$$

The work done on ABCD by the pressure acting upon the area AB

$$= p \,.\, \omega \,.\, v \text{ ft. lbs. per sec.}$$

The work done by the pressure acting upon CD against the flow

$$= (p - \partial p) \,.\, \omega \,.\, v \text{ ft. lbs. per sec.}$$

The frictional force opposing the motion is proportional to the area of the wetted surface and is equal to $F \,.\, P \,.\, \partial l$, where F is some coefficient which must be determined by experiment and is the frictional force per unit area. The work done by friction per sec. is, therefore, $F \,.\, P \,.\, \partial l \,.\, v$.

The velocity being constant, the velocity head is the same at both sections, and therefore, applying the principle of the conservation of energy,

$$p \,.\, \omega \,.\, v + \omega \,.\, v \,.\, w \,.\, \partial z = (p - \partial p)\, \omega \,.\, v + F \,.\, P \,.\, \partial l \,.\, v.$$

Therefore $$\omega \,.\, w \,.\, \partial z = -\partial p \,.\, \omega + F \,.\, P \,.\, \partial l,$$

or $$dz = -\frac{dp}{w} + \frac{F \,.\, P \,.\, dl}{w \,.\, \omega}.$$

Integrating this equation between the limits of z and z_1, p and p_1 being the corresponding pressures, and l the length of the pipe,

$$z - z_1 = \frac{p_1}{w} - \frac{p}{w} + \frac{F \,.\, P}{w} \frac{l}{\omega}.$$

Therefore, $$\frac{p}{w} + z = \frac{p_1}{w} + z_1 + \frac{FP}{w} \frac{l}{\omega}.$$

The quantity $\frac{FPl}{w\omega}$ is equal to h_f of equation (1), page 48, and is the loss of head due to friction. The head lost by friction is therefore proportional to the area of the wetted surface of the pipe Pl, and inversely proportional to the cross sectional area of the pipe and to the density of the fluid.

92. Hydraulic mean depth.

The quantity $\frac{\omega}{P}$ is called the hydraulic radius, or the hydraulic mean depth.

If then this quantity is denoted by m, the head h lost by friction, is

$$h = \frac{Fl}{w \,.\, m}.$$

The* quantity F, which has been called above the friction per unit area, is found by experiments to vary with the density, viscosity, and velocity of the fluid, and with the diameter and roughness of the internal surface of the pipe.

In Hydraulics, the fluid considered is water, and any variations in density or viscosity, due to changes of temperature, are generally negligible. F, therefore, may be taken as proportional to the density, or to the weight w per cubic foot, to the roughness of the pipe, and as some function, $f(v)$ of the mean velocity, and $f(d)$ of the diameter of the pipe.

Then, $$h = \frac{\mu f(v) f(d)\, l}{m},$$

in which expression μ may be called the coefficient of friction.

It will be seen later, that the mean velocity v is different from the relative velocity u of the water and the surface of the pipe, and it probably would be better to express F as a function of u, but as u itself probably varies with the roughness of the pipe and with other circumstances, and cannot directly be determined, it simplifies matters to express F, and thus h, as a function of v.

93. Empirical formulae for loss of head due to friction.

The difficulty of correctly determining the exact value of $f(v)\ f(d)$, has led to the use of empirical formulae, which have proved of great practical service, to express the head h in terms of the velocity and the dimensions of the pipe.

The simplest* formula assumes that the friction simply varies as the square of the velocity, and is independent of the diameter of the pipe, or $$\mu f(v)\, f(d) = av^2.$$

Then, $$h = \frac{av^2 l}{m} \quad \text{.....(1)},$$

or writing $\frac{1}{C^2}$ for a,

$$h = \frac{v^2 l}{C^2 m} \quad \text{.....(2)},$$

from which is deduced the well-known † Chezy formula,

$$v = C\sqrt{m.\frac{h}{l}},$$

or $$v = C\sqrt{mi}.$$

Another form in which formula (1) is often found is

$$h = \frac{f.v^2}{2g}\frac{l}{m},$$

* See Appendix, pages 563 and 565. † See also pages 231–233.

or since $m = \frac{d}{4}$ for a circular pipe full of water,

$$h = \frac{4f \cdot v^2 l}{2g \cdot d} \quad \text{.....(3)},$$

in which for a of (1) is substituted $\frac{f}{2g}$.

The quantity $2g$ was introduced by Weisbach so that h is expressed in terms of the velocity head.

Adopting either of these forms, the values of the coefficients C and f are determined from experiments on various classes of pipes.

It should be noticed that $C = \sqrt{\frac{2g}{f}}$.

Values of these constants are shown in Tables XII to XIV for different kinds and diameters of pipes and different velocities.

TABLE XII.

Values of C in the formula $v = C\sqrt{mi}$ for new and old cast-iron pipes.

	New cast-iron pipes				Old cast-iron pipes			
Velocities in ft. per second	1	3	6	10	1	3	6	10
Diameter of pipe								
3″	95	98	100	102	63	68	71	73
6″	96	101	104	106	69	74	77	79
9″	98	105	109	112	73	78	80	84
12″	100	108	112	117	77	82	85	88
15″	102	110	117	122	81	86	89	91
18″	105	112	119	125	86	91	94	97
24″	111	120	126	131	92	98	101	104
30″	118	126	131	136	98	103	106	109
36″	124	131	136	140	103	108	111	114
42″	130	136	140	144	105	111	114	117
48″	135	141	145	148	106	112	115	118
60″	142	147	150	152				

For method of determining the values of C given in the tables, see page 132.

On reference to these tables, it will be seen, that C and f are by no means constant, but vary very considerably for different kinds of pipes, and for different values of the velocity in any given pipe.

The fact that C varies with the velocity, and the diameter of the pipe, suggests that the coefficient C is itself some function of the velocity of flow, and of the diameter of the pipe, and that $\mu f(v) f(d)$ does not, therefore, equal av^2.

TABLE XIII.

Values of f in the formula

$$h = \frac{4fv^2 . l}{2gd}.$$

	New cast-iron pipes				Old cast-iron pipes			
Velocities in ft. per second	1	3	6	10	1	3	6	10
Diam. of pipe								
3″	·0071	·0067	·0064	·0062	·0152	·0139	·0128	·0122
6″	·007	·0063	·006	·0057	·0135	·0117	·0108	·0103
9″	·0067	·0058	·0055	·0051	·0122	·0105	·010	·0092
12″	·0064	·0056	·0051	·0048	·0108	·0096	·0089	·0084
15″	·0062	·0053	·0048	·0043	·0099	·0087	·0081	·0078
18″	·0058	·0051	·0045	·0041	·0087	·0078	·0073	·0069
24″	·0053	·0045	·0040	·0037	·0076	·0067	·0063	·0060
30″	·0046	·0040	·0037	·0035	·0067	·0061	·0057	·0055
36″	·0042	·0037	·0035	·0033	·0061	·0056	·0052	·0050
42″	·0038	·0035	·0033	·0031	·0058	·0052	·005	·0048
48″	·0036	·0032	·0031	·0029	·0057	·0051	·0049	·0046
60″	·0032	·0030	·0029	·0028				

TABLE XIV.

Values of C in the formula $v = C\sqrt{mi}$ for steel riveted pipes.

Velocities in ft. per second	1	3	5	10
Diameter of pipe				
3″	81	86	89	92
11″	92	102	107	115
11¾″	93	99	102	105
15″	109	112	114	117
38″	113	113	113	113
42″	102	106	108	111
48″	105	105	105	105
72″*	110	110	111	111
72″	93	101	105	110
103″	114	109	106	104

* See pages 124 and 137.

94. Formula of Darcy.

In 1857 Darcy* published an account of a series of experiments on flow of water in pipes, previous to the publication of which, it had been assumed by most writers that the friction and consequently the constant C was independent of the nature of the wetted surface of the pipe (see page 232). He, however, showed by experiments upon pipes of various diameters and of different materials, including wrought iron, sheet iron covered with bitumen, lead, glass, and new and old cast-iron, that the condition of the internal surface was of considerable importance and that the resistance was by no means independent of it.

He also investigated the influence of the diameter of the pipe upon the resistance. The results of his experiments he expressed by assuming the coefficient a in the formula

$$h = \frac{al}{m} \cdot v^2$$

was of the form

$$a = \alpha + \frac{\beta}{r},$$

r being the radius of the pipe.

For new cast-iron, and wrought-iron pipes of the same roughness, Darcy's values of α and β when transferred to English units are,

$$\alpha = 0{\cdot}000077,$$
$$\beta = 0{\cdot}000003235.$$

For old cast-iron pipes Darcy proposed to double these values. Substituting the diameter d for the radius r, and doubling β, for new pipes,

$$h = \left(0{\cdot}000077 + \frac{0{\cdot}00000647}{d}\right)\frac{v^2 l}{m}$$
$$= 0{\cdot}00000647\left(\frac{12d+1}{d}\right)\frac{v^2 l}{m},$$

or

$$v = 394\sqrt{\frac{d}{12d+1}}\sqrt{mi} \quad \text{.....(4)}$$
$$= 197\sqrt{\frac{d}{12d+1}}\sqrt{di} \quad \text{.....(5).}$$

Substituting for m its value $\frac{d}{4}$, and multiplying and dividing by $2g$,

$$h = 0{\cdot}005\left(1 + \frac{1}{12d}\right)\frac{v^2}{2g}\frac{4l}{d} \quad \text{.....(6).}$$

For old cast-iron pipes,

$$h = 0{\cdot}00001294\left(\frac{12d+1}{d}\right)\frac{v^2 l}{m}$$
$$= 0{\cdot}01\left(1 + \frac{1}{12d}\right)\frac{4v^2}{2g} \cdot \frac{l}{d} \quad \text{.....(7).}$$

* *Recherches Expérimentales.*

Or, $$v = 278\sqrt{\frac{d}{12d+1}}\sqrt{mi} \quad \text{.....(8)}$$

$$= 139\sqrt{\frac{d}{12d+1}}\sqrt{d.i} \quad \text{.....(9).}$$

As the student cannot possibly retain, without unnecessary labour, values of f and C for different diameters it is convenient to remember the simple forms,

$$f = \cdot 005\left(1 + \frac{1}{12d}\right)$$

for new pipes, and

$$f = \cdot 01\left(1 + \frac{1}{12d}\right)$$

for old pipes.

According to Darcy, therefore, the coefficient C in the Chezy formula varies only with the diameter and roughness of the pipe.

The values of C as calculated from his experimental results, for some of the pipes, were practically constant for all velocities, and notably for those pipes which had a comparatively rough internal surface, but for smooth pipes, the value of C varied from 10 to 20 per cent. for the same pipe as the velocity changed. The experiments of other workers show the same results.

The assumption that $\mu f(v) f(d) = av^2$ in which a is made to vary only with the diameter and roughness, or in other words, the assumption that h is proportional to v^2 is therefore not in general justified by experiments.

95. As stated above, the formulae given must be taken as purely empirical, and though by the introduction of suitable constants they can be made to agree with any particular experiment, or even set of experiments, yet none of them probably expresses truly the laws of fluid friction.

The formula of Chezy by its simplicity has found favour, and it is likely, that for some time to come, it will continue to be used, either in the form $v = C\sqrt{mi}$, or in its modified form

$$h = \frac{4fv^2 . l}{2gd}.$$

In making calculations, values of C or f, which most nearly suit any given case, can be taken from the tables.

96. Variation of C in the formula $v = C\sqrt{mi}$ with service.

It should be clearly borne in mind, however, that the discharging capacity of a pipe may be considerably diminished after a few years' service.

Darcy's results show that the loss of head in an old pipe may be double that in a new one, or since the velocity v is taken as

proportional to the square root of h, the discharge of the old pipe for the same head will be $\frac{1}{\sqrt{2}}$ times that of the new pipe, or about 30 per cent. less.

An experiment by Sherman* on a 36-inch cast-iron main showed that after one year's service the discharge was diminished by 23 per cent., but a second year's service did not make any further alteration.

Experiments by Kuichling† on a 36-inch cast-iron main showed that the discharge during four years diminished 36 per cent., while experiments by Fitzgerald‡ on a cast-iron main, coated with tar, which had been in use for 16 years, showed that cleaning increased the discharge by nearly 40 per cent. Fitzgerald also found that the discharge of the Sudbury aqueduct diminished 10 per cent. in one year due to accumulation of slime.

The experiments of Marx, Wing, and Hoskins§ on a 72-inch steel main, when new, and after two years' service, showed that there had been a change in the condition of the internal surface of the pipe, and that the discharge had diminished by 10 per cent. at low velocities and about 5 per cent. at the higher velocities.

If, therefore, in calculations for pipes, values of C or f are used for new pipes, it will in most cases be advisable to make the pipe of such a size that it will discharge under the given head at least from 10 to 30 per cent. more than the calculated value.

97. Ganguillet and Kutter's formula. Bazin formula.

Ganguillet and Kutter endeavoured to determine a form for the coefficient C in the Chezy formula $v = C\sqrt{mi}$, applicable to all forms of channels, and in which C is made a function of the virtual slope i, and also of the diameter of the pipe.

They gave C the value,

$$C = \frac{41{\cdot}6 + \frac{1{\cdot}811}{n} + \frac{0{\cdot}00281}{i}}{1 + \left(41{\cdot}6 + \frac{0{\cdot}00281}{i}\right)\frac{n}{\sqrt{m}}} \quad \text{.....(10).}$$

This formula is very cumbersome to use, and the value of the coefficient of roughness n for different cases is uncertain; tables and diagrams have however been prepared which considerably facilitate its use. A simpler form has been suggested for channels by Bazin (see page 185) which, by changing the constants, can be used for pipes‖.

* *Trans. Am.S.C.E.* Vol. XLIV. p. 85. † *Trans. Am.S.C.E.* Vol. XLIV. p. 56. ‡ *Trans. Am.S.C.E.* Vol. XLIV. p. 87. § See Table No. XIV. ‖ *Proc. Inst. C.E.* 1919.

Values of n in Ganguillet and Kutter's formula.

Wood pipes	= ·01,	may be as high as ·015.
Cast-iron and steel pipes	= ·011,	„ „ ·02.
Glazed earthenware	= ·013.	

98. *Reynolds' experiments and the logarithmic formula.

The formulae for loss of head due to friction previously given have all been founded upon a probable law of variation of h with v, but no rational basis for the assumptions has been adduced.

It has been stated in section 93, that on the assumption that h varies with v^2, the coefficient C in the formula

$$v = C\sqrt{m\frac{h}{l}},$$

is itself a function of the velocity.

The experiments and deductions of Reynolds, and of later workers, throw considerable light upon this subject, and show that h is proportional to v^n, where n is an index which for very small velocities †—as previously shown by Poiseuille by experiments on capillary tubes—is equal to unity, and for higher velocities may have a variable value, which in many cases approximates to 2.

As Darcy's experiments marked a decided advance, in showing experimentally that the roughness of the wetted surface has an effect upon the loss due to friction, so Reynolds' work marked a further step in showing that the index n depends upon the state of the internal surface, being generally greater the rougher the surface.

The student will be better able to follow Reynolds, by a brief consideration of one of his experiments.

In Table XV are shown the results of an experiment made by Reynolds with apparatus as illustrated in Fig. 88.

In columns 1 and 5 are shown the experimental values of $i = \frac{h}{l}$, and v respectively.

The curves, Fig. 90, were obtained by plotting v as abscissae and i as ordinates.

For velocities up to 1·347 feet per second, the points lie very close to a straight line and i is simply proportional to the velocity, or

$$i = k_1 v \quad \text{.....(11)},$$

k_1 being a coefficient for this particular pipe.

Above 2 feet per second, the points lie very near to a continuous curve, the equation to which is

$$i = kv^n \quad \text{.....(12)}.$$

* See also Appendix 2. † *Phil. Trans.* 1883.

Taking logarithms,

$$\log i = \log k + n \log v.$$

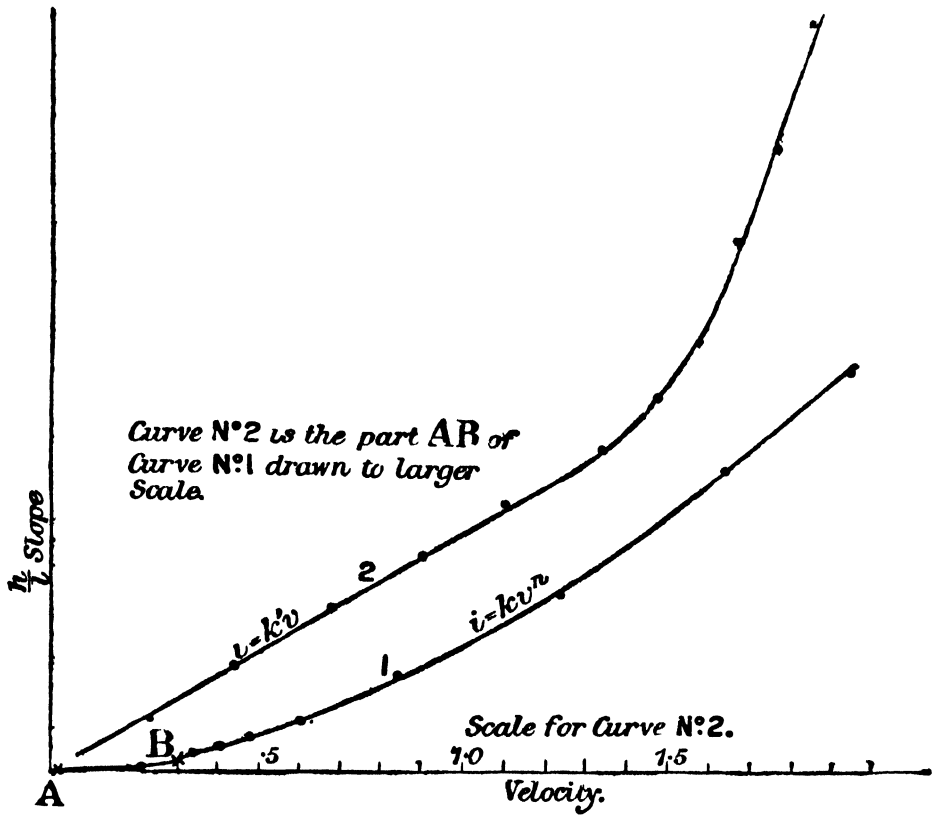

Fig. 90.

The curve, Fig. 90 *a*, was determined by plotting $\log i$ as ordinate and $\log v$ as abscissae. Reynolds calls the lines of this figure the logarithmic homologues.

Calling $\log i$, y, and $\log v$, x, the equation has the form

$$y = k + nx,$$

which is an equation to a straight line, the inclination of which to the axis of x is

$$\theta = \tan^{-1} n,$$

or

$$n = \tan \theta.$$

Further, when $x = 0$, $y = k$, so that the value of k can readily be found as the ordinate of the line when x or $\log v = 0$, that is, when $v = 1$.

Up to a velocity of 1·37 feet per second, the points lie near to a line inclined at 45 degrees to the axis of v, and therefore, n is unity, or as stated above, $i = kv$.

The ordinate when v is equal to unity is 0·038, so that for the first part of the curve $k = \cdot 038$, and $i = \cdot 038v$.

Above the velocity of 2 feet per second the points lie about a second straight line, the inclination of which to the axis of v is

$$\theta = \tan^{-1} 1{\cdot}70.$$

Therefore $$\log i = 1{\cdot}70 \log v + \log k.$$

The ordinate when v equals 1 is 0·042, so that

$$k = 0{\cdot}042,$$

and $$i = 0{\cdot}042 v^{1{\cdot}70}.$$

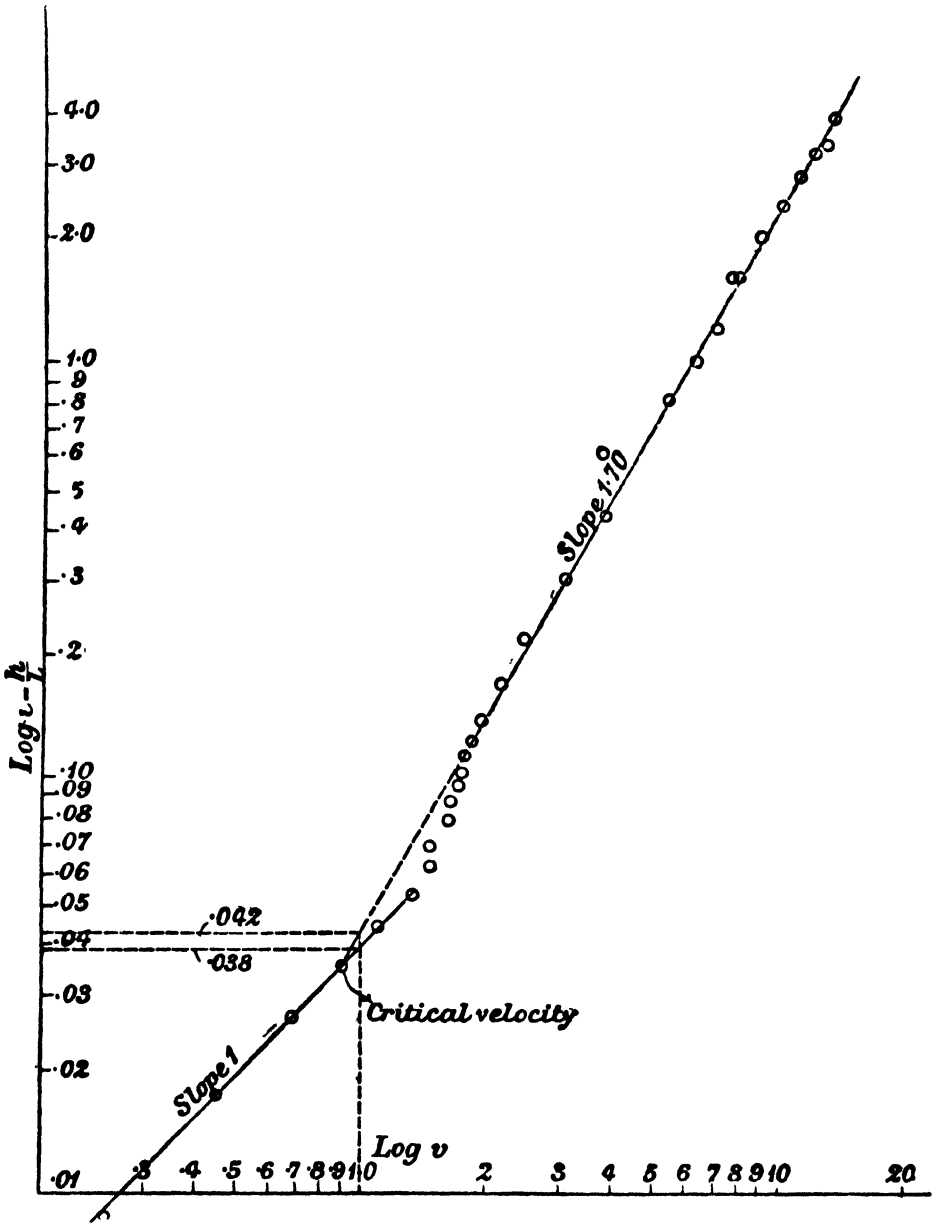

Fig. 90 *a*. Logarithmic plottings of i and v to determine the index n in the formula for pipes, $i = kv^n$.

In the table are given values of i as determined experimentally and as calculated from the equation $i = k \,.\, v^n$.

The quantities in the two columns agree within 8 per cent.

TABLE XV.

Experiment on Resistance in Pipes.

Lead Pipe. Diameter 0·242″. Water from Manchester Main.

Slope $i = \frac{h}{l}$		k	n	Velocity ft. per second
Experimental value	Calculated from $i = kv^n$			
·0086	·0092	·038	1	·239
·0172	·0172	·038	1	·451
·0258	·0261	·038	1	·690
·0345	·0347	·038	1	·914
·0430	·0421	·038	1	1·109
·0516	·0512	·038	1	1·349
·0602	...	...	...	1·482
·0682	...	...	...	1·573
·0861	...	...	...	1·671
·1033	...	...	...	1·775
·1206	...	...	...	1·857
·1378	·1352	·042	1·70	1·987
·1714	·1610	·042	1·70	2·203
·3014	·2944	·042	1·70	3·141
·4306	·4207	·042	1·70	3·93
·8185	·8017	·042	1·70	5·66
1·021	1·033	·042	1·70	6·57
1·433	1·476	·042	1·70	8·11
2·455	2·404	·042	1·70	10·79
3·274	3·206	·042	1·70	12·79
3·873	3·899	·042	1·70	14·29

NOTE. To make the columns shorter, only part of Reynolds' results are given.

99. *Critical velocity.

It appears, from Reynolds' experiment, that up to a certain velocity, which is called the Critical Velocity, the loss of head is proportional to v, but above this velocity there is a definite change in the law connecting i and v.

By experiments upon pipes of different diameters and the water at variable temperatures, Reynolds found that the critical velocity, which was taken as the point of intersection of the two straight lines, was

$$v_c = \frac{\cdot 0388 P}{D},$$

the value of P being

$$P = \frac{1}{1 + 0\cdot 0336 T + \cdot 000221 T^2} \quad \text{.....(13)},$$

T being the temperature in degrees centigrade and D the diameter of the pipe.

* See also Appendix 2.

100. Critical velocity by the method of colour bands.

The existence of the critical velocity has been beautifully shown by Reynolds, by the method of colour bands, and his experiments also explain why there is a sudden change in the law connecting i and v.

"Water was drawn through tubes (Figs. 91 and 92), out of a large glass tank in which the tubes were immersed, and in which the water had been allowed to come to rest, arrangements being made as shown in the figure so that a streak or streaks of highly coloured water entered the tubes with the clear water."

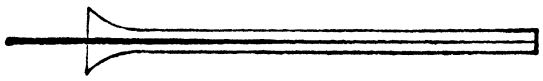

Fig. 91.

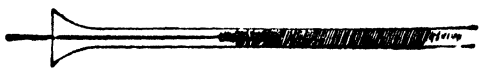

Fig. 92.

The results were as follows:—

"(1) When the velocities were sufficiently low, the streak of colour extended in a beautiful straight line through the tube" (Fig. 91).

"(2) As the velocity was increased by small stages, at some point in the tube, always at a considerable distance from the trumpet-shaped intake, the colour band would all at once mix up with the surrounding water, and fill the rest of the tube with a mass of coloured water" (Fig. 92).

This sudden change takes place at the critical velocity.

That such a change takes place is also shown by the apparatus illustrated in Fig. 88; when the critical velocity is reached there is a violent disturbance of the mercury in the U tube.

There is, therefore, a definite and sudden change in the condition of flow. For velocities below the critical velocity, the flow is parallel to the tubes, or is "Stream Line" flow, but after the critical velocity has been passed, the motion parallel to the tube is accompanied by eddy motions, which cause a definite change to take place in the law of resistance.

Barnes and Coker* have determined the critical velocity by noting the sudden change of temperature of the water when its motion changes. They have also found that the critical velocity, as determined by noting the velocity at which stream-line flow

* *Proceedings of the Royal Society*, Vol LXXIV. 1904; *Phil. Transactions, Royal Society*, Vol. XX. pp. 45—61.

breaks up into eddies, is a much more variable quantity than that determined from the points of intersection of the two lines as in Fig. 90. In the former case the critical velocity depends upon the condition of the water in the tank, and when it is perfectly at rest the stream lines may be maintained at much higher velocities than those given by the formula of Reynolds. If the water is not perfectly at rest, the results obtained by both methods agree with the formula.

Barnes and Coker have called the critical velocity obtained by the method of colour bands the upper limit, and that obtained by the intersection of the logarithmic homologues the lower critical velocity. The first gives the velocity at which water flowing from rest in stream-line motion breaks up into eddy motion, while the second gives the velocity at which water that is initially disturbed persists in flowing with eddy motions throughout a long pipe, or in other words the velocity is too high to allow stream lines to be formed.

That the motion of the water in large conduits is in a similar condition of motion is shown by the experiment of Mr G. H. Benzenberg* on the discharge through a sewer 12 feet in diameter, 2534 ft. long.

In order to measure the velocity of water in the sewer, red eosine dissolved in water was suddenly injected into the sewer, and the time for the coloured water to reach the outlet half a mile away was noted. The colour was readily perceived and it was found that it was never distributed over a length of more than 9 feet. As will be seen by reference to section 130, the velocities of translation of the particles on any cross section at any instant are very different, and if the motion were stream line the colour must have been spread out over a much greater length.

101. Law of frictional resistance for velocities above the critical velocity.

As seen from Reynolds' formula, the critical velocity except for very small pipes is so very low that it is only necessary in practical hydraulics to consider the law of frictional resistance for velocities above the critical velocity.

For any particular pipe, $i = kv^n$, and it remains to determine k and n.

Applying the Principle of Dynamical Similarity† and from the plottings of the results of his own and Darcy's experiments,

* *Transactions Am.S.C.E.*, 1893; and also *Proceedings Am.S.C.E.*, Vol. XXVII. p. 1173.

† See page 563.

Reynolds found that the law of resistance "for all pipes and all velocities" could be expressed as

$$\frac{AD^3}{P^2} i = \left(\frac{BD}{P} v\right)^n \quad \text{.....(14).}$$

Transposing,

$$i = \frac{B^n D^n . v^n . P^2}{AP^n . D^3} \quad \text{.....(15),}$$

and

$$k = \frac{B^n}{A} \frac{P^{2-n}}{D^{3-n}}.$$

D is diameter of pipe, A and B are constants, and P is obtained from formula (13).

Taking the temperature in degrees centigrade and the metre as unit length,

$$A = 67{,}700{,}000,$$

$$B = 396,$$

$$P = \frac{1}{1 + \cdot 0036T + \cdot 000221T^2},$$

or

$$i = \frac{B^n . v^n . P^{2-n}}{67{,}700{,}000\, D^{3-n}} = \frac{\gamma . v^n}{D^{3-n}} \quad \text{.....(16),}$$

in which

$$\gamma = \frac{B^n P^{2-n}}{67{,}700{,}000}.$$

Values of γ *when the temperature is* 10° C.

n	γ
1·75	0·000265
1·85	0·000388
1·95	0·000587
2·00	0·000704

The values for A and B, as given by Reynolds, are, however, only applicable to clean pipes, and later experiments show that although

$$i = \frac{\gamma . v^n}{D^p},$$

for clean pipes (see p. 566), it is doubtful whether

$$p = 3 - n,$$

as given by Reynolds, is correct for dirty pipes.

Value of n. For smooth pipes n appears to be nearly 1·75. Reynolds found the mean value of n for lead pipes was 1·723.

Saph and Schoder*, in an elaborate series of experiments carried out at Cornell University, have determined for smooth

* *Transactions of the American Society of Civil Engineers*, May, 1903. See exercise 31, page 172.

brass pipes a mean value for n of 1·75. Coker and Clements found that n for a brass pipe ·3779 inches diameter was 1·731. In column 5 of Table XVI are given values of n, some taken from Saph and Schoder's paper, and others as determined by the author by logarithmic plotting of a large number of experiments.

It will be seen that n varies very considerably for pipes of different materials, and depends upon the condition of the surface of a given material, as is seen very clearly from Nos. 3 and 4. The value for n in No. 3 is 1·72, while for No. 4, which is the same pipe after two years' service, the value of n is 1·93. The internal surface had no doubt become coated with a deposit of some kind.

Even very small differences in the condition of the surface, such as cannot be seen by the unaided eye, make a considerable difference in the value of n, as is seen by reference to the values for galvanised pipes, as given by Saph and Schoder. For large pipes of riveted steel, riveted wrought iron, and cast iron, the value of n approximates to 2.

The method, of plotting the logarithms of i and v determined by experiment, allows of experimental errors being corrected without difficulty and with considerable assurance.

102. The determination of the values of C given in Table XII.

The method of logarithmic plotting has been employed for determining the values of C given in Table XII.

If values of C are calculated by the substitution of the experimental values of v and i in the formula

$$C = \frac{v}{\sqrt{mi}},$$

many of the results are apparently inconsistent with each other due to experimental errors.

The values of C in the table were, therefore, determined as follows.

Since $$i = kv^n$$

and in the Chezy formula

$$v = C\sqrt{mi},$$

or $$i = \frac{v^2}{mC^2},$$

therefore $$\frac{v^2}{mC^2} = kv^n$$

and $$2 \log C = 2 \log v - (\log m + \log k + n \log v) \quad \ldots\ldots(17).$$

The index n and the coefficient k were determined for a number of cast-iron pipes.

Values of C for velocities from 1 to 10 were calculated. Curves were then plotted, for different velocities, having C as ordinates and diameters as abscissae, and the values given in the table were deduced from the curves.

The values of C so interpolated differ very considerably, in some cases, from the experimental values. The difficulties attending the accurate determination of i and v are very great, and the values of C, for any given pipe, as calculated by substituting in the Chezy formula the losses of head in friction and the velocities as determined in the experiments, were frequently inconsistent with each other.

As, for example, in the pipe of 3·22 ins. diameter given in Table XVI which was one of Darcy's pipes, the variation of C as calculated from h and v given by Darcy is from 78·8 to 100.

On plotting $\log h$ and $\log v$ and correcting the readings so that they all lie on one line and recalculating C the variation was found to be only from 95·9 to 101.

Similar corrections have been made in other cases.

The author thinks this procedure is justified by the fact that many of the best experiments do not show any such inconsistencies.

An attempt to draw up an interpolated table for riveted pipes was not satisfactory. The author has therefore in Table XIV given the values of C as calculated by formula (17), for various velocities, and the diameters of the pipes actually experimented upon. If curves are plotted from the values of C given in Table XIV, it will be seen that, except for low velocities, the curves are not continuous, and, until further experimental evidence is forthcoming for riveted pipes, the engineer must be content with choosing values of C which most nearly coincide, as far as he can judge, with the case he is considering.

103. Variation of k, in the formula $i = kv^n$, with the diameter.

It has been shown in section 98 how the value of k, for a given pipe, can be obtained by the logarithmic plotting of i and v.

In Table XVI, are given values of k, as determined by the author, by plotting the results of different experiments. Saph and Schoder found that for smooth hard-drawn brass pipes of various sizes n varied between 1·73 and 1·77, the mean value being 1·75.

By plotting $\log d$ as abscissae and $\log k$ as ordinates, as in Fig. 93, for these brass pipes the points lie nearly in a straight line which has an inclination θ with the axis of d, such that

$$\tan \theta = -1{\cdot}25$$

and the equation to the line is, therefore,

$$\log k = \log \gamma - p \log d,$$

where $p = 1{\cdot}25$,

and $\log \gamma = \log k$

when $d = 1$.

From the figure

$$\gamma = 0{\cdot}000296 \text{ per foot length of pipe.}$$

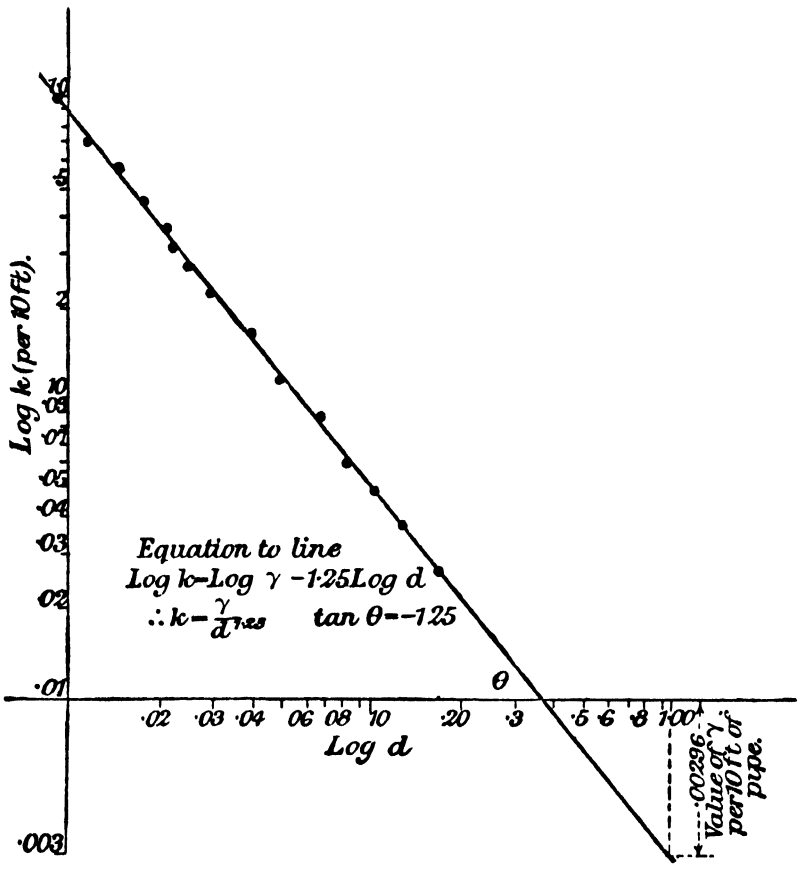

Fig. 93. Logarithmic plottings of k and d to determine the index p in the formula

$$i = \frac{\gamma \cdot v^n}{d^p}.$$

On the same figure are plotted $\log d$ and $\log k$, as deduced from experiments on lead and glass pipes by various workers. It will be seen that all the points lie very close to the same line.

For smooth pipes, therefore, and for velocities above the critical velocity, the loss of head due to friction is given by

$$i = \frac{\gamma v^n}{d^p},$$

the mean value for γ being 0·000296, for n, 1·75, and for p 1·25.

From which, $v = 104 i^{\cdot 572} d^{\cdot 715}$,

or $\log v = 2{\cdot}017 + 0{\cdot}572 \log i + 0{\cdot}715 \log d.$

The value of p in this formula agrees with that given by Reynolds in his formula

$$i = \frac{\gamma v^n}{d^{3-n}}.$$

Professor Unwin* in 1886, by an examination of experiments on cast-iron pipes, deduced the formula, for smooth cast-iron pipes,

$$i = \frac{\cdot 0004 v^{1\cdot 87}}{d^{1\cdot 4}},$$

and for rough pipes, $$i = \frac{\cdot 0007 v^2}{d^{1\cdot 1}}.$$

M. Flamant† in 1892 examined carefully the experiments available on flow in pipes and proposed the formula,

$$i = \frac{\gamma v^{1\cdot 75}}{d^{1\cdot 25}},$$

for all classes of pipes, and suggested for γ the following values:

Lead pipes Glass „ Wrought-iron (smooth)	·000236 to ·00028,
Cast-iron new	·000336,
„ „ in service	·000417.

If the student plots from Table XVI, log d as ordinates, and log k as abscissae, it will be found, that the points all lie between two straight lines the equations to which are

$$\log k = \log \cdot 00069 - 1\cdot 25 \log d,$$

and $$\log k = \log \cdot 00028 - 1\cdot 25 \log d.$$

Further, the points for any class of pipes not only lie between these two lines, but also lie about some line nearly parallel to these lines. So that p is not very different from 1·25.

From the table, n is seen to vary from 1·70 to 2·08.

A general formula is thus obtained,

$$h = \frac{\cdot 00028 \text{ to } \cdot 00069 v^{1\cdot 70 \text{ to } 2\cdot 08}\, l}{d^{1\cdot 25}}.$$

The variations in γ, n, and p are, however, too great to admit of the formula being useful for practical purposes.

For new cast-iron pipes,

$$h = \frac{\cdot 000296 \text{ to } \cdot 000418 v^{1\cdot 84 \text{ to } 1\cdot 97}\, l}{d^{1\cdot 25}}.$$

If the pipes are lined with bitumen the smaller values of γ and n may be taken.

* *Industries*, 1886.

† *Annales des Ponts et Chaussées*, 1892, Vol. II.

For new, steel, riveted pipes,

$$h = \frac{\cdot 0004 \text{ to } \cdot 00054 v^{1\cdot 93 \text{ to } 2\cdot 08}\, l}{d^{1\cdot 25}}.$$

Fig. 94 shows the result of plotting $\log k$ and $\log d$ for all the pipes in Table XVI having a value of n between 1·92 and 1·94. They are seen to lie very close to a line having a slope of 1·25, and the ordinate of which, when d is 1 foot, is ·000364.

Therefore $\quad h = \dfrac{\cdot 000364 v^{1\cdot 93} l}{d^{1\cdot 25}}$ or $v = 59 i^{\cdot 518} d^{\cdot 647}$

very approximately expresses the law of resistance for particular pipes of wood, new cast iron, cleaned cast iron, and galvanised iron.

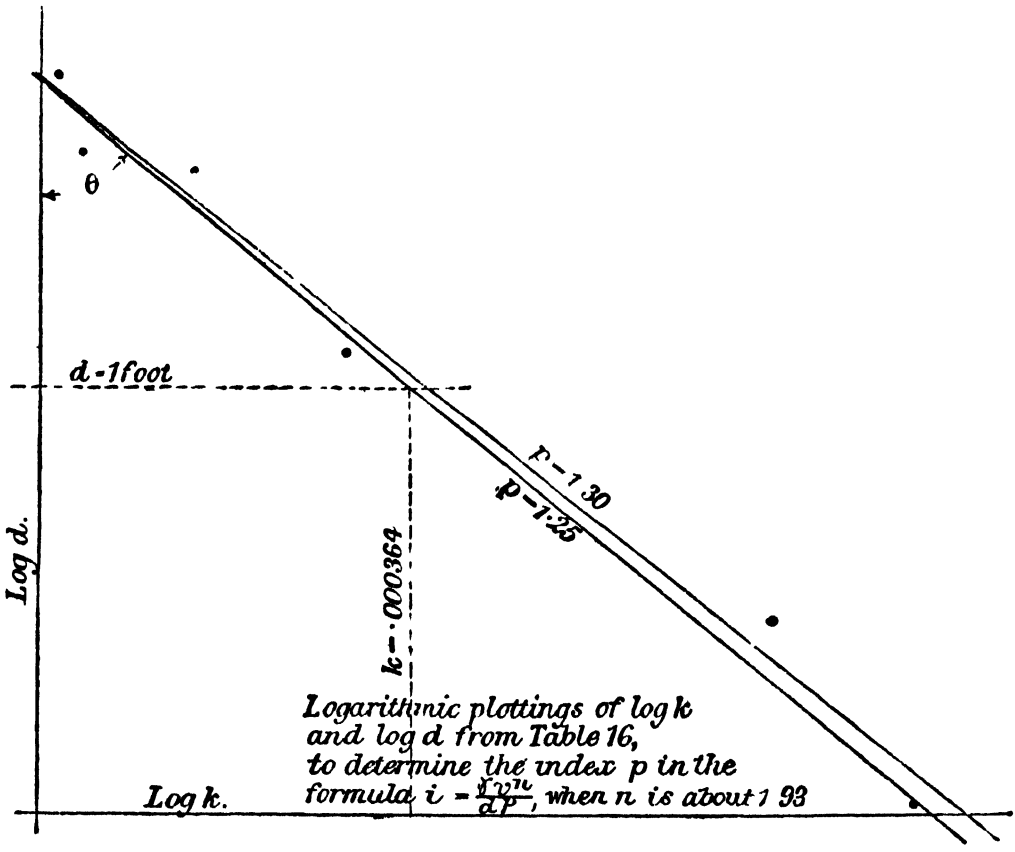

Fig. 94.

Taking a pipe 1 foot diameter and the velocity as 3 feet per second, the value of i obtained by this formula agrees with that from Darcy's formula for clear cast-iron pipes within 1 per cent.

Use of the logarithmic formula for practical calculations. A very serious difficulty arises in the use of the logarithmic formula, as to what value to give to n for any given case, and consequently it has for practical purposes very little advantage over the older and simpler formula of Chezy.

TABLE XVI.

Experimenter	Kind of pipe	Diameter (in ins.)	Velocity in ft per sec. from — to	Value of n in formula $i = kv^n$	Value of k in formula $i = kv^n$
Noble	Wood	44	3·46 — 4·415	1·73	·0001254
"	"	54	2·28 — 4·68	1·75	·000083
Marx, Wing and Hoskins	"	72·5	1 — 4	1·72	·000061
	"	72·5	1 — 5·5	1·93	·000048
Galtner Kitcham	Riveted	3		1·88	·00245
H. Smith	Wrought	11		1·81	·000515
"	iron or steel	11¾		1·90	·000470
"	"	15		1·94	·000270
Kinchling	"	38	·505— 1·254	2·0	·000099
Herschel	"	42	2·10 — 4·99	1·93	·00011
"	"	48	2 — 5 (?)	2·0	·000090
Marx, Wing and Hoskins	"	72	1 — 4	1·99	·000055
	"	72	1 — 5·5	1·85	·000077
Herschel	"	103	1 — 4·5	2·08	·000036
Darcy	Cast iron	3·22	·289—10·71	1·97	·00156
"	new	5·39	·48 —15·3	1·97	·00079
"	"	7·44	·673—16·17	1·956	·00062
"	"	12		1·779	·000323
Williams	"	16·25		1·858	·000214
Lampe	"	16·5	2·48 — 3·09	1·80	·000267
"	"	19·68	1·38 — 3·7	1·84	·00022
Sherman	"	36	4 — 7	2*	·000062
Stearns	"	48	1·243— 3·23	1·92	·0000567
Hubbell & Fenkell	"	30		2	·00003
Darcy	Cast iron	1·4136	·167— 2·077	1·99	·0098
"	old and	3·1296	·403— 3·747	1·94	·0035
"	tuberculated	9 575	1·007—12·58	1·98	·0009
Sherman	"	20	2·71 — 5·11		
"	"	36	1·1 — 4·5	2	·000105
Fitzgerald	"	48	1·176— 3·533	2·04	·000083
"	"	48	1·135— 3·412	2·00	·000085
Darcy	Cast-iron	1·4328	·371— 3·69	1·85	·0041
"	old pipes	3·1536	·633— 5·0	1·97	·00185
"	cleaned	11·68	·8 —10·368	2·0	·000375
Fitzgerald	"	48	3·67 — 5·6	2·02	·000082
"	"	48	·395— 7·245	1·94	·000059
Darcy	Sheet-iron	1·055	·098— 8·225	1·76	·0074
"	"	3·24	·328—12·78	1·81	·00154
"	"	7·72	·591—19·72	1·78	·00059
"	"	11·2	1·296—10·52	1·81	·00039
"	Gas	·48	·113— 3·92	1·83	·0278
"	"	1·55	·205— 8·521	1·86	·00418
"	"			1·91	·0072
Saph and Schoder	Galvanised	·364		1·96	·0352
"	"	·494		1·91	·0181
"	"	·623		1·86	·0132
"	"	·824		1·80	·0095
"	"	1·048		1·93	·0082
"	Hard-drawn brass	15 pipes up to 1·84		1·75	·00025 to ·00035
Reynolds	Lead			1·732	
Darcy	"	·55		1·761	·0126
"	"	1·61		1·783	·00425

TABLE XVII.

Showing reasonable values of γ, and n, for pipes of various kinds, in the formula,

$$h = \frac{\gamma v^n l}{d^{1\cdot 25}}.$$

			Reasonable values for	
	γ	n	γ	n
Clean cast-iron pipes	·00029 to ·000418	1·80 to 1·97	·00036	1·93
Old cast-iron pipes	·00047 to ·00069	1·94 to 2·04	·00060	2
Riveted pipes	·00040 to ·00054	1·93 to 2·08	·00050	2
Galvanised pipes	·00035 to ·00045	1·80 to 1·96	·00040	1·88
Sheet-iron pipes covered with bitumen	·00030 to ·00038	1·76 to 1·81	·00034	1·78
Clean wood pipes	·00056 to ·00063	1·72 to 1·75	·00060	1·75
Brass and lead pipes			·00030	1·75

When further experiments have been performed on pipes, of which the state of the internal surfaces is accurately known, and special care taken to ensure that all the loss of head in a given length of pipe is due to friction only, more definiteness may be given to the values of γ, n, and p.

Until such evidence is forthcoming the simple Chezy formula may be used with almost as much confidence as the more complicated logarithmic formula, the values of C or f being taken from Tables XII—XIV. Or the formula $i = kv^n$ may be used, values of k and n being taken from Table XVI, which most nearly fits the case for which the calculations are to be made.

104. Criticism of experiments.

The difficulty of differentiating the loss of head due to friction from other sources of loss, such as loss due to changes in direction, change in the diameter of the pipe and other causes, as well as the possibilities of error in experiments on long pipes of large diameter, makes many experiments that have been performed of very little value, and considerably increases the difficulty of arriving at correct formulae.

The author has found in many cases, when log i and log d were plotted, from the records of experiments, that, although the results seemed consistent amongst themselves, yet compared with other experiments, they seemed of little value.

The value of n for one of Couplet's* experiments on a lead and earthenware pipe being as low as 1·56, while the results of an experiment by Simpson† on a cast-iron pipe gave n as 2·5. In the latter case there were a number of bends in the pipe.

In making experiments for loss of head due to friction, it is desirable that the pipe should be of uniform diameter and as straight as possible between the points at which the pressure head is measured. Further, special care should be taken to ensure the removal of all air, and it is most essential that a perfectly steady flow is established at the point where the pressure is taken.

105. Piezometer fittings.

It is of supreme importance that the piezometer connections shall be made so that the difference in the pressures registered at any two points shall be that lost by friction, and friction only, between the points.

This necessitates that there shall be no obstructions to interfere with the free flow of the water, and it is, therefore, very essential that all burrs shall be removed from the inside of the pipe.

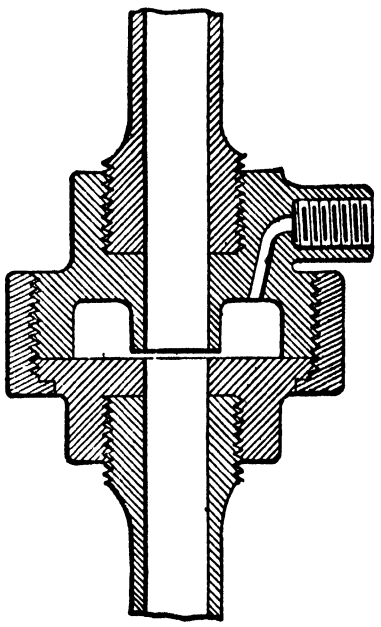

Fig. 95.

In experiments on small pipes in the laboratory the best results are no doubt obtained by cutting the pipe completely through at the connection as shown in Fig. 95, which illustrates the form of connection used by Dr Coker in the experiments cited on page 129. The two ends of the pipe are not more than $\frac{1}{200}$th of an inch apart.

Fig. 96 shows the method adopted by Marx, Wing and Hoskins in their experiments on a 72-inch wooden pipe to ensure a correct reading of the pressure.

The gauge X was connected to the top of the pipe only while Y was connected at four points as shown.

Small differences were observed in the readings of the two gauges, which they thought were due to some accidental circumstance affecting the gauge X only, as no change was observed in the reading of Y when the points of communication to Y were changed by means of the cocks.

* *Hydraulics*, Hamilton Smith, Junr.
† *Proceedings of the Institute of Civil Engineers*, 1855.

106. Effect of temperature on the velocity of flow.

Poiseuille found that by raising the temperature of the water from 50° C. to 100° C. the discharge of capillary tubes was doubled.

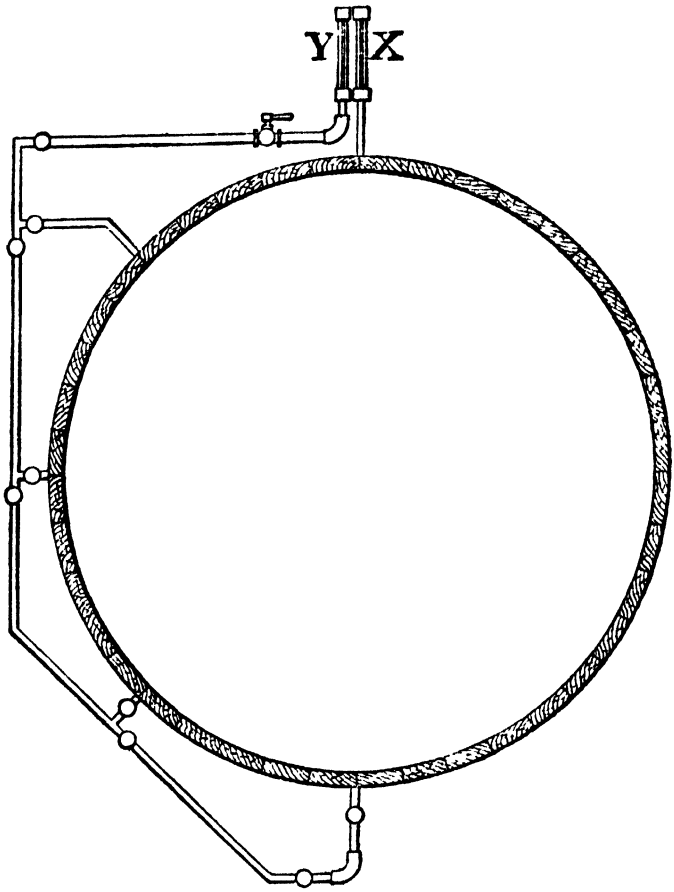

Fig. 96. Piezometer connections to a wooden pipe.

Reynolds* showed that for pipes of larger diameter, the effect of changes of the temperature was very marked for velocities below the critical velocity, but for velocities above the critical velocity the effect is comparatively small.

The reason for this is seen, at once, from an examination of Reynolds'* formula. Above the critical velocity n does not differ very much from 2, so that P^{2-n} is a small quantity compared with its value when n is 1.

Saph and Schoder†, for velocities above the critical velocity, found that, as the temperature rises, the loss of head due to friction decreases, but only in a small degree. For brass pipes of small diameter, the correction at 60° F. was about 4 per cent. per

* *Scientific Papers*, Vol. II.

† See also Barnes and Coker, *Proceedings of the Royal Society*, Vol. LXX. 1904; Coker and Clements, *Transactions of the Royal Society*, Vol. CCI. *Proceedings Am.S.C.E.* Vol. XXIX.

10 degrees F. With galvanised pipes the correction appears to be from 1 per cent. to 5 per cent. per 10 degrees F.

Since the head lost increases, as the temperature falls, the discharge for any given head diminishes with the temperature, but for practical purposes the correction is generally negligible.

107. *Loss of head due to bends and elbows.

The loss of head due to bends and elbows in a long pipe is generally so small compared with the loss of head due to friction in the straight part of the pipe, that it can be neglected, and consequently the experimental determination of this quantity has not received much attention.

Weisbach†, from experiments on a pipe $1\frac{1}{4}$ inches diameter, with bends of various radii, expressed the loss of head as

$$h_B = \left(\cdot 065 + \frac{\cdot 923r}{R}\right)\frac{v^2}{2g},$$

r being the radius of the pipe, R the radius of the bend on the centre line of the pipe and v the velocity of the water in feet per second. If the formula be written in the form

$$h_B = \frac{av^2}{2g},$$

the table shows the values of a for different values of $\frac{r}{R}$.

$\frac{r}{R}$	a
·1	·157
·2	·250
·5	·526

St Venant‡ has given as the loss of head h_B at a bend,

$$h_B = \cdot 00152\frac{l}{R}\sqrt{\frac{d}{R}}v^2 = 0\cdot 1\frac{v^2}{2g}\frac{l}{R}\sqrt{\frac{d}{R}} \text{ nearly,}$$

l being the length of the bend measured on the centre line of the bend and d the diameter of the pipe.

When the bend is a right angle

$$\frac{l}{R}\sqrt{\frac{d}{R}} = \frac{\pi}{2}\sqrt{\frac{d}{R}}.$$

When $\frac{d}{R} = 1, \quad \cdot 5, \quad \cdot 2,$

$\frac{\pi}{2}\sqrt{\frac{d}{R}} = 1\cdot 57, \quad 1\cdot 11, \quad \cdot 702$

and $h_B = \cdot 157\frac{v^2}{2g}, \quad \cdot 111\frac{v^2}{2g}, \quad \cdot 07\frac{v^2}{2g}.$

* See page 525. † *Mechanics of Engineering.*
‡ *Comptes Rendus*, 1862.

Recent experiments by Williams, Hubbell and Fenkell* on cast-iron pipes asphalted, by Saph and Schoder on brass pipes, and others by Alexander† on wooden pipes, show that the loss of head in bends, as in a straight pipe, can be expressed as

$$h_B = kv^n,$$

n being a variable for different kinds of pipes, while

$$k = \frac{\gamma l \left(\frac{r}{R}\right)^m}{d^p},$$

γ being a constant coefficient for any pipe.

For the cast-iron pipes of Hubbell and Fenkell, γ, n, m, and p have approximately the following values.

Diameter of pipe	γ	m	n	p
12″	·0040	0·83	1·78	1·09
16″	"	"	1 86	"
30″	"	"	2·0	"

When v is 3 feet per second and $\frac{r}{R}$ is $\frac{1}{4}$, the bend being a right angle, the loss of head as calculated by this formula for the 12-inch pipe is $\frac{\cdot 2068 v^2}{2g}$, and for the 30-inch pipe $\frac{\cdot 238 v^2}{2g}$.

For the brass pipes of Saph and Schoder, 2 inches diameter, Alexander found,

$$h_B = \cdot 00858 \left(\frac{r}{R}\right)^{\cdot 83} lv^{1\cdot 76},$$

and for varnished wood pipes when $\frac{r}{R}$ is less than 0·2,

$$h_B = \cdot 008268 \left(\frac{r}{R}\right)^{\cdot 83} lv^{1\cdot 77},$$

and when $\frac{r}{R}$ is between 0·2 and 0·5,

$$h_B = \cdot 124 \left(\frac{r}{R}\right)^{2\cdot 5} lv^{1\cdot 77}.$$

He further found for varnished wood pipes that, a bend of radius equal to 5 times the radius of the pipe gives the minimum loss of head, and that its resistance is equal to a straight pipe 3·38 times the length of the bend.

Messrs Williams, Hubbell and Fenkell also state at the end of their elaborate paper, that a bend having a radius equal to 2½

* *Proc. Amer. Soc. Civil Engineers*, Vol. XXVII. † *Proc. Inst. Civil Engineers*, Vol. CLIX. See also *Bulletin* No. 576 *University of Wisconsin.*

diameters, offers less resistance to the flow of water than those of longer radius. It should not be overlooked, however, that although the loss of head in a bend of radius equal to* $2\frac{1}{2}$ diameters of the pipe is less than for any other, it does not follow that the loss of head per unit length of the pipe measured along its centre line has its minimum value for bends of this radius.

108. Variations of the velocity at the cross section of a cylindrical pipe.

Experiments show that when water flows through conduits of any form, the velocities are not the same at all points of any transverse section, but decrease from the centre towards the circumference.

The first experiments to determine the law of the variation of the velocity in cylindrical pipes were those of Darcy, the pipes varying in diameter from 7·8 inches to 19 inches. A complete account of the experiments is to be found in his *Recherches Expérimentales dans les tuyaux.*

The velocity was measured by means of a Pitot tube at five points on a vertical diameter, and the results plotted as shown in Fig. 97.

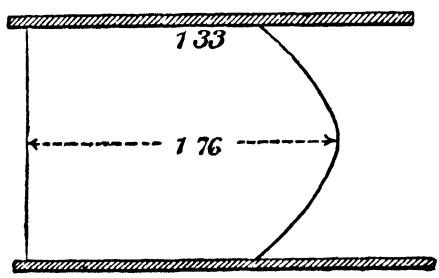

Fig. 97.

Calling V the velocity at the centre of a pipe of radius R, u the velocity at the circumference, v_m the mean velocity, v the velocity at any distance r from the centre, and i the loss of head per unit length of the pipe, Darcy deduced the formulae

$$V - v = \frac{k}{R} r^{\frac{3}{2}} \sqrt{i}$$

and

$$v_m = \frac{3V + 4u}{7} = V - \frac{4}{7} k \sqrt{Ri}.$$

When the unit is the metre the value of k is 11·3, and 20·4 when the unit is the English foot.

Later experiments commenced by Darcy and continued by Bazin, on the distribution of velocity in a semicircular channel, the surface of the water being maintained at the horizontal diameter, and in which it was assumed the conditions were similar to those in a cylindrical pipe, showed that the velocity near the surface of the pipe diminished much more rapidly than indicated by the formula of Darcy.

* See Appendix 3.

Bazin substituted therefore a new formula,

$$V - v = 38\sqrt{Ri}\left(\frac{r}{R}\right)^3 \text{'} \quad \text{.....(1)},$$

or since

$$v_m = C\sqrt{mi} = \frac{C}{\sqrt{2}}\sqrt{Ri}$$

$$\frac{V - v}{v_m} = \frac{53{\cdot}8}{C}\left(\frac{r}{R}\right)^3 \quad \text{.....(2)}.$$

It was open to question, however, whether the conditions of flow in a semicircular pipe are similar to those in a pipe discharging full bore, and Bazin consequently carried out at Dijon* experiments on the distribution of velocity in a cement pipe, 2·73 feet diameter, the discharge through which was measured by means of a weir, and the velocities at different points in the transverse section by means of a Pitot tube†.

From these experiments Bazin concluded that both formulae (1) and (2) were incorrect and deduced the three formulae

$$V - v = 38\sqrt{Ri}\left\{\left(\frac{r}{R}\right)^2 - \left(\frac{r}{R}\right)^3 + \left(\frac{r}{R}\right)^4\right\} \quad \text{.....(3)},$$

$$V - v = \sqrt{Ri}\left\{38\left(\frac{r}{R}\right)^3 + 49\left(\frac{r}{R}\right)^2\left(1 - 1{\cdot}1\frac{r}{R}\right)^2\right. \quad \text{.....(4)},$$

$$V - v = \sqrt{Ri}\,53{\cdot}5\left\{1 - \sqrt{1 - {\cdot}95\left(\frac{r}{R}\right)^2}\right\} \quad \text{.....(5)},$$

the constants in these formulae being obtained from Bazin's by changing the unit from 1 metre to the English foot.

Equation (5) is the equation to an ellipse to which the sides of the pipes are not tangents but are nearly so, and this formula gives values of v near to the surface of the pipe, which agree much more nearly with the experimental values, than those given by any of the other formulae.

Experiments of Williams, Hubbell and Fenkell‡. An elaborate series of experiments by these three workers have been carried out to determine the distribution of velocity in pipes of various diameters, Pitot tubes being used to determine the velocities.

The pipes at Detroit were of cast iron and had diameters of 12, 16, 30 and 42 inches respectively.

The Pitot tubes§ were calibrated by preliminary experiments on the flow through brass tubes 2 inches diameter, the total

* "Memoire de l'Académie des Sciences de Paris, Recueil des Savants Etrangères," Vol. XXXII. 1897. *Proc. Am.S.C.E.* Vol. XXVII. p. 1042.

† See page 241.

‡ "Experiments at Detroit, Mich., on the effect of curvature on the flow of water in pipes," *Proc. Am.S.C.E.* Vol. XXVII. p. 313.

§ See page 246.

discharge being determined by weighing, and the mean velocity thus determined. From the results of their experiments they came to the conclusion that the curve of velocities should be an ellipse to which the sides of the pipe are tangents, and that the velocity at the centre of the pipe V is $1{\cdot}19v_m$, v_m being the mean velocity.

These results are consistent with those of Bazin. His experimental value for $\frac{V}{v_m}$ for the cement pipe was 1·1675, and if the constant ·95, in formula (5), be made equal to 1, the velocity curve becomes an ellipse to which the walls of the pipe are tangents.

The ratio $\frac{V}{v_m}$ can be determined from any of Bazin's formulae.

Substituting $\frac{\sqrt{2}v_m}{C}$ for $\sqrt{Ri}$ in (1), (3), (4) or (5), the value of v at radius r can be expressed by any one of them as

$$v = V - \frac{\sqrt{2}v_m}{C} f\left(\frac{r}{R}\right).$$

Then, since the flow past any section in unit time is $v_m \pi R^2$, and that the flow is also equal to

$$\int_0^R 2\pi r\,dr\,.\,v,$$

therefore
$$v_m \pi R^2 = 2\pi \int_0^R \left\{V - \frac{\sqrt{2}v_m}{C} f\left(\frac{r}{R}\right)\right\} r\,dr \quad \text{.....(6).}$$

Substituting for $f\left(\frac{r}{R}\right)$, its value $\frac{38r^3}{R^3}$ from equation (1), and integrating,

$$\frac{V}{v_m} = 1 + \frac{21{\cdot}5}{C} \quad \text{.....(7),}$$

and by substitution of $f\left(\frac{r}{R}\right)$ from equation (4),

$$\frac{V}{v_m} = 1 + \frac{23}{C} \quad \text{.....(8),}$$

so that the ratio $\frac{V}{v_m}$ is not very different when deduced from the simple formula (2) or the more complicated formula (4).

When C has the values

$$C = 80, \quad 100, \quad 120,$$

from (8)
$$\frac{V}{v_m} = 1{\cdot}287,\ 1{\cdot}23,\ 1{\cdot}19.$$

The value of C, in the 30-inch pipe referred to above, varied between 109·6 and 123·4 for different lengths of the pipe, and

the mean value was 116, so that there is a remarkable agreement between the results of Bazin, and Williams, Hubbell and Fenkell.

The velocity at the surface of a pipe. Assuming that the velocity curve is an ellipse to which the sides of the pipe are tangents, as in Fig. 98, and that $V = 1{\cdot}19v_m$, the velocity at the surface of the pipe can readily be determined.

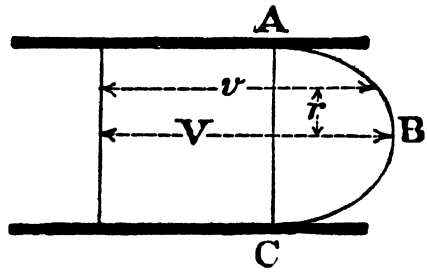

Fig. 98.

Let u = the velocity at the surface of the pipe and v the velocity at any radius r.

Let the equation to the ellipse be

$$\frac{r^2}{R^2} + \frac{x^2}{b^2} = 1$$

in which $$x = v - u,$$

and $$b = V - u.$$

Then, if the semi-ellipse be revolved about its horizontal axis, the volume swept out by it will be $\frac{2}{3}\pi R^2 b$, and the volume of discharge per second will be

$$\pi R^2 v_m = \int_0^R 2\pi r dr \,.\, v = \pi R^2 \,.\, u + \tfrac{2}{3}\pi R^2 b,$$

$$\therefore\ v_m = u + \tfrac{2}{3}(V - u) = \tfrac{1}{3}u + \tfrac{2}{3} \times 1{\cdot}19 v_m,$$

and $$u = {\cdot}621 v_m.$$

Using Bazin's elliptical formula, the values of $\frac{u}{v_m}$ for

$$C = 80, \quad 100, \quad 120,$$

are $$\frac{u}{v_m} = {\cdot}552, \ {\cdot}642, \ {\cdot}702.$$

The velocities, as above determined, give the velocity of translation in a direction parallel to the pipe, but as shown by Reynolds' experiments the particles of water may have a much more complicated motion than here assumed.

109. Head necessary to give the mean velocity v_m to the water in the pipe.

It is generally assumed that the head necessary to give a mean velocity v_m to the water flowing in a pipe is $\frac{v_m^2}{2g}$, which would be correct if all the particles of water had a common velocity v_m.

If, however, the form of the velocity curve is known, and on the assumption that the water is moving in stream lines with definite velocities parallel to the axis of the pipe, the actual head can be determined by calculating the mean kinetic energy per lb. of water flowing in the pipe, and this is slightly greater than $\frac{v_m^2}{2g}$.

As before, let v be the velocity at radius r.

The kinetic energy of the quantity of water which flows past any section per second

$$= \int_0^R w \,.\, 2\pi r\,dr \,.\, v \,.\, \frac{v^2}{2g},$$

w being the weight of 1 c. ft. of water.

The kinetic energy per lb., therefore,

$$= \frac{\int_0^R \frac{w \,.\, 2\pi r\,dr v^3}{2g}}{\int_0^R w \,.\, 2\pi r\,dr v}$$

$$= \frac{\frac{2}{2g}\int_0^R \left\{V - \frac{\sqrt{2}v_m}{C} f\left(\frac{r}{R}\right)\right\}^3 r\,dr}{v_m R^2} \quad \text{.....(9).}$$

The simplest value for $f\left(\frac{r}{R}\right)$ is that of Bazin's formula (1) above, from which

$$V = v_m\left(1 + \frac{21{\cdot}5}{C}\right)$$

and

$$f\left(\frac{r}{R}\right) = 38\,\frac{r^3}{R^3}.$$

Substituting these values and integrating, the kinetic energy per lb. is $\frac{av_m^2}{2g}$, and when

C is 80, 100,

a is 1·12, 1·076.

On the assumption that the velocity curve is an ellipse to which the walls of the pipe are tangents the integration is easy, and the value of a is 1·047.

Using the other formulae of Bazin the calculations are tedious and the values obtained differ but slightly from those given.

The head necessary to give a mean velocity v_m to the water in the pipe may therefore be taken to be $\frac{av_m^2}{2g}$, the value of a being about 1·12. This value* agrees with the value of 1·12 for a, obtained by M. Boussinesq, and with that of M. J. Delemer who finds for a the value 1·1346.

110. Practical problems.

Before proceeding to show how the formulae relating to the loss of head in pipes may be used for the solution of various problems, it will be convenient to tabulate them.

* Flamant's *Hydraulique*.

NOTATION.

h = loss of head due to friction in a length l of a straight pipe.

i = the virtual slope $= \frac{h}{l}$.

v = the mean velocity of flow in the pipe.

d = the diameter.

m = the hydraulic mean depth

$= \frac{\text{Area}}{\text{Wetted Perimeter}} = \frac{A}{P} = \frac{d}{4}$ when the pipe is cylindrical and full

Formula 1. $$h = \frac{v^2 l}{C^2 m} = \frac{4v^2 l}{C^2 d}.$$

This may be written $$\frac{h}{l} = \frac{v^2}{C^2 m},$$

or $$v = C\sqrt{mi}.$$

The values of C for cast-iron and steel pipes are shown in Tables XII and XIV.

Formula 2. $$h = \frac{4flv^2}{2g \cdot d},$$

$\frac{f}{2g}$ in this formula being equal to $\frac{1}{C^2}$ of formula (1).

Values of f are shown in Table XIII.

Either of these formulae can conveniently be used for calculating h, v, or d when f, and l, and any two of three quantities h, v, and d, are known.

Formula 3. As values of C and f cannot be remembered for variable velocities and diameters, the formulae of Darcy are convenient as giving results, in many cases, with sufficient accuracy. For smooth clean cast-iron pipes

$$h = \cdot 005\left(1 + \frac{1}{12d}\right)\frac{4v^2 l}{2g \cdot d},$$

or $$v = 197\sqrt{\frac{d}{12d+1}}\sqrt{di}$$

$$= 394\sqrt{\frac{d}{12d+1}}\sqrt{mi}.$$

For rough and dirty pipes

$$h = 0{\cdot}01\left(1 + \frac{1}{12d}\right)\frac{4v^2 l}{2g \cdot d},$$

or $$v = 139\sqrt{\frac{d}{12d+1}}\sqrt{di}$$

$$= 278\sqrt{\frac{d}{12d+1}}\sqrt{mi}.$$

If d is the unknown, Darcy's formulae can only be used to solve for d by approximation. The coefficient $\left(1+\frac{1}{12d}\right)$ is first neglected and an approximate value of d determined. The coefficient can then be obtained from this approximate value of d with a greater degree of accuracy, and a new value of d can then be found, and so on. (See examples.)

Formula 4. Known as the logarithmic formula.

$$h=\frac{\gamma \cdot v^n l}{d^p},$$

or

$$\frac{h}{l}=i=\frac{\gamma \cdot v^n}{d^p}.$$

Values of γ, n, and p are given on page 138.

By taking logarithms

$$\log h=\log \gamma+n \log v+\log l-p \log d,$$

from which h can be found if l, v, and d are known.

If h, l, and d are known, by writing the formula as

$$n \log v=\log h-\log l-\log \gamma+p \log d,$$

v can be found.

If h, l, and v are known, d can be obtained from

$$p \log d=\log \gamma+n \log v+\log l-\log h.$$

This formula is a little more cumbersome to use than either (1) or (2) but it has the advantage that γ is constant for all velocities.

Formula 5. The head necessary to give a mean velocity v to the water flowing along the pipe is about $\frac{1{\cdot}12v^2}{2g}$, but it is generally convenient and sufficiently accurate to take this head as $\frac{v^2}{2g}$, as was done in Fig. 87. Unless the pipe is short this quantity is negligible compared with the friction head.

Formula 6. The loss of head at the sharp-edged entrance to a pipe is about $\frac{{\cdot}5v^2}{2g}$ and is generally negligible.

Formula 7. The loss of head due to a sudden enlargement in a pipe where the velocity changes from v_1 to v_2 is $\frac{(v_1-v_2)^2}{2g}$.

Formula 8. The loss of head at bends and elbows is a very variable quantity. It can be expressed as equal to $\frac{av^2}{2g}$ in which a varies from a very small quantity to unity.

Problem 1. The difference in level of the water in two reservoirs is h feet, Fig. 99, and they are connected by means of a straight pipe of length l and diameter d; to find the discharge through the pipe.

Let Q be the number of cubic feet discharged per second. The head h is utilised in giving velocity to the water and in overcoming resistance at the entrance to the pipe and the frictional resistances.

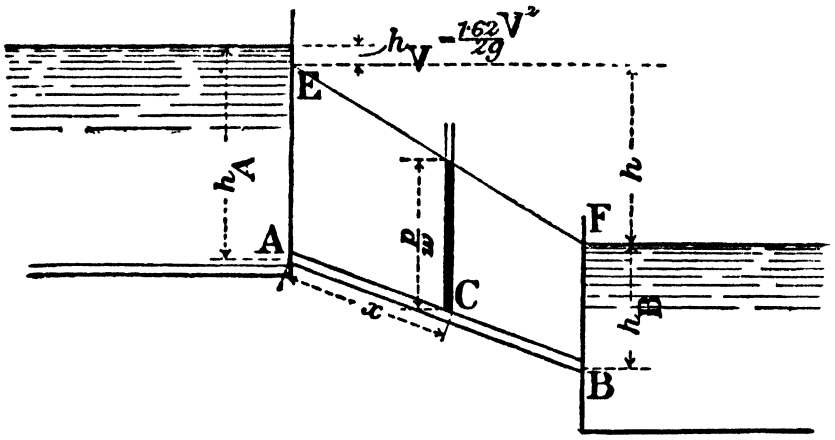

Fig. 99. Pipe connecting two reservoirs.

Let v be the mean velocity of the water. The head necessary to give the water this mean velocity may be taken as $\frac{1 \cdot 12v^2}{2g}$, and to overcome the resistance at the entrance $\frac{\cdot 5v^2}{2g}$.

Then
$$h = \frac{1 \cdot 12v^2}{2g} + \frac{\cdot 5v^2}{2g} + \frac{4flv^2}{2g \cdot d}.$$

Or using in the expression for friction, the coefficient C,
$$h = \cdot 0174v^2 + \cdot 0078v^2 + \frac{4lv^2}{C^2 d}$$
$$= \cdot 025v^2 + \frac{4lv^2}{C^2 d}.$$

If $\frac{l}{d}$ is greater than 300 the head lost due to friction is generally great compared with the other quantities, and these may be neglected.

Then
$$h = \frac{4flv^2}{2gd} = \frac{4lv^2}{C^2 \cdot d},$$

and
$$v = \frac{C}{2}\sqrt{\frac{dh}{l}}.$$

As the velocity is not known, the coefficient C cannot be obtained from the table, but an approximate value can be assumed, or Darcy's value

$$C = 394\sqrt{\frac{d}{12d+1}} \text{ for clean pipes,}$$

and
$$C = 278\sqrt{\frac{d}{12d+1}} \text{ if the pipe is dirty,}$$

can be taken.

An approximation to v—which in many cases will be sufficiently near or will be as near probably as the coefficient can be known—is thus obtained. From the table a value of C for this velocity can be taken and a nearer approximation to v determined.

Then
$$Q = \frac{\pi}{4} d^2 \cdot v.$$

The velocity can be deduced directly from the logarithmic formula $h = \frac{\gamma v^n l}{d^{1 \cdot 25}}$, provided γ and n are known for the pipe.

The hydraulic gradient is EF.

At any point C distant x from A the pressure head $\frac{p}{w}$ is equal to the distance between the centre of the pipe and the hydraulic gradient. The pressure head just inside the end A of the pipe is $h_A - \frac{1 \cdot 62 v^2}{2g}$, and at the end B the pressure head must be equal to h_B. The head lost due to friction is h, which, neglecting the small quantity $\frac{1 \cdot 62 v^2}{2g}$, is equal to the difference of level of the water in the two tanks.

Example 1. A pipe 3 inches diameter 200 ft. long connects two tanks, the difference of level of the water in which is 10 feet, and the pressure is atmospheric. Find the discharge assuming the pipe dirty.

$$m = \frac{d}{4} = \tfrac{1}{16}'.$$

Using Darcy's coefficient

$$v = 278 \sqrt{\frac{\frac{1}{4}}{3+1}} \sqrt{\tfrac{10}{200} \cdot \tfrac{1}{16}} = 69 \cdot 5 \sqrt{\tfrac{1}{320}}$$

$$= 3 \cdot 88 \text{ ft. per sec.}$$

For a pipe 3 inches diameter, and this velocity, C from the table is about 69, so that the approximation is sufficiently near.

Taking
$$h = \frac{\cdot 00064 v^{1 \cdot 94} . l}{d^{1 \cdot 25}},$$
$$v = 3 \cdot 88 \text{ ft. per sec.},$$
$$h = \frac{\cdot 0006 v^2 l}{d^{1 \cdot 25}},$$
gives
$$v = 3 \cdot 85 \text{ ft. per sec.}$$

Example 2. A pipe 18 inches diameter brings water from a reservoir 100 feet above datum. The total length of the pipe is 15,000 feet and the last 5000 feet are at the datum level. For this 5000 feet the water is drawn off by service pipes at the uniform rate of 20 cubic feet per minute, per 500 feet length. Find the pressure at the end of the pipe.

The total quantity of flow per minute is

$$Q = \frac{5000 \times 20}{500} = 200 \text{ cubic feet per minute.}$$

Area of the pipe is 1·767 sq. feet.

The velocity in the first 10,000 feet is, therefore,

$$v = \frac{200}{60 \times 1 \cdot 767} = 1 \cdot 888 \text{ ft. per sec.}$$

The head lost due to friction in this length, is

$$h = \frac{4 . f . 10{,}000 . 1 \cdot 888^2}{2g . 1 \cdot 5}.$$

In the last 5000 feet of the pipe the velocity varies uniformly. At a distance x feet from the end of the pipe the velocity is $\frac{1 \cdot 888 x}{5000}$.

In a length dx the head lost due to friction is

$$dh = \frac{4 . f . 1 \cdot 888^2 . x^2 dx}{2g . 1 \cdot 5 . 5000^2},$$

and the total loss by friction is

$$h_0 = \frac{4f . 1 \cdot 888^2}{2g . 1 \cdot 5 . 5000^2} \int_0^{5000} x^2 dx = \frac{4f . (1 \cdot 888)^2}{2g . 1 \cdot 5} . \frac{5000}{3}.$$

The total head lost due to friction in the whole pipe is, therefore,

$$H = \frac{4f}{2g . 1 \cdot 5} . 1 \cdot 888^2 (10{,}000 + \tfrac{5000}{3}).$$

Taking f as ·0082, $H = 14{\cdot}3$ feet.

Neglecting the velocity head and the loss of head at entrance, the pressure head at the end of the pipe is $(100 - H)$ feet $= 85{\cdot}7$ feet.

Problem 2. Diameter of pipe to give a given discharge.

Required the diameter of a pipe of length l feet which will discharge Q cubic feet per second between the two reservoirs of the last problem.

Let v be the mean velocity and d the diameter of the pipe.

Then
$$v = \frac{Q}{\frac{\pi}{4}d^2} \quad \text{.....} \quad (1),$$

and
$$h = {\cdot}025v^2 + \frac{4lv^2}{C^2d}.$$

Therefore,
$$\frac{Q}{\frac{\pi}{4}d^2} = \sqrt{\frac{h}{{\cdot}025 + \frac{4l}{C^2d}}}.$$

Squaring and transposing,
$$d^5 - \frac{0{\cdot}0406 \,.\, Q^2d}{h} = \frac{6{\cdot}5lQ^2}{C^2h} \quad \text{.....} \quad (2).$$

If l is long compared with d,
$$\frac{Q}{\frac{\pi}{4}d^2} = C\sqrt{\frac{dh}{4l}},$$

and
$$d^{\frac{5}{2}} = \frac{2{\cdot}55Q}{C}\sqrt{\frac{l}{h}} \quad \text{.....} \quad (3).$$

Since v and d are unknown C is unknown, and a value for C must be provisionally assumed.

Assume C is 100 for a new pipe and 80 for an old pipe, and solve equation (3) for d.

From (1) find v, and from the tables find the value of C corresponding to the values of d and v thus determined.

If C differs much from the assumed value, recalculate d and v using this second value of C, and from the tables find a third value for C. This will generally be found to be sufficiently near to the second value to make it unnecessary to calculate d and v a third time.

The approximation, assuming the values of C in the tables are correct, can be taken to any degree of accuracy, but as the values of C are uncertain it will not as a rule be necessary to calculate more than two values of d.

Logarithmic formula. If the formula $h = \frac{\gamma v^n l}{d^p}$ be used, d can be found direct, from
$$p \log d = n \log v + \log \gamma + \log l - \log h.$$

Example 3. Find the diameter of a steel riveted pipe, which will discharge 14 cubic feet per second, the loss of head by friction being 2 feet per mile. It is assumed that the pipe has become dirty and that provisionally $C = 110$.

From equation (3)
$$d^{\frac{5}{2}} = \frac{2{\cdot}55 \,.\, 14}{110} \cdot \sqrt{\frac{5280}{2}},$$

or
$$\tfrac{5}{2} \log d = \log 16{\cdot}63,$$

therefore
$$d = 3{\cdot}08 \text{ feet.}$$

For a thirty-eight inch pipe Kuichling found C to be 113.

The assumption that C is 110 is nearly correct and the diameter may be taken as 37 inches.

Using the logarithmic formula
$$h = \frac{{\cdot}00045v^{1{\cdot}95}l}{d^{1{\cdot}25}},$$

and substituting for v the value $\dfrac{Q}{\frac{\pi}{4}d^2}$,

$$h=\frac{\cdot 00045Q^{1\cdot 95}l}{\left(\frac{\pi}{4}\right)^{1\cdot 95}d^{5\cdot 15}},$$

from which

$$5\cdot 15\log d=\log \cdot 00045-1\cdot 95\log 0\cdot 7854+1\cdot 95\log 14+\log 2640,$$

and $$d=3\cdot 07 \text{ feet.}$$

Short pipe. If the pipe is short so that the velocity head and the head lost at entrance are not negligible compared with the loss due to friction, the equation

$$d^5-\frac{\cdot 0406Q^2d}{h}=\frac{6\cdot 5lQ^2}{C^2h},$$

when a value is given to C, can be solved graphically by plotting two curves

$$y=d^5,$$

and $$y_1=\frac{\cdot 0406Q^2}{h}\,.\,d+\frac{6\cdot 5lQ^2}{C^2h}.$$

The point of intersection of the two curves will give the diameter d.

It is however easier to solve by approximation in the following manner.

Neglect the term in d and solve as for a long pipe.

Choose a new value for C corresponding to this approximate diameter, and the velocity corresponding to it, and then plot three points on the curve $y=d^5$, choosing values of d which are nearly equal to the calculated value of d, and two points of the straight line

$$y_1=\frac{\cdot 0406Q^2d}{h}+\frac{6\cdot 5lQ^2}{C^2h}.$$

The curve $y=d^5$ between the three points can easily be drawn, as in Fig. 100, and where the straight line cuts the curve, gives the required diameter.

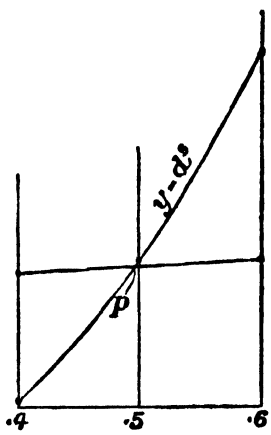

Fig. 100.

Example 4. One hundred and twenty cubic feet of water are to be taken per minute from a tank through a cast-iron pipe 100 feet long, having a square-edged entrance. The total head is 10 feet. Find the diameter of the pipe.

Neglecting the term in d and assuming C to be 100,

$$d^5=\frac{6\cdot 5\,.\,100\,.\,4}{100\,.\,100\,.\,10}=\cdot 026,$$

and $$d=\cdot 4819 \text{ feet.}$$

Therefore $$v=\frac{2}{\frac{\pi}{4}(\cdot 4819)^2}=10\cdot 9 \text{ ft. per sec.}$$

From Table XII, the value of C is seen to be about 106 for these values of d and v.

A second value for d^5 is

$$d^5=\frac{6\cdot 5\,.\,100\,.\,4}{106^2\,.\,10}=\cdot 0233,$$

from which $$d=\cdot 476'.$$

The schedule shows the values of d^5 and y for values of d not very different from the calculated value, and taking C as 106.

d	·4	·5	·6
d^5	·01024	·03125	·0776
y_1	·0297		·0329

The line and curve plotted in Fig. 100, from this schedule, intersect at p for which

$$d=\cdot 498 \text{ feet.}$$

It is seen therefore that taking 106 as the value of C, neglecting the term in d, makes an error of ·022′ or ·264″.

This problem shows that when the ratio $\frac{l}{d}$ is about 200, and the virtual slope is even as great as $\frac{1}{10}$, for all practical purposes, the friction head only need be considered. For smaller values of the ratio $\frac{l}{d}$ the quantity $\cdot 025v^2$ may become important, but to what extent will depend upon the slope of the hydraulic gradient.

The logarithmic formula may be used for short pipes but it is a little more cumbersome.

Using the logarithmic formula to express the loss of head for short pipes with square-edged entrance,

$$h = \cdot 025v^2 + \frac{\gamma v^n l}{d^{1\cdot 25}}$$

$$= \frac{\cdot 025Q^2}{\left(\frac{\pi}{4}\right)^2 d^4} + \frac{\gamma \,.\, Q^n \,.\, l}{\left(\frac{\pi}{4}\right)^n d^{2n+1\cdot 25}},$$

or

$$d^{2n+1\cdot 25} - \frac{\cdot 0406Q^2 d^{2n-2\cdot 75}}{h} = \frac{\gamma \;\; Q^n \;\; l}{\left(\frac{\pi}{4}\right)^n h}.$$

When suitable values are given to γ and n, this can be solved by plotting the two curves

$$y = d^{2n+1\cdot 25},$$

and

$$y_1 = \frac{\cdot 0406Q^2 d^{2n-2\cdot 75}}{h} + \frac{\gamma \,.\, Q^n \;\; l}{\left(\frac{\pi}{4}\right)^n h},$$

the intersection of the two curves giving the required value of d.

Problem 3. To find what the discharge between the reservoirs of problem (1) would be, if for a given distance l_1 the pipe of diameter d is divided into two branches laid side by side having diameters d_1 and d_2, Fig. 101.

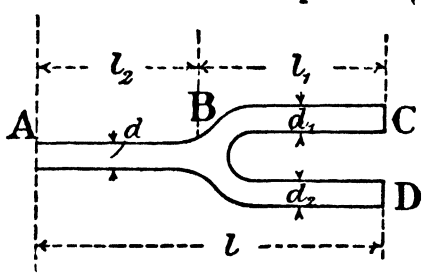

Fig. 101.

Assume all the head is lost in friction.

Let Q_1 be the discharge in cubic feet.

Then, since both the branches BC and BD are connected at B and to the same reservoir, the head lost in friction must be the same in BC as in BD, and if there were any number of branches connected at B the head lost in them all would be the same.

The case is analogous to that of a conductor joining two points between which a definite difference of potential is maintained, the conductor being divided between the points into several circuits in parallel.

The total head lost between the reservoirs is, therefore, the head lost in AB together with the head lost in any one of the branches.

Let v be the velocity in AB, v_1 in BC and v_2 in BD.

Then $$vd^2 = v_1 d_1^2 + v_2 d_2^2 \quad \text{.....(1)},$$

and the difference of level between the reservoirs

$$h = \frac{4l_2 v^2}{C^2 d} + \frac{4l_1 v_1^2}{C_1^2 d_1} \quad \text{.....(2)}.$$

And since the head lost in BC is the same as in BD, therefore,

$$\frac{4l_1 v_1^2}{C_1^2 d_1} = \frac{4l_1 v_2^2}{C_2^2 d_2} \quad \text{.....(3)}.$$

If provisionally C_1 be taken as equal to C_2,

$$v_2 = v_1 \sqrt{\frac{d_2}{d_1}}.$$

Therefore, $$vd^2 = v_1 d_1^2 + v_1 d_2^2 \sqrt{\frac{d_2}{d_1}},$$

and $$v_1 = \frac{v \cdot d^2}{d_1^2 + d_2^2 \sqrt{\frac{d_2}{d_1}}} \quad \text{.....(4).}$$

From (2), v can be found by substituting for v_1 from (4), and thus Q_1 can be determined.

If AB, BC, and BD are of the same diameter and l_1 is equal to l_2, then

$$v_1 = v_2 = \tfrac{1}{2}v,$$

and $$h = \frac{4l_1v^2}{C^2d}\left(1+\tfrac{1}{4}\right)$$

$$= \tfrac{5}{8} \cdot \frac{lv^2}{C^2d},$$

$$Q_1 = Q\sqrt{\tfrac{5}{8}}.$$

Problem 4. *Pipes connecting three reservoirs.* As in Fig. 102, let three pipes AB, BC, and BD, connect three reservoirs A, C, D, the level of the water in each of which remains constant.

Let v_1, v_2, and v_3 be the velocities in AB, BC, and BD respectively, Q_1, Q_2, and Q_3 the quantities flowing along these pipes in cubic feet per sec., l_1, l_2, and l_3 the lengths of the pipes, and d_1, d_2 and d_3 their diameters.

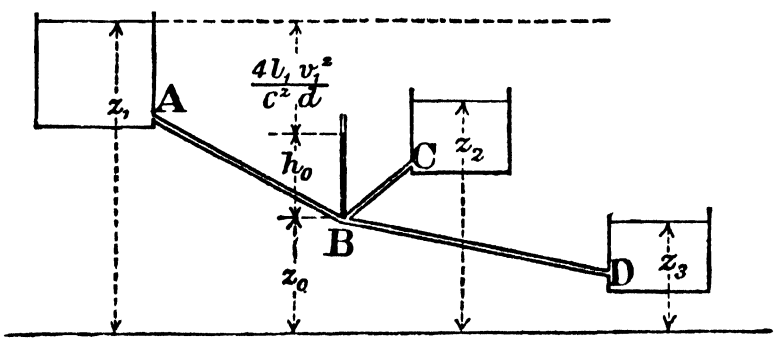

Fig. 102.

Let z_1, z_2, and z_3 be the heights of the surfaces of the water in the reservoirs, and z_0 the height of the junction B above some datum.

Let h_0 be the pressure head at B.

Assume all losses, other than those due to friction in the pipes, to be negligible.

The head lost due to friction for the pipe AB is

$$\frac{4l_1v_1^2}{C_1^2d_1} = z_1 - (z_0 + h_0) \quad \text{.....(1),}$$

and for the pipe BC, $$\frac{4l_2v_2^2}{C_2^2d_2} = \pm z_2 \mp (z_0 + h_0) \quad \text{.....(2),}$$

the upper or lower signs being taken, according as to whether the flow is from, or towards, the reservoir C.

For the pipe BD the head lost is

$$\frac{4l_3v_3^2}{C_3^2d_3} = z_0 + h_0 - z_3 \quad \text{.....(3).}$$

Since the flow from A and C must equal the flow into D, or else the flow from A must equal the quantity entering C and D, therefore,

$$Q_1 \pm Q_2 = Q_3,$$

or $$v_1d_1^2 \pm v_2d_2^2 = v_3d_3^2 \quad \text{.....(4).}$$

There are four equations, from which four unknowns may be found, if it is further known which sign to take in equations (2) and (4). There are two cases to consider.

Case (*a*). Given the levels of the surfaces of the water in the reservoirs and of the junction B, and the lengths and diameters of the pipes, to find the quantity flowing along each of the pipes.

To solve this problem, it is first necessary to obtain by trial, whether water flows to, or from, the reservoir C.

First assume there is no flow along the pipe BC, that is, the pressure head h_0 at B is equal to $z_2 - z_0$.

Then from (1), substituting for v_1 its value $\frac{Q_1}{\frac{\pi}{4} d_1^2}$,

$$\frac{64 l_1 Q_1^2}{\pi^2 . C^2 . d^5} = z_1 - z_2,$$

and

$$Q_1 = \frac{C\pi}{8} \sqrt{\frac{(z_1 - z_2)\, d^5}{l_1}} \quad \text{.....(5)},$$

from which an approximate value for Q_1 can be found. By solving (3) in the same way, an approximate value for Q_3, is,

$$Q_3 = \frac{C\pi}{8} \sqrt{\frac{(z_2 - z_3)\, d_3^5}{l_3}} \quad \text{.....(6)}.$$

If Q_3 is found to be equal to Q_1, the problem is solved; but if Q_3 is greater than Q_1, the assumed value for h_0 is too large, and if less, h_0 is too small, for a diminution in the pressure head at B will clearly diminish Q_3 and increase Q_1, and will also cause flow to take place from the reservoir C along CB. Increasing the pressure head at B will decrease Q_1, increase Q_3, and cause flow from B to C.

This preliminary trial will settle the question of sign in equations (2) and (4) and the four equations may be solved for the four unknowns, v_1, v_2, v_3 and h_0. It is better, however, to proceed by "trial and error."

The first trial shows whether it is necessary to increase or diminish h_0 and new values are, therefore, given to h_0 until the calculated values of v_1, v_2 and v_3 satisfy equation (4).

Case (*b*). Given Q_1, Q_2, Q_3, and the levels of the surfaces of the water in the reservoirs and of the junction B, to find the diameters of the pipes.

In this case, equation (4) must be satisfied by the given data, and, therefore, only three equations are given from which to calculate the four unknowns d_1, d_2, d_3 and h_0. For a definite solution a fourth equation must consequently be found, from some other condition. The further condition that may be taken is that the cost of the pipe lines shall be a minimum.

The cost of pipes is very nearly proportional to the product of the length and diameter, and if, therefore, $l_1 d_1 + l_2 d_2 + l_3 d_3$ is made a minimum, the cost of the pipes will be as small as possible.

Differentiating, with respect to h_0, the condition for a minimum is, that

$$l_1 \frac{dd_1}{dh_0} + l_2 \frac{dd_2}{dh_0} + l_3 \frac{dd_3}{dh_0} = 0 \quad \text{.....(7)}.$$

Substituting in (1), (2) and (3) the values for v_1, v_2 and v_3,

$$v_1 = \frac{Q_1}{\frac{\pi}{4} d_1^2},$$

$$v_2 = \frac{Q_2}{\frac{\pi}{4} d_2^2},$$

$$v_3 = \frac{Q_3}{\frac{\pi}{4} d_3^2},$$

differentiating and substituting in (7)

$$\frac{d_1^6}{Q_1^2} + \frac{d_2^6}{Q_2^2} + \frac{d_3^6}{Q_3^2} = 0 \quad \text{.....(8)}.$$

Putting the values of Q_1, Q_2, and Q_3 in (1), (2), (3), and (8), there are four equations as before for four unknown quantities.

It will be better however to solve by approximation.

Give some arbitrary value to say d_2, and calculate h_0 from equation (2).

Then calculate d_1 and d_3 by putting h_0 in (1) and (3), and substitute in equation (8).

If this equation is satisfied the problem is solved, but if not, assume a second value for d_2 and try again, and so on until such values of d_1, d_2, d_3 are obtained that (8) is satisfied.

In this, as in simpler systems, the pressure at any point in the pipes ought not to fall below the atmospheric pressure.

Flow through a pipe of constant diameter when the flow is diminishing at a uniform rate. Let l be the length of the pipe and d its diameter.

Let h be the total loss of head in the pipe, the whole loss being assumed to be by friction.

Let Q be the number of cubic feet per second that enters the pipe at a section A, and Q_1 the number of cubic feet that passes the section B, l feet from A, the quantity $Q - Q_1$ being taken from the pipe, by branches, at a uniform rate of $\frac{Q - Q_1}{l}$ cubic feet per foot.

Then, if the pipe is assumed to be continued on, it is seen from Fig. 103, that if the rate of discharge per foot length of the pipe is kept constant, the whole of Q will be discharged in a length of pipe,

$$L = \frac{lQ}{(Q - Q_1)}.$$

The discharge past any section, x feet from C, will be

$$Q_x = \frac{Q \cdot x}{L} = (Q - Q_1)\frac{x}{l}.$$

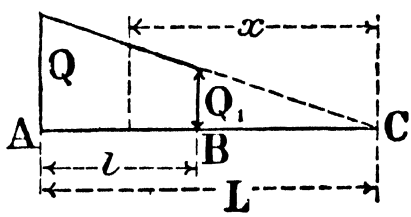

Fig. 103.

The velocity at the section is

$$v_x = \frac{4(Q - Q_1)x}{\pi d^2 \cdot l}.$$

Assuming that in an element of length ∂x the loss of head due to friction is

$$\partial h = \frac{\gamma \cdot v_x^n \partial x}{d^{1\cdot25}},$$

and substituting for v_x its value

$$\frac{Q_x}{\frac{\pi}{4}d^2} = \frac{Q \cdot x}{L\frac{\pi}{4}d^2},$$

the loss of head due to friction in the length l is

$$h = \int_{L-l}^{L} \gamma \left(\frac{4Q}{\pi L d^2}\right)^n \frac{x^n dx}{d^{1\cdot25}}$$

$$= \frac{\gamma}{n+1}\left(\frac{4Q}{\pi L d^2}\right)^n \frac{\{L^{n+1} - (L-l)^{n+1}\}}{d^{1\cdot25}}.$$

If Q_1 is zero, l is equal to L, and

$$h = \frac{\gamma}{n+1}\left(\frac{4Q}{\pi d^2}\right)^n \frac{L}{d^{1\cdot25}}.$$

The result is simplified by taking for ∂h the value

$$\partial h = \frac{4v^2 \partial x}{C^2 d},$$

and assuming C constant.

Then
$$h = \frac{64Q^2 L}{3\pi^2 C^2 d^5}.$$

Problem 5. **Pumping water through long pipes.* Required the diameter of a long pipe to deliver a given quantity of water, against a given effective head, in order that the charges on capital outlay and working expenses shall be a minimum.

Let l be the length of the pipe, d its diameter, and h feet the head against which Q cubic feet of water per second is to be pumped.

Let the cost per horse-power of the pumping plant and its accommodation be £N, and the cost of a pipe of unit diameter £n per foot length.

Let the cost of generating power be £m per cent. of the capital outlay in the pumping station, and the interest, depreciation, and cost of upkeep of the pumping plant, taken together, be r per cent. of the capital outlay, and that of the pipe line r_1 per cent.; r_1 will be less than r. The horse-power required to lift the water against a head h and to overcome the frictional resistance of the pipe is

$$\text{HP}=\frac{60\,.\,\text{Q}\,.\,62{\cdot}4}{33{,}000}\left\{h+\frac{4v^2l}{\text{C}^2d}\right\}$$

$$=0{\cdot}1136\text{Q}\left(h+\frac{64\text{Q}^2\,.\,l}{\pi^2\text{C}^2\,.\,d^5}\right).$$

Let e be the ratio of the average effective horse-power to the total horse-power, including the stand-by plant. The total horse-power of the plant is then

$$\text{HP}=\frac{0{\cdot}1136\text{Q}}{e}\left(h+\frac{6{\cdot}48\text{Q}^2l}{\text{C}^2d^5}\right).$$

The cost of the pumping plant is N times this quantity.

The total cost per year, P, of the station, is

$$\text{P}=0{\cdot}1136\,.\,\frac{m+r}{100}\,.\,\frac{\text{N}\,.\,\text{Q}}{e}\left(h+\frac{6{\cdot}48\text{Q}^2l}{\text{C}^2d^5}\right).$$

Assuming that the cost of the pipe line is proportional to the diameter and to the length, the capital outlay for the pipe is, £nld, and the cost of upkeep and interest is $\frac{£r_1nld}{100}$.

Therefore $$0{\cdot}1136\,.\,\frac{(m+r)}{100}\,.\,\frac{\text{N}\,.\,\text{Q}}{e}\left(h+\frac{6{\cdot}48\text{Q}^2l}{\text{C}^2d^5}\right)+\frac{nr_1ld}{100}$$

is to be a minimum.

Differentiating with respect to d and equating to zero,

$$\frac{3{\cdot}68\,(m+r)\,\text{N}\,.\,\text{Q}^3l}{e\text{C}^2d^6}=nr_1l,$$

and $$d^6=\frac{3{\cdot}68\,(m+r)\,\text{N}\,.\,\text{Q}^3}{e\text{C}^2nr_1}.$$

That is, d is independent of the length l and the head against which the water is pumped.

Taking C as 80, e as 0·6 and $\frac{(m+r)\,\text{N}}{nr_1}$ as 50, then

$$d=\sqrt[6]{\frac{3{\cdot}68\times 50}{80\times 80\times{\cdot}6}}\sqrt{\text{Q}}$$

$$=0{\cdot}603\sqrt{\text{Q}}.$$

If $\frac{(m+r)\,\text{N}}{nr_1}$ is 100,

$$d={\cdot}675\sqrt{\text{Q}},$$

and if $\frac{(m+r)\,\text{N}}{nr_1}$ is 25,

$$d={\cdot}535\sqrt{\text{Q}}.$$

Problem 6. *Pipe with a nozzle at the end.* Suppose a pipe of length l and diameter D has at one end a nozzle of diameter d, through which water is discharged from a reservoir, the level of the water in which is h feet above the centre of the nozzle.

Required the diameter of the nozzle so that the kinetic energy of the jet is a maximum.

* See also example 61, page 177.

Let V be the velocity of the water in the pipe.

Then, since there is continuity of flow, v the velocity with which the water leaves the nozzle is $\frac{V \cdot D^2}{d^2}$.

The head lost by friction in the pipe is

$$\frac{4fV^2l}{2g \cdot D} = \frac{4fv^2l \cdot d^4}{2gD^5}.$$

The kinetic energy of the jet per lb. of flow as it leaves the nozzle is $\frac{v^2}{2g}$.

Therefore
$$h = \frac{v^2}{2g}\left(1 + \frac{4fld^4}{D^5}\right) \quad \text{.....(1)},$$

from which by transposing and taking the square root,

$$v = \left(\frac{2gD^5h}{D^5 + 4fld^4}\right)^{\frac{1}{2}} \quad \text{.....(2)}.$$

The weight of water which flows per second $= \frac{\pi}{4} d^2 . v . w$ where $w =$ the weight of a cubic foot of water.

Therefore, the kinetic energy of the jet, is

$$E = \frac{w\pi}{4}\frac{d^2}{2g}\left(\frac{2gD^5h}{D^5 + 4fld^4}\right)^{\frac{3}{2}} \quad \text{.....(3)}.$$

This is a maximum when $\frac{dE}{dd} = 0$.

Therefore

$$\frac{2\pi}{4} d\,(D^5 + 4fld^4)^{\frac{3}{2}}\,(2ghD^5)^{\frac{3}{2}} - \frac{3}{2}\frac{\pi}{4} d^2\,(2ghD^5)^{\frac{3}{2}}\,(16fld^3)\,(D^5 + 4fld^4)^{\frac{1}{2}} = 0 \ldots (4),$$

from which
$$D^5 + 4fld^4 = 12fld^4,$$
and
$$D^5 = 8fld^4,$$
or
$$d = \sqrt[4]{\frac{D^5}{8fl}} \quad \text{.....(5)}.$$

If the nozzle is not circular but has an area a, then since in the circular nozzle of the same area

$$\frac{\pi}{4} d^2 = a,$$

from which
$$d^4 = \frac{16a^2}{\pi^2}.$$

Therefore
$$D^5 = \frac{128fla^2}{\pi^2},$$

and
$$a = 0{\cdot}278\sqrt{\frac{D^5}{fl}}.$$

By substituting the value of D^5 from (5) in (1) it is at once seen that, for maximum kinetic energy, the head lost in friction is

$$\frac{\frac{1}{2}v^2}{2g} \text{ or } \tfrac{1}{3}h.$$

Problem 7. Taking the same data as in problem 6, to find the area of the nozzle that the momentum of the issuing jet is a maximum.

The momentum of the quantity of water Q which flows per second, as it leaves the nozzle, is $\frac{w \cdot Qv}{g}$ lbs. feet. The momentum M is, therefore,

$$M = \frac{w}{g} \cdot \frac{\pi}{4} d^2 . v^2.$$

Substituting for v^2 from equation (1), problem 6,

$$M = \frac{2w \cdot \frac{\pi}{4} d^2D^5h}{D^5 + 4fld^4}.$$

Differentiating, and equating to zero,

$$D^5 - 4fld^4 = 0,$$

and

$$d = \sqrt[4]{\frac{D^5}{4fl}}.$$

If the nozzle has an area a, $D^5 = \frac{64}{\pi^2} fla^2$,

and

$$a = \cdot 392\sqrt{\frac{D^5}{fl}}.$$

Substituting for D^5 in equation (1) it is seen that when the momentum is a maximum half the head h is lost in friction.

Problem 6 has an important application, in determining the ratio of the size of the supply pipe to the orifice supplying water to a Pelton Wheel, while problem 7 gives the ratio, in order that the pressure exerted by the jet on a fixed plane perpendicular to the jet should be a maximum.

Problem 8. *Loss of head due to friction in a pipe, the diameter of which varies uniformly.* Let the pipe be of length l and its diameter vary uniformly from d_0 to d_1.

Suppose the sides of the pipe produced until they meet in P, Fig. 104.

Then $$\frac{S}{S+l} = \frac{d_1}{d_0} \text{ and } S = \frac{ld_1}{d_0 - d_1} \quad \text{.....(1).}$$

The diameter of the pipe at any distance x from the small end is

$$d = \frac{d_1(S+x)}{S}.$$

The loss of head in a small element of length ∂x is $\frac{4v^2\partial x}{C^2 d}$, v being the velocity when the diameter is d.

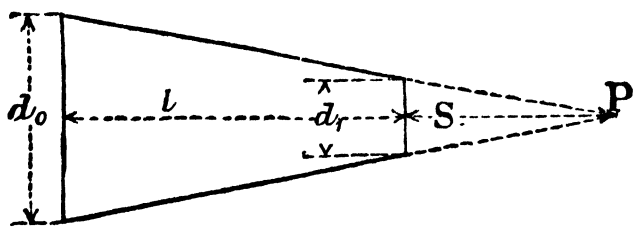

Fig. 104.

If Q is the flow in cubic ft. per second

$$v = \frac{Q}{\frac{\pi}{4}d^2} = \frac{4}{\pi}\frac{Q}{d^2}.$$

The total loss of head h in a length l is

$$h = \int_0^l \frac{64Q^2 . dx}{\pi^2 C^2 d^5}$$

$$= \int_0^l \frac{64 . Q^2 S^5 dx}{\pi^2 C^2 d_1^5 (S+x)^5}$$

$$= \frac{16Q^2 . S^5}{\pi^2 C^2 d_1^5}\left(\frac{1}{S^4} - \frac{1}{(S+l)^4}\right).$$

Substituting the value of S from equation (1) the loss of head due to friction can be determined.

Problem 9. *Pipe line consisting of a number of pipes of different diameters.* In practice only short conical pipes are used, as for instance in the limbs of a Venturi meter.

If it is desirable to diminish the diameter of a long pipe line, instead of using a pipe the diameter of which varies uniformly with the length, the line is made up of a number of parallel pipes of different diameters and lengths.

Let l_1, l_2, l_3... be the lengths and d_1, d_2, d_3... the diameters respectively, of the sections of the pipe.

The total loss of head due to friction, if C be assumed constant, is

$$h=\frac{4}{C^2}\left(\frac{l_1v_1^2}{d_1}+\frac{l_2v_2^2}{d_2}+\frac{l_3v_3^2}{d_3}\ldots\right)$$
$$=\frac{64Q^2}{\pi^2C^2}\left(\frac{l_1}{d_1^5}+\frac{l_2}{d_2^5}+\frac{l_3}{d_3^5}\ldots\right).$$

The diameter d of the pipe, which, for the same total length, would give the same discharge for the same loss of head due to friction, can be found from the equation

$$\frac{l_1+l_2+l_3\ldots}{d^5}=\frac{l_1}{d_1^5}+\frac{l_2}{d_2^5}+\frac{l_3}{d_3^5}+\ldots.$$

The length L of a pipe, of constant diameter D, which will give the same discharge for the same loss of head by friction, is

$$L=D^5\left(\frac{l_1}{d_1^5}+\frac{l_2}{d_2^5}+\frac{l_3}{d_3^5}\ldots\right).$$

Problem 10. *Pipe acting as a siphon.* It is sometimes necessary to take a pipe line over some obstruction, such as a hill, which necessitates the pipe rising, not only above the hydraulic gradient as in Fig. 87, but even above the original level of the water in the reservoir from which the supply is derived.

Let it be supposed, as in Fig. 105, that water is to be delivered from the reservoir B to the reservoir C through the pipe BAC, which at the point A rises h_1 feet above the level of the surface of the water in the upper reservoir.

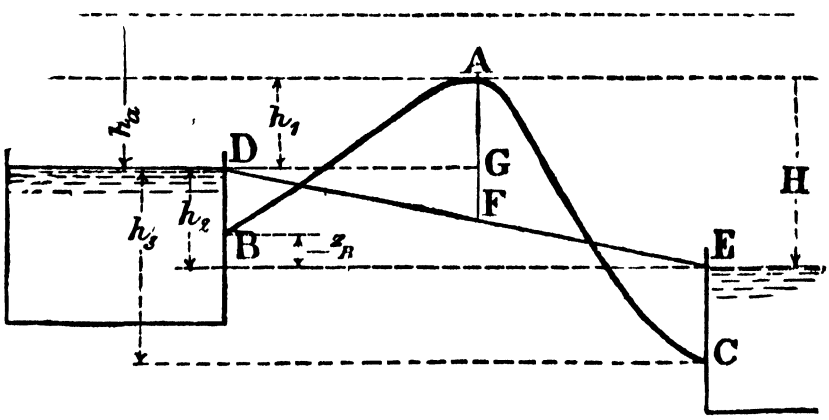

Fig. 105.

Let the difference in level of the surfaces of the water in the reservoirs be h_2 feet.

Let h_a be the pressure head equivalent to the atmospheric pressure.

To start the flow in the pipe, it will be necessary to fill it by a pump or other artificial means.

Let it be assumed that the flow is allowed to take place and is regulated so that it is continuous, and the velocity v is as large as possible.

Then neglecting the velocity head and resistances other than that due to friction,

$$h_2=\frac{4fv^2L}{2gd} \text{ or } v=\sqrt{\frac{2gdh_2}{4fL}} \quad\ldots\ldots\ldots\ldots\ldots\ldots\ldots(1),$$

L and d being the length and diameter of the pipe respectively.

The hydraulic gradient is practically the straight line DE.

Theoretically if AF is made greater than h_a, which is about 34 feet, the pressure at A becomes negative and the flow will cease.

Practically AF cannot be made much greater than 25 feet.

To find the maximum velocity possible in the rising limb AB, *so that the pressure head at* A *shall just be zero.*

Let v_m be this velocity. Let the datum level be the surface of the water in C.

Then $$h_a + h_B + z_B = \frac{4fl_{AB} \cdot v_m^2}{2g \cdot d} + H + \frac{v_m^2}{2g}.$$

But $$H = h_B + z_B + h_1.$$

Therefore neglecting d in the denominator

$$v_m = \sqrt{\frac{2g\,(h_a - h_1) \cdot d}{4f\,l_{AB}}} \qquad \ldots\ldots\ldots\ldots(2).$$

If the pressure head is not to be less than 10 feet of water,

$$v_m = \sqrt{\frac{2g\,(h_a - 10 - h_1)\,d}{4fl_{AB}}}.$$

If v_m is less than v, the discharge of the siphon will be determined by this limiting velocity, and it will be necessary to throttle the pipe at C by means of a valve, so as to keep the limb AC full and to keep the "siphon" from being broken.

In designing such a siphon it is, therefore, necessary to determine whether the flow through the pipe as a whole under a head h_2 is greater, or less than, the flow in the rising limb under a head $h_a - h_1$.

If AB is short, or h_1 so small that v_m is greater than v, the head absorbed by friction in AB will be

$$\frac{4fv^2 l_{AB}}{2gd}.$$

If the end C of the pipe is open to the atmosphere instead of being connected to a reservoir, the total head available will be h_3 instead of h_2.

111. Velocity of flow in pipes.

The mean velocity of flow in pipes is generally about 3 feet per second, but in pipes supplying water to hydraulic machines it may be as high as 10 feet per second, and in short pipes much higher velocities are allowed. If the velocity is high, the loss of head due to friction in long pipes becomes excessive, and the risk of broken pipes and valves through attempts to rapidly check the flow, by the sudden closing of valves, or other causes, is considerably increased. On the other hand, if the velocity is too small, unless the water is very free from suspended matter, sediment* tends to collect at the lower parts of the pipe, and further, at low velocities it is probable that fresh water sponges and polyzoa will make their abode on the surface of the pipe, and thus diminish its carrying capacity.

112. Transmission of power along pipes by hydraulic pressure.

Power can be transmitted hydraulically through a considerable distance, with very great efficiency, as at high pressures the per centage loss due to friction is small.

Let water be delivered into a pipe of diameter d feet under a head of H feet, or pressure of p lbs. per sq. foot, for which the equivalent head is $H = \frac{p}{w}$ feet.

* An interesting example of this is quoted on p. 82 *Trans. Am.S.C.E.* Vol. XLIV.

Let the velocity of flow be v feet per second, and the length of the pipe L feet.

The head lost due to friction is

$$h = \frac{4 . f . v^2 . \mathrm{L}}{2g . d} \quad \ldots\ldots\ldots\ldots\ldots\ldots\ldots\ldots (1),$$

and the energy per pound available at the end of the pipe is, therefore,

$$\mathrm{H} - \frac{4fv^2\mathrm{L}}{2gd},$$

or

$$\frac{p}{w} - \frac{4fv^2\mathrm{L}}{2gd}.$$

The efficiency is

$$\frac{\mathrm{H}-h}{\mathrm{H}} = 1 - \frac{h}{\mathrm{H}}$$

$$= 1 - \frac{4fv^2\mathrm{L}}{2gd\mathrm{H}}.$$

The fraction of the given energy lost is

$$m = \frac{h}{\mathrm{H}}.$$

For a given pipe the efficiency increases as the velocity diminishes.

If f and L are supposed to remain constant, the efficiency is constant if $\frac{v^2}{d\mathrm{H}}$ is constant, and since v is generally fixed from other conditions it may be supposed constant, and the efficiency then increases as the product $d\mathrm{H}$ increases.

If W is the weight of water per second passing through the pipe, the work put into the pipe is W . H foot lbs. per second, the available work per second at the end of the pipe is W $(\mathrm{H}-h)$, and the horse-power transmitted is

$$\mathrm{HP} = \frac{\mathrm{W} . (\mathrm{H}-h)}{550} = \frac{\mathrm{WH}}{550}(1-m).$$

Since $$\mathrm{W} = 62{\cdot}4\,\frac{\pi}{4}\,d^2v,$$

*the horse-power $$= \frac{\pi}{4}\,\frac{d^2v\,62{\cdot}4}{550}\left(\mathrm{H} - \frac{4fv^2\mathrm{L}}{2gd}\right)$$

$$= {\cdot}089vd^2\mathrm{H}\,(1-m).$$

From (1) $$m\mathrm{H} = \frac{4fv^2\mathrm{L}}{2gd},$$

therefore, $$v = 4{\cdot}01\sqrt{\frac{dm\mathrm{H}}{f\mathrm{L}}},$$

and the horse-power $$= 0{\cdot}357\sqrt{\frac{m}{f\mathrm{L}}}\,d^{\frac{5}{2}}\mathrm{H}^{\frac{3}{2}}\,(1-m).$$

* See example 60, page 177.

If p is the pressure per sq. inch

$$H = \frac{p144}{62{\cdot}4},$$

and the horse-power $= 1{\cdot}24 \sqrt{\frac{m}{fL}} d^{\frac{5}{2}} p^{\frac{3}{2}} (1 - m).$

From this equation if m is given and L is known the diameter d to transmit a given horse-power can be found, and if d is known the longest length L that the loss shall not be greater than the given fraction m can be found.

The cost of the pipe line before laying is proportional to its weight, and the cost of laying approximately proportional to its diameter.

If t is the thickness of the pipe in inches the weight per foot length is $37{\cdot}5\pi dt$ lbs., approximately.

Assuming the thickness of the pipe to be proportional to the pressure, *i.e.* to the head H,

$$t = kp = kH,$$

and the weight per foot may therefore be written

$$w = k_1 d \,.\, H.$$

The initial cost of the pipe per foot will then be

$$C = k_2 k_1 dH = K \,.\, d \,.\, H,$$

and since the cost of laying is approximately proportional to d, the total cost per foot is

$$P = K \,.\, d \,.\, H + K_1 d.$$

And since the horse-power transmitted is

$$HP = {\cdot}357 \sqrt{\frac{m}{fL}} d^{\frac{5}{2}} H^{\frac{3}{2}} (1 - m),$$

for a given*horse-power and efficiency, the initial cost per horse-power including laying will be a minimum when

$$\frac{0{\cdot}357 \sqrt{\frac{m}{fL}} d^{\frac{5}{2}} H^{\frac{3}{2}} (1 - m)}{K \,.\, d \,.\, H + K_1 d}$$

is a maximum.

In large works, docks, and goods yards, the hydraulic transmission of power to cranes, capstans, riveters and other machines is largely used.

A common pressure at which water is supplied from the pumps is 700 to 750 lbs. per sq. inch, but for special purposes, it is sometimes as high as 3000 lbs. per sq. inch. These high pressures are, however, frequently obtained by using an intensifier (Ch. XI) to raise the ordinary pressure of 700 lbs. to the pressure required.

* See example 61, page 177.

The demand for hydraulic power for the working of lifts, etc. has led to the laying down of a network of mains in several of the large cities of Great Britain. In London a mean velocity of 4 feet per second is allowed in the mains and the pressure is 750 lbs. per sq. inch. In later installations, pressures of 1100 lbs. per sq. inch are used.

113. The limiting diameter of cast-iron pipes.

The diameter d for a cast-iron pipe cannot be made very large if the pressure is high.

If p is the safe internal pressure per sq. inch, and s the safe stress per sq. inch of the metal, and r_1 and r_2 the internal and external radii of the pipe,

$$p = \frac{s\,(r_2^2 - r_1^2)}{r_2^2 + r_1^2}\,*.$$

For a pressure $p = 1000$ lbs. per sq. inch, and a stress s of 3000 lbs. per sq. inch, r_2 is 5·65 inches when r_1 is 4 inches, or the pipe requires to be 1·65 inches thick.

If, therefore, the internal diameter is greater than 8 inches, the pipe becomes very thick indeed.

The largest cast-iron pipe used for this pressure is between 7″ and 8″ internal diameter.

Using a maximum velocity of 5 feet per second, and a pipe 7½ inches diameter, the maximum horse-power, neglecting friction, that can be transmitted at 1000 lbs. per sq. inch by one pipe is

$$\text{HP} = \frac{44{\cdot}18 \times 1000 \times 5}{550}$$
$$= 400.$$

The following example shows that, if the pipe is 13,300 feet long, 15 per cent. of the power is lost and the maximum power that can be transmitted with this length of pipe is, therefore, 320 horse-power.

Steel mains are much more suitable for high pressures, as the working stress may be as high as 7 tons per sq. inch. The greater plasticity of the metal enables them to resist shock more readily than cast-iron pipes and slightly higher velocities can be used.

A pipe 15 inches diameter and ½ inch thick in which the pressure is 1000 lbs. per sq. inch, and the velocity 5 ft. per second, is able to transmit 1600 horse-power.

Example. Power is transmitted along a cast-iron main 7½ inches diameter at a pressure of 1000 lbs. per sq. inch. The velocity of the water is 5 feet per second. Find the maximum distance the power can be transmitted so that the efficiency is not less than 85 %.

* Ewing's *Strength of Materials.*

$$d = 0{\cdot}625 \text{ feet},$$

$$H = \frac{1000 \times 144}{62{\cdot}4} = 2300,$$

therefore $$h = 0{\cdot}15 \times 2300$$
$$= 345 \text{ feet}.$$

Then $$345' = \frac{4 \times 0{\cdot}0104 \times 25 \,.\, L}{2g \times 0{\cdot}625},$$

from which $$L = \frac{345 \times 64{\cdot}4 \times 0{\cdot}625}{0{\cdot}0104 \times 100}$$
$$= 13{,}300 \text{ feet}.$$

114. Pressures on pipe bends.

If a bent pipe contain a fluid at rest, the intensity of pressure being the same in all directions, the resultant force tending to move the pipe in any direction will be the pressure per unit area multiplied by the projected area of the pipe on a plane perpendicular to that direction.

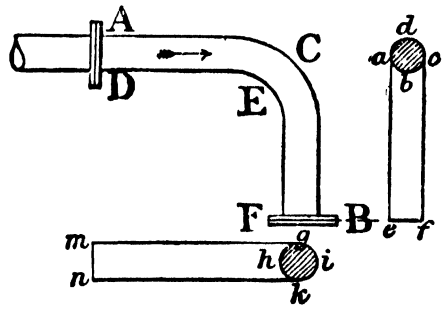

Fig. 106. Fig. 107.

If one end of a right-angled elbow, as in Fig. 106, be bolted to a pipe full of water at a pressure p pounds per sq. inch by gauge, and on the other end of the elbow is bolted a flat cover, the tension in the bolts at A will be the same as in the bolts at B. The pressure on the cover B is clearly $\cdot 7854pd^2$, d being the diameter of the pipe in inches. If the elbow be projected on to a vertical plane the projection of ACB is $daefc$, the projection of DEF is $abcfe$. The resultant pressure on the elbow in the direction of the arrow is, therefore, $p \,.\, abcd = \cdot 7854pd^2$.

If the cover B is removed, and water flows through the pipe with a velocity v feet per second, the horizontal momentum of the water is destroyed and there is an additional force in the direction of the arrow equal to $\cdot 7854wd^2v^2/144g$.

When flow is taking place the vertical force tending to lift the elbow or to shear the bolts at A is

$$\cdot 7854d^2\left(p + \frac{wv^2}{144g}\right).$$

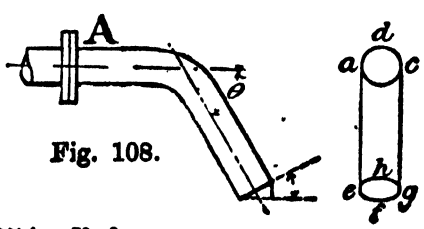

Fig. 108.

If the elbow is less than a right angle, as in Fig. 108, the total tension in the bolts at A is

$$T = p\,(daehgc - aefgc) + \frac{\cdot 7854wd^2v^2}{144g}(1 - \cos\theta),$$

and since the area $aehgcb$ is common to the two projected areas,

$$T = \cdot 7854d^2\left(p - p\cos\theta + \frac{wv^2(1 - \cos\theta)}{144g}\right).$$

Consider now a pipe bent as shown in Fig. 109, the limbs AA and FF being parallel, and the water being supposed at rest.

The total force acting in the direction AA is

$$P = p\{dcghea - aefgcb + d'c'g'h'e'a' - a'e'f'g'c'b'\},$$

which clearly is equal to 0.

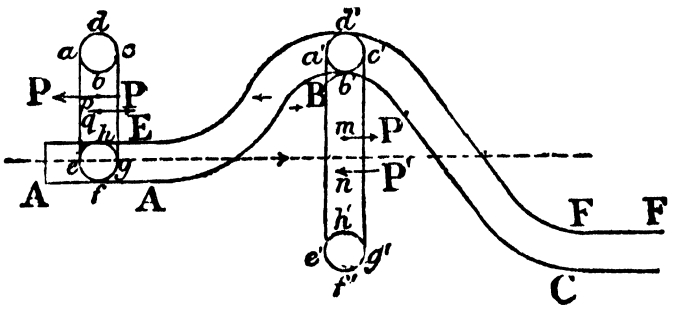

Fig. 109.

If now instead of the fluid being at rest it has a uniform velocity, the pressure must remain constant, and since there is no change of velocity there is no change of momentum, and the resultant pressure in the direction parallel to AA is still zero.

There is however a couple acting upon the bend tending to rotate it in a clockwise direction.

Let p and q be the centres of gravity of the two areas *daehgc* and *aefgcb* respectively, and m and n the centres of gravity of

$$d'a'e'h'g'c' \text{ and } a'e'f'g'c'b'.$$

Through these points there are parallel forces acting as shown by the arrows, and the couple is

$$M = P'.mn - P.pq.$$

The couple $P.pq$ is also equal to the pressure on the semicircle *adc* multiplied by the distance between the centres of gravity of *adc* and *efg*, and the couple $P'.mn$ is equal to the pressure on $a'd'c'$ multiplied by the distance between the centres of gravity of $a'd'c'$ and $e'f'g'$.

Then the resultant couple is the pressure on the semicircle *efg* multiplied by the distance between the centres of gravity of *efg* and $e'f'g'$.

If the axes of FF and AA are on the same straight line the couple, as well as the force, becomes zero.

It can also be shown, by similar reasoning, that, as long as the diameters at F and A are equal, the velocities at these sections being therefore equal, and the two ends A and F are in the same straight line, the force and the couple are both zero, whatever the form of the pipe. If, therefore, as stated by Mr Froude, "the

two ends of a tortuous pipe are in the same straight line, there is no tendency for the pipe to move."

115. Pressure on a plate in a pipe filled with flowing water.

The pressure on a plate in a pipe filled with flowing water, with its plane perpendicular to the direction of flow, on certain assumptions, can be determined.

Let PQ, Fig. 110, be a thin plate of area a and let the sectional area of the pipe be A.

The stream as it passes the edge of the plate will be contracted, and the section of the stream on a plane gd will be $c(A-a)$, c being some coefficient of contraction.

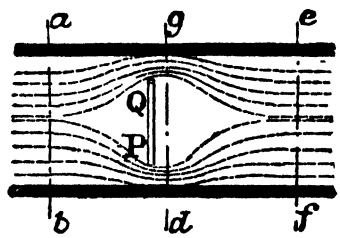

Fig. 110.

It has been shown on page 52 that for a sharp-edged orifice the coefficient of contraction is about 0·625, and when part of the orifice is fitted with sides so that the contraction is incomplete and the stream lines are in part directed perpendicular to the orifice, the coefficient of contraction is larger.

If a coefficient in this case of 0·66 is assumed, it will probably be not far from the truth.

Let V_1 be the velocity through the section gd and V the mean velocity in the pipe.

The loss of head due to sudden enlargement from gd to ef is

$$\frac{(V_1-V)^2}{2g}.$$

Let the pressures at the sections ab, gd, ef be p, p_1 and p_2 pounds per square foot respectively.

Bernouilli's equations for the three sections are then,

$$\frac{p}{w}+\frac{V^2}{2g}=\frac{p_1}{w}+\frac{V_1^2}{2g} \quad \text{.....(1)},$$

and

$$\frac{p_1}{w}+\frac{V_1^2}{2g}=\frac{p_2}{w}+\frac{V^2}{2g}+\frac{(V_1-V)^2}{2g} \quad \text{.....(2)}.$$

Adding (1) and (2)

$$\left(\frac{p}{w}-\frac{p_2}{w}\right)=\frac{(V_1-V)^2}{2g}.$$

The whole pressure on the plate in the direction of motion is then

$$P=(p-p_2).a=w.a.\frac{(V_1-V)^2}{2g}$$

$$=w.a.\frac{V^2}{2g}\left(\frac{A}{\cdot 66\,(A-a)}-1\right)^2.$$

If $a = \frac{1}{2}A$, $$P = 4wa\frac{V^2}{2g} \text{ nearly.}$$

If $a = \frac{1}{10}A$, $$P = \frac{0{\cdot}46w\,.\,a\,.\,V^2}{2g}.$$

116. Pressure on a cylinder.

If instead of a thin plate a cylinder be placed in the pipe, with its axis coincident with the axis of the pipe, Fig. 111, there are two enlargements of the section of the water.

As the stream passes the up-stream edge of the cylinder, it contracts to the section at *cd*, and then enlarges to the section *ef*. It again enlarges at the down-stream end of the cylinder from the section *ef* to the section *gh*.

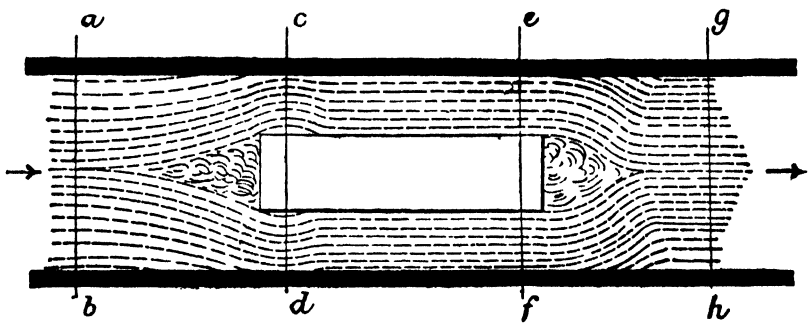

Fig. 111.

Let v_1, v_2, v_3, v_4 be the velocities at *ab*, *cd*, *ef* and *gh* respectively, v_4 and v_1 being equal.

Between *cd* and *ef* there is a loss of head

$$\frac{(v_2 - v_3)^2}{2g},$$

and between *ef* and *gh* there is a loss of

$$\frac{(v_3 - v_1)^2}{2g}.$$

The Bernouilli's equations for the sections are

$$\frac{p_1}{w} + \frac{v_1^2}{2g} = \frac{p_2}{w} + \frac{v_2^2}{2g} \text{.....(1)},$$

$$\frac{p_1}{w} + \frac{v_1^2}{2g} = \frac{p_2}{w} + \frac{v_2^2}{2g} = \frac{p_3}{w} + \frac{v_3^2}{2g} + \frac{(v_2 - v_3)^2}{2g} \text{.....(2)},$$

$$\frac{p_3}{w} + \frac{v_3^2}{2g} = \frac{p_4}{w} + \frac{v_1^2}{2g} + \frac{(v_3 - v_1)^2}{2g} \text{.....(3)}.$$

Adding (2) and (3),

$$\frac{p_1 - p_4}{w} = \frac{(v_2 - v_3)^2}{2g} + \frac{(v_3 - v_1)^2}{2g}.$$

If the coefficient of contraction at cd is c, the area at cd

$$= c\,(A - a).$$

Then $$v_2 = \frac{v_1 \,.\, A}{c \,.\, (A - a)} \quad \text{and} \quad v_3 = \frac{v_1 A}{A - a}.$$

Therefore

$$(p_1 - p_4) = \frac{w v_1^2}{2g} \left\{ \left(\frac{a}{A - a} \right)^2 + \left(\frac{A}{c\,(A - a)} - \frac{A}{(A - a)} \right)^2 \right\},$$

and the pressure on the cylinder is

$$P = (p_1 - p_4) \,.\, a.$$

EXAMPLES.

(1) A new cast-iron pipe is 2000 ft. long and 6 ins. diameter. It is to discharge 50 c. ft. of water per minute. Find the loss of head in friction and the virtual slope.

(2) What is the head lost per mile in a pipe 2 ft. diameter, discharging 6,000,000 gallons in 24 hours? $f = \cdot 007$.

(3) A pipe is to supply 40,000 gallons in 24 hours. Head of water above point of discharge = 36 ft. Length of pipe = $2\frac{1}{2}$ miles. Find its diameter. Take C from Table XII.

(4) A pipe is 12 ins. in diameter and 3 miles in length. It connects two reservoirs with a difference of level of 20 ft. Find the discharge per minute in c. ft. Use Darcy's coefficient for corroded pipes.

(5) A water main has a virtual slope of 1 in 900 and discharges 35 c. ft. per second. Find the diameter of the main. Coefficient f is 0·007.

(6) A pipe 12 ins. diameter is suddenly enlarged to 18 ins., and then to 24 ins. diameter. Each section of pipe is 100 feet long. Find the loss of head in friction in each length, and the loss due to shock at each enlargement. The discharge is 10 c. ft. per second, and the coefficient of friction $f = \cdot 0106$. Draw, to scale, the hydraulic gradient of the pipe.

(7) Find an expression for the relative discharge of a square, and a circular pipe of the same section and slope.

(8) A pipe is 6 ins. diameter, and is laid for a quarter mile at a slope of 1 in 50; for another quarter mile at a slope of 1 in 100; and for a third quarter mile is level. The level of the water is 20 ft. above the inlet end, and 9 ft. above the outlet end. Find the discharge (neglecting all losses except skin friction) and draw the hydraulic gradient. Mark the pressure in the pipe at each quarter mile.

(9) A pipe 2000 ft. long discharges Q c. ft. per second. Find by how much the discharge would be increased if to the last 1000 ft. a second pipe of the same size were laid alongside the first and the water allowed to flow equally well along either pipe.

(10) A reservoir, the level of which is 50 ft. above datum, discharges into a second reservoir 30 ft. above datum, through a 12 in. pipe, 5000 ft. in length; find the discharge. Also, taking the levels of the pipe at the upper reservoir, and at each successive 1000 ft., to be 40, 25, 12, 12, 10, 15, ft. above datum, write down the pressure at each of these points, and sketch the position of the line of hydraulic gradient.

(11) It is required to draw off the water of a reservoir through a pipe placed horizontally. Diameter of pipe 6 ins. Length 40 ft. Effective head 20 ft. Find the discharge per second.

(12) Given the data of Ex. 11 find the discharge, taking into account the loss of head if the pipe is not bell-mouthed at either end.

(13) A pipe 4 ins. diameter and 100 ft. long discharges $\frac{1}{2}$ c. ft. per second. Find the head expended in giving velocity of entry, in overcoming mouthpiece resistance, and in friction.

(14) Required the diameter of a pipe having a fall of 10 ft. per mile, and capable of delivering water at a velocity of 3 ft. per second when dirty.

(15) Taking the coefficient f as $0{\cdot}01\left(1+\frac{1}{12d}\right)$, find how much water would be discharged through a 12-inch pipe a mile long, connecting two reservoirs with a difference of level of 20 feet.

(16) Water flows through a 12-inch pipe having a virtual slope of 3 feet per 1000 feet at a velocity of 3 feet per second.

Find the friction per sq. ft. of surface of pipe in lbs.

Also the value of f in the ordinary formula for flow in pipes.

(17) Find the relative discharge of a 6-inch main with a slope of 1 in 400, and a 4-inch main with a slope of 1 in 50.

(18) A 6-inch main 7 miles in length with a virtual slope of 1 in 100 is replaced by 4 miles of 6-inch main, and 3 miles of 4-inch main. Would the discharge be altered, and, if so, by how much?

(19) Find the velocity of flow in a water main 10 miles long, connecting two reservoirs with a difference of level of 200 feet. Diameter of main 15 inches. Coefficient $f=0{\cdot}009$.

(20) Find the discharge, if the pipe of the last question is replaced for the first 5 miles by a pipe 20 inches diameter and the remainder by a pipe 12 inches diameter.

(21) Calculate the loss of head per mile in a 10-inch pipe (area of cross section 0·54 sq. ft.) when the discharge is $2\frac{1}{2}$ c. ft. per second.

(22) A pipe consists of $\frac{1}{2}$ a mile of 10 inch, and $\frac{1}{2}$ a mile of 5-inch pipe, and conveys $2\frac{1}{2}$ c. ft. per second. State from the answer to the previous question the loss of head in each section and sketch a hydraulic gradient. The head at the outlet is 5 ft.

(23) What is the head lost in friction in a pipe 3 feet diameter discharging 6,000,000 gallons in 12 hours?

(24) A pipe 2000 feet long and 8 inches diameter is to discharge 85 c. ft. per minute. What must be the head of water?

(25) A pipe 6 inches diameter, 50 feet long, is connected to the bottom of a tank 50 feet long by 40 feet wide. The original head over the open end of the pipe is 15 feet. Find the time of emptying the tank, assuming the entrance to the pipe is sharp-edged.

If h = the head over the exit of the pipe at any moment,

$$h=\frac{v^2}{2g}+\frac{\cdot 5v^2}{2g}+\frac{4fv^2\,50'}{2g\times 0\cdot 5'}$$

from which,
$$v=\frac{\sqrt{2g}\,.\,h^{\frac{1}{2}}}{1\cdot 5+400f}.$$

In time ∂t, the discharge is

$$v\,\frac{28\cdot 27}{144}\partial t=\frac{0\cdot 196\sqrt{2g}}{1\cdot 5+400f}h^{\frac{1}{2}}\partial t.$$

In time ∂t the surface falls an amount ∂h.

Therefore
$$\frac{0\cdot 196\sqrt{2g}}{1\cdot 5+400f}\partial t=50\times 40\,.\,\frac{\partial h}{h^{\frac{1}{2}}}.$$

Integrating,

$$t=\frac{2000\,(1\cdot 5+400f)}{0\cdot 196\sqrt{2g}}\,2\sqrt{15}=\frac{79000\,(1\cdot 5+400f)}{\sqrt{2g}}\text{ secs.}$$

(26) The internal diameter of the tubes of a condenser is 0·654 inches. The tubes are 7 feet long and the number of tubes is 400. The number of gallons per minute flowing through the condenser is 400. Find the loss of head due to friction as the water flows through the tubes. $f=0\cdot 006$.

(27) Assuming fluid friction to vary as the square of the velocity, find an expression for the work done in rotating a disc of diameter D at an angular velocity a in water.

(28) What horse-power can be conveyed through a 6-in. main if the working pressure of the water supplied from the hydraulic power station is 700 lbs. per sq. in.? Assume that the velocity of the water is limited to 8 ft. per second.

(29) Eighty-two horse-power is to be transmitted by hydraulic pressure a distance of a mile. Find the diameter of pipe and pressure required for an efficiency of ·9 when the velocity is 5 ft. per sec.

The frictional loss is given by equation

$$h=\cdot 01\,\frac{v^2}{2g}\,.\,\frac{4l}{d}.$$

(30) Find the inclination necessary to produce a velocity of $4\frac{1}{2}$ feet per second in a steel water main 31 inches diameter, when running full and discharging with free outlet, using the formula

$$i=\frac{\cdot 0005\,v^{1\cdot 94}}{d^{1\cdot 25}}.$$

(31) The following values of the slope i and the velocity v were determined from an experiment on flow in a pipe ·1296 ft. diam.

i	·00022	·00182	·00650	·02389	·04348	·12315	·22408
v	·205	·606	1·252	2·585	3·593	6·310	8·521

Determine k and n in the formula

$$i = kv^n.$$

Also determine values of C for this pipe for velocities of ·5, 1, 3, 5 and 7 feet per sec.

(32) The total length of the Coolgardie steel aqueduct is 307½ miles and the diameter 30 inches. The discharge per day may be 5,600,000 gallons. The water is lifted a total height of 1499 feet.

Find (*a*) the head lost due to friction,

(*b*) the total work done per minute in raising the water.

(33) A pipe 2 feet diameter and 500 feet long without bends furnishes water to a turbine. The turbine works under a head of 25 feet and uses 10 c. ft. of water per second. What percentage of work of the fall is lost in friction in the pipe?

Coefficient $$f = \cdot 007\left(1 + \frac{1}{12d}\right).$$

(34) Eight thousand gallons an hour have to be discharged through each of six nozzles, and the jet has to reach a height of 80 ft.

If the water supply is 1½ miles away, at what elevation above the nozzles would you place the required reservoir, and what would you make the diameter of the supply main?

Give the dimensions of the reservoir you would provide to keep a constant supply for six hours. Lond. Un. 1903.

(35) The pipes laid to connect the Vyrnwy dam with Liverpool are 42 inches diameter. How much water will such a pipe supply in gallons per diem if the slope of the pipe is 4½ feet per mile?

At one point on the line of pipes the gradient is 6½ feet per mile, and the pipe diameter is reduced to 39 inches; is this a reasonable reduction in the dimension of the cross section? Lond. Un. 1905.

(36) Water under a head of 60 feet is discharged through a pipe 6 inches diameter and 150 feet long, and then through a nozzle the area of which is one-tenth the area of the pipe. Neglecting all losses except friction, find the velocity with which the water leaves the nozzle.

(37) Two rectangular tanks each 50 feet long and 50 feet broad are connected by a horizontal pipe 4 inches diameter, 1000 feet long. The head over the centre of the pipe at one tank is 12 feet, and over the other 4 feet when flow commences.

Determine the time taken for the water in the two tanks to come to the same level. Assume the coefficient C to be constant and equal to 90.

(38) Two reservoirs are connected by a pipe 1 mile long and 10″ diameter; the difference in the water surface levels being 25 ft. $v = 120\sqrt{mi}$.

Determine the flow through the pipe in gallons per hour and find by how much the discharge would be increased if for the last 2000 ft. a second pipe of 10″ diameter is laid alongside the first. Lond. Un. 1905.

(39) A pipe 18″ diameter leads from a reservoir, 300 ft. above the datum, and is continued for a length of 5000 ft. at the datum, the length being 15,000 ft. For the last 5000 ft. of its length water is drawn off by

service pipes at the rate of 10 c. ft. per min. per 500 ft. uniformly. Find the pressure at the end of the pipe. Lond. Un. 1906.

(40) 350 horse-power is to be transmitted by hydraulic pressure a distance of $1\frac{1}{2}$ miles.

Find the number of 6 ins. diameter pipes and the pressure required for an efficiency of 92 per cent. $f = \cdot 01$. Take v as 3 ft. per sec.

(41) Find the loss of head due to friction in a water main L feet long, which receives Q cubic feet per second at the inlet end and delivers $\frac{Q}{L}$ cubic feet to branch mains for each foot of its length.

What is the form of the hydraulic gradient?

(42) A reservoir A supplies water to two other reservoirs B and C. The difference of level between the surfaces of A and B is 75 feet, and between A and C 97·5 feet. A common 8-inch cast-iron main supplies for the first 850 feet to a point D. A 6-inch main of length 1400 feet is then carried on in the same straight line to B, and a 5-inch main of length 630 feet goes to C. The entrance to the 8-inch main is bell-mouthed, and losses at pipe exits to the reservoirs and at the junction may be neglected. Find the quantity discharged per minute into the reservoirs B and C. Take the coefficient of friction (f) as ·01. Lond. Un. 1907.

(43) Describe a method of finding the "loss of head" in a pipe due to the hydraulic resistances, and state how you would proceed to find the loss as a function of the velocity.

(44) A pipe, l feet long and D feet in diameter, leads water from a tank to a nozzle whose diameter is d, and whose centre is h feet below the level of water in the tank. The jet impinges on a fixed plane surface. Assuming that the loss of head due to hydraulic resistance is given by

$$h = 4fl\frac{v^2}{2gd},$$

show that the pressure on the surface is a maximum when

$$d^4 = \frac{D^5}{4fl}.$$

(45) Find the flow through a sewer consisting of a cast-iron pipe 12 inches diameter, and having a fall of 3 feet per mile, when discharging full bore. $c = 100$.

(46) A pipe 9 inches diameter and one mile long slopes for the first half mile at 1 in 200 and for the second half mile at 1 in 100. The pressure head at the higher end is found to be 40 feet of water and at the lower 20 feet.

Find the velocity and flow through the pipe.

Draw the hydraulic gradient and find the pressure in feet at 500 feet and 1000 feet from the higher end.

(47) A town of 250,000 inhabitants is to be supplied with water. Half the daily supply of 32 gallons per head is to be delivered in 8 hours.

The service reservoir is two miles from the town, and a fall of 10 feet per mile can be allowed in the pipe.

What must be the size of the pipe? $C = 90$.

(48) A water pipe is to be laid in a street 800 yards long with houses on both sides of the street of 24 feet frontage. The average number of inhabitants of each house is 6, and the average consumption of water for each person is 30 gallons in 8 hrs. On the assumption that the pipe is laid in four equal lengths of 200 yards and has a uniform slope of $\frac{1}{400}$, and that the whole of the water flows through the first length, three-fourths through the second, one half through the third and one quarter through the fourth, and that the value of C is 90 for the whole pipe, find the diameters of the four parts of the pipe.

(49) A pipe 3 miles long has a uniform slope of 20 feet per mile, and is 18 inches diameter for the first mile, 30 inches for the second and 21 inches for the third. The pressure heads at the higher and lower ends of the pipe are 100 feet and 40 feet respectively. Find the discharge through the pipe and determine the pressure heads at the commencement of the 30 inches diameter pipe, and also of the 21 inches diameter pipe.

(50) The difference of level of two reservoirs ten miles apart is 80 feet. A pipe is required to connect them and to convey 45,000 gallons of water per hour from the higher to the lower reservoir.

Find the necessary diameter of the pipe, and sketch the hydraulic gradient, assuming $f = 0{\cdot}01$.

The middle part of the pipe is 120 feet below the surface of the upper reservoir. Calculate the pressure head in the pipe at a point midway between the two reservoirs.

(51) Some hydraulic machines are served with water under pressure by a pipe 1000 feet long, the pressure at the machines being 600 lbs. per square inch. The horse-power developed by the machine is 300 and the friction horse-power in the pipes 120. Find the necessary diameter of the pipe, taking the loss of head in feet as $0{\cdot}03 \frac{l}{d} \times \frac{v^2}{2g}$ and ·43 lb. per square inch as equivalent to 1 foot head. Also determine the pressure at which the water is delivered by the pump.

What is the maximum horse-power at which it would be possible to work the machines, the pump pressure remaining the same? Lond. Un. 1906.

(52) Discuss Reynolds' work on the critical velocity and on a general law of resistance, describing the experimental apparatus, and showing the connection with the experiments of Poiseuille and D'Arcy. Lond. Un. 1906.

(53) In a condenser, the water enters through a pipe (section A) at the bottom of the lower water head, passes through the lower nest of tubes, then through the upper nest of tubes into the upper water head (section B). The sectional areas at sections A and B are 0·196 and 0·95 sq. ft. respectively; the total sectional area of flow of the tubes forming the lower nest is 0·814 sq. ft., and of the upper nest 0·75 sq. ft., the number of tubes being respectively 353 and 326. The length of all the tubes is 6 feet 2 inches. When the volume of the circulating water was 1·21 c. ft. per sec., the observed difference of pressure head (by gauges) at A and B was 6·5 feet. Find the total actual head necessary to overcome frictional resistance, and

the coefficient of hydraulic resistance referred to A. If the coefficient of friction ($4f$) for the tubes is taken to be ·015, find the coefficient of hydraulic resistance for the tubes alone, and compare with the actual experiment. Lond. Un. 1906. (C_r = *head lost divided by vel. head at A.*)

(54) An open stream, which is discharging 20 c. ft. of water per second is passed under a road by a siphon of smooth stoneware pipe, the section of the siphon being cylindrical, and 2 feet in diameter. When the stream enters this siphon, the siphon descends vertically 12 feet, it then has a horizontal length of 100 feet, and again rises 12 feet. If all the bends are sharp right-angled bends, what is the total loss of head in the tunnel due to the bends and to the friction? C = 117. Lond. Un. 1907.

(55) It has been shown on page 159 that when the kinetic energy of a jet issuing from a nozzle on a long pipe line is a maximum,

$$d^4 = \frac{D^5}{8fL}.$$

Hence find the minimum diameter of a pipe that will supply a Pelton Wheel of 70 per cent. efficiency and 500 brake horse-power, the available head being 600 feet and the length of pipe 3 miles.

(56) A fire engine supplies water at a pressure of 40 lbs. per square inch by gauge, and at a velocity of 6 feet per second into a pipe 3 inches diameter. The pipe is led a distance of 100 feet to a nozzle 25 feet above the pump. If the coefficient f (of friction) in the pipe be ·01, and the actual lift of the jet is $\frac{3}{4}$ of that due to the velocity of efflux, find the actual height to which the jet will rise, and the diameter of the nozzle to satisfy the conditions of the problem.

(57) Obtain expressions (*a*) for the head lost by friction (expressed in feet of gas) in a main of given diameter, when the main is horizontal, and when the variations of pressure are not great enough to cause any important change of volume, and (*b*) for the discharge in cubic feet per second.

Apply your results to the following example:—

The main is 16 inches diameter, the length of the main is 300 yards, the density of the gas is 0·56 (that of air = 1), and the difference of pressure at the two ends of the pipe is $\frac{1}{2}$ inch of water; find:—

(*a*) The head lost in feet of gas.

(*b*) The discharge of gas per hour in cubic feet.

Weight of 1 cubic foot of air = 0·08 lb.; weight of 1 cubic foot of water 62·4 lbs.; coefficient f (of friction) for the gas against the walls of the pipe 0·005. Lond. Un. 1905.

(See page 118; substitute for w the weight of cubic foot of gas.)

(58) Three reservoirs A, B and C are connected by a pipe leading from each to a junction box P situated 450′ above datum.

The lengths of the pipes are respectively 10,000′, 5000′ and 6000′ and the levels of the still water surface in A, B and C are 800′, 600′ and 200′ above datum.

Calculate the magnitude and indicate the direction of mean velocity in each pipe, taking $v = 100\sqrt{mi}$, the pipes being all the same diameter, namely 15″. Lond. Un. 1905.

(59) A pipe 3′ 6″ diameter bends through 45 degrees on a radius of 25 feet. Determine the displacing force in the direction of the radial line bisecting the angle between the two limbs of the pipe, when the head of water in the pipe is 250 feet.

Show also that, if a uniformly distributed pressure be applied in the plane of the centre lines of the pipe, normally to the pipe on its outer surface, and of intensity

$$p_1 = \frac{49hd^2}{R+1{\cdot}75} \text{ lbs.},$$

per unit length, the bend is in equilibrium.

R = radius of bend in feet. d = diameter of pipe.
h = head of water in the pipe.

(60) Show that the energy transmitted by a long pipe is a maximum when one-third of the energy put into the pipe is lost in friction.

The energy transmitted along the pipe per second is

$$E = p\frac{\pi}{4}d^2 . v - w\frac{\pi}{4}d^2 . v\frac{4fv^2l}{2gd},$$

p being the pressure per sq. foot at the inlet end of pipe.

Differentiating and equating to zero

$$\frac{dE}{dv} = \left(p - 3w\frac{4fv^2l}{2gd}\right)\frac{\pi}{4}d^2 = 0,$$

or, head lost by friction $= \frac{1}{3}\frac{p}{w}$.

(61) For a given supply of water delivered to a pipe at a given pressure, the cost of upkeep of the pipe line may be considered as made up of the capital charges on initial cost, plus repairs, plus the cost of energy lost in the pipe line. The repairs will be practically proportional to the original cost, *i.e.* to the capital charges. The original cost of the pipe line may be assumed proportional to the diameter and to the length. The annual capital charges P are, therefore, proportional to ld, or

$$P = mld.$$

If W is the weight of water pumped per annum, the energy lost per year is proportional to

$$\frac{4flv^2W}{2g . d},$$

or, since v is proportional to W divided by the area of the pipe, the total annual cost P_1 may be written,

$$P_1 = mld + m_1\frac{4flW^3}{2gd^5}.$$

For P_1 to be a minimum, $\frac{dP_1}{dd}$ should be zero.

Therefore $$\frac{dP_1}{dd} = ml - 5m_1\frac{4flW^3}{2gd^6} = 0,$$

or, $$mld = 5 . m_1\frac{4flW^3}{2gd^5}.$$

That is, the annual cost due to charges and repairs should be equal to ·5 times the cost due to loss of energy.

If the cost of pipes is assumed proportional to d^2, P_1 is a minimum when the annual cost is $\frac{2}{5}$ of the cost of the energy lost.

CHAPTER VI.

FLOW IN OPEN CHANNELS.

117. Variety of the forms of channels.

The study of the flow of water in open channels is much more complicated than in the case of closed pipes, because of the infinite variety of the forms of the channels and of the different degrees of roughness of the wetted surfaces, varying, as they do, from channels lined with smooth boards or cement, to the irregular beds of rivers and the rough, pebble or rock strewn, mountain stream.

Attempts have been made to find formulae which are applicable to any one of these very variable conditions, but as in the case of pipes, the logarithmic formulae vary with the roughness of the pipe, so in this case the formulae for smooth regular shaped channels cannot with any degree of assurance be applied to the calculation of the flow in the irregular natural streams.

118. Steady motion in uniform channels.

The experimental study of the distribution of velocities of water flowing in open channels reveals the fact that, as in the case of pipes, the particles of water at different points in a cross section of the stream may have very different velocities, and the direction of flow is not always actually in the direction of the flow of the stream.

The particles of water have a sinuous motion, and at any point it is probable that the condition of flow is continually changing. In a channel of uniform section and slope, and in which the total flow remains constant for an appreciable time, since the same quantity of water passes each section, the mean velocity v in the direction of the stream is constant, and is the same for all the sections, and is simply equal to the discharge divided by the area of the cross section. This mean velocity is purely an artificial quantity, and does not represent, either in direction or magnitude, the velocity of the particles of water as they pass the section.

Experiments with current meters, to determine the distribution of velocity in channels, show, however, that at any point in the cross section, the component of velocity in a direction parallel to the direction of flow remains practically constant. The consideration of the motion is consequently simplified by assuming that the water moves in parallel fillets or stream lines, the velocities in which are different, but the velocity in each stream line remains constant. This is the assumption that is made in investigating so-called rational formulae for the velocity of flow in channels, but it should not be overlooked that the actual motion may be much more complicated.

119. Formula for the flow when the motion is uniform in a channel of uniform section and slope.

On this assumption, the conditions of flow at similarly situated points C and D in any two cross sections AA and BB, Figs. 112 and 113, of a channel of uniform slope and section are exactly the same; the velocities are equal, and since C and D are at the same distance below the free surface the pressures are also equal. For the filament CD, therefore,

$$\frac{p_C}{w} + \frac{v_C^2}{2g} = \frac{p_D}{w} + \frac{v_D^2}{2g},$$

and therefore, since the same is true for any other filament,

$$\Sigma\left(\frac{p}{w} + \frac{v^2}{2g}\right)$$

is constant for the two sections.

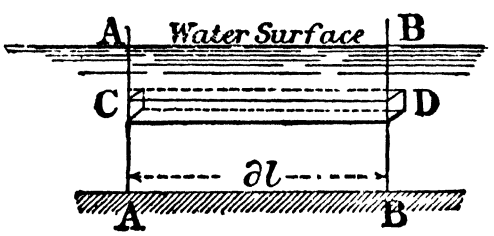

Fig. 112.

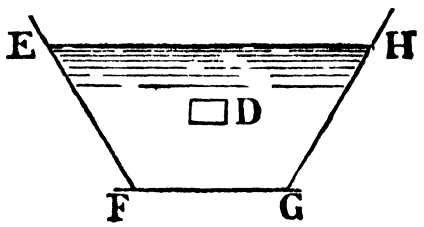

Fig. 113.

Let v be the mean velocity of the stream, i the fall per foot length of the surface of the water, or the slope, ∂l the length between AA and BB, ω the cross sectional area EFGH of the stream, P the wetted perimeter, *i.e.* the length EF + FG + GH, and w the weight of a cubic foot of water.

Let $\frac{\omega}{P} = m$ be called the hydraulic mean depth.

Let ∂z be the fall of the surface between AA and BB. Since the slope is small $\partial z = i \,.\, \partial l$.

If Q cubic feet per second fall from AA to BB, the work done upon it by gravity will be:

$$wQ\partial z = w \,.\, \omega \,.\, v \,.\, i \,.\, \partial l.$$

Then, since $$\Sigma\left(\frac{p}{w} + \frac{v^2}{2g}\right)$$

is constant for the two sections, the work done by gravity must be equal to the work done by the frictional and other resistances opposing the motion of the water.

As remarked above, all the filaments have not the same velocity, so that there is relative motion between consecutive filaments, and since water is not a perfect fluid some portion of the work done by gravity is utilised in overcoming the friction due to this relative motion. Energy is also lost, due to the cross currents or eddy motions, which are neglected in assuming stream line flow, and some resistance is also offered to the flow by the air on the surface of the water.

The principal cause of loss is, however, the frictional resistance of the sides of the channel, and it is assumed that the whole of work done by gravity is utilised in overcoming this resistance.

Let $F \,.\, v$ be the work done per unit area of the sides of the channel, v being the mean velocity of flow. F is often called the frictional resistance per unit area, but this assumes that the relative velocity of the water and the sides of the channel is equal to the mean velocity, which is not correct.

The area of the surface of the channel between AA and BB is $P \,.\, \partial l$.

Then, $$w\omega v i \partial l = F v P \partial l,$$

therefore $$\frac{\omega}{P} i = \frac{F}{w},$$

or $$mi = \frac{F}{w}.$$

F is found by experiment to be a function of the velocity and also of the hydraulic mean depth, and may be written

$$F = bf(v)f(m),$$

b being a numerical coefficient.

Since for water w is constant $\frac{b}{w}$ may be replaced by k and

therefore, $$mi = k \,.\, f(v)\, f(m).$$

The form of $f(v)\, f(m)$ must be determined by experiment.

120. Formula of Chezy.

The first attempts to determine the flow of water in channels

with precision were probably those of Chezy made on an earthen canal, at Coupalet in 1775, from which he concluded that

$$f(v) = v^2 \text{ and } f(m) = 1,$$

and therefore

$$mi = kv^2 \quad \text{.....(1).}$$

Writing C for $\frac{1}{\sqrt{k}}$

$$v = C\sqrt{mi},$$

which is known as the Chezy formula, and has already been given in the chapter on pipes.

121. Formulae of Prony and Eytelwein.

Prony adopted the same formula for channels and for pipes, and assumed that F was a function of v and also of v^2, and therefore,

$$mi = av + bv^2.$$

By an examination of the experiments of Chezy and those of Du Buat* made in 1782 on wooden channels, 20 inches wide and less than 1 foot deep, and others on the Jard canal and the river Hayne, Prony gave to a and b the values

$$a = \cdot 000044,$$
$$b = \cdot 000094.$$

This formula may be written

$$mi = \left(\frac{a}{v} + b\right)v^2,$$

or

$$v = \frac{1}{\sqrt{\frac{a}{v} + b}}\sqrt{mi}.$$

The coefficient C of the Chezy formula is then, according to Prony, a function of the velocity v.

If the first term containing v be neglected, the formula is the same as that of Chezy, or

$$v = 103\sqrt{mi}.$$

Eytelwein by a re-examination of the same experiments together with others on the flow in the rivers Rhine† and Weser‡, gave values to a and b of

$$a = \cdot 000024,$$
$$b = \cdot 0001114.$$

Neglecting the term containing a,

$$v = 95\sqrt{mi}.$$

* *Principes d'hydraulique.* See also pages 231—233.
† Experiments by Funk, 1803–6.
‡ Experiments by Brauings, 1790–92.

As in the case of pipes, Prony and Eytelwein incorrectly assumed that the constants a and b were independent of the nature of the bed of the channel.

122. Formula of Darcy and Bazin.

After completing his classical experiments on flow in pipes M. Darcy commenced a series of experiments upon open channels —afterwards completed by M. Bazin—to determine, how the frictional resistances varied with the material with which the channels were lined and also with the form of the channel.

Experimental channels of semicircular and rectangular section were constructed at Dijon, and lined with different materials. Experiments were also made upon the flow in small earthen channels (branches of the Burgoyne canal), earthen channels lined with stones, and similar channels the beds of which were covered with mud and aquatic herbs. The results of these experiments, published in 1858 in the monumental work, *Recherches Hydrauliques*, very clearly demonstrated the inaccuracy of the assumptions of the old writers, that the frictional resistances were independent of the nature of the wetted surface.

From the results of these experiments M. Bazin proposed for the coefficient k, section 120, the form used by Darcy for pipes,

$$k = \left(\alpha + \frac{\beta}{m}\right),$$

α and β being coefficients both of which depend upon the nature of the lining of the channel.

Thus,
$$mi = \left(\alpha + \frac{\beta}{m}\right)v^2$$

or
$$v = \frac{1}{\sqrt{\alpha + \frac{\beta}{m}}}\sqrt{mi}.$$

The coefficient C in the Chezy formula is thus made to vary with the hydraulic mean depth m, as well as with the roughness of the surface.

It is convenient to write the coefficient k as

$$k = \alpha\left(1 + \frac{\beta}{\alpha m}\right).$$

Taking the unit as 1 foot, Bazin's values for α and β, and values of k are shown in Table XVIII.

It will be seen that the influence of the second term increases very considerably with the roughness of the surface.

123. Ganguillet and Kutter, from an examination of Bazin's

experiments, together with some of their own, found that the coefficient C in the Chezy formula could be written in the form

$$C = a\left(1 - \frac{b}{b + \sqrt{m}}\right),$$

in which a is a constant for all channels, and b is a coefficient of roughness.

TABLE XVIII.

Showing the values of α, β, and k in Bazin's formula for channels.

	α	β	k
Planed boards and smooth cement	·0000457	·0000045	$\cdot0000457\left(1+\frac{0\cdot098}{m}\right)$
Rough boards, bricks and concrete	·0000580	·0000133	$\cdot000058\left(1+\frac{0\cdot23}{m}\right)$
Ashlar masonry	·0000730	·00006	$\cdot000073\left(1+\frac{\cdot82}{m}\right)$
Earth	·0000854	·00035	$\cdot0000854\left(1+\frac{4\cdot1}{m}\right)$
Gravel (Ganguillet and Kutter)	·0001219	·00070	$\cdot0001219\left(1+\frac{5\cdot75}{m}\right)$

The results of experiments by Humphreys and Abbott upon the flow in the Mississippi* were, however, found to give results inconsistent with this formula and also that of Bazin.

They then proposed to make the coefficient depend upon the slope of the channel as well as upon the hydraulic mean depth.

From experiments which they conducted in Switzerland, upon the flow in rough channels of considerable slope, and from an examination of the experiments of Humphreys and Abbott on the flow in the Mississippi, in which the slope is very small, and a large number of experiments on channels of intermediate slopes, they gave to the coefficient C, the unit being 1 foot, the value

$$C = \frac{41\cdot6 + \frac{0\cdot00281}{i} + \frac{1\cdot811}{n}}{1 + \left(41\cdot6 + \frac{\cdot00281}{i}\right)\frac{n}{\sqrt{m}}},$$

in which n is a coefficient of roughness of the channel and has the values given in Tables XIX and XIX A.

* *Report on the Hydraulics of the Mississippi River*, 1861; *Flow of water in rivers and canals*, Trautwine and Hering, 1893.

TABLE XIX.

Showing values of n in the formula of Ganguillet and Kutter.

Channel	n
Very smooth, cement and planed boards	·009 to ·01
Smooth, boards, bricks, concrete	·012 to ·013
Smooth, covered with slime or tuberculated	·015
Rough ashlar or rubble masonry	·017 to ·019
Very firm gravel or pitched with stones	·02
Earth, in ordinary condition free from stones and weeds ...	·025
Earth, not free from stones and weeds	·030
Gravel in bad condition	·035 to ·040
Torrential streams with rough stony beds	·05

TABLE XIX A.

Showing values of n in the formula of Ganguillet and Kutter, determined from recent experiments.

	n
Rectangular wooden flume, very smooth	·0098
Wood pipe 6 ft. diameter	·0132
Brick, washed with cement, basket shaped sewer, 6′×6′ 8″, nearly new	·0130
Brick, washed with cement, basket shaped sewer, 6′×6′ 8″, one year old	·0148
Brick, washed with cement, basket shaped sewer, 6′×6′ 8″, four years old	·0152
Brick, washed with cement, circular sewer, 9 ft. diameter, nearly new	·0116
Brick, washed with cement, circular sewer, 9 ft. diameter, four years old	·0133
Old Croton aqueduct, lined with brick	·015
New Croton aqueduct*	·012
Sudbury aqueduct	·01
Glasgow aqueduct, lined with cement	·0124
Steel pipe, wetted, clean, 1897 (mean)	·0144
Steel pipe, 1899 (mean)	·0155

This formula has found favour with English, American and German engineers, but French writers favour the simpler formula of Bazin.

It is also of importance to notice that later experiments upon the Mississippi by a special commission, and others on the flow of the Irrawaddi and various European rivers, are inconsistent with

* *Report New York Aqueduct Commission.*

the early experiments of Humphreys and Abbott, to which Ganguillet and Kutter attached very considerable importance in framing their formula, and the later experiments show, as described later, that the experimental determination of the flow in, and the slope of, large natural streams is beset with such great difficulties, that any formula deduced for channels of uniform section and slope cannot with confidence be applied to natural streams, and *vice versâ*.

The application of this formula to the calculation of uniform channels gives, however, excellent results, and providing the value of n is known, it can be used with confidence.

It is, however, very cumbersome, and does not appear to give results more accurate than a new and simpler formula suggested recently by Bazin and which is given in the next section.

124. M. Bazin's later formula for the flow in channels.

M. Bazin has recently (*Annales des Ponts et Chaussées*, 1897, Vol. IV. p. 20), made a careful examination of practically all the available experiments upon channels, and has proposed for the coefficient C in the Chezy formula a form originally proposed by Ganguillet and Kutter, which he writes

$$C = \frac{1}{\alpha + \frac{\beta}{\sqrt{m}}},$$

or

$$C = \frac{\frac{1}{\alpha}}{1 + \frac{\beta}{\alpha\sqrt{m}}},$$

in which α is constant for all channels and β is a coefficient of roughness of the channel.

Taking 1 metre as the unit $\alpha = \cdot 0115$, and writing γ for $\frac{\beta}{\alpha}$,

$$C = \frac{87}{1 + \frac{\gamma}{\sqrt{m}}} \quad \text{.....(1)},$$

or when the unit is one foot,

$$C = \frac{157\cdot 5}{1 + \frac{\gamma}{\sqrt{m}}} \quad \text{.....(2)},$$

the value of γ in (2) being $1\cdot 811\gamma$, in formula (1).

The values of γ as found by Bazin for various kinds of channels are shown in Table XX, and in Table XXI are shown values of

C, to the nearest whole number, as deduced from Bazin's coefficients for values of m from ·2 to 50.

For the channels in the first four columns only a very few experimental values for C have been obtained for values of m greater than 3, and none for m greater than 7·3. For the earth channels, experimental values for C are wanting for small values of m, so that the values as given in the table when m is greater than 7·3 for the first four columns, and those for the first three columns for m less than 1, are obtained on the assumption, that Bazin's formula is true for all values of m within the limits of the table.

TABLE XX.

Values of γ in the formula,

$$C = \frac{157.5}{1 + \frac{\gamma}{\sqrt{m}}}.$$

	γ	
	unit metre	unit foot
Very smooth surfaces of cement and planed boards ...	·06	·1085
Smooth surfaces of boards, bricks, concrete	·16	·29
Ashlar or rubble masonry	·46	·83
Earthen channels, very regular or pitched with stones, tunnels and canals in rock	·85	1·54
Earthen channels in ordinary condition	1·30	2·35
Earthern channels presenting an exceptional resistance, the wetted surface being covered with detritus, stones or weed, or very irregular rocky surface	1·75	3·17

125. Glazed earthenware pipes.

Vellut* from experiments on the flow in earthenware pipes has given to C the value

$$C = \frac{41{\cdot}7 + \frac{1}{n}}{1 + \frac{75{\cdot}5n}{\sqrt{m}}},$$

in which $n = {\cdot}0072$,

or $$C = \frac{181}{1 + \frac{{\cdot}54}{\sqrt{m}}}.$$

This gives values of C, not very different from those given by Bazin's formula when γ is 0·29.

In Table XXI, column 2, glazed earthenware pipes have been included with the linings given by Bazin.

* *Proc. I. C. E.*, Vol. CLI. p. 482.

TABLE XXI.

Values of C in the formula $v = C\sqrt{mi}$ calculated from Bazin's formula, the unit of length being 1 foot,

$$C = \frac{157{\cdot}5}{1 + \frac{\gamma}{\sqrt{m}}}.$$

Hydraulic mean depth m.	Channels						
	Very smooth cement and planed boards	Smooth boards, brick, concrete, glazed earthenware pipes	Smooth but dirty brick, concrete	Ashlar masonry	Earth canals in very good condition, and canals pitched with stones	Earth canals in ordinary condition	Earth canals exceptionally rough
	$\gamma = {\cdot}1085$	$\gamma = {\cdot}29$	$\gamma = {\cdot}50$	$\gamma = {\cdot}83$	$\gamma = 1{\cdot}54$	$\gamma = 2{\cdot}35$	$\gamma = 3{\cdot}17$
·2	127	96	74	55	35	25	19
·3	131	103	82	63	41	30	23
·4	135	108	88	68	46	32	26
·5	137	112	92	72	50	37	29
·6	139	116	96	76	53	39	31
·8	141	119	101	82	58	43	35
1·0	142	122	105	86	62	47	38
1·3	144	126	109	91	67	51	42
1·5	145	128	112	94	70	54	44
1·75	146	130	114	97	73	57	46
2·0	147	132	116	99	76	59	49
2·5	148	134	119	103	80	64	53
3·0	149	136	122	107	84	67	56
4·0	150	138	126	111	89	72	61
5·0	151	140	129	115	94	77	65
6·0	151	142	131	118	98	80	69
8·0	152	144	134	122	102	86	74
10·0	153	145	136	125	106	90	79
12·0					109	94	82
15·0					113	98	87
20·0					117	103	92
30·0					123	110	100
50·0					129	119	108

126. Bazin's method of determining α and β.

The method used by Bazin to determine the values of α and β is of sufficient interest and importance to be considered in detail.

He first calculated values of $\frac{1}{\sqrt{m}}$ and $\frac{\sqrt{mi}}{v}$ from experimental data, and plotted these values as shown in Fig. 114, $\frac{1}{\sqrt{m}}$ as abscissae, and $\frac{\sqrt{mi}}{v}$ as ordinates.

As will be seen on reference to the figure, points have been plotted for four classes of channels, and the points lie close to four straight lines passing through a common point P on the axis of y.

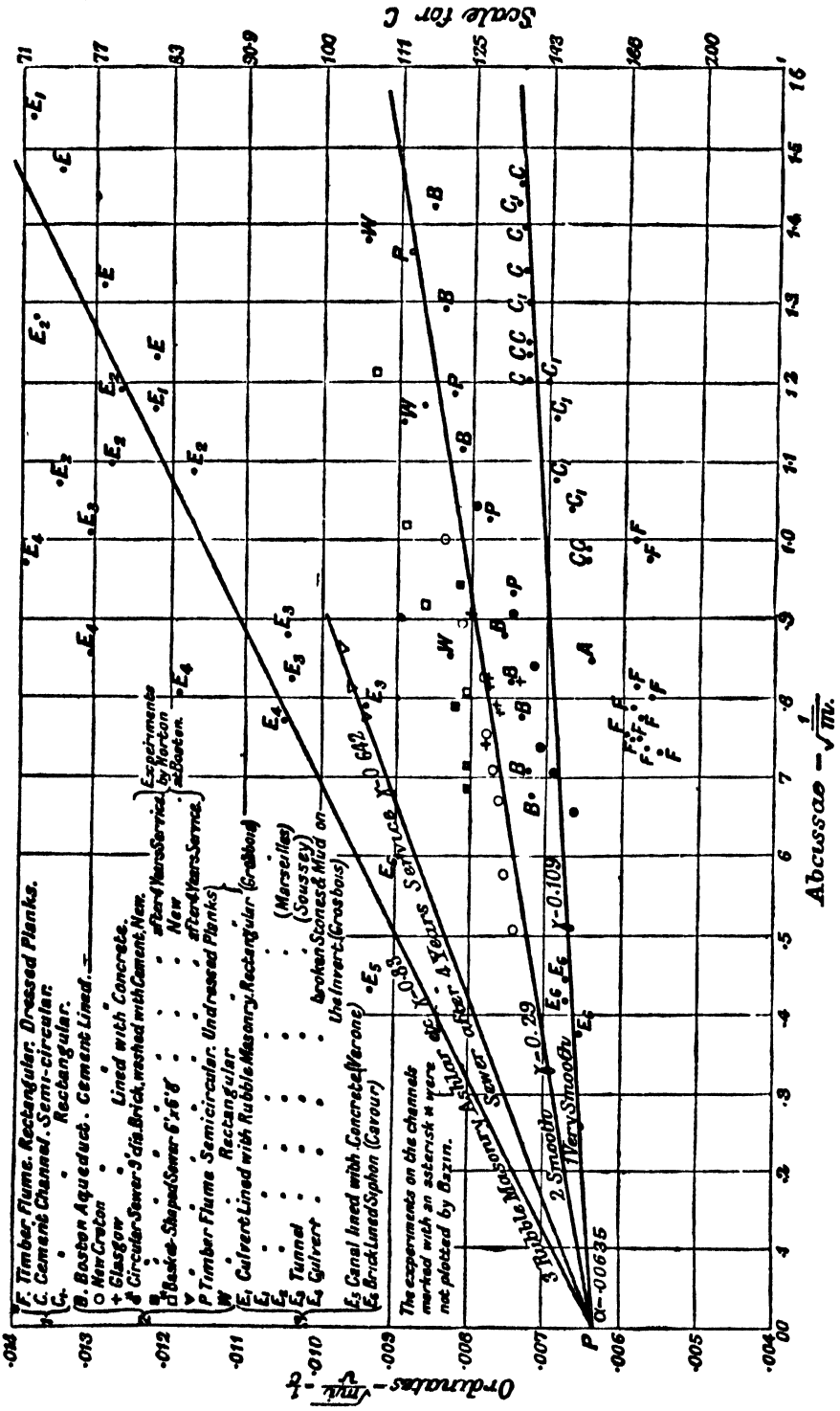

Fig. 114. Plottings to determine the values of α and γ, in the formula, $C = \frac{1}{\frac{\alpha}{1 + \frac{\gamma}{\sqrt{m}}}}$.

The equation to each of these lines is

$$y = \alpha + \beta x,$$

or
$$\frac{\sqrt{mi}}{v} = \alpha + \frac{\beta}{\sqrt{m}},$$

α being the intercept on the axis of y, or the ordinate when $\frac{1}{\sqrt{m}}$ is zero, and β, which is variable, is the inclination of any one of these lines to the axis of x; for when $\frac{1}{\sqrt{m}}$ is zero, $\frac{\sqrt{mi}}{v} = \alpha$, and transposing the equation,

$$\beta = \left(\frac{\sqrt{mi}}{v} - \alpha\right)\sqrt{m},$$

which is clearly the tangent of the angle of inclination of the line to the axis of x.

It should be noted, that since $\frac{\sqrt{mi}}{v} = \frac{1}{C}$, the ordinates give actual experimental values of $\frac{1}{C}$, or by inverting the scale, values of C. Two scales for ordinates are thus shown.

In addition to the points shown on the diagram, Fig. 114, Bazin plotted the results of some hundreds of experiments for all kinds of channels, and found that the points lay about a series of lines, all passing through the point P, Fig. 114, for which α is ·00635, and the values of $\frac{\beta}{\alpha}$, *i.e.* γ, are as shown in Table XX.

Bazin therefore concluded, that for all channels

$$\frac{\sqrt{mi}}{v} = \cdot 00635 + \frac{\beta}{\sqrt{m}},$$

the value of β depending upon the roughness of the channel.

For very smooth channels in cement and planed boards, Bazin plotted a large number of points, not shown in Fig. 114, and the line for which $\gamma = \cdot 109$ passes very nearly through the centre of the zone occupied by these points.

The line for which γ is 0·29 coincides well with the mean of the plotted points for smooth channels, but for some of the points γ may be as high as 0·4.

It is further of interest to notice, that where the surfaces and sections of the channels are as nearly as possible of the same character, as for instance in the Boston and New York aqueducts, the values of the coefficient C differ by about 6 per cent., the difference being probably due to the pointing of the sides and arch of the New York aqueduct not being so carefully executed as for the Boston aqueduct. By simply washing the walls of the latter with cement, Fteley found that its discharge was increased 20 per cent.

γ is also greater for rectangular-shaped channels, or those which approximate to the rectangular form, than for those of circular form, as is seen by comparing the two channels in wood W and P, and also the circular and basket-shaped sewers.

M. Bazin also found that γ was slightly greater for a very smooth rectangular channel lined with cement than for one of semicircular section.

In the figure the author has also plotted the results of some recent experiments, which show clearly the effect of slime and tuberculations, in increasing the resistance of very smooth channels. The value of γ for the basket-shaped sewer lined with brick, washed with cement, rising from ·4 to ·642 during 4 years' service.

127. Variations in the coefficient C.

For channels lined with rubble, or similar materials, some of the experimental points give values of C differing very considerably from those given by points on the line for which γ is 0·83, Fig. 114, but the values of C deduced from experiments on particular channels show similar discrepancies among themselves.

On reference to Bazin's original paper it will be seen that, for channels in earth, there is a still greater variation between the experimental values of C, and those given by the formula, but the experimental results in these cases, for any given channel, are even more inconsistent amongst themselves.

An apparently more serious difficulty arises with respect to Bazin's formula in that C cannot be greater than 157·5. The maximum value of the hydraulic mean depth m recorded in any series of experiments is 74·3, obtained by Humphreys and Abbott from measurements of the Mississippi at Carrollton in 1851. Taking γ as 2·35 the maximum value for C would then be 124. Humphreys and Abbott deduced from their experiments values of C as large as 254. If, therefore, the experiments are reliable the formula of Bazin evidently gives inaccurate results for exceptional values of m.

The values of C obtained at Carrollton are, however, inconsistent with those obtained by the same workers at Vicksburg, and they are not confirmed by later experiments carried out at Carrollton by the Mississippi commission. Further the velocities at Carrollton were obtained by double floats, and, according to Gordon*, the apparent velocities determined by such floats should be at least increased, when the depth of the water is large, by ten per cent.

Bazin has applied this correction to the velocities obtained by

* Gordon, *Proceedings Inst. Civil Eng.*, 1893.

Humphreys and Abbott at Vicksburg and also to those obtained by the Mississippi Commission at Carrollton, and shows, that the maximum value for C is then, probably, only 122.

That the values of C as deduced from the early experiments on the Mississippi are unreliable, is more than probable, since the smallest slope, as measured, was only ·0000034, which is less than $\frac{1}{5}$ inch per mile. It is almost impossible to believe that such small differences of level could be measured with certainty, as the smallest ripple would mean a very large percentage error, and it is further probable that the local variations in level would be greater than this measured difference for a mile length. Further, assuming the slope is correct, it seems probable that the velocity under such a fall would be less than some critical velocity similar to that obtained in pipes, and that the velocity instead of being proportional to the square root of the slope i, is proportional to i. That either the measured slope was unreliable, or that the velocity was less than the critical velocity, seems certain from the fact, that experiments at other parts of the Mississippi, upon the Irrawaddi by Gordon, and upon the large rivers of Europe, in no case give values of C greater than 124.

The experimental evidence for these natural streams tends, however, clearly to show, that the formulae, which can with confidence be applied to the calculation of flow in channels of definite form, cannot with assurance be used to determine the discharge of rivers. The reason for this is not far to seek, as the conditions obtaining in a river bed are generally very far removed from those assumed, in obtaining the formula. The assumption that the motion is uniform over a length sufficiently great to be able to measure with precision the fall of the surface, must be far from the truth in the case of rivers, as the irregularities in the cross section must cause a corresponding variation in the mean velocities in those sections.

In the derivation of the formula, frictional resistances only are taken into account, whereas a considerable amount of the work done on the falling water by gravity is probably dissipated by eddy motions, set up as the stream encounters obstructions in the bed of the river. These eddy motions must depend very much on local circumstances and will be much more serious in irregular channels and those strewn with weeds, stones or other obstructions, than in the regular channels. Another and probably more serious difficulty is the assumption that the slope is uniform throughout the whole length over which it is measured, whereas the slope between two cross sections may vary considerably between bank and bank. It is also doubtful whether locally

there is always equilibrium between the resisting and accelerating forces. In those cases, therefore, in which the beds are rocky or covered with weeds, or in which the stream has a very irregular shape, the hypotheses of uniform motion, slope, and section, will not even be approximately realised.

128. Logarithmic formula for the flow in channels.

In the formulae discussed, it has been assumed that the frictional resistance of the channel varies as the square of the velocity, and in order to make the formulae fit the experiments, the coefficient C has been made to vary with the velocity.

As early as 1816, Du Buat* pointed out, that the slope i increased at a less rate than the square of the velocity, and half a century later St Venant proposed the formula

$$mi = \cdot 000401\, v^{\frac{21}{11}}.$$

To determine the discharge of brick-lined sewers, Mr Santo Crimp has suggested the formula

$$v = 124 m^{0\cdot 67} i^{0\cdot 5}$$

and experiments show that for sewers that have been in use some time it gives good results. The formula may be written

$$i = \frac{0\cdot 00006 v^2}{m^{1\cdot 34}}.$$

An examination of the results of experiments, by logarithmic plotting, shows that in any uniform channel the slope

$$i = \frac{kv^n}{m^p},$$

k being a numerical coefficient which depends upon the roughness of the surface of the channel, and n and p also vary with the nature of the surface.

Therefore, in the formula,

$$mi = kf(v)f(m),$$

$$f(v)f(m) = \frac{v^n}{m^{p-1}}.$$

From what follows it will be seen that n varies between 1·75 and 2·1, while p varies between 1 and 1·5.

Since m is constant, the formula $i = \frac{kv^n}{m^p}$ may be written $i = bv^n$, b being equal to $\frac{k}{m^p}$.

Therefore $\log i = \log b + n \log v.$

* *Principes d'Hydraulique*, Vol. I. p. 29, 1816.

In Fig. 115 are shown plotted the logarithms of i and v obtained from an experiment by Bazin on the flow in a semi-circular cement-lined pipe. The points lie about a straight line, the tangent of the inclination of which to the axis of v is 1·96 and the intercept on the axis of i through $v=1$, or $\log v=0$, is ·0000808.

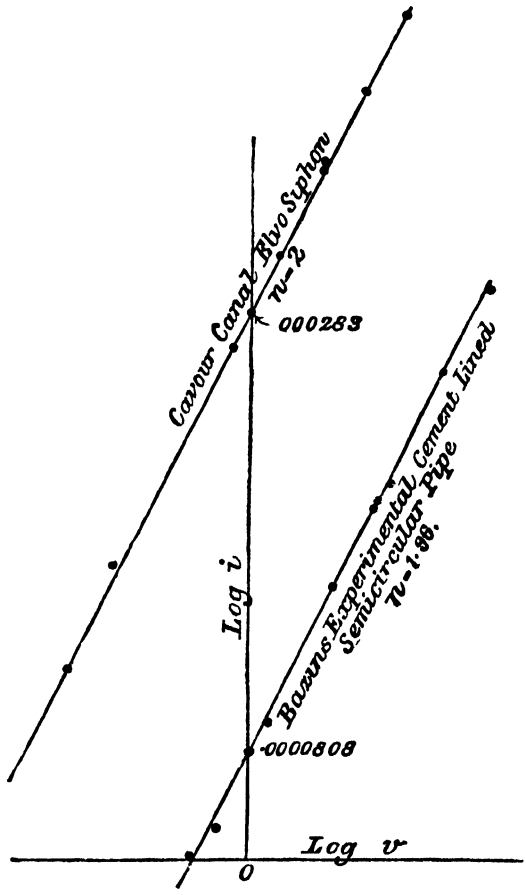

Fig. 115. Logarithmic plottings of i and v to determine the index n in the formula for channels, $i=\frac{kv^n}{m^p}$.

For this experimental channel, therefore,

$$i = \cdot 00008085 v^{1\cdot 96}.$$

In the same figure are shown the plottings of $\log i$ and $\log v$ for the siphon-aqueduct* of St Elvo lined with brick and for which m is 2·78 feet. In this case n is 2 and b is ·000283. Therefore

$$i = \cdot 000283 v^2.$$

If, therefore, values of v and i are determined for a channel, while m is kept constant, n can be found.

* *Annales des Ponts et Chaussées*, Vol. IV. 1897.

To determine the ratio $\frac{n}{p}$. The formula,

$$i = \frac{kv^n}{m^p},$$

may be written in the form,

$$m = \left(\frac{k}{i}\right)^{\frac{1}{p}} v^{\frac{n}{p}},$$

or

$$\log m = \log \left(\frac{k}{i}\right)^{\frac{1}{p}} + \frac{n}{p} \log v.$$

By determining experimentally m and v, while the slope i is kept constant, and plotting $\log m$ as ordinates and $\log v$ as abscissae, the plottings lie about a straight line, the tangent of the inclination of which to the axis of v is equal to $\frac{n}{p}$, and the intercept on the axis of m is equal to

$$\left(\frac{k}{i}\right)^{\frac{1}{p}}.$$

In Fig. 116 are shown the logarithmic plottings of m and v for a number of channels, of varying degrees of roughness.

The ratio $\frac{n}{p}$ varies considerably, and for very regular channels increases with the roughness of the channel, being about 1·40 for very smooth channels, lined with pure cement, planed wood or cement mixed with very fine sand, 1·54 for channels in unplaned wood, and 1·635 for channels lined with hard brick, smooth concrete, or brick washed with cement. For channels of greater roughness, $\frac{n}{p}$ is very variable and appears to become nearly equal to or even less than its value for smooth channels. Only in one case does the ratio $\frac{n}{p}$ become equal to 2, and the values of m and v for that case are of very doubtful accuracy.

As shown above, from experiments in which m is kept constant, n can be determined, and since by keeping i constant $\frac{n}{p}$ can be found, n and p can be deduced from two sets of experiments.

Unfortunately, there are wanting experiments in which m is kept constant, so that, except for a very few cases, n cannot directly be determined.

There is, however, a considerable amount of experimental data for channels similarly lined, and of different slopes, but here

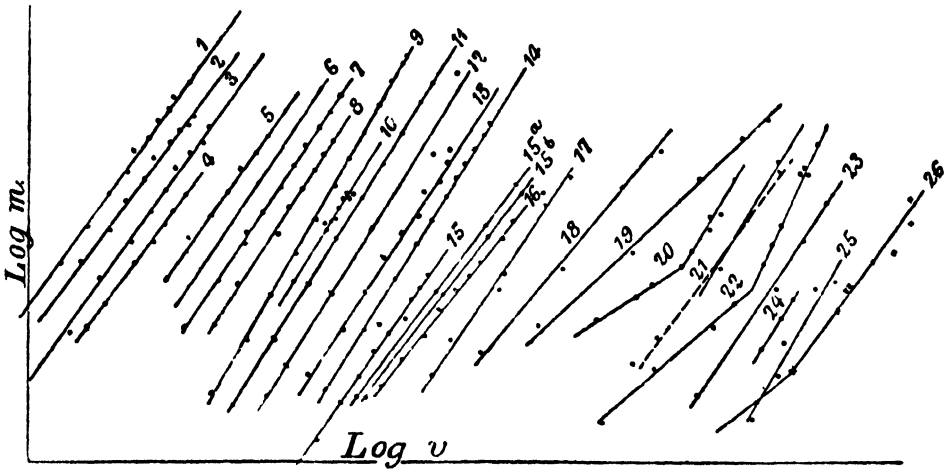

Fig. 116. Logarithmic plottings of m and v to determine the ratio $\frac{n}{p}$ in the formula $i=\frac{kv^n}{m^p}$.

TABLE XXII.

Particulars of channels, plottings for which are shown in Fig. 116.

		$\frac{n}{p}$
1.	Semicircular channel, very smooth, lined with wood	1·45
2.	,, ,, ,, ,, ,, ,, cement mixed with very fine sand	1·36
3.	Rectangular channel, very smooth, lined with cement	1·44
4.	,, ,, ,, ,, ,, ,, wood, 1′ 7″ wide ...	1·38
5.	,, ,, smooth ,, ,, ,, slope ·00208 ...	1·54
6.	,, ,, ,, ,, ,, ,, ,, ·0043 ...	1·54
7.	,, ,, ,, ,, ,, ,, ,, ·0049 ...	1·54
8.	,, ,, ,, ,, ,, ,, ,, ·00824 ...	1·54
9.	New Croton aqueduct, smooth, lined with bricks (Report New York Water Supply)	1·74
10.	Glasgow aqueduct, smooth, lined with concrete (*Proc. I. C. E.* 1896)	1·635
11.	Sudbury ,, ,, ,, ,, brick well pointed (*Tr. Am. S. C. E.* 1883)	1·635
12.	Boston sewer, circular, smooth, lined with brick washed with cement (*Tr. Am.S. C. E.* 1901)	1·635
13.	Rectangular channel, smooth, lined with brick	1·635
14.	,, ,, ,, ,, ,, wood	1·655
15.	,, ,, ,, ,, ,, small pebbles	1·49
15*a*.	Rectangular sluice channel lined with hammered ashlar	1·36
15*b*.	,, ,, ,, ,, ,, ,, ,, ...	1·36
16.	,, channel lined with large pebbles	1·29
17.	Torlonia tunnel, rock, partly lined	1·49
18.	Ordinary channel lined with stones covered with mud and weeds ...	1·18
19.	,, ,, ,, ,, ,, ,, ,, ,, ,, ,, ...	·94
20.	River Weser	1·615
21.	,, ,, ...	1·65
22.	,, ,, ...	2·1
23.	Earth channel. Gros bois	1·49
24.	Cavour canal	1·5
25.	River Seine	1·37

again, as will appear in the context, a difficulty is encountered, as even with similarly lined channels, the roughness is in no two cases exactly the same, and as shown by the plottings in Fig. 116, no two channels of any class give exactly the same values for $\frac{n}{p}$, but for certain classes the ratio is fairly constant.

Taking, for example, the wooden channels of the group (Nos. 5 to 8), the values of $\frac{n}{p}$ are all nearly equal to 1·54.

The plottings for these channels are again shown in Fig. 117. The intercepts on the axis of m vary from 0·043 to 0·14.

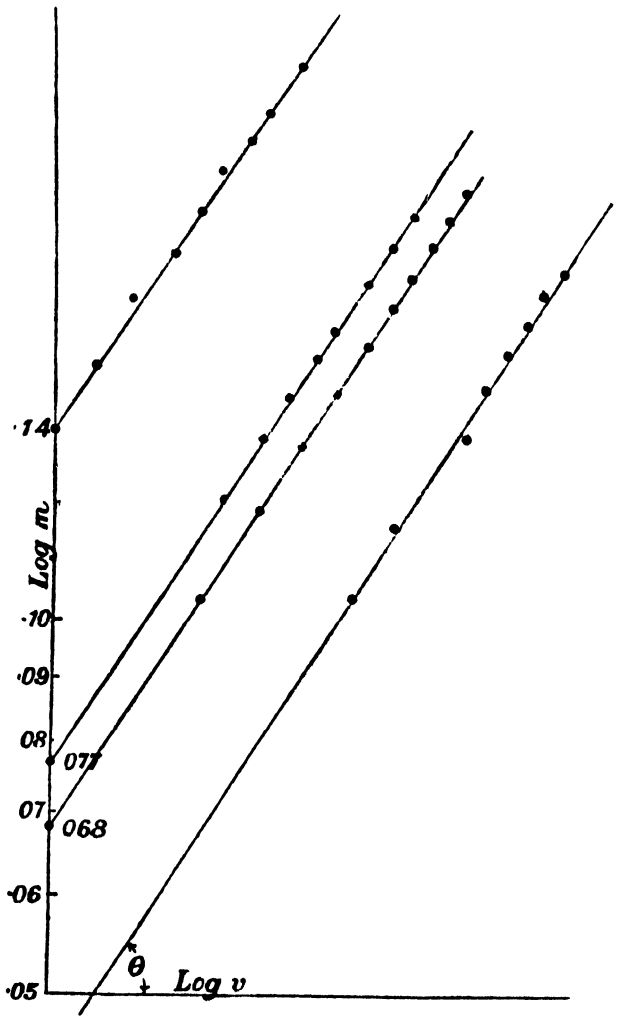

Fig. 117. Logarithmic plottings to determine the ratio $\frac{n}{p}$ for smooth channels.

Let the intercepts on the axis of m be denoted by y, then,

$$y = \left(\frac{k}{i}\right)^{\frac{1}{p}},$$

and $$\log y = \frac{1}{p}\log k - \frac{1}{p}\log i.$$

If k and p are constant for these channels, and $\log i$ and $\log y$ are plotted as abscissae and ordinates, the plottings should lie about a straight line, the tangent of the inclination of which to the axis of i is $\frac{1}{p}$, and when $\log y = 0$, or y is unity, the abscissa $i = k$, *i.e.* the intercept on the axis of i is k.

In Fig. 118 are shown the plottings of $\log i$ and $\log y$ for these channels, from which $p = 1{\cdot}14$ approximately, and $k = {\cdot}00023$. Therefore, n is approximately 1·76, and taking $\frac{n}{p}$ as 1·54

$$i = \frac{{\cdot}00023 v^{1{\cdot}76}}{m^{1{\cdot}14}}.$$

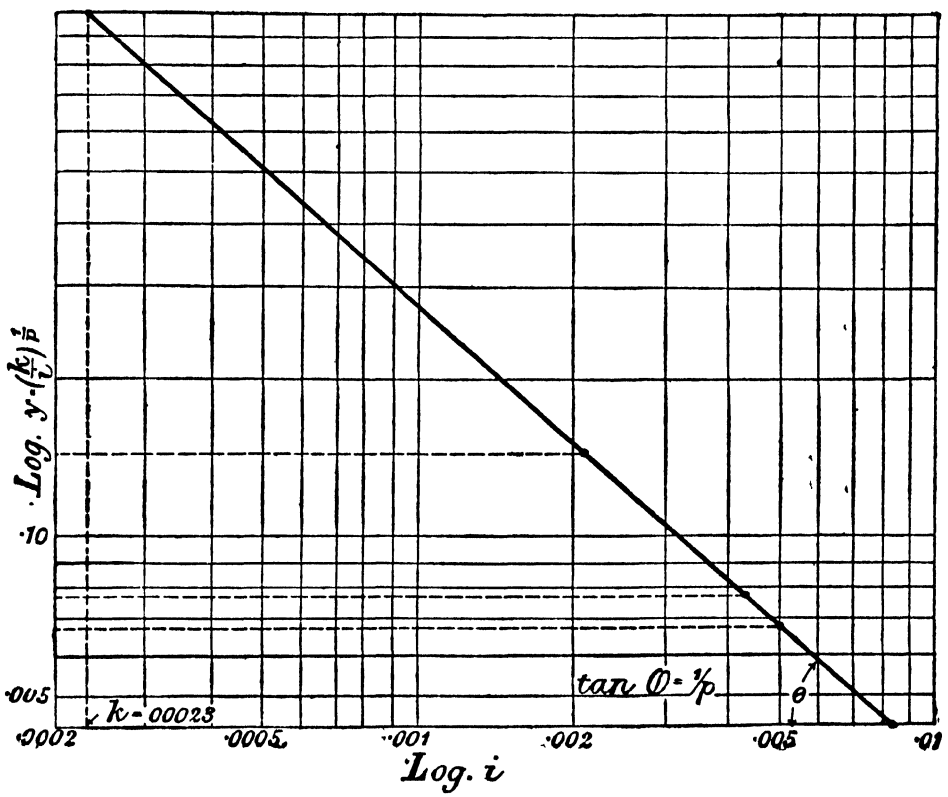

Fig. 118. Logarithmic plottings to determine the value of p for smooth channels, in the formula $i = \frac{kv^n}{m^p}$.

Since the ratio $\frac{n}{p}$ is not exactly 1·54 for all these channels, the values of n and p cannot be exactly correct for the four channels, but, as will be seen on reference to Table XXIII, in which are shown values of v as observed and as calculated by the formula, the calculated and observed values of v agree very nearly.

TABLE XXIII.

Values of v, for rectangular channels lined with wood, as determined experimentally, and as calculated from the formula

$$i = \cdot 00023 \frac{v^{1\cdot 76}}{m^{1\cdot 14}}.$$

Slope ·00208			Slope ·0049			Slope ·00824		
m in metres	v observed metres per sec.	v calculated metres per sec.	m in metres	v observed metres per sec.	v calculated metres per sec.	m in metres	v observed metres per sec.	v calculated metres per sec.
0·1381	0·962	0·972	0·1042	1·325	1·314	·0882	1·594	1·589
·1609	1·076	1·07	·1224	1·479	1·459	·1041	1·776	1·764
·1832	1·152	1·165	·1382	1·612	1·58	·1197	1·902	1·932
·1976	1·259	1·223	·1535	1·711	1·690	·1313	2·053	2·051
·2146	1·324	1·290	·1668	1·818	1·782	·1420	2·186	2·158
·2313	1·374	1·354	·1789	1·898	1·858	·1543	2·268	2·275
·2441	1·440	1·402	·1913	1·967	1·947	·1649	2·357	2·377
·2578	1·487	1·452	·2018	2·045	2·014	·1744	2·447	2·460
·2681	1·552	1·49	·2129	2·102	2·089	·1842	2·518	2·553
·2809	1·587	1·552	·2215	2·179	2·143	·1919	2·612	2·618

As a further example, which also shows how n and p increase with the roughness of the channel, consider two channels built in hammered ashlar, for which the logarithmic plottings of m and v are shown in Fig. 116, Nos. 15 a and 15 b, and $\frac{n}{p}$ is 1·36.

The slopes of these channels are ·101 and ·037. By plotting $\log i$ and $\log y$, p is found to be 1·43 and k ·000149. So that for these two channels

$$i = \frac{\cdot 000149 v^{1\cdot 95}}{m^{1\cdot 43}}.$$

The calculated and observed velocities are shown in Table XXXI and agree remarkably well.

Very smooth channels. The ratio $\frac{n}{p}$ for the four very smooth channels, shown in Fig. 116, varies between 1·36 and 1·45, the average value being about 1·4. On plotting $\log y$ and $\log i$ the points did not appear to lie about any particular line, so that p could not be determined, and indicates that k is different for the four channels. Trial values of $n = 1\cdot 75$ and $p = 1\cdot 25$ were taken, or

$$i = \frac{k \,.\, v^{1\cdot 75}}{m^{1\cdot 25}},$$

and values of k calculated for each channel.

Velocities as determined experimentally and as calculated for three of the channels are shown in Table XXIV from which it will be seen that k varies from ·00006516 for the channel lined with pure cement, to ·0001072 for the rectangular shaped section lined with carefully planed boards.

It will be seen, that although the range of velocities is considerable, there is a remarkable agreement between the calculated and observed values of v, so that for very smooth channels the values of n and p taken, can be used with considerable confidence.

Channels moderately smooth. The plottings of $\log m$ and $\log v$ for channels lined with brick, concrete, and brick washed with cement are shown in Fig. 116, Nos. 9 to 13.

It will be seen that the value of $\frac{n}{p}$ is not so constant as for the two classes previously considered, but the mean value is about 1·635, which is exactly the value of $\frac{n}{p}$ for the Sudbury aqueduct. For the New Croton aqueduct $\frac{n}{p}$ is as high as 1·74, and, as shown in Fig. 114, this aqueduct is a little rougher than the Sudbury.

The variable values of $\frac{n}{p}$ show that for any two of these channels either n, or p, or both, are different. On plotting $\log i$ and $\log v$ as was done in Fig. 115, the points, as in the last case, could not be said to lie about any particular straight line, and the value of p is therefore uncertain. It was assumed to be 1·15, and therefore, taking $\frac{n}{p}$ as 1·635, n is 1·88.

Since no two channels have the same value for $\frac{n}{p}$, it is to be expected that the coefficient k will not be constant.

In the Tables XXV to XXIX the values of v as observed and as calculated from the formula

$$i = \frac{kv^{1\cdot 88}}{m^{1\cdot 15}}$$

and also the value of k are given.

It will be seen that k varies very considerably, but, for the three large aqueducts which were built with care, it is fairly constant.

The effect of the sides of the channel becoming dirty with time, is very well seen in the case of the circular and basket-shaped sewers. In the one case the value of k, during four years' service, varied from ·00006124 to ·00007998 and in the other from ·00008405 to ·0001096. It is further of interest to note, that when

m and v are both unity and k is equal to ·000067, the value of i is the same as given by Bazin's formula, when γ is ·29, and when k is ·0001096, as in the case of the dirty basket-shaped sewer, the value of γ is ·642, which agrees with that shown for this sewer on Fig. 114.

Channels in masonry. Hammered ashlar and rubble. Attention has already been called, page 198, to the results given in Table XXXI for the two channels lined with hammered ashlar.

The values of n and p for these two channels were determined directly from the logarithmic plottings, but the data is insufficient to give definite values, in general, to n, p, and k.

In addition to these two channels, the results for one of Bazin's channels lined with small pebbles, and for other channels lined with rubble masonry and large pebbles are given. The ratio $\frac{n}{p}$ is quoted at the head of the tables where possible. In the other cases n and p were determined by trial.

The value of n, for these rough channels, approximates to 2, and appears to have a mean value of about 1·96, while p varies from 1·36 to 1·5.

Earthen channels. A very large number of experiments have been made on the flow in canals and rivers, but as it is generally impracticable to keep either i or m constant, the ratio $\frac{n}{p}$ can only be determined in a very few cases, and in these, as will be seen from the plottings in Fig. 116, the results are not satisfactory, and appear to be unreliable, as $\frac{n}{p}$ varies between ·94 and 2·18. It seems probable that p is between 1 and 1·5 and n from 1·96 to 2·15.

Logarithmic formulae for various classes of channels.

Very smooth channels, lined with cement, or planed boards,

$$i = (\cdot 000065 \text{ to } \cdot 00011)\frac{v^{1\cdot 75}}{m^{1\cdot 25}}.$$

Smooth channels, lined with brick well pointed, or concrete,

$$i = \cdot 000065 \text{ to } \cdot 00011\frac{v^{1\cdot 88}}{m^{1\cdot 15}}.$$

Channels lined with ashlar masonry, or small pebbles,

$$i = \cdot 00015\frac{v^{1\cdot 96}}{m^{1\cdot 4}}.$$

Channels lined with rubble masonry, large pebbles, rock, and exceptionally smooth earth channels free from deposits,

$$i = \cdot 00023\frac{v^{1\cdot 96}}{m^{1\cdot 3 \text{ to } 1\cdot 5}}.$$

Earth channels,

$$i = \frac{kv^{2\cdot1}}{m^{1\cdot3 \text{ to } 1\cdot5}}.$$

k varies from ·00033 to ·00050 for channels in ordinary condition and from ·00050 to ·00085 for channels of exceptional resistance.

129. Approximate formula for the flow in earth channels.

The author has by trial found n and p for a number of channels, and except for very rough channels, n is not very different from 2, and p is nearly 1·5. The approximate formula

$$v = C\sqrt{m^{\frac{3}{2}}\, i},$$

may, therefore, be taken for earth channels, in which C is about 50 for channels in ordinary condition.

In Table XXXIII are shown values of v as observed and calculated from this formula.

The hydraulic mean depth varies from ·958 to 17·7 and for all values between these external limits, the calculated velocities agree with the observed, within 10 per cent., whereas the variation of C in the ordinary Chezy formula is from 40 to 103, and according to Bazin's formula, C would vary from about 60 to 115. With this formula velocities can be readily calculated with the ordinary slide rule.

TABLE XXIV.

Very smooth channels.

Planed wood, rectangular, 1·575 feet wide.

$$i = \cdot0001072\frac{v^{1\cdot75}}{m^{1\cdot5}},$$

$$\log k = \bar{4}\cdot0300.$$

m feet	v ft. per sec. observed	v ft. per sec. calculated
·2372	3·55	3·57
·2811	4·00	4·03
·3044	4·20	4·26
·3468	4·67	4·68
·3717	4·94	4·94
·3930	5·11	5·12
·4124	5·26	5·30
·4311	5·49	5·47

TABLE XXIV (*continued*).

Pure cement, semicircular.

$$i = \frac{kv^{1\cdot75}}{m^{1\cdot25}},$$

$$\cdot00006516\,\frac{v^{1\cdot75}}{m^{1\cdot25}},$$

$$\log k = \bar{5}\cdot8141.$$

m	v observed	v calculated
·503	3·72	3·66
·682	4·59	4·55
·750	4·87	4·87
·915	5·57	5·62
1·034	6·14	6·14

Cement and very fine sand, semicircular.

$$i = \cdot0000759\,\frac{v^{1\cdot75}}{m^{1\cdot25}},$$

$$\log k = \bar{5}\cdot8802.$$

m feet	v ft. per sec. observed	v ft. per sec. calculated
·379	2·87	2·74
·529	3·44	3·49
·636	3·87	3·98
·706	4·30	4·30
·787	4·51	4·59
·839	4·80	4·84
·900	4·94	5·10
·941	5·20	5·26
·983	5·38	5·43
1·006	5·48	5·53
1·02	5·55	5·58
1·04	5·66	5·66

TABLE XXV.

Boston circular sewer, 9 ft. diameter.
Brick, washed with cement, $i = \frac{1}{3000}$ (Horton).

$$i = \cdot00006124\,\frac{v^{1\cdot83}}{m^{1\cdot15}},$$

$$\log v = \cdot6118 \log m + \cdot5319 \log i + 2\cdot2401.$$

m feet	v ft. per sec. observed	v ft. per sec. calculated
·928	2·21	2·34
1·208	2·70	2·76
1·408	3·03	3·03
1·830	3·48	3·56
1·999	3·73	3·75
2·309	4·18	4·10

TABLE XXV (*continued*).

The same sewer after 4 years' service.

$$i = \cdot 00007998 \frac{v^{1\cdot 88}}{m^{1\cdot 15}},$$

$$\log v = \cdot 6118 \log m + \cdot 5319 \log i + 2\cdot 1795.$$

m	v observed	v calculated
1·120	2·38	2·29
1·606	2·82	2·78
1·952	3·16	3·22
2·130	3·30	3·39

TABLE XXVI.

New Croton aqueduct. Lined with brick.

$$i = \cdot 000073 \frac{v^{1\cdot 88}}{m^{1\cdot 15}},$$

$$\log v = \cdot 6118 \log m + \cdot 5319 \log i + 2\cdot 200.$$

m feet	v ft. per sec. observed	v ft. per sec. calculated
1·000	1·37	1·37
1·250	1·59	1·57
1·499	1·79	1·76
1·748	1·95	1·93
2·001	2·11	2·10
2·250	2·27	2·26
2·500	2·41	2·40
2·749	2·52	2·55
2·998	2·65	2·68
3·251	2·78	2·82
3·508	2·89	2·96
3·750	3·00	3·08
3·838	3·02	3·12

TABLE XXVII.

Sudbury aqueduct. Lined with well pointed brick.

$$i = \cdot 00006427 \frac{v^{1\cdot 88}}{m^{1\cdot 15}},$$

$$\log v = \cdot 6118 \log m + \cdot 5319 \log i + 2\cdot 23.$$

m feet	v ft. per sec. observed	v ft. per sec. calculated
·4987	1·135	1·142
·6004	1·269	1·279
·8005	1·515	1·525
1·000	1·755	1·752
1·200	1·948	1·954
1·400	2·149	2·147
1·601	2·332	2·331
1·801	2·513	2·511
2·001	2·651	2·672
2·201	2·844	2·832
2·336	2·929	2·937

TABLE XXVIII.

Rectangular channel lined with brick (Bazin).

$$i = \cdot 000107 \frac{v^{1\cdot 88}}{m^{1\cdot 15}}.$$

m feet	v ft. per sec. observed	v ft. per sec. calculated
·1922	2·75	2·90
·2838	3·67	3·68
·3654	4·18	4·30
·4235	4·72	4·71
·4812	5·10	5·09
·540	5·34	5·46
·5823	5·68	5·77
·6197	6·01	5·94
·6682	6·15	6·22
·6968	6·47	6·39
·7388	6·60	6·62
·7788	6·72	6·83

Glasgow aqueduct. Lined with concrete.

$$i = \cdot 0000696 \frac{v^{1\cdot 88}}{m^{1\cdot 15}},$$

$$\log v = \cdot 6118 \log m + \cdot 5319 \log i + 2\cdot 2113.$$

m feet	v ft. per sec. observed	v ft. per sec. calculated
1·227	1·87	1·89
1·473	2·07	2·11
1·473	2·106	2·11
1·489	2·214	2·13
1·499	2·13	2·14
1·499	2·15	2·14
1·548	2·18	2·22
1·597	2·21	2·23
1·607	2·23	2·23
1·610	2·22	2·24
1·620	2·24	2·24
1·627	2·25	2·27
1·738	2·26	2·33
1·811	2·47	2·40

TABLE XXIX.

Charlestown basket-shaped sewer 6′ × 6′ 8″.
Brick, washed with cement, $i = \frac{1}{2000}$ (Horton).

$$i = \cdot 00008405 \frac{v^{1\cdot 88}}{m^{1\cdot 15}}, \quad \text{or} \quad v = 147 i^{\cdot 5319} m^{\cdot 6118},$$

$$\log v = \cdot 6118 \log m + \cdot 5319 \log i + 2\cdot 1678.$$

m feet	v ft. per sec. observed	v ft. per sec. calculated
·688	1·99	2·05
·958	2·46	2·52
1·187	2·82	2·87
1·539	3·44	3·36

TABLE XXIX (*continued*).

The same sewer after 4 years' service,

$$i = \cdot 0001096 \frac{v^{1\cdot 88}}{m^{1\cdot 15}},$$

$$\log v = \cdot 6118 \log m + \cdot 5319 \log i + 2\cdot 1065.$$

m feet	v ft. per sec observed	v ft. per sec. calculated
1·342	2·66	2·68
1·508	2·86	2·88
1·645	3·04	3·04

TABLE XXX.

Left aqueduct of the Solani canal, rectangular in section, lined with rubble masonry (Cunningham),

$$i = \cdot 00026 \frac{v^{1\cdot 96}}{m^{1\cdot 4}}.$$

i	m feet	v ft. per sec. observed	v ft. per sec. calculated
·000225	6·43	3·46	3·50
·000206	6·81	3·49	3·47
·000222	7·21	3·70	3·84
·000207	7·643	3·87	3·83
·000189 ?	7·94	4·06	3·83

Right aqueduct,

$$i = \cdot 0002213 \frac{v^{1\cdot 96}}{m^{1\cdot 4}}.$$

i	m	v observed	v calculated
·000195	3·42	2·43	2·26
·000225	5·86	3·61	3·58
·000205	6·76	3·73	3·76
·000193	7·43	3·87	3·89
·000193	7·77	3·93	4·04
·000190	7·96	4·06	4·06

Torlonia tunnel, partly in hammered ashlar, partly in solid rock,

$$i = \cdot 00104,$$

$$i = \cdot 00022 \frac{v^{1\cdot 95}}{m^{1\cdot 31}}.$$

m	v observed	v calculated
1·932	3·382	3·45
2·172	3·625	3·73
2·552	4·232	4·16
2·696	4·324	4·32
3·251	5·046	4·90
3·438	4·965	5·08
3·531	4·908	5·18
3·718	5·358	5·37

TABLE XXXI.

Rectangular channel lined with hammered ashlar,

$$\frac{n}{p} = 1{\cdot}36,$$

$$i = {\cdot}000149 \frac{v^{1{\cdot}95}}{m^{1{\cdot}43}},$$

$$\log k = \bar{4}{\cdot}1740.$$

$i = {\cdot}101$			$i = {\cdot}037$		
m feet	v ft. per sec. observed	v ft. per sec. calculated	m feet	v ft. per sec. observed	v ft. per sec. calculated
·324	12·30	12·30	·424	9·04	9·02
·467	16·18	16·18	·620	11·46	11·86
·580	18·68	18·97	·745	13·55	13·52
·562	21·09	20·8	·852	15·08	14·98

Rectangular channel lined with small pebbles, $i = {\cdot}0049$, ($n = 1{\cdot}96$, $p = 1{\cdot}32$ will give equally good results).

$$\frac{n}{p} = 1{\cdot}49,$$

$$i = {\cdot}000152 \frac{v^{1{\cdot}95}}{m^{1{\cdot}31}},$$

$$\log k = \bar{4}{\cdot}1913.$$

m feet	v ft. per sec. observed	v ft. per sec. calculated
·250	2·16	2·34
·357	2·95	2·97
·450	3·40	3·47
·520	3·84	3·82
·588	4·14	4·15
·644	4·43	4·43
·700	4·64	4·66
·746	4·88	4·88
·785	5·12	5·05
·832	5·26	5·25
·871	5·43	5·43
·910	5·57	5·58

TABLE XXXII.

Channel lined with large pebbles (Bazin),

$$i = \cdot 000229 \frac{v^{1\cdot 96}}{m^{1\cdot 5}},$$

$$\log k = \bar{4}\cdot 3605.$$

m feet	v ft. per sec. observed	v ft. per sec. calculated
·291	1·79	1·84
·417	2·43	2·44
·510	2·90	2·90
·587	3·27	3·18
·656	3·56	3·45
·712	3·85	3·67
·772	4·03	3·91
·823	4·23	4·33
·867	4·43	4·53
·909	4·60	4·69
·946	4·78	4·84
·987	4·90	5·00

TABLE XXXIII.

Velocities as observed, and as calculated by the formula

$$v = C\sqrt{m^{\frac{3}{2}} i}. \quad C = 50.$$

Ganges Canal.

i	m feet	v ft. per sec. observed	v ft. per sec. calculated
·000155	5·40	2·4	2·34
·000229	8·69	3·71	3·80
·000174	7·82	2·96	3·08
000227	9·34	4·02	4·00
·000291	4·50	2·82	2·63

River Weser.

i	m	v observed	v calculated
·0005503	8·93	6·29	6·0
·0005503	13·35	7·90	8·18
·0002494	14·1	5·69	5·70
·0002494	10·5	4·75	4·78

Missouri.

i	m	v observed	v calculated
·0001183	10·7	3·6	3·23
·0001782	12·3	4·38	4·37
·0001714	15·4	5·03	4·80
·0002130	17·7	6·19	6·26

Cavour Canal.

i	m	v observed	v calculated
·00029	7·32	3·70	3·80
·00029	5·15	3·10	2·92
·00033	5·63	3·40	3·14
·00033	4·74	3·04	2·91

Earth channel (branch of Burgoyne canal).
Some stones and a few herbs upon the surface.

C = 48.

i	m feet	v ft. per sec. observed	v ft. per sec. calculated
·000957	·958	1·243	1·30
·000929	1·181	1·702	1·66
·000993	1·405	1·797	1·94
·000986	1·538	1·958	2·06
·000792	·958	1·233	1·25
·000808	1·210	1·666	1·56
·000858	1·436	1·814	1·79
·000842	1·558	1·998	2·08

130. Distribution of the velocity in the cross section of open channels.

The mean velocity of flow in channels and pipes of small cross sectional area can be determined by actually measuring the weight or the volume of the water discharged, as shown in Chapter VII, and dividing the volume discharged per second by the cross section of the pipe. For large channels this is impossible, and the mean velocity has to be determined by other means, usually by observing the velocity at a large number of points in the same transverse section by means of floats, current meters*, or Pitot tubes†. If the bed of the stream is carefully sounded, the cross section can be plotted and divided into small areas, at the centres of which the velocities have been observed. If then, the observed velocity be assumed equal to the mean velocity over the small area, the discharge is found by adding the products of the areas and velocities.

Or $$Q = \Sigma a \,.\, v.$$

M. Bazin‡, with a thoroughness that has characterised his experiments in other branches of hydraulics, has investigated the distribution of velocities in experimental channels and also in natural streams.

In Figs. 119 and 120 respectively are shown the cross sections of an open and closed rectangular channel with curves of equal

* See page 238. † See page 241.
‡ Bazin, *Recherches Hydraulique.*

velocity drawn on the section. Curves showing the distribution of velocities at different depths on vertical and horizontal sections are also shown.

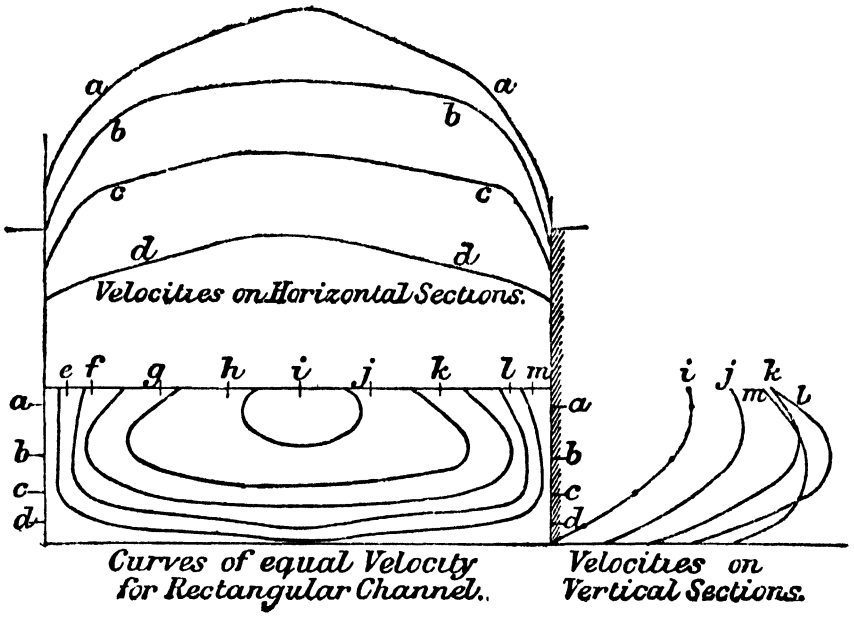

Fig. 119.

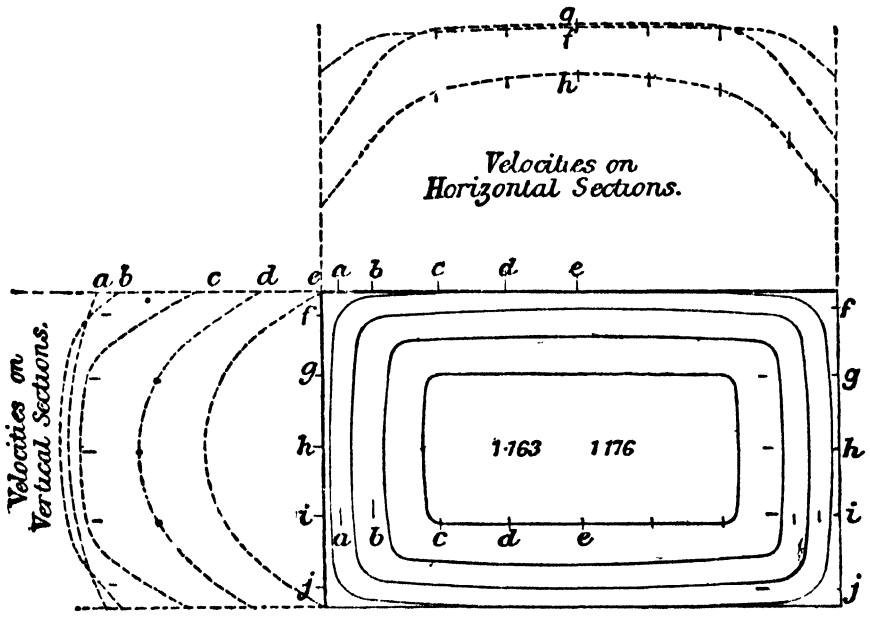

Fig. 120.

It will be seen that the maximum velocity does not occur in the free surface of the water, but on the central vertical section at some distance from the surface, and that the surface velocity may be very different from the mean velocity. As the maximum velocity does not occur at the surface, it would appear that in

assuming the wetted perimeter to be only the wetted surface of the channel, some error is introduced. That the air has not the same influence as if the water were in contact with a surface similar to that of the sides of the channel, is very clearly shown by comparing the curves of equal velocity for the closed rectangular channel as shown in Fig. 119 with those of Fig. 120. The air resistance, no doubt, accounts in some measure for the surface velocity not being the maximum velocity, but that it does not wholly account for it is shown by the fact that, whether the wind is blowing up or down stream, the maximum velocity is still below the surface. M. Flamant* suggests as the principal reason why the maximum velocity does not occur at the surface, that the water is less constrained at the surface, and that irregular movements of all kinds are set up, and energy is therefore utilised in giving motions to the water not in the direction of translation.

Depth on any vertical at which the velocity is equal to the mean velocity. Later is discussed, in detail, the distribution of velocity on the verticals of any cross section, and it will be seen, that if u is the mean velocity on any vertical section of the channel, the depth at which the velocity is equal to the mean velocity is about 0·6 of the total depth. This depth varies with the roughness of the stream, and is deeper the greater the ratio of the depth to the width of the stream. It varies between ·5 and ·55 of the depth for rivers of small depth, having beds of fine sand, and from ·55 to ·66 in large rivers from 1 to $3\frac{1}{4}$ feet deep and having strong beds†.

As the banks of the stream are approached, the point at which the mean velocity occurs falls nearer still to the bed of the stream, but if it falls very low there is generally a second point near the surface at which the velocity is also equal to the mean velocity.

When the river is covered with ice the maximum velocity of the current is at a depth of ·35 to ·45 of the total depth, and the mean velocity at two points at depths of ·08 to ·13 and ·68 to ·74 of the total depth‡.

If, therefore, on various verticals of the cross section of a stream the velocity is determined, by means of a current meter, or Pitot tube, at a depth of about ·6 of the total depth from the surface, the velocity obtained may be taken as the mean velocity upon the vertical.

* *Hydraulique.*

† *Le Génie Civil*, April, 1906, "Analysis of a communication by Murphy to the Hydrological section of the Institute of Geology of the United States."

‡ Cunningham, *Experiments on the Ganges Canal.*

The total discharge can then be found, approximately, by dividing the cross section into a number of rectangles, such as *abcd*, Fig. 120*a*, and multiplying the area of the rectangle by the velocity measured on the median line at 0·6 of its depth.

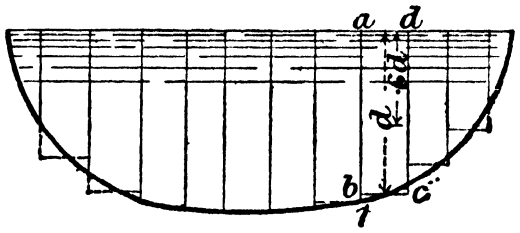

Fig. 120*a*.

The flow of the Upper Nile has recently been determined in this way.

Captain Cunningham has given several formulae, for the mean velocity u upon a vertical section, of which two are here quoted.

$$u = \tfrac{1}{4}(V + 3v_{\frac{3}{5}}) \quad \ldots\ldots\ldots\ldots (1),$$

$$u = \tfrac{1}{3}(2v_{\frac{1}{4}} - v_{\frac{1}{2}} + 2v_{\frac{3}{4}}) \quad \ldots\ldots\ldots\ldots (2),$$

V being the velocity at the surface, $v_{\frac{3}{5}}$ the velocity at $\frac{3}{5}$ of the depth, $v_{\frac{1}{4}}$ at one quarter of the depth, and so on.

131. Form of the curve of velocities on a vertical section.

M. Bazin* and Cunningham have both taken the curve of velocities upon a vertical section as a parabola, the maximum velocity being at some distance h_m below the free surface of the water.

Let V be the velocity measured at the centre of a current and as near the surface as possible. This point will really be at 1 inch or more below the surface, but it is supposed to be at the surface.

Let v be the velocity on the same vertical section at any depth h, and H the depth of the stream.

Bazin found that, if the stream is wide compared to its depth, the relationship between v, V, h, and i the slope, is expressed by the formula,

$$\frac{V - v}{\sqrt{Hi}} = k\left(\frac{h}{H}\right)^2,$$

or

$$v = V - k\left(\frac{h}{H}\right)^2\sqrt{Hi} \quad \ldots\ldots\ldots\ldots (1),$$

k being a numerical coefficient, which has a nearly constant value of 36·2 when the unit of length is one foot.

* *Recherches Hydraulique*, p. 228; *Annales des Ponts et Chaussées*, 2nd Vol., 1875.

To determine the depth on any vertical at which the velocity is equal to the mean velocity. Let u be the mean velocity on any vertical section, and h_u the depth at which the velocity is equal to the mean velocity.

The discharge through a vertical strip of width ∂l is

$$uH\partial l = \partial l \int_0^H v \,.\, dh.$$

Therefore $$uH = \int_0^H \left(V - \frac{kh^2}{H^2}\sqrt{Hi}\right) dh,$$

and $$u = V - \frac{k}{3}\sqrt{Hi} \quad \text{.....(2).}$$

Substituting u and h_u in (1) and equating to (2),

$$\left(\frac{h_u}{H}\right)^2 = \frac{1}{3},$$

and $$h_u = \cdot 577H.$$

This depth, at which the velocity is equal to the mean velocity, is determined on the assumption that k is constant, which is only true for sections very near to the centre of streams which are wide compared with their depth.

It will be seen from the curves of Fig. 120 that the depth at which the maximum velocity occurs becomes greater as the sides of the channel are approached, and the law of variation of velocity also becomes more complicated. M. Bazin also found that the depth at the centre of the stream, at which the maximum velocity occurs, depends upon the ratio of the width to the depth, the reason apparently being that, in a stream which is wide compared to its depth, the flow at the centre is but slightly affected by the resistance of the sides, but if the depth is large compared with the width, the effect of the sides is felt even at the centre of the stream. The farther the vertical section considered is removed from the centre, the effect of the resistance of the sides is increased, and the distribution of velocity is influenced to a greater degree. This effect of the sides, Bazin expressed by making the coefficient k to vary with the depth h_m at which the maximum velocity occurs.

The coefficient is then,

$$k = \frac{36\cdot 2}{\left(1 - \frac{h_m}{H}\right)^2}.$$

Further, the equation to the parabola can be written in terms of v_m, the maximum velocity, instead of V.

Thus,
$$v = v_m - \frac{36{\cdot}2\sqrt{\mathrm{H}i}\,(h-h_m)^2}{\mathrm{H}^2\left(1-\frac{h_m}{\mathrm{H}}\right)^2} \quad\ldots\ldots\ldots\ldots\ldots\ldots(3).$$

The mean velocity u, upon the vertical section, is then,
$$u = \frac{1}{\mathrm{H}}\int_0^{\mathrm{H}} v\,dh$$
$$= v_m - \frac{36{\cdot}2\sqrt{\mathrm{H}i}}{\left(1-\frac{h_m}{\mathrm{H}}\right)^2}\left(\frac{1}{3}-\frac{h_m}{\mathrm{H}}+\frac{h_m^2}{\mathrm{H}^2}\right) \quad\ldots\ldots\ldots\ldots\ldots(4).$$

Therefore
$$v = u + \frac{36{\cdot}2\sqrt{\mathrm{H}i}}{\left(1-\frac{h_m}{\mathrm{H}}\right)^2}\left(\frac{1}{3}-\frac{h_m}{\mathrm{H}}+\frac{h_m^2}{\mathrm{H}^2}\right) - \frac{36{\cdot}2\sqrt{\mathrm{H}i}}{\mathrm{H}^2\left(1-\frac{h_m}{\mathrm{H}}\right)^2}(h-h_m)^2.$$

When
$$v = u, \quad h = h_u,$$
and therefore,
$$\frac{1}{3}-\frac{h_m}{\mathrm{H}} = \frac{h_u^2}{\mathrm{H}^2} - \frac{2h_u h_m}{\mathrm{H}^2}.$$

The depth h_m at which the velocity is a maximum is generally less than ·2H, except very near the sides, and h_u is, therefore, not very different from ·6H, as stated above.

Ratio of maximum velocity to the mean velocity. From equation (4),
$$v_m = u + \frac{36{\cdot}2\sqrt{\mathrm{H}i}}{\left(1-\frac{h_m}{\mathrm{H}}\right)^2}\left(\frac{1}{3}-\frac{h_m}{\mathrm{H}}+\frac{h_m^2}{\mathrm{H}^2}\right).$$

In a wide stream in which the depth of a cross section is fairly constant the hydraulic mean depth m does not differ very much from H, and since the mean velocity of flow through the section is $\mathrm{C}\sqrt{mi}$ and is approximately equal to u, therefore,
$$\frac{v_m}{u} = 1 + \frac{36{\cdot}2}{\mathrm{C}\left(1-\frac{h_m}{\mathrm{H}}\right)^2}\left(\frac{1}{3}-\frac{h_m}{\mathrm{H}}+\frac{h_m^2}{\mathrm{H}^2}\right).$$

Assuming h_m to vary from 0 to ·2H and C to be 100, $\frac{v_m}{u}$ varies from 1·12 to 1·09. The ratio of maximum velocity to mean velocity is, therefore, probably not very different from 1·1.

132. The slopes of channels and the velocities allowed in them.

The discharge of a channel being the product of the area and the velocity, a given discharge can be obtained by making the area small and the velocity great, or *vice versâ*. And since the velocity is equal to $\mathrm{C}\sqrt{mi}$, a given velocity can be obtained by

varying either m or i. Since m will in general increase with the area, the area will be a minimum when i is as large as possible. But, as the cost of a channel, including land, excavation and construction, will, in many cases, be almost proportional to its cross sectional area, for the first cost to be small it is desirable that i should be large. It should be noted, however, that the discharge is generally increased in a greater proportion, by an increase in A, than for the same proportional increase in i.

Assume, for instance, the channel to be semicircular.

The area is proportional to d^2, and the velocity v to $\sqrt{d.i}$.

Therefore $Q \propto d^2 \sqrt{di}$.

If d is kept constant and i doubled, the discharge is increased to $\sqrt{2Q}$, but if d is doubled, i being kept constant, the discharge will be increased to 5·6Q. The maximum slope that can be given will in many cases be determined by the difference in level of the two points connected by the channel.

When water is to be conveyed long distances, it is often necessary to have several pumping stations *en route*, as sufficient fall cannot be obtained to admit of the aqueduct or pipe line being laid in one continuous length.

The mean velocity in large aqueducts is about 3 feet per second, while the slopes vary from 1 in 2000 to 1 in 10,000. The slope may be as high as 1 in 1000, but should not, only in exceptional circumstances, be less than 1 in 10,000.

In Table XXXIV are given the slopes and the maximum velocities in them, of a number of brick and masonry lined aqueducts and earthen channels, from which it will be seen that the maximum velocities are between 2 and 5½ feet per second, and the slopes vary from 1 in 2000 to 1 in 7700 for the brick and masonry lined aqueducts, and from 1 in 300 to 1 in 20,000 for the earth channels. The slopes of large natural streams are in some cases even less than 1 in 100,000. If the velocity is too small suspended matter is deposited and slimy growths adhere to the sides.

It is desirable that the smallest velocity in the channel shall be such, that the channel is "self-cleansing," and as far as possible the growth of low forms of plant life prevented.

In sewers, or channels conveying unfiltered waters, it is especially desirable that the velocity shall not be too small, and should, if possible, not be less than 2 ft. per second.

TABLE XXXIV.

Showing the slopes of, and maximum velocities, as determined experimentally, in some existing channels.

Smooth aqueducts.

	Slope	Maximum velocity
New Croton aqueduct	·0001326	3 ft. per second
Sudbury aqueduct	·000189	2·94 " "
Glasgow aqueduct	·000182	2·25 " "
Paris Dhuis	·000130	
Avre, 1st part	·0004	
" 2nd part	·00033	
Manchester Thirlmere	·000315	
Naples	·00050	4·08 " "
Boston Sewer	·0005	3·44 " "
" "	·000333	4·18 " "

Earth channels.

	Slope	Maximum velocity	Lining
Ganges canal	·000306	4·16 ft. per second	earth
Escher "	·003	4·08 " "	"
Linth "	·00037	5·53 " "	gravel and
Cavour "	·00033	3·42 " "	some stones
Simmen "	·0070	3·74 " "	earth
Chazilly cut	·00085	1·70 " "	earth, stony,
Marseilles canal	·00043	1·70 " "	few weeds
Chicago drainage canal (of the bottom of the canal)	·00005	3 " "	" "

TABLE XXXV.

Showing for varying values of the hydraulic mean depth m, the minimum slopes, which brick channels and glazed earthenware pipes should have, that the velocity may not be less than 2 ft. per second.

m feet	slope	m feet	slope
·1	1 in 93	1·25	1 in 3700
·2	1 " 275	1·5	1 " 4700
·3	1 " 510	1·75	1 " 5710
·4	1 " 775	2·0	1 " 6675
·5	1 " 1058	2·5	1 " 9000
·6	1 " 1380	3·0	1 " 11200
·8	1 " 2040	4·0	1 " 15850
1·0	1 " 2760		

The slopes are calculated from the formula

$$v = \frac{157{\cdot}5}{1 + \frac{{\cdot}5}{\sqrt{m}}}\sqrt{mi}.$$

The value of γ is taken as 0·5 to allow for the channel becoming dirty. For the minimum slope for any other velocity v, multiply the number here given by $\left(\frac{2}{v}\right)^2$. For example, the minimum slope for a velocity of 3 feet per second when m is 1, is 1 in 1227.

Velocity of flow in, and slope of earth channels. If the velocity is high in earth channels, the sides and bed of the channel are eroded, while on the other hand if it is too small, the capacity of the channel will be rapidly diminished by the deposition of sand and other suspended matter, and the growth of aquatic plants. Du Buat gives ·5 foot per second as the minimum velocity that mud shall not be deposited, while Belgrand allows a minimum of ·8 foot per second.

TABLE XXXVI.

Showing the velocities above which, according to Du Buat, and as quoted by Rankine, erosion of channels of various materials takes place.

Soft clay	0·25 ft.	per	second	
Fine sand	0·50	"	"	
Coarse sand and gravel as large as peas	0·70	"	"	
Gravel 1 inch diameter	2·25	"	"	
Pebbles 1½ inches diameter	3·33	"	"	
Heavy shingle	4·00	"	"	
Soft rock, brick, earthenware	4·50	"	"	
Rock, various kinds	6·00	"	"	and upwards

133. Sections of aqueducts and sewers.

The forms of sections given to some aqueducts and sewers are shown in Figs. 121 to 131. In designing such aqueducts and sewers, consideration has to be given to problems other than the comparatively simple one of determining the size and slope to be given to the channel to convey a certain quantity of water. The nature of the strata through which the aqueduct is to be cut, and whether the excavation can best be accomplished by tunnelling, or by cut and cover, and also, whether the aqueduct is to be lined, or cut in solid rock, must be considered. In many cases it is desirable that the aqueduct or sewer should have such a form that a man can conveniently walk along it, although its sectional area is not required to be exceptionally large. In such cases the section of the channel is made deep and narrow. For sewers, the oval section, Figs. 126 and 127, is largely adopted because of the facilities it gives in this respect, and it has the further advantage that, as the flow diminishes, the cross section also diminishes, and the velocity remains nearly constant for all, except very small, discharges. This is important, as at small velocities sediment tends to collect at the bottom of the sewer.

134. Siphons forming part of aqueducts.

It is frequently necessary for some part of an aqueduct to be constructed as a siphon, as when a valley has to be crossed or the

aqueduct taken under a stream or other obstruction, and the aqueduct must, therefore, be made capable of resisting considerable pressure. As an example the New Croton aqueduct from Croton Lake to Jerome Park reservoir, which is 33·1 miles

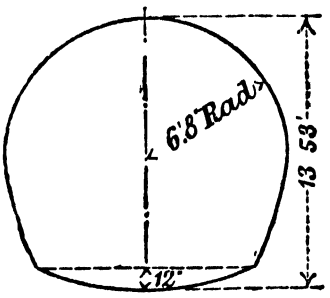

Fig. 121.

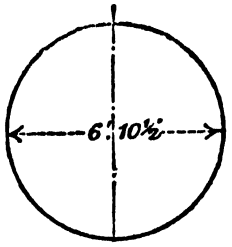

Fig. 122.

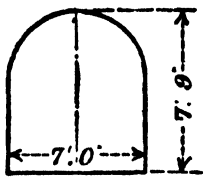

Fig. 123.

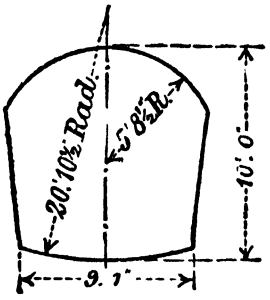

Fig. 124.

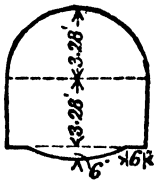

Fig. 125.

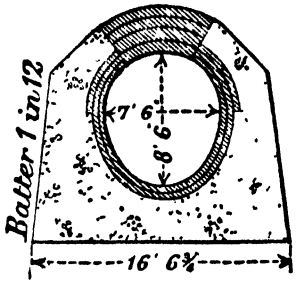

Fig. 126.

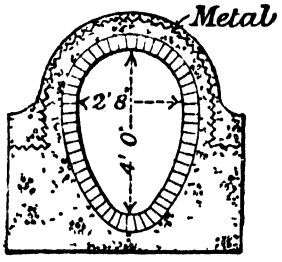

Fig. 127.

Fig. 128.

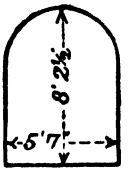

Fig. 129.

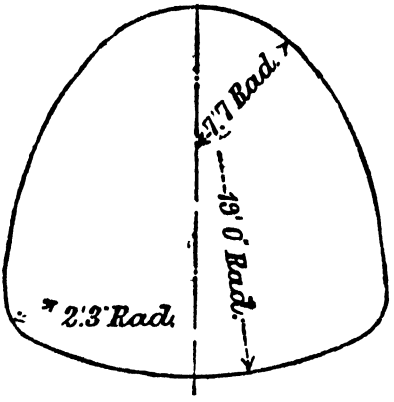

Fig. 130.

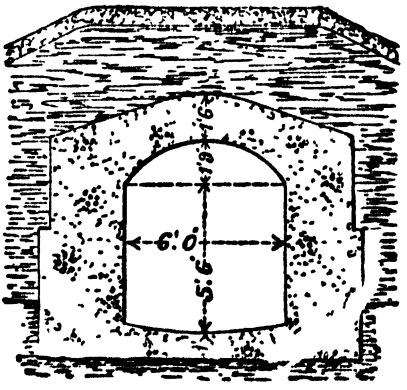

Fig. 131.

long, is made up of two parts. The first is a masonry conduit of the section shown in Fig. 121, 23·9 miles long and having a slope of ·0001326, the second consists almost entirely of a brick lined siphon 6·83 miles long, 12′ 3″ diameter, the maximum head in which is 126 feet, and the difference in level of the two ends is 6·19 feet. In such cases, however, the siphon is frequently made of steel, or cast-iron pipes, as in the case of the new Edinburgh aqueduct (see Fig. 131) which, where it crosses the valleys, is made of cast-iron pipes 33 inches diameter.

135. The best form of channel.

The best form of channel, or channel of least resistance, is that which, for a given slope and area, will give the maximum discharge.

Since the mean velocity in a channel of given slope is proportional to $\sqrt{\frac{A}{P}}$, and the discharge is $A \cdot v$, the best form of channel for a given area, is that for which P is a minimum.

The form of the channel which has the minimum wetted perimeter for a given area is a semicircle, for which, if r is the radius, the hydraulic mean depth is $\frac{r}{2}$.

More convenient forms, for channels to be excavated in rock or earth, are those of the rectangular or trapezoidal section, Fig. 133. For a given discharge, the best forms for these channels, will be those for which both A and P are a minimum; that is, when the differentials ∂A and ∂P are respectively equal to zero.

Rectangular channel. Let L be the width and h the depth, Fig. 132, of a rectangular channel; it is required to find the ratio $\frac{L}{h}$ that the area A and the wetted perimeter P may both be a minimum, for a given discharge.

$$A = Lh,$$

therefore $$\partial A = h \cdot \partial L + L\partial h = 0 \quad \ldots\ldots\ldots\ldots\ldots\ldots (1),$$

$$P = L + 2h,$$

therefore $$\partial P = \partial L + 2\partial h = 0 \quad \ldots\ldots\ldots\ldots\ldots\ldots (2).$$

Substituting the value of ∂L from (2) in (1),

$$L = 2h.$$

Therefore $$m = \frac{2h^2}{4h} = \frac{h}{2}.$$

Since $L = 2h$, the sides and bottom of the channel touch a circle having h as radius and the centre of which is in the free surface of the water.

Earth channels of trapezoidal form. In Fig. 133 let

l be the bottom width,
h the depth,
A the cross sectional area FBCD,
P the length of FBCD or the wetted perimeter,
i the slope,

and let the slopes of the sides be t horizontal to one vertical; CG is then equal to th and tan CDG $= t$.

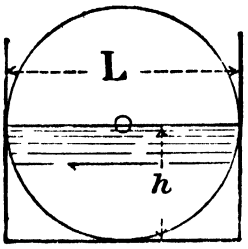

Fig. 132.

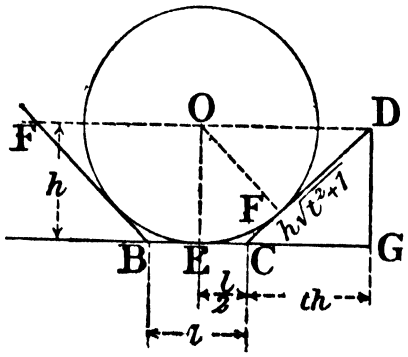

Fig. 133.

Let Q be the discharge in cubic feet per second.

Then $$A = hl + th^2 \quad\text{.....(3)},$$

$$P = l + 2h\sqrt{t^2+1} \quad\text{.....(4)},$$

and $$m = \frac{h\,(l + th)}{l + 2h\sqrt{t^2+1}} \quad\text{.....(5)}.$$

For the channel to be of the best form dP and dA both equal zero.

From (3) $$A = hl + th^2,$$

and therefore $$dA = hdl + ldh + 2thdh = 0 \quad\text{.....(6)}.$$

From (4) $$P = l + 2h\sqrt{t^2+1}$$

and $$dP = dl + 2\sqrt{t^2+1}\,dh = 0 \quad\text{.....(7)}.$$

Substituting the value of dl from (7) in (6)

$$l = 2h\sqrt{t^2+1} - 2th \quad\text{.....(8)}.$$

Therefore, $$m = \frac{2h^2\sqrt{t^2+1} - th^2}{4h\sqrt{t^2+1} - 2ht}$$

$$= \frac{h}{2}.$$

Let O be the centre of the water surface FD, then since from (8)

$$\frac{l}{2} + th = h\sqrt{t^2+1},$$

therefore, in Fig. 133 CD = EG = OD.

Draw OF and OE perpendicular to CD and BC respectively.

Then, because the angle OFD is a right angle, the angles CDG and FOD are equal; and since OF = OD cos FOD, and DG = OE, and DG = CD cos CDG, therefore, OE = OF; and since OEC and OFC are right angles, a circle with O as centre will touch the sides of the channel, as in the case of the rectangular channel.

136. Depth of flow in a channel of given form that, (a) the velocity may be a maximum, (b) the discharge may be a maximum.

Taking the general formula

$$i = \frac{k \cdot v^n}{m^p}$$

and transposing,

$$v = \frac{i^{\frac{1}{n}} m^{\frac{p}{n}}}{k^{\frac{1}{n}}}.$$

For a given slope and roughness of the channel v is, therefore, proportional to the hydraulic mean depth and will be a maximum when m is a maximum.

That is, when the differential of $\frac{A}{P}$ is zero, or

$$PdA - AdP = 0 \ldots\ldots\ldots\ldots\ldots\ldots\ldots\ldots (1).$$

For maximum discharge, Av is a maximum, and therefore, $A \cdot \left(\frac{A}{P}\right)^{\frac{p}{n}}$ is a maximum.

Differentiating and equating to zero,

$$\frac{n+p}{n} PdA - \frac{p}{n} AdP = 0 \ldots\ldots\ldots\ldots\ldots\ldots (2).$$

Affixing values to n and p this differential equation can be solved for special cases. It will generally be sufficiently accurate to assume n is 2 and $p = 1$, as in the Chezy formula, then

$$\frac{n+p}{n} = \frac{3}{2},$$

and the equation becomes

$$3PdA - AdP = 0 \ldots\ldots\ldots\ldots\ldots\ldots\ldots\ldots (3).$$

137. Depth of flow in a circular channel of given radius and slope, when the velocity is a maximum.

Let r be the radius of the channel, and 2ϕ the angle subtended by the surface of the water at the centre of the channel, Fig. 134.

Then the wetted perimeter

$$P = 2r\phi,$$

and

$$dP = 2rd\phi.$$

The area $A = r^2\phi - r^2 \sin\phi \cos\phi = r^2\left(\phi - \frac{\sin 2\phi}{2}\right)$,

and

$$dA = r^2 d\phi - r^2 \cos 2\phi\, d\phi.$$

Substituting these values of dP and dA in equation (1), section 136,

$$\tan 2\phi = 2\phi.$$

The solution in this case is obtained directly as follows,

$$m = \frac{A}{P} = \frac{r}{2}\left(1 - \frac{\sin 2\phi}{2\phi}\right).$$

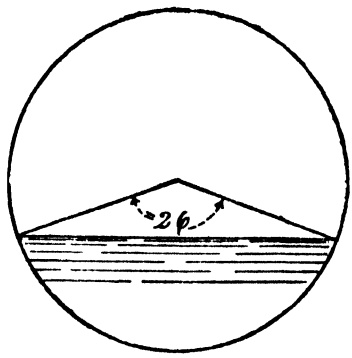

Fig. 134.

This will be a maximum when $\sin 2\phi$ is negative, and

$$\frac{\sin 2\phi}{2\phi}$$

is a maximum, or when

$$\frac{d}{d\phi}\left(\frac{\sin 2\phi}{2\phi}\right) = 0,$$

$$\therefore\ 2\phi \cos 2\phi - \sin 2\phi = 0,$$

and

$$\tan 2\phi = 2\phi.$$

The solution to this equation, for which 2ϕ is less than 360°, is

$$2\phi = 257° 27'.$$

Then

$$A = 2{\cdot}734r^2,$$

$$P = 4{\cdot}494r,$$

$$m = {\cdot}608r,$$

and the depth of flow $d = 1{\cdot}626r$.

138. Depth of flow in a circular channel for maximum discharge.

Substituting for dP and dA in equation (3), section 136,

$$6r^3\phi d\phi - 6r^3\phi \cos 2\phi d\phi - 2r^3\phi d\phi + r^3 \sin 2\phi d\phi = 0,$$

from which

$$4\phi - 6\phi \cos 2\phi + \sin 2\phi = 0,$$

and therefore

$$\phi = 154°.$$

Then

$$A = 3{\cdot}08r^2,$$

$$P = 5{\cdot}38r,$$

$$m = {\cdot}573r,$$

and the depth of flow $d = 1{\cdot}899r$.

Similar solutions can be obtained for other forms of channels, and may be taken by the student as useful mathematical exercises but they are not of much practical utility.

139. Curves of velocity and discharge for a given channel.

The depth of flow for maximum velocity, or discharge, can be determined very readily by drawing curves of velocity and discharge for different depths of flow in the channel. This method is useful and instructive, especially to those students who are not familiar with the differential calculus.

As an example, velocities and discharges, for different depths of flow, have been calculated for a large aqueduct, the profile of which is shown in Fig. 135, and the slope i of which is 0·0001326. The velocities and discharges are shown by the curves drawn in the figure.

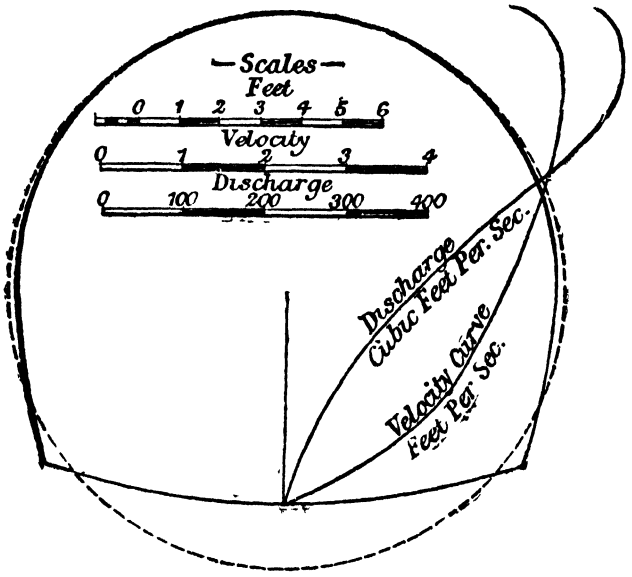

Fig. 135.

Values of A and P for different depths of flow were first determined and m calculated from them.

The velocities were calculated by the formula

$$v = C\sqrt{mi},$$

using values of C from column 3, Table XXI.

It will be seen that the velocity does not vary very much for all depths of flow greater than 3 feet, and that neither the velocity nor the discharge is a maximum when the aqueduct is full; the reason being that, as in the circular channel, as the surface of the water approaches the top of the aqueduct the wetted perimeter increases much more rapidly than the area.

The maximum velocity is obtained when m is a maximum and equal to 3·87, but the maximum discharge is given, when the depth of flow is greater than that which gives the greatest

velocity. A circle is shown on the figure which gives the same maximum discharge.

The student should draw similar curves for the egg-shaped sewer or other form of channel.

140. Applications of the formula.

Problem 1. To find the flow in a channel of given section and slope.

This is the simplest problem and can be solved by the application of either the logarithmic formula or by Bazin's formula.

The only difficulty that presents itself, is to affix values to k, n, and p in the logarithmic formula or to γ in Bazin's formula.

(1) *By the logarithmic formula.*

First assign some value to k, n, and p by comparing the lining of the channel with those given in Tables XXIV to XXXIII. Let ω be the cross sectional area of the water.

Then since
$$i=\frac{k\,.\,v^n}{m^p},$$
$$\log v=\frac{1}{n}\log i+\frac{p}{n}\log m-\frac{1}{n}\log k,$$
and
$$Q=\omega\,.\,v,$$
or
$$\log Q=\log\omega+\frac{1}{n}\log i+\frac{p}{n}\log m-\frac{1}{n}\log k.$$

(2) *By the Chezy formula, using Bazin's coefficient.*

The coefficient for a given value of m must be first calculated from the formula
$$C=\frac{157\cdot5}{1+\frac{\gamma}{\sqrt{m}}},$$
or taken from Table XXI.

Then
$$v=\frac{157\cdot5}{1+\frac{\gamma}{\sqrt{m}}}\sqrt{mi},$$
and
$$Q=\omega\,.\,v.$$

Example. Determine the flow in a circular culvert 9 ft. diameter, lined with smooth brick, the slope being 1 in 2000, and the channel half full.
$$m=\frac{\text{Area}}{\text{Wetted perimeter}}=\frac{d}{4}=2\cdot25'.$$

(1) *By the logarithmic formula*
$$i=\cdot000073\frac{v^{1\cdot88}}{m^{1\cdot15}}.$$
Therefore, $\log v=\frac{1}{1\cdot88}\log\cdot0005+\frac{1\cdot15}{1\cdot88}\log 2\cdot25-\frac{1}{1\cdot88}\log\cdot00007,$
$$v=4\cdot55 \text{ ft. per sec.},$$
$$\omega=\frac{\pi\,.\,4\cdot5^2}{2}=31\cdot8 \text{ sq. ft.},$$
$$Q=145 \text{ cubic feet per sec.}$$

(2) *By the Chezy formula, using Bazin's coefficient,*
$$C=\frac{157\cdot5}{1+\frac{\cdot29}{\sqrt{2\cdot25}}},$$
$$v=132\sqrt{2\cdot25\,.\,\tfrac{1}{2000}}=4\cdot43 \text{ ft. per sec.}$$
$$Q=31\cdot8\times4\cdot43=141 \text{ cubic ft. per sec.}$$

Problem 2. To find the diameter of a circular channel of given slope, for which the maximum discharge is Q cubic feet per second.

The hydraulic mean depth m for maximum discharge is $\cdot 573r$ (section 138) and $A = 3\cdot 08r^2$.

Then the velocity is $$v = \cdot 757C\sqrt{ri},$$

and $$Q = 2\cdot 33Cr^{\frac{5}{2}}\sqrt{i},$$

therefore $$r = \frac{1}{1\cdot 403}\sqrt[5]{\frac{Q^2}{C^2 i}},$$

and the diameter $$D = 1\cdot 42\sqrt[5]{\frac{Q^2}{C^2 . i}}.$$

The coefficient C is unknown, but by assuming a value for it, an approximation to D can be obtained; a new value for C can then be taken and a nearer approximation to D determined; a third value for C will give a still nearer approximation to D.

Example. A circular aqueduct lined with concrete has a diameter of 5′ 9″ and a slope of 1 foot per mile.

To find the diameter of two cast-iron siphon pipes 5 miles long, to be parallel with each other and in series with the aqueduct, and which shall have the same discharge; the difference of level between the two ends of the siphon being 12·5 feet.

The value of m for the aqueduct of circular section when the discharge is a maximum is $\cdot 573r = 1\cdot 64$ feet.

The area $A = 3\cdot 08r^2 = 25$ sq. feet.

Taking C as 130 from Table XXI for the brick culvert and 110 for the cast-iron pipe from Table XII, then

$$2 \times 110\sqrt{\frac{d}{4} \cdot \frac{12\cdot 5}{5 \times 5280}} \cdot \frac{\pi}{4} . d^2 = 25 \times 130\sqrt{\frac{1\cdot 64}{5280}}.$$

Therefore $$d^{\frac{5}{2}} = \frac{4 \times 25 \times 130 \times 2}{220 . \pi}\sqrt{\frac{1\cdot 64}{2\cdot 5}},$$

$$d = 4\cdot 00 \text{ feet.}$$

Problem 3. Having given the bottom width l, the slope i, and the side slopes t of a trapezoidal earth channel, to calculate the discharge for a given depth.

First calculate m from equation (5), section 135.

From Table XXI determine the corresponding value of C, or calculate C from Bazin's formula,

$$C = \frac{157\cdot 5}{1 + \frac{\gamma}{\sqrt{m}}},$$

then $$v = C\sqrt{mi},$$

and $$Q = A . v.$$

A convenient formula to remember is the approximate formula for ordinary earth channels

$$v = 50\sqrt{m^{\frac{3}{2}} i}$$
$$= 50\sqrt{mi\sqrt{m}}.$$

For values of m greater than 2, v as calculated from this formula is very nearly equal to v obtained by using Bazin's formula.

The formula $$i = \frac{\cdot 00037v^{2\cdot 1}}{m^{1\cdot 5}}$$

may also be used.

Example. An ordinary earth channel has a width $l=10$ feet, a depth $d=4$ feet, and a slope $i=\frac{1}{5000}$. Side slopes 1 to 1. To find Q.

$$A=56 \text{ sq. ft.},$$
$$P=21{\cdot}312 \text{ ft.},$$
$$m=2{\cdot}628 \text{ ft.},$$
$$C=\frac{157{\cdot}5}{1+\frac{2{\cdot}35}{\sqrt{2{\cdot}628}}}=64{\cdot}5,$$
$$\therefore\ v=1{\cdot}91 \text{ ft. per sec.},$$
$$Q=107 \text{ cubic ft. per sec.}$$

From the formula

$$v=50\sqrt{mi}\,\sqrt{m},$$
$$v=1{\cdot}88 \text{ ft. per sec.},$$
$$Q=105{\cdot}3 \text{ cubic ft. per sec.}$$

From the logarithmic formula

$$i=\frac{{\cdot}00037v^{2\,1}}{m^{1\,5}},$$
$$v=1{\cdot}9 \text{ ft. per sec.},$$
$$Q=106\ 4 \text{ cubic feet per sec.}$$

Problem 4. Having given the flow in a canal, the slope, and the side slopes, to find the dimensions of the profile and the mean velocity of flow,

(*a*) When the canal is of the best form.

(*b*) When the depth is given.

In the first case $m=\frac{h}{2}$, and from equations (8) and (4) respectively, section 185

$$l=2h\sqrt{t^2+1}-2th.$$
$$P=l+2h\sqrt{t^2+1}.$$

Therefore
$$m=\frac{A}{4h\sqrt{t^2+1}-2th}.$$

Substituting $\frac{h}{2}$ for m

$$h^2=\frac{A}{2\sqrt{t^2+1}-t},$$

and
$$A^2=h^4(2\sqrt{t^2+1}-t)^2.$$

But
$$v=\frac{Q}{A}=C\sqrt{mi}.$$

Therefore
$$C^2\frac{h}{2}i=\frac{Q^2}{h^4(2\sqrt{t^2+1}-t)^2},$$

and
$$h^5=\frac{2Q^2}{C^2\,.\,i\,(2\sqrt{t^2+1}-t)^2}\ \ldots\ldots\ldots\ldots\ldots\ldots\ldots\ldots(1).$$

A value for C should be chosen, say $C=70$, and h calculated, from which a mean value for $m=\frac{h}{2}$ can be obtained.

A nearer approximation to h can then be determined by choosing a new value of C, from Table XXI corresponding to this approximate value of m, and recalculating h from equation (1).

Example. An earthen channel to be kept in very good condition, having a slope of 1 in 10,000, and side slopes 2 to 1, is required to discharge 100 cubic feet per second; to find the dimensions of the channel; take $C=70$.

Then
$$h^5 = \frac{20{,}000}{\frac{4900}{10{,}000}(6{\cdot}1)}$$
$$= \frac{20{,}000}{{\cdot}49 \times 6{\cdot}1}$$
$$= 6700,$$
and
$$h = 5{\cdot}8 \text{ feet.}$$
Therefore
$$m = 2{\cdot}9.$$

From Table XXI, C = 84 for this value of m, therefore a nearer approximation to h is now found from
$$h^5 = \frac{20{,}000}{\frac{84^2}{10{,}000} \times 6{\cdot}1} = \frac{20{,}000}{{\cdot}67 \times 6\ 1},$$
from which $h = 5{\cdot}47$ ft. and $m = 2\ 74$.

The approximation is now sufficiently near for all practical purposes and may be taken as $5\frac{1}{2}$ feet.

Problem 5. Having given the depth d of a trapezoidal channel, the slope i, and the side slopes t, to find the bottom width l for a given discharge.

First using the Chezy formula,
$$v = C\sqrt{mi}$$
$$A = d\,(l + td), \quad P = l + 2d\sqrt{(t^2+1)},$$
and
$$m = \frac{d\,(l+td)}{l + 2d\sqrt{(t^2+1)}}.$$
The mean velocity
$$v = \frac{Q}{A}.$$
Therefore
$$\frac{Q}{d\,(l+td)} = C\sqrt{\frac{d\,(l+td)}{l+2d\sqrt{(t^2+1)}}\,i}.$$

In this equation the coefficient C is unknown, since it depends upon the value of m which is unknown, and even if a value for C be assumed the equation cannot very readily be solved. It is desirable, therefore, to solve by approximation.

Assume any value for m, and find from column 4, Table XXI, the corresponding value for C, and use these values of m and C.

Then, calculate v from the formula
$$v = C\sqrt{mi}.$$
Since
$$\frac{Q}{A} = v,$$
and
$$A = dl + td^2.$$
Therefore
$$dl + td^2 = \frac{Q}{v} \quad \text{.....(1).}$$

From this equation a value of l can be obtained, which will probably not be the correct value.

With this value of l calculate a new value for m, from the formula
$$m = \frac{d\,(l+td)}{l+2d\sqrt{(t^2+1)}} \quad \text{.....(2)}$$

For this value of m obtain a new value of C from the table, recalculate v, and by substitution in formula (1) obtain a second value for l.

On now again calculating m by substituting for d in formula (2), it will generally be found that m differs but little from m previously calculated; if so, the approximation has proceeded sufficiently far, and d as determined by using this value of m will agree with the correct value sufficiently nearly for all practical purposes.

The problem can be solved in a similar way by the logarithmic formula
$$i = \frac{kv^n}{m^p}.$$

The indices n and p may be taken as 2·1, and 1·5 respectively, and k as ·00037.

Example. The depth of an ordinary earth channel is 4 feet, the side slopes 1 to 1, the slope 1 in 6000 and the discharge is to be 7000 cubic feet per minute.

Find the bottom width of the channel.

Assume a value for m, say 2 feet.

From the logarithmic formula

$$2{\cdot}1 \log v = \log i + 1{\cdot}5 \log m - \bar{4}{\cdot}5682 \quad \text{.....(3)},$$

$$v = 1{\cdot}122 \text{ feet per sec.}$$

Then $$A = \frac{7000}{1{\cdot}122 \,.\, 60} = 104 \text{ sq. feet.}$$

But $$A = dl + td^2,$$

$$\therefore\ l = \frac{104 - 16}{4} = 22 \text{ feet.}$$

Substituting this value for l in equation (2)

$$m = \frac{4 \times 22 + 16}{22 + 8\sqrt{2}} = 3{\cdot}16.$$

Recalculating v from formula (3)

$$v = 1{\cdot}556.$$

Then $$A = 75 \text{ feet},$$

$$l = 14{\cdot}75 \text{ feet},$$

and $$m = 2{\cdot}88 \text{ feet}.$$

The first value of l is, therefore, too large, and this second value is too small.

Third values were found to be $v = 1{\cdot}455$,

$A = 80{\cdot}2$,

$l = 16{\cdot}05$,

$m = 2{\cdot}935$.

This value of l is again too large.

A fourth calculation gave $v = 1{\cdot}475$,

$A = 79{\cdot}2$,

$l = 15{\cdot}8$,

$m = 2{\cdot}92$.

The approximation has been carried sufficiently far, and even further than is necessary, as for such channels the coefficient of roughness k cannot be trusted to an accuracy corresponding to the small difference between the third and fourth values of l.

Problem 6. Having given the bottom width l, the slope i and the side slopes of a trapezoidal channel, to find the depth d for a given discharge.

This problem is solved exactly as 5 above, by first assuming a value for m, and calculating an approximate value for v from the formula $v = C\sqrt{mi}$.

Then, by substitution in equation (1) of the last problem and solving the quadratic,

$$d = \sqrt{\frac{Q}{vt} + \frac{l}{4t^2}} - \frac{l}{2t};$$

by substituting this value for d in equation (2), a new value for m can be found, and hence, a second approximation to d, and so on.

Using the logarithmic formula the procedure is exactly the same as for problem 5.

Problem 7*. Having a natural stream BC, Fig. 135*a*, of given slope, it is required to determine the point C, at which a canal, of trapezoidal section, which is to deliver a definite quantity of water to a given point A at a given level, shall be made to join the stream so that the cost of the canal is a minimum.

* The solution here given is practically the same as that given by M. Flamant in his excellent treatise *Hydraulique*.

Let I be the slope of the stream, i of the canal, h the height above some datum of the surface of the water at A, and h_1 of the water in the stream at B, at some distance L from C.

Let L be also the length and A the sectional area of the canal, and let it be assumed that the section of the canal is of the most economical form, or $m=\frac{d}{2}$.

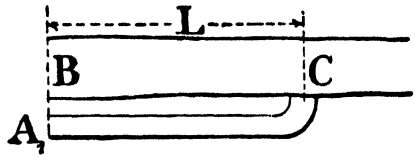

Fig. 135*a*.

The side slopes of the canal will be fixed according to the nature of the strata through which the canal is cut, and may be supposed to be known.

Then the level of the water at C is

$$h+\mathrm{L}i=h_1+\mathrm{LI}.$$

Therefore
$$\mathrm{L}=\frac{h-h_1}{\mathrm{I}-i}.$$

Let l be the bottom width of the canal, and t the slope of the sides. The cross section is then $dl+td^2$, and

$$m=\frac{\mathrm{A}}{\mathrm{P}}=\frac{dl+td^2}{l+2d\sqrt{t^2+1}}.$$

Substituting $2m$ for d,

$$l=4m\sqrt{t^2+1}-4tm,$$

and therefore
$$m=\frac{\mathrm{A}}{4m\sqrt{t^2+1}-4tm+4m\sqrt{t^2+1}},$$

from which
$$m^2=\frac{\mathrm{A}}{8\sqrt{t^2+1}-4t}.$$

The coefficient C in the formula $v=\mathrm{C}\sqrt{mi}$ may be assumed constant.

Then
$$v^2=\mathrm{C}^2mi,$$

and
$$v^4=\mathrm{C}^4m^2i^2.$$

For v substituting $\frac{\mathrm{Q}}{\mathrm{A}}$, and for m^2 the above value,

$$\frac{\mathrm{Q}^4}{\mathrm{A}^4}=\frac{\mathrm{C}^4\mathrm{A}i^2}{8\sqrt{t^2-1}-4t},$$

and
$$\mathrm{A}^5i^2=\frac{4\mathrm{Q}^4}{\mathrm{C}^4}(2\sqrt{t^2+1}-t).$$

Therefore
$$\mathrm{A}=\frac{\left\{\frac{4\mathrm{Q}^4}{\mathrm{C}^4}(2\sqrt{t^2+1}-t)\right\}^{\frac{1}{5}}}{i^{\frac{2}{5}}}.$$

The cost of the canal will be approximately proportional to the product of the length L and the cross sectional area, or to the cubical content of the excavation Let £k be the price per cubic yard including buying of land, excavation etc. Let £x be the total cost.

Then
$$£x=£k\,.\,\mathrm{L}\,.\,\mathrm{A}$$
$$=\frac{k\,.\,(h-h_1)}{i^{\frac{2}{5}}(\mathrm{I}-i)}\left\{\frac{4\mathrm{Q}^4}{\mathrm{C}^4}(2\sqrt{t^2+1}-t)\right\}^{\frac{1}{5}}.$$

This will be a minimum when $\frac{dx}{di}=0$.

Differentiating therefore, and equating to zero,

$$\tfrac{1}{5}i^{\frac{3}{5}}=\tfrac{2}{5}\mathrm{I}i^{-\frac{2}{5}},$$

and
$$i=\tfrac{2}{3}\mathrm{I}.$$

The most economical slope is therefore $\frac{2}{3}$ of the slope of the natural stream.

If instead of taking the channel of the best form the depth is fixed, the slope $i=\frac{1}{3}\,.\,\mathrm{I}$.

There have been two assumptions made in the calculation, neither of which is rigidly true, the first being that the coefficient C is constant, and the second that the price of the canal is proportional to its cross sectional area.

It will not always be possible to adopt the slope thus found, as the mean velocity must be maintained within the limits given on page 216, and it is not advisable that the slope should be less than 1 in 10,000.

EXAMPLES.

(1) The area of flow in a sewer was found to be 0·28 sq. feet; the wetted perimeter 1·60 feet; the inclination 1 in 38·7. The mean velocity of flow was 6·12 feet per second. Find the value of C in the formula $v = C\sqrt{mi}$.

(2) The drainage area of a certain district was 19·32 acres, the whole area being impermeable to rain water. The maximum intensity of the rainfall was 0·360 ins. per hour and the maximum rate of discharge registered in the sewer was 96 % of the total rainfall.

Find the size of a circular glazed earthenware culvert having a slope of 1 in 50 suitable for carrying the storm water.

(3) Draw a curve of mean velocities and a curve of discharge for an egg-shaped brick sewer, using Bazin's coefficient. Sewer, 6 feet high by 4 feet greatest width; slope 1 in 1200.

(4) The sewer of the previous question is required to join into a main outfall sewer. To cheapen the junction with the main outfall it is thought advisable to make the last 100 feet of the sewer of a circular steel pipe 3 feet diameter, the junction between the oval sewer and the pipe being carefully shaped so that there is no impediment to the flow.

Find what fall the circular pipe should have so that its maximum discharge shall be equal to the maximum discharge of the sewer. Having found the slope, draw out a curve of velocity and discharge.

(5) A canal in earth has a slope of 1 foot in 20,000, side slopes of 2 horizontal to 1 vertical, a depth of 22 feet, and a bottom width of 200 feet; find the volume of discharge.

Bazin's coefficient $\gamma = 2·35$.

(6) Give the diameter of a circular brick sewer to run half-full for a population of 80,000, the diurnal volume of sewage being 75 gallons per head, the period of maximum flow 6 hours, and the available fall 1 in 1000.

Inst. C. E. 1906.

(7) A channel is to be cut with side slopes of $1\frac{1}{2}$ to 1; depth of water, 3 feet; slope, 9 inches per mile: discharge, 6,000 cubic feet per minute. Find by approximation dimensions of channel.

(8) An area of irrigated land requires 2 cubic yards of water per hour per acre. Find dimensions of a channel 3 feet deep and with a side slope of 1 to 1. Fall, $1\frac{1}{2}$ feet per mile. Area to be irrigated, 6000 acres. (Solve by approximation.) $\gamma = 2·35$.

(9) A trapezoidal channel in earth of the most economical form has a depth of 10 feet and side slopes of 1 to 1. Find the discharge when the slope is 18 inches per mile. $\gamma = 2·35$.

(10) A river has the following section:—top width, 800 feet; depth of water, 20 feet; side slopes 1 to 1; fall, 1 foot per mile. Find the discharge, using Bazin's coefficient for earth channels.

(11) A channel is to be constructed for a discharge of 2000 cubic feet per second; the fall is $1\frac{1}{2}$ feet per mile; side slopes, 1 to 1; bottom width, 10 times the depth. Find dimensions of channel. Use the approximate formula, $v=50\sqrt{m^{\frac{3}{2}}i}$.

(12) Find the dimensions of a trapezoidal earth channel, of the most economical form, to convey 800 cubic feet per second, with a fall of 2 feet per mile, and side slopes, $1\frac{1}{2}$ to 1. (Approximate formula.)

(13) An irrigation channel, with side slopes of $1\frac{1}{2}$ to 1, receives 600 cubic feet per second. Design a suitable channel of 3 feet depth and determine its dimensions and slope. The mean velocity is not to exceed $2\frac{1}{2}$ feet per second. $\gamma=2{\cdot}35$.

(14) A canal, excavated in rock, has vertical sides, a bottom width of 160 feet, a depth of 22 feet, and the slope is 1 foot in 20,000 feet. Find the discharge. $\gamma=1{\cdot}54$.

(15) A length of the canal referred to in question (14) is in earth. It has side slopes of 2 horizontal to 1 vertical; its width at the water line is 290 feet and its depth 22 feet.

Find the slope this portion of the canal should have, taking γ as 2·35.

(16) An aqueduct $95\frac{7}{8}$ miles long is made up of a culvert $50\frac{7}{8}$ miles long and two steel pipes 3 feet diameter and 45 miles long laid side by side. The gradient of the culvert is 20 inches to the mile, and of the pipes 2 feet to the mile. Find the dimensions of a rectangular culvert lined with well pointed brick, so that the depth of flow shall be equal to the width of the culvert, when the pipes are giving their maximum discharge.

Take for the culvert the formula

$$i=\frac{{\cdot}000061\,v^{1{\cdot}88}}{m^{1{\cdot}15}},$$

and for the pipes the formula

$$i=\frac{{\cdot}00050\,.\,v^2}{d^{1{\cdot}25}}.$$

(17) The Ganges canal at Taoli was found to have a slope of 0·000146 and its hydraulic mean depth m was 7·0 feet; the velocity as determined by vertical floats was 2·80 feet per second; find the value of C and the value of γ in Bazin's equation.

(18) The following data were obtained from an aqueduct lined with brick carefully pointed:

m in metres	i	v in metres per sec.
·229	0·0001326	·336
·381	"	·484
·533	"	·596
·686	"	·691
·838	"	·769
·991	"	·848
1·143	"	·913
1·170	"	·922

Plot $\frac{1}{\sqrt{m}}$ as ordinates, $\frac{\sqrt{mi}}{v}$ as abscissae; find values of α and β in Bazin's formula, and thus deduce a value of γ for this aqueduct.

(19) An aqueduct $107\frac{1}{2}$ miles long consists of $13\frac{1}{3}$ miles of siphon, and the remainder of a masonry culvert 6 feet $10\frac{1}{2}$ inches diameter with a gradient of 1 in 8000. The siphons consist of two lines of cast-iron pipes 48 inches diameter having a slope of 1 in 500. Determine the discharge.

(20) An aqueduct consists partly of the section shown in Fig. 181, page 217, and partly (*i.e.* when crossing valleys) of 33 inches diameter cast-iron pipe siphons.

Determine the minimum slope of the siphons, so that the aqueduct may discharge 15,000,000 gallons per day, and the slope of the masonry aqueduct so that the water shall not be more than 4 feet 6 inches deep in the aqueduct.

(21) Calculate the quantity delivered by the water main in question (80), page 172, per day of 24 hours.

This amount, representing the water supply of a city, is discharged into the sewers at the rate of one-half the total daily volume in 6 hours, and is then trebled by rainfall. Find the diameter of the circular brick outfall sewer which will carry off the combined flow when running half full, the available fall being 1 in 1500. Use Bazin's coefficient for brick channels.

(22) Determine for a smooth cylindrical cast-iron pipe the angle subtended at the centre by the wetted perimeter, when the velocity of flow is a maximum. Determine the hydraulic mean depth of the pipe under these conditions. Lond. Un. 1905.

(23) A 9-inch drain pipe is laid at a slope of 1 in 150, and the value of c is 107 ($v=c\sqrt{mi}$). Find a general expression for the angle subtended at the centre by the water line, and the velocity of flow; and indicate how the general equations may be solved when the discharge is given. Lond. Un. 1906.

141. *Short account of the historical development of the pipe and channel formulae.* It seems remarkable that, although the practice of conducting water along pipes and channels for domestic and other purposes has been carried on for many centuries, no serious attempt to discover the laws regulating the flow seems to have been attempted until the eighteenth century. It seems difficult to realise how the gigantic schemes of water distribution of the ancient cities could have been executed without such knowledge, but certain it is, that whatever information they possessed, it was lost during the middle ages.

It is of peculiar interest to note the trouble taken by the Roman engineers in the construction of their aqueducts. In order to keep the slope constant they tunnelled through hills and carried their aqueducts on magnificent arches. The Claudian aqueduct was 38 miles long and had a constant slope of five feet per mile. Apparently they were unaware of the simple fact that it is not necessary for a pipe or aqueduct connecting two reservoirs to be laid perfectly straight, or else they wished the water at all parts of the aqueducts to be at atmospheric pressure.

Stephen Schwetzer in his interesting treatise on hydrostatics and hydraulics published in 1729 quotes experiments by Marriott showing that, a pipe 1400 yards long, $1\frac{5}{8}$ inches diameter, only gave $\frac{5}{8}$ of the discharge which a hole $1\frac{5}{8}$ inches diameter in the side of a tank would give under the same head, and also explains that the motion of the liquid in the pipes is diminished by friction, but he is entirely ignorant of the laws regulating the flow of fluids through pipes. Even as late as

1786 Du Buat* wrote, "We are yet in absolute ignorance of the laws to which the movement of water is subjected."

The earliest recorded experiments of any value on long pipes are those of Couplet, in which he measured the flow through the pipes which supplied the famous fountains of Versailles in 1732. In 1771 Abbé Bossut made experiments on flow in pipes and channels, these being followed by the experiments of Du Buat, who erroneously argued that the loss of head due to friction in a pipe was independent of the internal surface of the pipe, and gave a complicated formula for the velocity of flow when the head and the length of the pipe were known.

In 1775 M. Chezy from experiments upon the flow in an open canal, came to the conclusion that the fluid friction was proportional to the velocity squared, and that the slope of the channel multiplied by the cross sectional area of the stream, was equal to the product of the length of the wetted surface measured on the cross section, the velocity squared, and some constant, or

$$iA = Pav^2 \quad \ldots\ldots\ldots\ldots\ldots\ldots\ldots\ldots\ldots (1),$$

i being the slope of the bed of the channel, A the cross sectional area of the stream, P the wetted perimeter, and a a coefficient.

From this is deduced the well-known Chezy formula

$$v = C\sqrt{\frac{A}{P}i} = C\sqrt{mi}.$$

Prony†, applying to the flow of water in pipes the results of the classical experiments of Coulomb on fluid friction, from which Coulomb had deduced the law that fluid friction was proportional to $av + bv^2$, arrived at the formula

$$mi = av + \beta v^2 = \left(\frac{a}{v} + \beta\right) v^2.$$

This is similar to the Chezy formula, $\left(\frac{a}{v} + \beta\right)$ being equal to $\frac{1}{C^2}$.

By an examination of the experiments of Couplet, Bossut, and Du Buat, Prony gave values to a and β which when transformed into British units are,

$$a = \cdot 00001733,$$
$$\beta = \cdot 00010614.$$

For velocities, above 2 feet per second, Prony neglected the term containing the first power of the velocity and deduced the formula

$$v = 48\cdot 6\sqrt{d \,.\, i}.$$

He continued the mistake of Du Buat and assumed that the friction was independent of the condition of the internal surface of the pipe and gave the following explanation: "When the fluid flows in a pipe or upon a wetted surface a film of fluid adheres to the surface, and this film may be regarded as enclosing the mass of fluid in motion‡." That such a film encloses the moving water receives support from the experiments of Professor Hele Shaw§. The experiments were made upon such a small scale that it is difficult to say how far the results obtained are indicative of the conditions of flow in large pipes, and if the film exists it does not seem to act in the way argued by Prony.

The value of i in Prony's formula was equal to $\frac{H}{l}$, H including, not only the loss of head due to friction but, as measured by Couplet, Bossut and Du Buat, it also included the head necessary to give velocity to the water and to overcome resistances at the entrance to the pipe.

Eytelwein and also Aubisson, both made allowances for these losses, by subtracting from H a quantity $\frac{cv^2}{2g}$, and then determined new values for a and b in the formula

$$h = H - \frac{cv^2}{2g} = (av + bv^2)\frac{l}{m}.$$

* *Le Discours préliminaire de ses Principes d'hydraulique.*

† See also Girard's *Movement des fluids dans les tubes capillaires*, 1817.

‡ *Traité d'hydraulique.* § *Engineer*, Aug. 1897 and May 1898.

They gave to a and b the following values.

Eytelwein $a = \cdot 000023584$,
$b = \cdot 000085434$.

Aubisson* $a = \cdot 000018837$,
$b = \cdot 000104392$.

By neglecting the term containing v to the first power, and transforming the terms, Aubisson's formula reduces to

$$v = 48\sqrt{\frac{\mathrm{H}d}{l + 35\cdot 5d}}.$$

Young, in the *Encyclopaedia Britannica*, gave a complicated formula for v when H and d were known, but gave the simplified formula, for velocities such as are generally met with in practice,

$$v = 50\sqrt{\frac{\mathrm{H}d}{l + 50d}}.$$

St Venant made a decided departure by making $\frac{h}{l}$ proportional to $v^{\frac{12}{7}}$ instead of to v^2 as in the Chezy formula.

When expressed in English feet as units, his formula becomes

$$v = 206\,(mi)^{\frac{7}{12}}.$$

Weisbach by an examination of the early experiments together with ten others by himself and one by M. Gueynard gave to the coefficient a in the formula $h = \frac{av^2l}{m}$ the value

$$\left(\alpha + \frac{\beta}{\sqrt{v}}\right),$$

that is, he made it to vary with the velocity.

Then, $$mi = \left(\alpha + \frac{\beta}{v}\right)v^2,$$

the values of α and β being $\alpha = 0\ 0144$,
$\beta = 0\cdot 01716$.

From this formula tables were drawn up by Weisbach, and in England by Hawkesley, which were considerably used for calculations relating to flow of water in pipes.

Darcy, as explained in Chapter V, made the coefficient a to vary with the diameter, and Hagen proposed to make it vary with both the velocity and the diameter.

His formula then became $$mi = \left(\frac{\alpha}{dv} + \beta\right)v^2.$$

The formulae of Ganguillet and Kutter and of Bazin have been given in Chapters V and VI.

Dr Lampe from experiments on the Dantzig mains and other pipes proposed the formula

$$i = \frac{av^{1\cdot 802}}{d^{1\cdot 25}},$$

thus modifying St Venant's formula and anticipating the formulae of Reynolds, Flamant and Unwin, in which,

$$i = \frac{\gamma v^n}{d^p},$$

n and p being variable coefficients.

* *Traité d'hydraulique.*

CHAPTER VII.

*GAUGING THE FLOW OF WATER

142. Measuring the flow of water by weighing.

In the laboratory or workshop a flow of water can generally be measured by collecting the water in tanks, and either by direct weighing, or by measuring the volume from the known capacity of the tank, the discharge in a given time can be determined. This is the most accurate method of measuring water and should be adopted where possible in experimental work.

In pump trials or in measuring the supply of water to boilers, determining the quantity by direct weighing has the distinct advantage that the results are not materially affected by changes of temperature. It is generally necessary to have two tanks, one of which is filling while the other is being weighed and emptied. For facility in weighing the tanks should stand on the tables of weighing machines.

143. Meters.

Linert meter. An ingenious direct weighing meter suitable for gauging practically any kind of liquid, is constructed as shown in Figs. 136 and 137.

It consists of two tanks A^1 and A^2, each of which can swing on knife edges BB. The liquid is allowed to fall into a shoot F, which swivels about the centre J, and from which it falls into either A^1 or A^2 according to the position of the shoot. The tanks have weights D at one end, which are so adjusted that when a certain weight of water has run into a tank, it swings over into the dotted position, Fig. 136, and flow commences through a siphon pipe C. When the level of the liquid in the tank has fallen sufficiently, the weights D cause the tank to come back to its original position, but the siphon continues in action until the tank is empty. As the tank turns into the dotted position

* See Appendix, pages 561 and 566.

it suddenly tilts over the shoot F, and the liquid is discharged into the other tank. An indicator H registers the number of times the tanks are filled, and as at each tippling a definite weight of fluid is emptied from the tank, the indicator can be marked off in pounds or in any other unit.

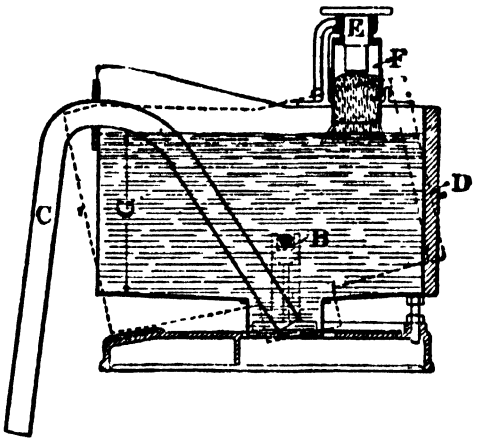

Fig. 136.

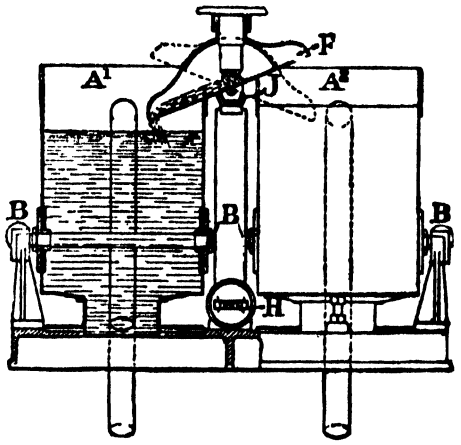

Fig. 137.

Linert direct weighing meter.

144. Measuring the flow by means of an orifice.

The coefficient of discharge of sharp-edged orifices can be obtained, with considerable precision, from the tables of Chapter IV, or the coefficient for any given orifice can be determined for various heads by direct measurement of the flow in a given time, as described above. Then, knowing the coefficient of discharge at various heads a curve of rate of discharge for the orifice, as in Fig. 138, may be drawn, and the orifice can then be used to measure a continuous flow of water.

The orifice should be made in the side or bottom of a tank. If in the side of the tank the lower edge should be at least one and a half to twice its depth above the bottom of the tank, and the sides of the orifice whether horizontal or vertical should be at least one and a half to twice the width from the sides of the tank. The tank should be provided with baffle plates, or some other arrangement, for destroying the velocity of the incoming water and ensuring quiet water in the neighbourhood of the orifice. The coefficient of discharge is otherwise indefinite. The head over the orifice should be observed at stated intervals. A head-time curve having head as ordinates and time as abscissae can then be plotted as in Fig. 139.

From the head-discharge curve of Fig. 138 the rate of discharge can be found for any head h, and the curve of Fig. 139 plotted. The area of this curve between any two ordinates AB and CD,

which is the mean ordinate between AB and CD multiplied by the time t, gives the discharge from the orifice in time t.

The head h can be measured by fixing a scale, having its zero coinciding with the centre of the orifice, behind a tube on the side of the tank.

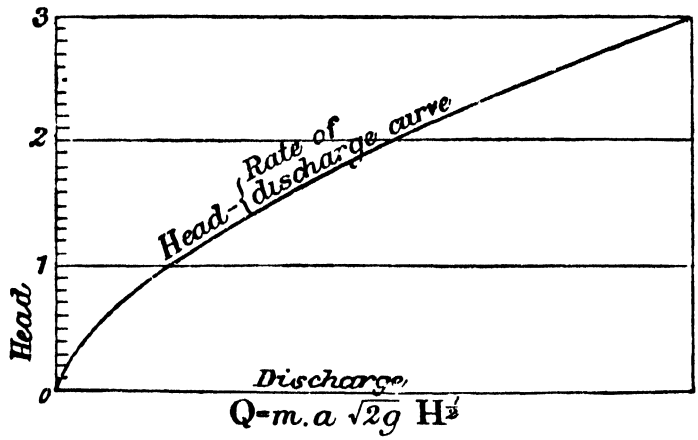

Fig. 138.

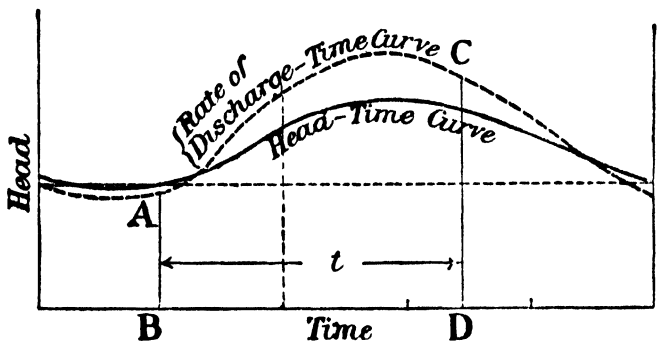

Fig. 139.

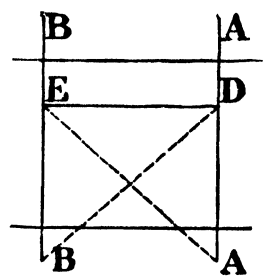

Fig. 140.

145. Measuring the flow in open channels.

Large open channels: floats. The oldest and simplest method of determining approximately the discharge in an open channel is by means of floats.

A part of the channel as straight as possible is selected, and in which the flow may be considered as uniform.

The readings should be taken on a calm day as a down-stream wind will accelerate the floats and an up-stream wind retard them.

Two cords are stretched across the channel, as near to the surface as possible, and perpendicular to the direction of flow. The distance apart of the cords should be as great as possible consistent with uniform flow, and should not be less than 150 feet. From a boat, anchored at a point not less than 50 to 70 feet above stream, so that the float shall acquire before reaching the first line a uniform velocity, the float is allowed to fall into the stream and

the time carefully noted by means of a chronometer at which it passes both the first and second line. If the velocity is slow, the observer may walk along the bank while the float is moving from one cord to the other, but if it is greater than 200 feet per minute two observers will generally be required, one at each line.

A better method, and one which enables any deviation of the float from a path perpendicular to the lines to be determined, is, for two observers provided with box sextants, or theodolites, to be stationed at the points A and B, which are in the planes of the two lines. As the float passes the line AA at D, the observer at A signals, and the observer at B measures the angle ABD and, if both are provided with watches, each notes the time. When the float passes the line BB at E, the observer at B signals, and the observer at A measures the angle BAE, and both observers again note the time. The distance DE can then be accurately determined by calculation or by a scale drawing, and the mean velocity of the float obtained, by dividing by the time.

To ensure the mean velocities of the floats being nearly equal to the mean velocity of the particles of water in contact with them, their horizontal dimensions should be as small as possible, so as to reduce friction, and the portion of the float above the surface of the water should be very small to diminish the effect of the wind.

As pointed out in section 130, the distribution of velocity in any transverse section is not by any means uniform and it is necessary, therefore, to obtain the mean velocity on a number of vertical planes, by finding not only the surface velocity, but also the velocity at various depths on each vertical.

146. Surface floats.

Surface floats may consist of washers of cork, or wood, or other small floating bodies, weighted so as to just project above the water surface. The surface velocity is, however, so likely to be affected by wind, that it is better to obtain the velocity a short distance below the surface.

147. Double floats.

To measure the velocity at points below the surface double floats are employed. They consist of two bodies connected by means of a fine wire or cord, the upper one being made as small as possible so as to reduce its resistance.

Gordon*, on the Irrawaddi, used two wooden floats connected by a fine fishing line, the lower float being a cylinder 1 foot long,

* *Proc. Inst. C. E.*, 1893.

and 6 inches diameter, hollow underneath and loaded with clay to sink it to any required depth; the upper float, which swam on the surface, was of light wood 1 inch thick, and carried a small flag.

The surface velocity was obtained by sinking the lower float to a depth of $3\frac{1}{4}$ feet, the velocity at this depth being not very different from the surface velocity and the motion of the float more independent of the effect of the wind.

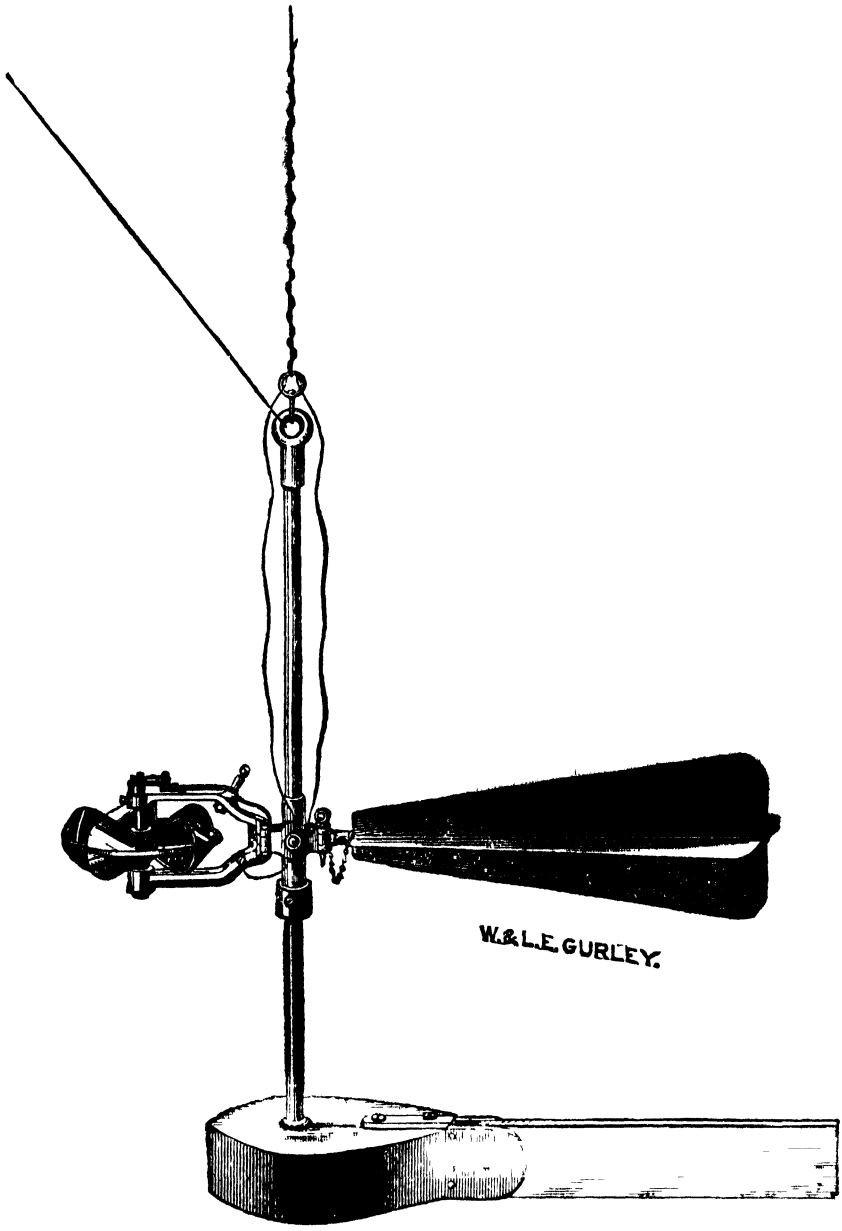

Fig. 141. Gurley's current meter.

Subsurface velocities were measured by increasing the depths of the lower float by lengths of $3\frac{1}{4}$ feet until the bottom was reached.

Gordon has compared the results obtained by floats with those obtained by means of a current meter (see section 149). For small depths and low velocities the results obtained by double floats are fairly accurate, but at high velocities and great depths, the velocities obtained are too high. The error is from 0 to 10 per cent.

Double floats are sometimes made with two similar floats, of the same dimensions, one of which is ballasted so as to float at any required depth and the other floats just below the surface. The velocity of the float is then the mean of the surface velocity and the velocity at the depth of the lower float.

148. Rod floats.

The mean velocity, on any vertical, may be obtained approximately by means of a rod float, which consists of a long rod having at the lower end a small hollow cylinder, which may be filled with lead or other ballast so as to keep the rod nearly vertical.

The rod is made sufficiently long, and the ballast adjusted, so that its lower end is near to the bed of the stream, and its upper end projects slightly above the water. Its velocity is approximately the mean velocity in the vertical plane in which it floats.

149. The current meter.

The discharge of large channels or rivers can be obtained most conveniently and accurately by determining the velocity of flow at a number of points in a transverse section by means of a current meter.

The arrangement shown in Fig. 141 is a meter of the anemometer type. A wheel is mounted on a vertical spindle and has five conical buckets. The spindle revolves in bearings, from which all water is excluded, and which are carefully made so that the friction shall remain constant. The upper end of the spindle extends above its bearing, into an air-tight chamber, and is shaped to form an eccentric. A light spring presses against the eccentric, and successively makes and breaks an electric circuit as the wheel revolves. The number of revolutions of the wheel is recorded by an electric register, which can be arranged at any convenient distance from the wheel. When the circuit is made, an electro-magnet in the register moves a lever, at the end of which is a pawl carrying forward a ratchet wheel one tooth for each revolution of the spindle. The frame of the meter, which is made of bronze, is pivoted to a hollow cylinder which can be clamped in any desired position to a vertical rod. At the right-

hand side is a rudder having four light metal wings, which balances the wheel and its frame. When the meter is being used in deep waters it is suspended by means of a fine cable, and to the lower end of the rod is fixed a lead weight. The electric circuit wires are passed through the trunnion and so have no tendency to pull the meter out of the line of current. When placed in a current the meter is free to move about the horizontal axis, and also about a vertical axis, so that it adjusts itself to the direction of the current.

The meters are rated by experiment and the makers recommend the following method. The meter should be attached to the bow of a boat, as shown in Fig. 142, and immersed in still water not less than two feet deep. A thin rope should be attached to the boat, and passed round a pulley in line with the course in which the boat is to move. Two parallel lines about 200 feet apart should be staked on shore and at right angles to the course of the boat. The boat should be without a rudder, but in the boat with the observer should be a boatman to keep the boat from running

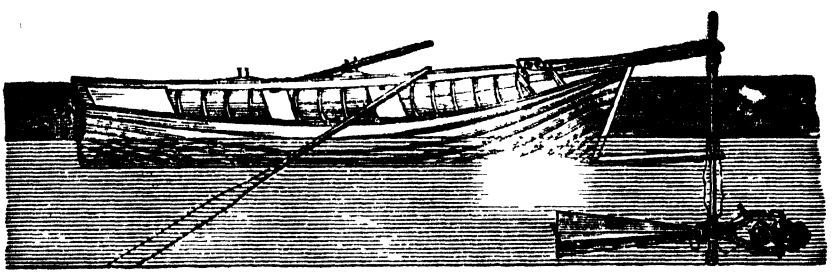

Fig 142.

into the shore. The boat should then be hauled between the two ranging lines at varying speeds, which during each passage should be as uniform as possible. With each meter a reduction table is supplied from which the velocity of the stream in feet per second can be at once determined from the number of revolutions recorded per second of the wheel.

The Haskell meter has a wheel of the screw propeller type revolving upon a horizontal axis. Its mode of action is very similar to the one described.

Comparative tests of the discharges along a rectangular canal as measured by these two meters and by a sharp-edged weir which had been carefully calibrated, in no case differed by more than 5 per cent. and the agreement was generally much closer*.

* Murphy on current Meter and Weir discharges, *Proceedings Am. S. C.E.*, Vol. xxvii., p. 779.

150. *Pitot tube.

Another apparatus which can be used for determining the ›locity at a point in a flowing stream, even when the stream is of ıall dimensions, as for example a small pipe, is called a Pitot be.

In its simplest form, as originally proposed by Pitot in 1732, consists of a glass tube, with a ıall orifice at one end which may › turned to receive the impact of e stream as shown in Fig. 143. ıe water in the tube rises to a ›ight h above the free surface of e water, the value of h depending ›on the velocity v at the orifice of e tube. If a second tube is placed ›side the first with an orifice O parallel to the direction of flow, e water will rise in this tube nearly to the level of the free rface, the fall h_1 being due to a slight diminution in pressure the mouth of the tube, caused probably by the stream lines ıving their directions changed at the mouth of the tube. A rther depression of the free surface in the tube takes place, the tube, as EF, is turned so that the orifice faces down stream.

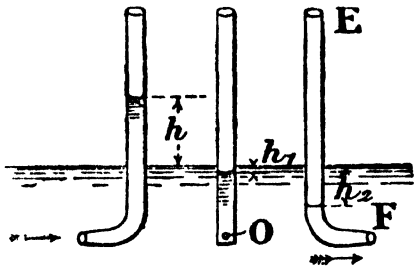

Fig. 143. Pitot tube.

Theory of the Pitot tube. Let it be assumed that immediately ›ar the opening of the pitot tube that is facing up stream the ıter is at rest, or there is, what is called, dead water near the ifice. If a horizontal stream line be supposed approaching the ıfice in which the velocity of flow is v at some distance from e orifice, then, for this stream line $\frac{p}{w} + \frac{v^2}{2g} = \text{constant}$.

Let p_0 be the pressure at the tube opening. Then $\frac{p_0}{w} + 0 = \frac{p}{w} + \frac{v^2}{2g}$

$\frac{p_0 - p}{w} = h = \frac{v^2}{2g}$, where h is the head in the tube.

Fig. 143*a* shows a number of Pitot tubes impact surfaces, for ıich Mr W. M. White has determined the coefficients by

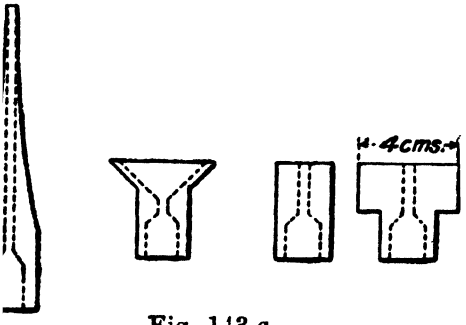

Fig. 143 *a*.

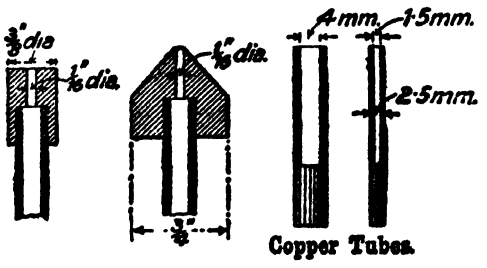

Fig. 143 *b*.

* See page 560.

measuring the height of a column of water produced by a jet issuing from a horizontal orifice, and also by moving them through still water. In all cases the coefficient k was unity. Fig. 143 *b* shows impact surfaces for which the author has determined the coeff c'ents by inserting them in a jet of water issuing from a vertical orifice, the coefficient of velocity for which at all heads was carefully determined by the method described on page 55. Fry and Tyndall by experiments on Pitot tubes revolving in air found a value for k equal to unity, and Burnham*, using a tube consisting of two brass tubes one in the other, the inner one $\frac{3}{16}$ inch outside diameter and $\frac{1}{32}$ inch thick, forming the impact tube, and the outer pressure tube made of $\frac{3}{8}$ inch diameter tube $\frac{1}{32}$ inch thick, provided with a slit $1\frac{1}{4}$ inches long by $\frac{1}{16}$ inch wide for transmitting the static pressure, also found k to be constant and equal to unity. If the walls of the impact tube are made very thin the constant may differ perceptibly from unity. Fry and Tyndall found that a tube ·177 mm. diameter with walls ·027 mm. thick gave a value of k several per cent. above unity, but when a small mica plate 2 mm. diameter was fitted on the end of the tube k was unity. The position of the pressure holes in the static pressure tube also affects the constant, and if the constant unity is to be relied upon they should be removed some distance from the impact face. The author has found in experimenting on the velocity of flow in jets issuing from orifices, that, by using two small aluminium tubes side by side and their ends flush with each other, one of which had the end plugged and the other open, the plugged one having small holes pierced through the tube perpendicular to the axis of the tube very near to the end, the coefficient k was with some of the tube combinations as much as 10 per cent. greater than unity, but when the impact tube was used alone the coefficient was exactly equal to unity, indicating that the variation of k was due to uncertain effects on the static pressure openings.

Darcy† was the first to use the Pitot tube as an instrument of precision. His improved apparatus as used in open channels consisted of two tubes placed side by side as in Fig. 144, the orifices in the tubes facing up-stream and down-stream respectively. The two tubes were connected at the top, a cock C^1 being placed in the common tube to allow the tubes to be opened or closed to the atmosphere. At the lower end both tubes could be closed at the same time by means of cock C. When the apparatus is put into

* *Eng. News*, Dec. 1905.
† *Recherches Hydrauliques*, etc., 1857.

flowing water, the cocks C and C^1 being open, the free surface rises in the tube B a height h_1 and is depressed in D an amount h_2. The cock C^1 is then closed, and the apparatus can be taken from the water and the difference in the level of the two columns,

$$h = h_1 + h_2,$$

measured with considerable accuracy.

If desired, air can be aspirated from the tubes and the columns made to rise to convenient levels for observation, without moving the apparatus. The difference of level will be the same, whatever the pressure in the upper part of the tubes.

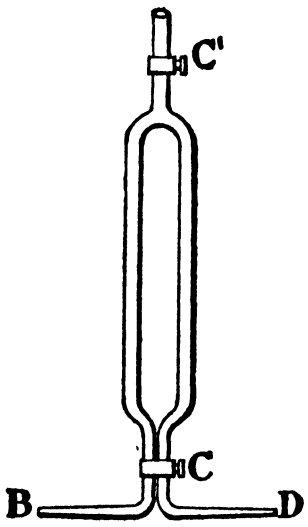

Fig. 144.

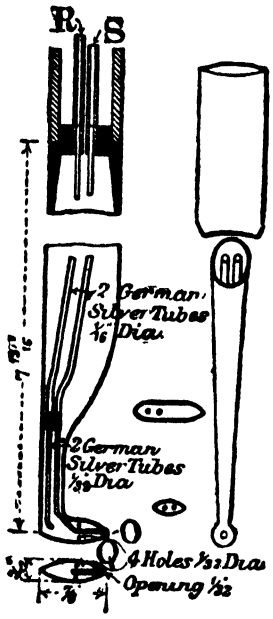

Fig. 145.

Fig. 145 shows one of the forms of Pitot tubes, as experimented upon by Professor Gardner Williams*, and used to determine the distribution of velocities of the water flowing in circular pipes.

The arrangement shown in Fig. 146 is a modified form of the apparatus used by Freeman† to determine the distribution of velocities in a jet of water issuing from a fire hose under considerable pressure. As shown in the sketch, the small orifice O receives the impact of the stream and two small holes Q are drilled in the tube T in a direction perpendicular to the flow. The lower part of the apparatus OV, as shown in the sectional plan, is made boat-shaped so as to prevent the formation of eddies in the neighbourhood of the orifices. The pressure at the orifice O is

* For other forms of Pitot tubes as used by Professor Williams, E. S. Cole and others, see *Proceedings of the Am.S.C.E.*, Vol. XXVII.

† *Transactions of the Am.S C.E.*, Vol. XXI.

transmitted through the tube OS, and the pressure at Q through the tube QR. To measure the difference of pressure, or head, in the two tubes, OS and QR were connected to a differential gauge, similar to that described in section 13, and very small differences of head could thus be obtained with great accuracy.

The tube shown in Fig. 145 has a cigar-shaped bulb, the impact orifice O being at one end and communicating with the

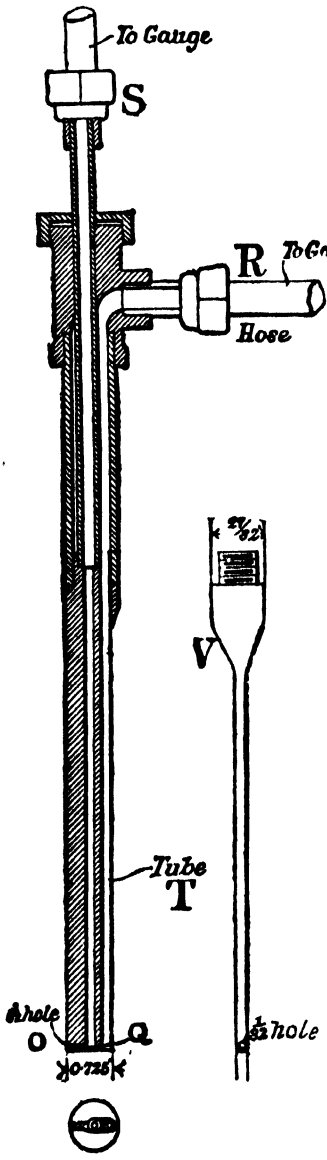

Fig. 146.

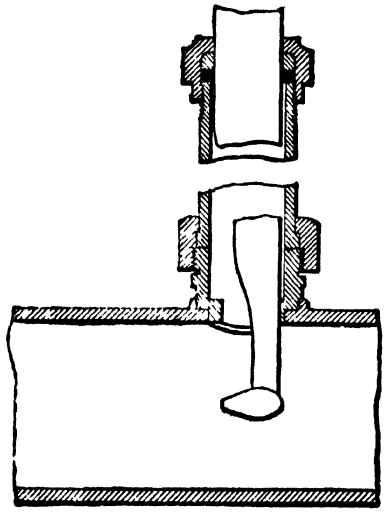

Fig. 147.

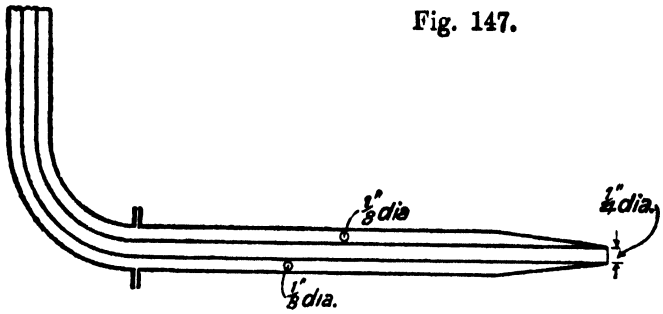

Fig. 147 *a*. Gregory Pitot tube having a coefficient of unity.

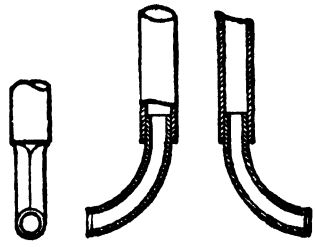

Fig. 148.

tube OS. There are four small openings in the side of the bulb, so that any variations of pressure outside are equalised in the bulb. The pressures are transmitted through the tubes OS and QR to a differential gauge as in the case above.

In Fig. 147 is shown a special stuffing-box used by Professor

Williams, to allow the tube to be moved to the various positions in the cross section of a pipe, at which it was desired to determine the velocity of translation of the water*.

Mr E. S. Cole† has used the Pitot tube as a continuous meter, the arrangement being shown in Fig. 148. The tubes were connected to a U tube containing a mixture of carbon tetrachloride and gasoline of specific gravity 1·25. The difference of level of the two columns was registered continuously by photography.

The tubes shown in Figs. 149—150 were used by Bazin to determine the distribution of velocity in the interior of jets issuing from orifices, and in the interior of the nappes of weirs. Each tube consisted of a copper plate 1·89 inches wide, by ·1181 inch thick, sharpened on the upper edge and having two brass tubes ·0787 inch diameter, soldered along the other edge, and having orifices ·059 inch diameter, 0·394 inch apart. The opening in tube A was arranged perpendicular to the stream, and in B on the face of the plate parallel to the stream.

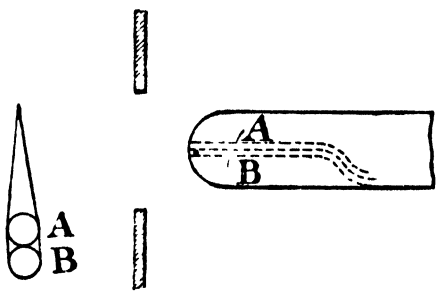

Fig. 149.

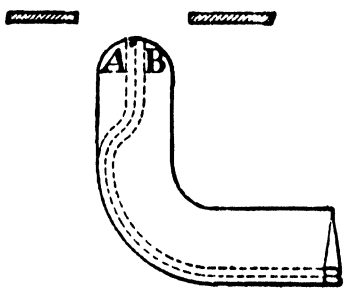

Fig. 150.

151. Calibration of Pitot tubes.

To calibrate the tubes used in the determination of the distribution of velocities in open channels, Darcy‡ and Bazin used three distinct methods.

(*a*) The tube was placed in front of a boat which was drawn through still water at different velocities. The coefficient was 1·034. This was considered too large as the bow of the boat probably tilted a little, as it moved through the water, thus tilting the tube so that the orifice was not exactly vertical.

(*b*) The tube was placed in a stream, the velocity of which was determined by floats. The coefficient was 1·006.

(*c*) Readings were taken at different points in the cross section of a channel, the total flow Q through which was carefully measured by means of a weir. The water section was divided

* See page 144.

† *Proc. A.M.S.C.E.*, Vol. XXVII. See also experiments by Murphy and Torrance in same volume.

‡ *Recherches Hydrauliques.*

into areas, and about the centre of each a reading of the tube was taken. Calling a the area of one of these sections, and h the reading of the tube, the coefficient

$$k = \frac{Q}{\Sigma a \sqrt{2gh}},$$

and was found to be ·993.

Darcy* and Bazin also found that by changing the position of the orifice in the pressure tube the coefficients changed considerably.

Williams, Hubbell and Fenkell used two methods of calibration which gave very different results.

The first method was to move the tubes through still water at known velocities. For this purpose a circumferential trough, rectangular in section, 9 inches wide and 8 inches deep was built of galvanised iron. The diameter of its centre line, which was made the path of the tube, was 11 feet 10 inches. The tube to be rated was supported upon an arm attached to a central shaft which was free to revolve in bearings on the floor and ceiling, and which also supported the gauge and a seat for the observer. The gauge was connected with the tube by rubber hose. The arm carrying the tube was revolved by a man walking behind it, at as uniform a rate as possible, the time of the revolution being taken by means of a watch reading to $\frac{1}{5}$ of a second. The velocity was maintained as nearly constant as possible for at least a period of 5 minutes. The value of k as determined by this method was ·926 for the tube shown in Fig. 145.

In the second method adopted by these workers, the tube was inserted into a brass pipe 2 inches in diameter, the discharge through which was obtained by weighing. Readings were taken at various positions on a diameter of the pipe, while the flow in the pipe was kept constant. The values of $\sqrt{2gh}$, which may be called the tube velocities, could then be calculated, and the mean value V_m of them obtained. It was found that, in the cases in which the form of the tube was such that the volume occupied by it in the pipe was not sufficient to modify the flow, the velocity was a maximum at, or near, the centre of the pipe. Calling this maximum velocity V_c, the ratio $\frac{V_m}{V_c}$ for a given set of readings was found to be ·81. Previous experiments on a cast-iron pipe line at Detroit having shown that the ratio $\frac{V_c}{V_m}$ was practically constant for all velocities,

* *Recherches Hydrauliques.*

a similar condition was assumed to obtain in the case of the brass pipe. The tube was then fixed at the centre of the pipe, and readings taken for various rates of discharge, the mean velocity U, as determined by weight, varying from $\frac{1}{4}$ to 6 feet per second. For the values of h thus determined, it was found that $\frac{U}{\sqrt{2gh}}$ was practically constant. This ratio was ·729 for the tube shown in Fig. 145.

Then since for any reading h of the tube, the velocity v is

$$v = k\sqrt{2gh},$$

the actual mean velocity $U = kV_m$,

or

$$k = \frac{U}{V_m}.$$

But

$$\frac{U}{V_m} = \frac{U}{V_c}\frac{V_c}{V_m}.$$

Therefore

$$k = \frac{\text{ratio of U to } V_c}{\text{ratio of } V_m \text{ to } V_c} = \frac{\cdot 729}{\cdot 814} = \cdot 89.$$

For the tube shown in Fig. 146, some of the values of k as determined by the two methods differed very considerably.

It will be seen that the value of k determined by moving the tube through still water, according to the above results, differs from that obtained from the running water in a pipe. Other experiments, however, on tubes the coefficients for which were obtained by moving through still water and by being placed in jets of water issuing from sharp-edged orifices, show that the coefficient is unity in both cases. Professor Gregory* using a tube (Fig. 147*a*), consisting of an impact tube $\frac{1}{4}$ inch diameter surrounded by a tapering tube of larger diameter in which were drilled the static openings at a mean distance of 12·5 inches from the impact opening, found that the coefficient was unity when moved through still water, or when it was placed in flowing water in a pipe.

152. Gauging by a weir.

When a stream is so small that a barrier or dam can be easily constructed across it, or when a large quantity of water is required to be gauged in the laboratory, the flow can be determined by means of a notch or weir.

* *Trans. Am.S.M.E*, 1904.

The channel as it approaches the weir should be as far as possible uniform in section, and it is desirable for accurate gauging*, that the sides of the channel be made vertical, and the width equal to the width of the weir. The sill should be sharp-edged, and perfectly horizontal, and as high as possible above the bed of the stream, and the down-stream channel should be wider than the weir to ensure atmospheric pressure under the nappe. The difference in level of the sill and the surface of the water, before it begins to slope towards the weir, should be accurately measured. This is best done by a Boyden hook gauge.

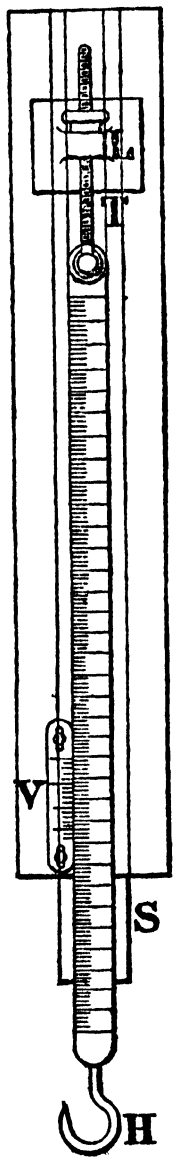

Fig. 151.

153. The hook gauge.

A simple form of hook gauge as made by Gurley is shown in Fig. 151. In a rectangular groove formed in a frame of wood, three or four feet long, slides another piece of wood S to which is attached a scale graduated in feet and hundredths, similar to a level staff. To the lower end of the scale is connected a hook H, which has a sharp point. At the upper end of the scale is a screw T which passes through a lug, connected to a second sliding piece L. This sliding piece can be clamped to the frame in any position by means of a nut, not shown. The scale can then be moved, either up or down, by means of the milled nut. A vernier V is fixed to the frame by two small screws passing through slot holes, which allow for a slight adjustment of the zero. At some point a few feet up-stream from the weir*, the frame can be fixed to a post, or better still to the side of a box from which a pipe runs into the stream. The level of the water in the box will thus be the same as the level in the stream. The exact level of the crest of the weir must be obtained by means of a level and a line marked on the box at the same height as the crest. The slider L can be moved, so that the hook point is nearly coincident with the mark, and the final adjustment made by means of the screw T. The vernier can be adjusted so that its zero is coincident with the zero of the scale, and the slider again raised until the hook approaches the surface of the water. By means of the screw, the hook is raised slowly, until, by piercing

* See section 82.

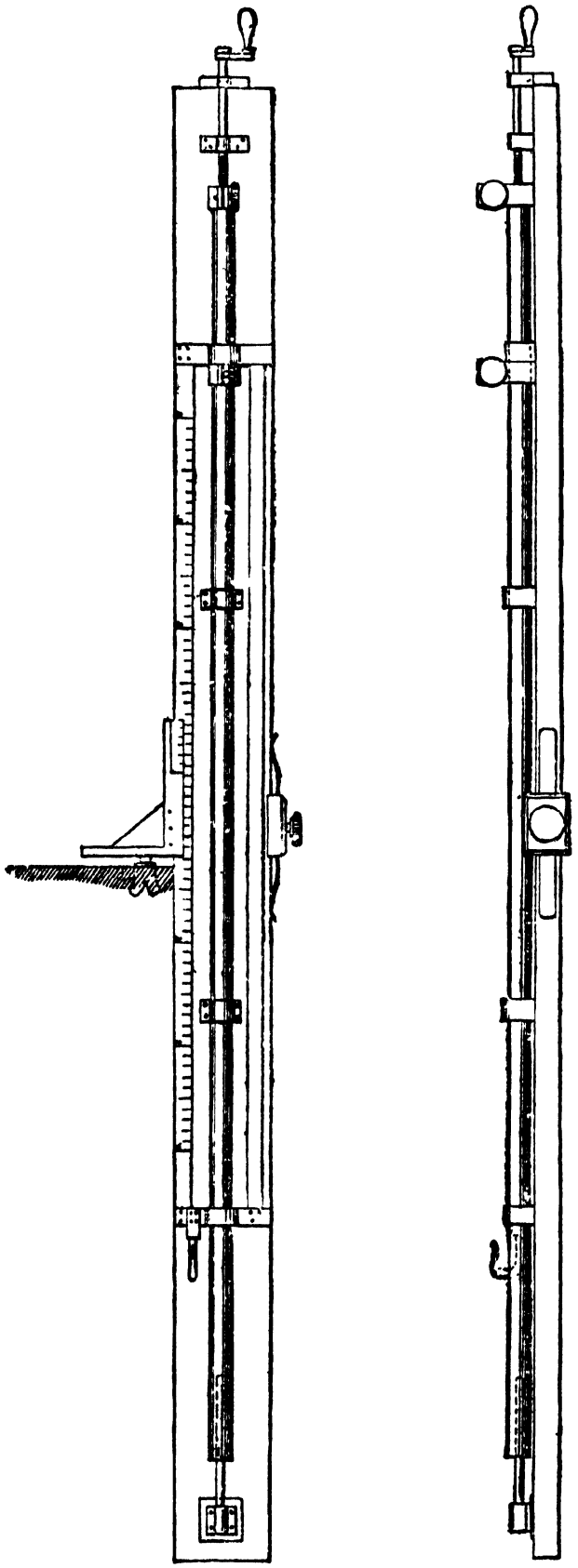

Fig. 152. Bazin's Hook Gauge.

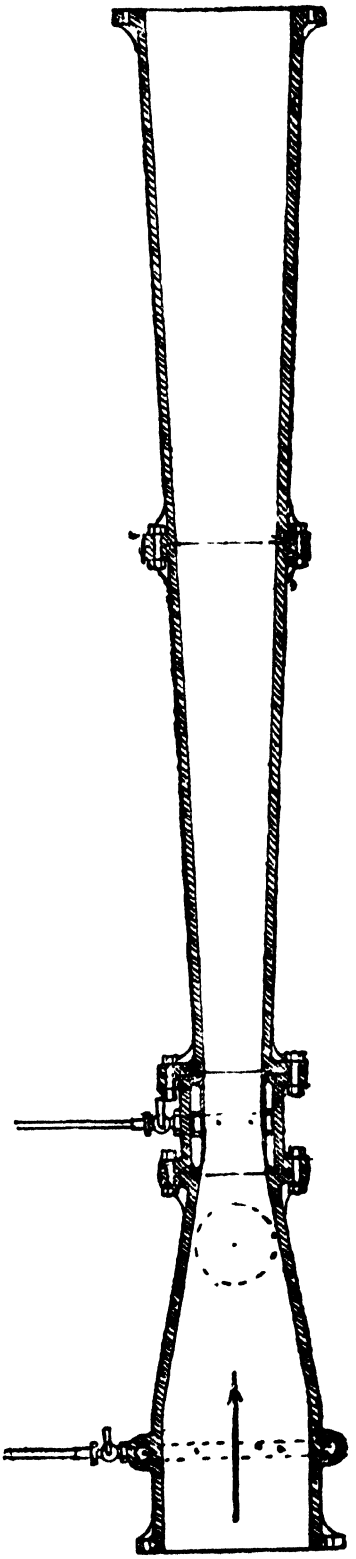

Fig. 153. Kent Venturi Meter.

the surface of the water, it causes a distortion of the light reflected from the surface. On moving the hook downwards again very slightly, the exact surface will be indicated when the distortion disappears.

A more elaborate hook gauge, as used by Bazin for his experimental work, is shown in Fig. 152.

For rough gaugings a post can be driven into the bed of the channel, a few feet above the weir, until the top of the post is level with the sill of the weir. The height of the water surface

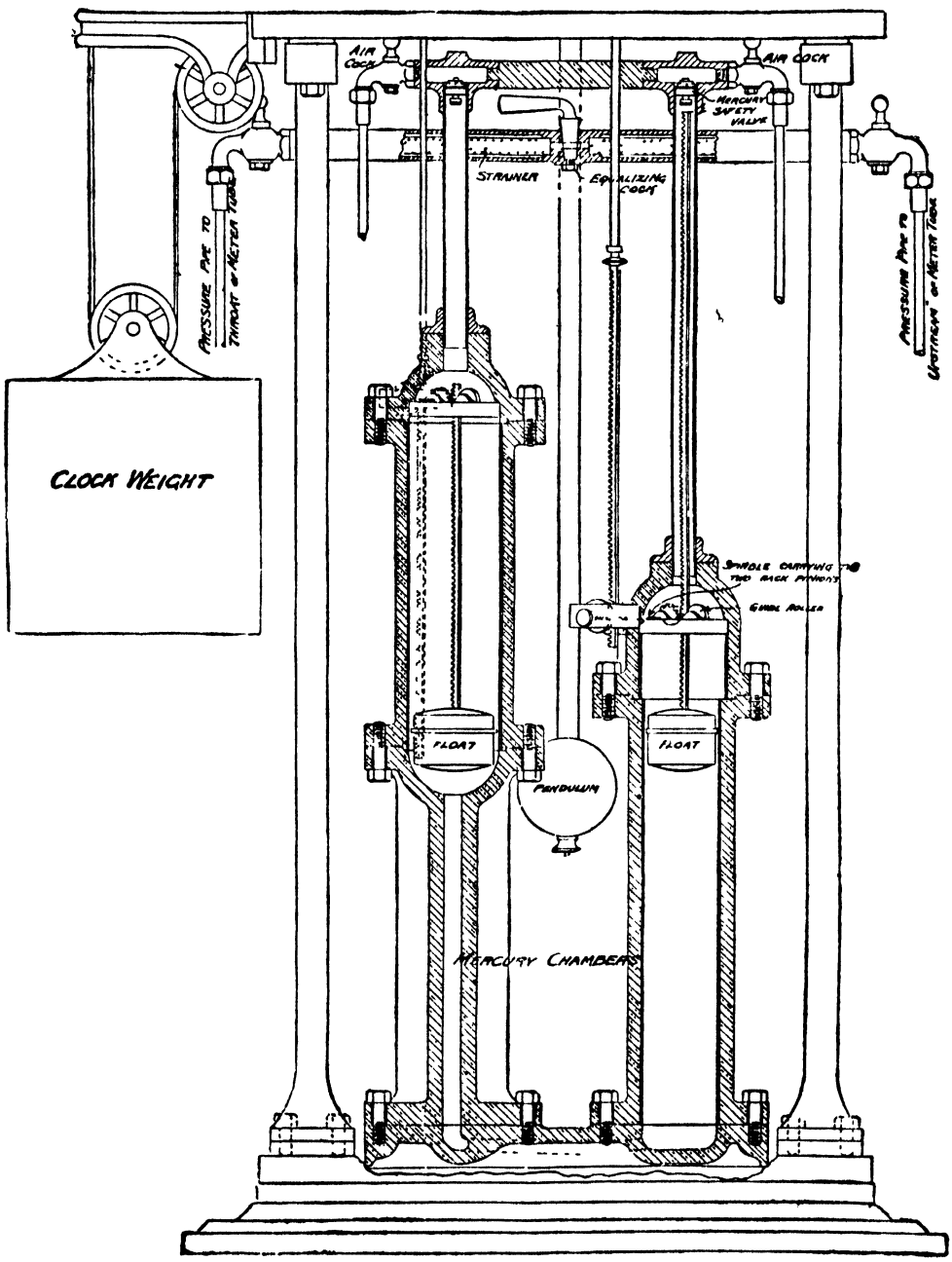

Fig. 154. Recording Apparatus Kent Venturi Meter.

above the top of the post can then be measured by any convenient scale.

154. Gauging the flow in pipes; Venturi meter.

Such methods as already described are inapplicable to the measurement of the flow in pipes, in which it is necessary that there shall be no discontinuity in the flow, and special meters have accordingly been devised.

For large pipes, the Venturi meter, Fig. 153, is largely used in America, and is coming into favour in this country.

The theory of the meter has already been discussed (p. 44), and it was shown that the discharge is proportional to the square root of the difference H of the head at the throat and the head in the pipe, or

$$Q = \frac{k \, . \, aa_1}{\sqrt{a_1^2 - a^2}} \sqrt{2gH},$$

k* being a coefficient.

For measuring the pressure heads at the two ends of the cone, Mr W. G. Kent uses the arrangement shown in Fig. 154.

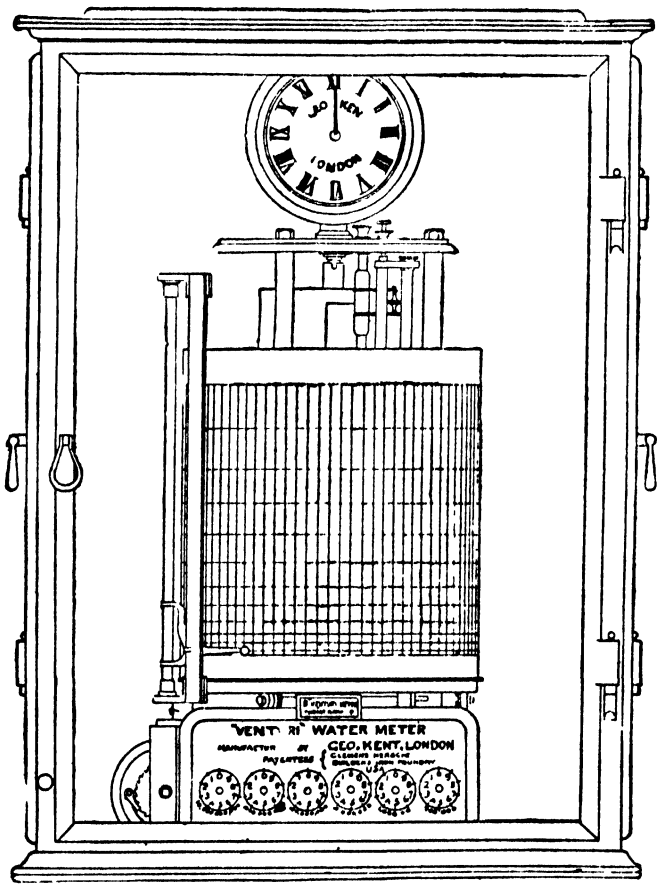

Fig. 155. Recording drum of the Kent Venturi Meter.

* See page 46.

The two pressure tubes from the meter are connected to a U tube consisting of two iron cylinders containing mercury. Upon the surface of the mercury in each cylinder is a float made of iron and vulcanite; these floats rise or fall with the surfaces of the mercury.

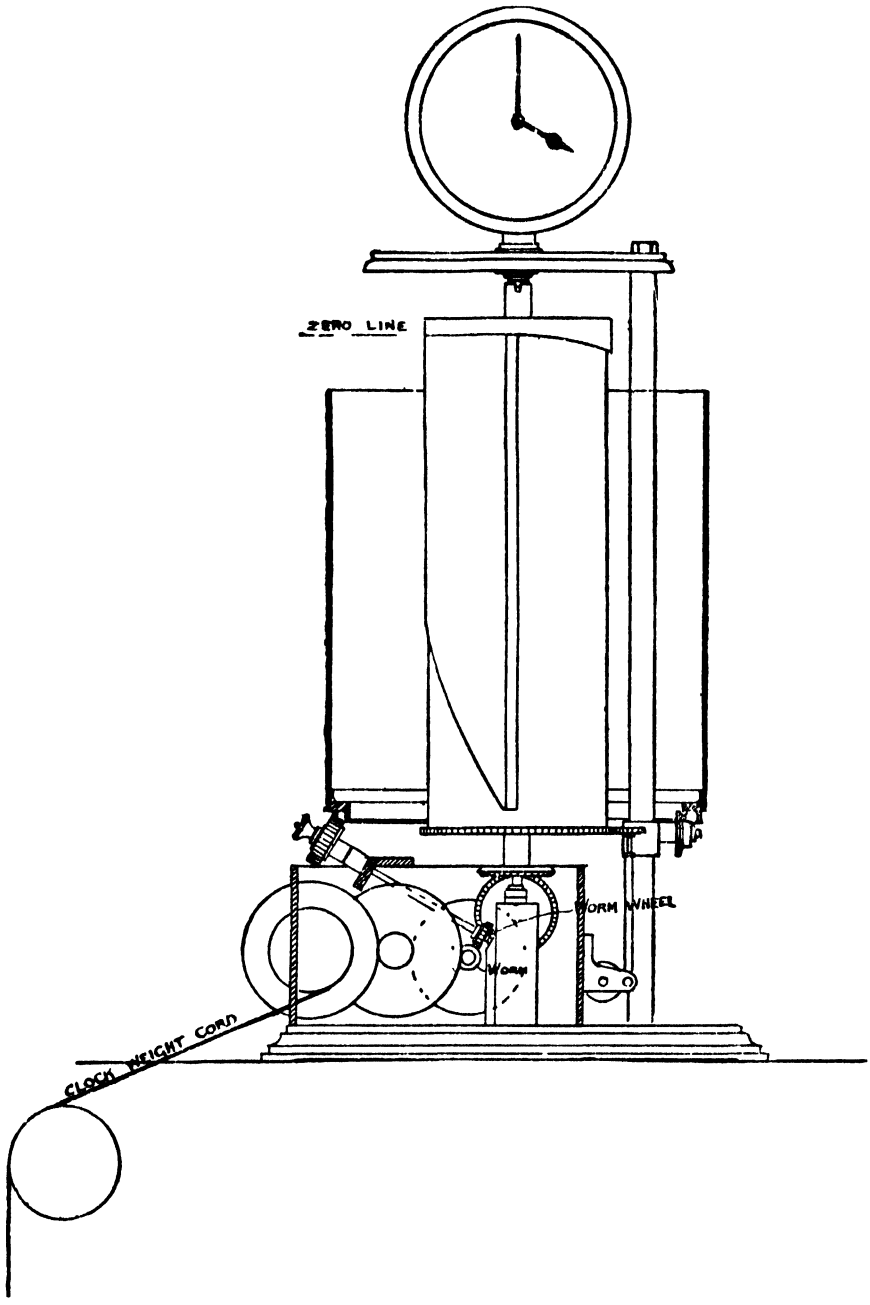

Fig. 156. Integrating drum of the Kent Venturi Meter.

When no water is passing through the meter, the mercury in the two cylinders stands at the same level. When flow takes place the mercury in the left cylinder rises, and that in the right cylinder is depressed until the difference of level of the surfaces

of the mercury is equal to $\frac{H}{s-1}$, s being the specific gravity of the mercury and H the difference of pressure head in the two cylinders. The two tubes are equal in diameter, so that the rise in the one is exactly equal to the fall in the other, and the movement of either rack is proportional to H. The discharge is proportional to $\sqrt{H}$, and arrangements are made in the recording apparatus to make the revolutions of the counter proportional to $\sqrt{H}$. To the floats, inside the cylinders, are connected racks, as shown in Fig. 154, gearing with small pinions. Outside the mercury cylinders are two other racks, to each of which vertical motion is given by a pinion fixed to the same spindle as the pinion gearing with the rack in the cylinder. The rack outside the left cylinder has connected to it a light pen carriage, the pen of which

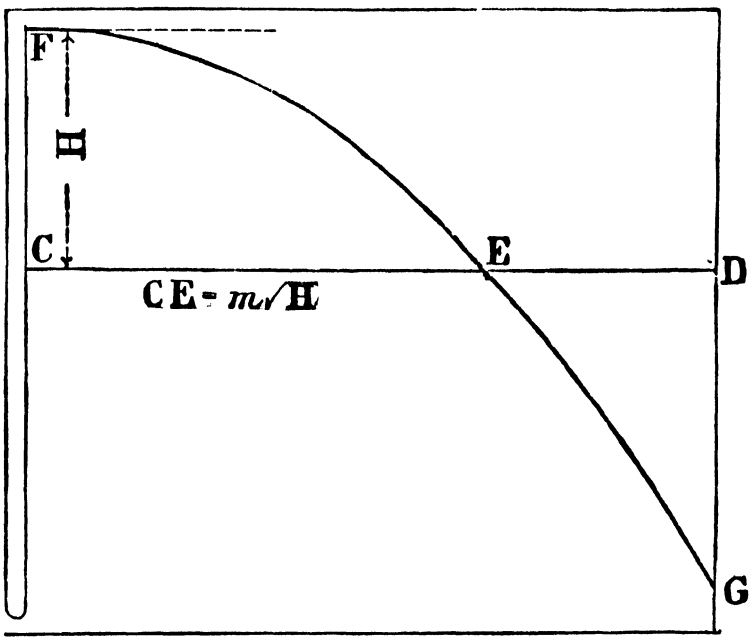

Fig. 157. Kent Venturi Meter. Development of Integrating drum.

makes a continuous record on the diagram drum shown in Fig. 155. This drum is rotated at a uniform rate by clockwork, and on suitably prepared paper a curve showing the rate of discharge at any instant is thus recorded. The rack outside the right cylinder is connected to a carriage, the function of which is to regulate the rotations of the counter which records the total flow. Concentric with the diagram drum shown in Fig. 155, and within it, is a second drum, shown in Fig. 156, which also rotates at a uniform rate. Fig. 157 shows this internal drum developed. The surface of the drum below the parabolic curve FEG is recessed. If the right-hand carriage is touching the drum on the recessed

portion, the counter gearing is in action, but is put out of action when the carriage touches the cylinder on the raised portion above FG. Suppose the mercury in the right cylinder to fall a height proportional to H, then the carriage will be in contact with the drum, as the drum rotates, along the line CD, but the recorder will only be in operation while the carriage is in contact along the length CE. Since FG is a parabolic curve the fraction of the circumference $CE = m \cdot \sqrt{H}$, m being a constant, and therefore for any displacement H of the floats the counter for each revolution of the drum will be in action for a period proportional to $\sqrt{H}$. When the float is at the top of the right cylinder, the carriage is at the top of the drum, and in contact with the raised portion for the whole of a revolution and no flow is registered. When the right float is in its lowest position the carriage is at the bottom of the drum, and flow is registered during the whole of a revolution. The recording apparatus can be placed at any convenient distance less than 1000 feet from the meter, the connecting tubes being made larger as the distance is increased.

155. Deacon's waste-water meter.

An ingenious and very simple meter designed by Mr G. F. Deacon principally for detecting the leakage of water from pipes is as shown in Fig. 158.

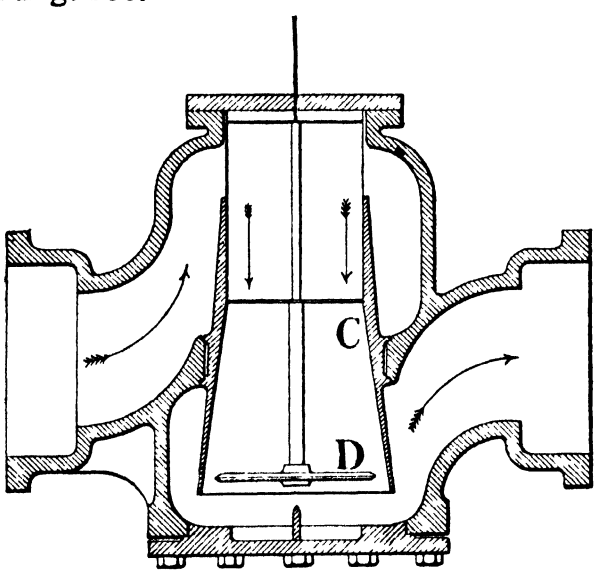

Fig. 158. Deacon waste-water meter.

The body of the meter which is made of cast-iron, has fitted into it a hollow cone C made of brass. A disc D of the same diameter as the upper end of the cone is suspended in this cone by means of a fine wire, which passes over a pulley not shown; the other end of the wire carries a balance weight.

When no water passes through the meter the disc is drawn to the top of the cone, but when water is drawn through, the disc is pressed downwards to a position depending upon the quantity of water passing. A pencil is attached to the wire, and the motion of the disc can then be recorded upon a drum made to revolve by clockwork. The position of the pencil indicates the rate of flow passing through the meter at any instant.

When used as a waste-water meter, it is placed in a by-pass leading from the main, as shown diagrammatically in Fig. 159.

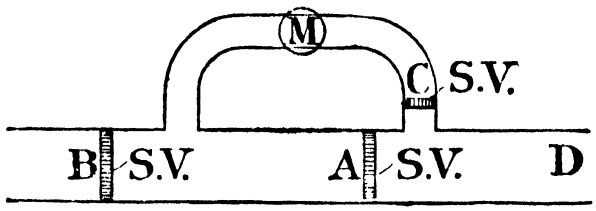

Fig 159.

The valve A is closed and the valve C opened. The rate of consumption in the pipe AD at those hours of the night when the actual consumption is very small, can thus be determined, and an estimate made as to the probable amount wasted.

If waste is taking place, a careful inspection of the district supplied by the main AD may then be made to detect where the waste is occurring.

156. Kennedy's meter.

This is a positive meter in which the volume of water passing through the meter is measured by the displacement of a piston working in the measuring cylinder.

The long hollow piston P, Fig. 160, fits loosely in the cylinder C_0, but is made water-tight by means of a cylindrical ring of rubber which rolls between the piston and the inside of the cylinder, the friction being thus reduced to a minimum. At each end of the cylinder is a rubber ring, which makes a water-tight joint when the piston is forced to either end of the cylinder, so that the rubber roller has only to make a joint while the piston is free to move.

The water enters the meter at A, Fig. 161*b*, and for the position shown of the regulating cock, it flows down the passage D and under the piston. The piston rises, and as it does so the rack R turns the pinion S, and thus the pinion *p* which is keyed to the same spindle as S. This spindle also carries loosely a weighted lever W, which is moved as the spindle revolves by either of two projecting fingers. As the piston continues to ascend, the weighted lever is moved by one of the fingers until its

centre of gravity passes the vertical position, when it suddenly falls on to a buffer, and in its motion moves the lever L, which turns the cock, Fig. 161 *b*, into a position at right angles to that

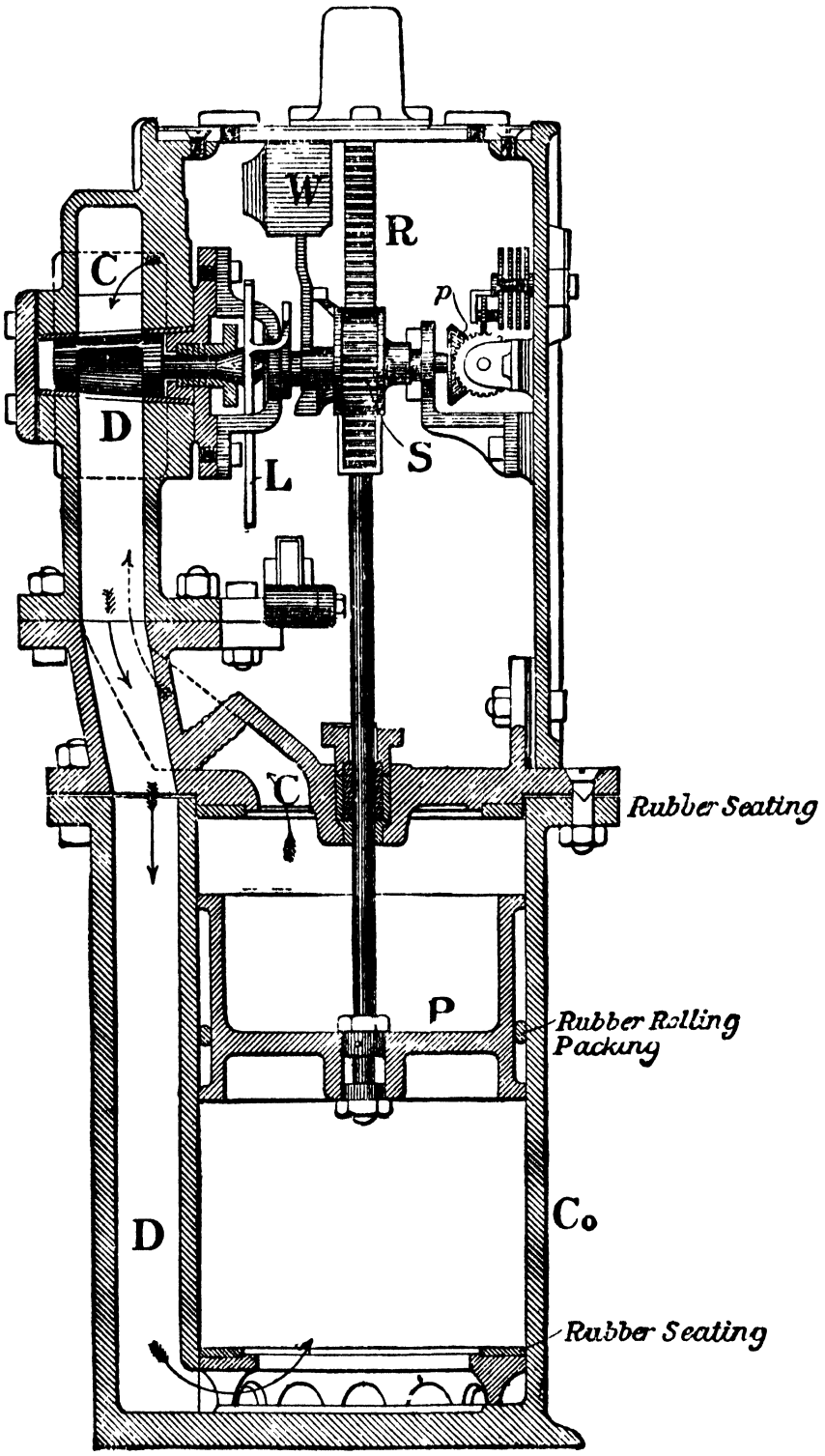

Fig. 160.

shown. The water now passes from A through the passage C, and thus to the top of the cylinder, and as the piston descends,

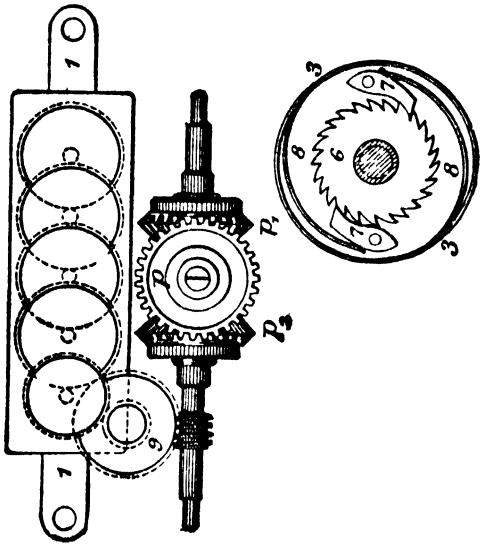

Fig. 161 *a*.

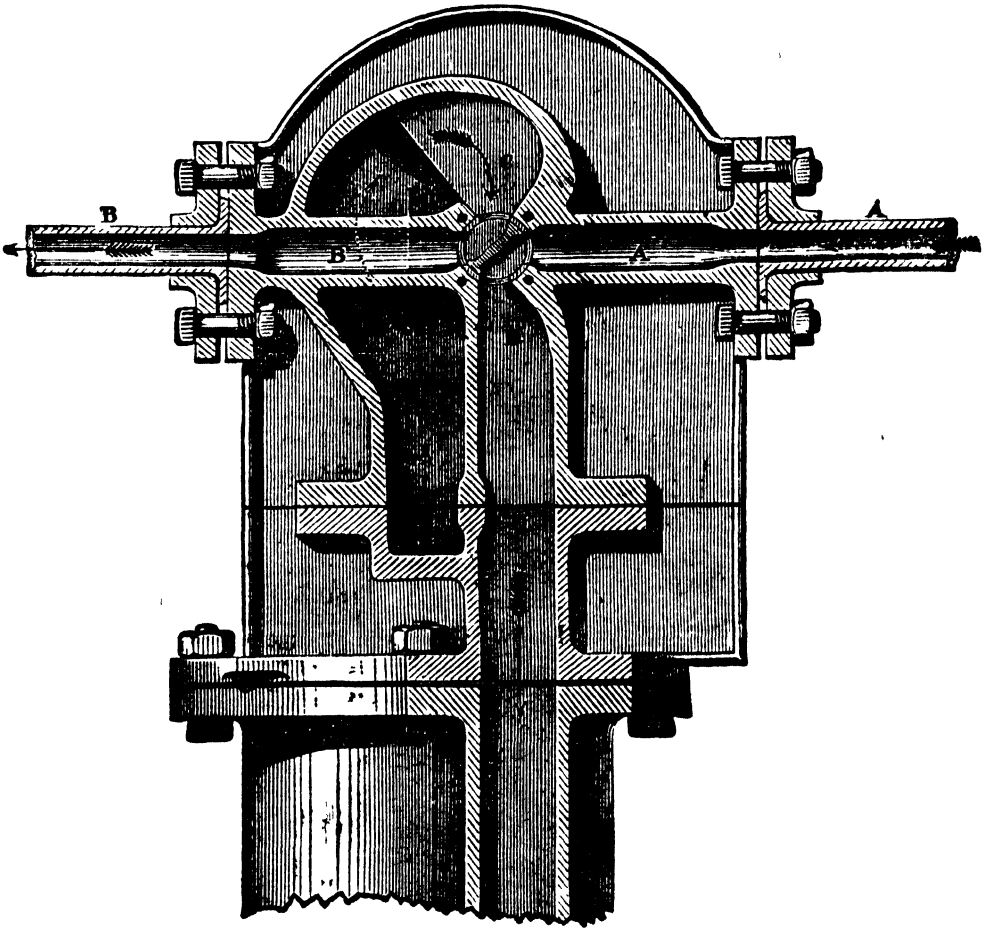

Fig. 161 *b*.

the water that is below it passes to the outlet B. The motion of the pinion S is now reversed, and the weight W lifted until it again reaches the vertical position, when it falls, bringing the cock C into the position shown in the figure, and another up

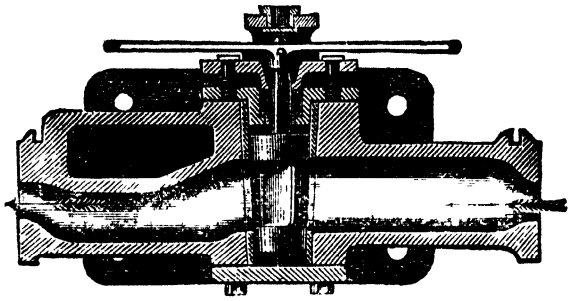

Fig. 161 *c*.

stroke is commenced. The oscillations of the pinion *p* are transferred to the counter mechanism through the pinions p_1 and p_2, Fig. 161 *a*, in each of which is a ratchet and pawl. The counter is thus rotated in the same direction whichever way the piston moves.

157. Gauging the flow of streams by chemical means.

Mr Stromeyer* has very successfully gauged the quantity of water supplied to boilers, and also the flow of streams by mixing with the stream during a definite time and at a uniform rate, a known quantity of a concentrated solution of some chemical, the presence of which in water, even in very small quantities, can be easily detected by some sensitive reagent. Suppose for instance water is flowing along a small stream. Two stations at a known distance apart are taken, and the time determined which it takes the water to traverse the distance between them. At a stated time, by means of a special apparatus—Mr Stromeyer uses the arrangement shown in Fig. 162—sulphuric acid, or a strong salt solution, say, of known strength, is run into the stream at a known

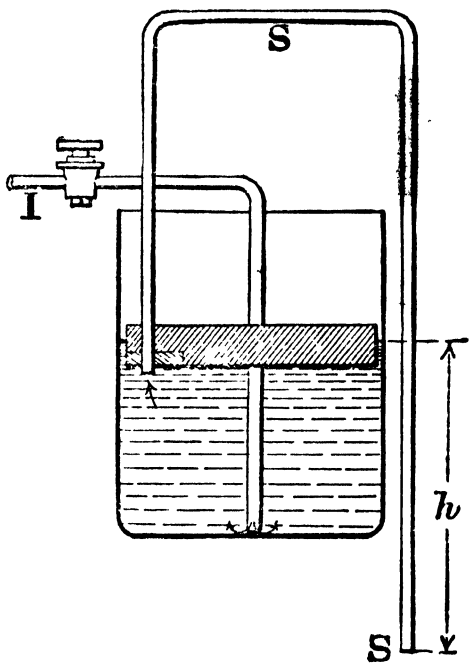

Fig. 162.

* *Transactions of Naval Architects*, 1896; *Proceedings Inst. C E.*, Vol. CLX. and "Jaugeages par Titrations" by Collet, Mellet and Lutschg. Swiss Bureau of Hydrography.

rate, at the upper station. While the acid is being put into the stream, a small distance up-stream from where the acid is introduced samples of water are taken at definite intervals. At the lower station sampling is commenced, at a time, after the insertion of the acid at the upper station is started, equal to that required by the water to traverse the distance between the stations, and samples are then taken, at the same intervals, as at the upper station. The quantity of acid in a known volume of the samples taken at the upper and lower station is then determined by analysis. In a volume V_0 of the samples, let the difference in the amount of sulphuric acid be equivalent to a volume v_0 of pure sulphuric acid. If in a time t, a volume V of water, has flowed down the stream, and there has been mixed with this a volume v of pure sulphuric acid, then, if the acid has mixed uniformly with the water, the ratio of the quantity of water flowing down the stream to the quantity of acid put into the stream, is the same as the ratio of the volume of the sample tested to the difference of the volume of the acid in the samples at the two stations, or

$$\frac{V}{v} = \frac{V_0}{v_0}.$$

Mr Stromeyer considers that the flow in the largest rivers can be determined by this method within one per cent. of its true value.

In large streams special precautions have to be taken in putting the chemical solution into the water, to ensure a uniform mixture, and also special precautions must be adopted in taking samples.

For other important information upon this interesting method of measuring the flow of water the reader is referred to the papers cited above.

An apparatus for accurately gauging the flow of the solution is shown in Fig. 162. The chemical solution is delivered into a cylindrical tank by means of a pipe I. On the surface of the solution floats a cork which carries a siphon pipe SS, and a balance weight to keep the cork horizontal. After the flow has been commenced, the head h above the orifice is clearly maintained constant, whatever the level of the surface of the solution in the tank.

EXAMPLES.

(1) Some observations are made by towing a current meter, with the following results:—

Speed in ft. per sec.	Revs. of meter per min.
1	80
5	560

Find an equation for the meter.

(2) Describe two methods of gauging a large river, from observations in vertical and horizontal planes; and state the nature of the results obtained.

If the cross section of a river is known, explain how the approximate discharge may be estimated by observation of the mid-surface velocity alone.

(3) The following observations of head and the corresponding discharge were made in connection with a weir 6·53 feet wide.

Head in feet	0·1	0·5	1·0	1·5	2·0	2·5	3·0	3·5	4·0
Discharge in cubic feet per sec. per foot width ...	0·17	1·2	3 35	6·1	9·32	13·03	17·03	21·54	26·4

Assuming the law connecting the head h with the discharge Q as

$$Q = mL \cdot h^n,$$

find m and n. (Plot logarithms of Q and h.)

(4) The following values of Q and h were obtained for a sharp-edge weir 6·53 feet long, without lateral contraction. Find the coefficient of discharge at various heads.

Head h ...	·1	·4	·6	·8	1·0	1·5	2·0	2·5	3·0	3·5	4·0	4·5	5·0	5·5	6·0
Q per foot-length ...	·17	·87	1·56	2·37	3·35	6·1	9·32	13·03	17·03	21·54	26·4	31·62	37·09	42·81	48·81

(5) The following values of the head over a weir 10 feet long were obtained at 5 minutes intervals.

Head in feet	·35	·36	·37	·37	·38	·39	·40	·41	·42	·40	·39	·41

Taking the coefficient of discharge C as 3·36, find the discharge in one hour.

(6) A Pitot tube was calibrated by moving it through still water in a tank, the tube being fixed to an arm which was made to revolve at constant speed about a fixed centre. The following were the velocities of the tube and the heads measured in inches of water.

Velocities ft. per sec.	1·432	1·738	2·275	2·713	3·235	3·873	4·983	5·584	6·142
Head in inches of water	·448	·663	1·02	1·69	2·07	2·88	5·40	6·97	8·51

Determine the coefficient of the tube.

For examples on Venturi meters see Chapter II.

CHAPTER VIII.

IMPACT OF WATER ON VANES.

158. Definition of a vector. A right line AB, considered as having not only length, but also direction, and sense, is said to be a vector*. The initial point A is said to be the origin.

It is important that the difference between sense and direction should be clearly recognised.

Suppose for example, from any point A, a line AB of definite length is drawn in a northerly direction, then the direction of the line is either from south to north or north to south, but the sense of the vector is definite, and is from A to B, that is from south to north.

The vector AB is equal in magnitude to the vector BA, but they are of opposite sign or,

$$AB = -BA.$$

The sense of the vector is indicated by an arrow, as on AB, Fig. 163.

Any quantity which has magnitude, direction, and sense, may be represented by a vector.

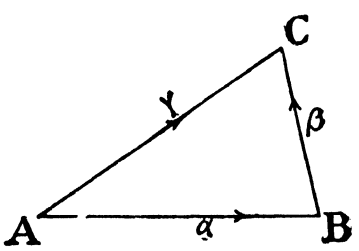

Fig. 163.

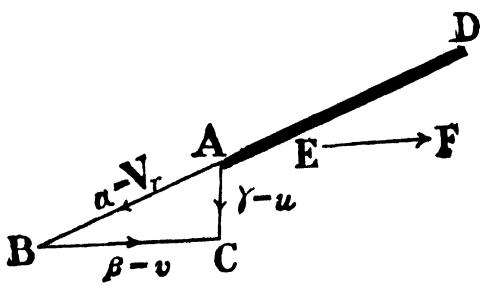

Fig. 164.

For example, a body is moving with a given velocity in a given direction, sense being now implied. Then a line AB drawn parallel to the direction of motion, and on some scale equal in

* Sir W. Hamilton, *Quaternions*.

length to the velocity of the body is the velocity vector; the sense is from A to B.

159. *Sum of two vectors.

If α and β, Fig. 163, are two vectors the sum of these vectors is found, by drawing the vectors, so that the beginning of β is at the end of α, and joining the beginning of α to the end of β. Thus γ is the vector sum of α and β.

160. Resultant of two velocities.

When a body has impressed upon it at any instant two velocities, the resultant velocity of the body in magnitude and direction is the vector sum of the two impressed velocities. This may be stated in a way that is more definitely applicable to the problems to be hereafter dealt with, as follows. If a body is moving with a given velocity in a given direction, and a second velocity is impressed upon the body, the resultant velocity is the vector sum of the initial and impressed velocities.

Example. Suppose a particle of water to be moving along a vane DA, Fig. 164, with a velocity V_r, relative to the vane.

If the vane is at rest, the particle will leave it at A with this velocity.

If the vane is made to move in the direction EF with a velocity v, and the particle has still a velocity V_r relative to the vane, and remains in contact with the vane until the point A is reached, the velocity of the water as it leaves the vane at A, will be the vector sum γ of α and β, *i.e.* of V_r and v, or is equal to u.

161. Difference of two vectors.

The difference of two vectors α and β is found by drawing both vectors from a common origin A, and joining the end of β to the end of α. Thus, CB, Fig. 165, is the difference of the two vectors α and β, or $\gamma = \alpha - \beta$, and BC is equal to $\beta - \alpha$, or $\beta - \alpha = -\gamma$.

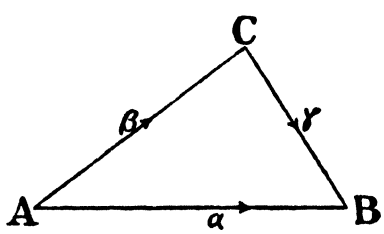

Fig. 165.

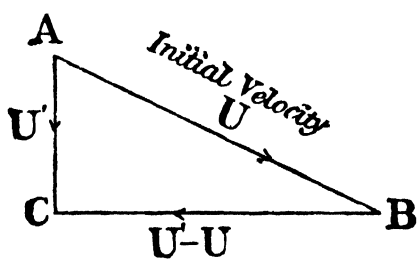

Fig. 166.

162. Absolute velocity.

By the terms "absolute velocity" or "velocity" without the adjective, as used in this chapter, it should be clearly understood, is meant the velocity of the moving water relative to the earth, or to the fixed part of any machine in which the water is moving.

* Henrici and Turner, *Vectors and Rotors.*

To avoid repetition of the word absolute, the adjective is frequently dropped and "velocity" only is used.

163. When a body is moving with a velocity U, Fig. 166, in any direction, and has its velocity changed to U′ in any other direction, by an impressed force, the change in velocity, or the velocity that is impressed on the body, is the vector difference of the final and the initial velocities. If AB is U, and AC, U′, the impressed velocity is BC.

By Newton's second law of motion, the resultant impressed force is in the direction of the change of velocity, and if W is the weight of the body in pounds and t is the time taken to change the velocity, the magnitude of the impressed force is

$$P = \frac{W}{gt} \text{ (change of velocity) lbs.}$$

This may be stated more generally as follows.

The rate of change of momentum, in any direction, is equal to the impressed force in that direction, or

$$P = \frac{W}{g} \cdot \frac{dv}{dt} \text{ lbs.}$$

In hydraulic machine problems, it is generally only necessary to consider the change of momentum of the mass of water that acts upon the machine per second. W in the above equation then becomes the weight of water per second, and t being one second,

$$P = \frac{W}{g} \text{ (change of velocity) lbs.}$$

164. Impulse of water on vanes.

It follows that when water strikes a vane which is either moving or at rest, and has its velocity changed, either in magnitude or direction, pressure is exerted on the vane.

As an example, suppose in one second a mass of water, weighing W lbs. and moving with a velocity U feet per second, strikes a fixed vane AD, and let it glide upon the vane at A, Fig. 167, and leave at D in a direction at right angles to its original direction of motion. The velocity of the water is altered in direction but not in magnitude, the original velocity being changed to a velocity at right angles to it by the impressed force the vane exerts upon the water.

The change of velocity in the direction AC is, therefore, equal to U, and the change of momentum per second is $\frac{W}{g} \cdot U$ foot lbs.

Since W lbs. of water strike the vane per second, the pressure P, acting in the direction CA, required to hold the vane in position is, therefore,

$$P = \frac{W}{g} . U.$$

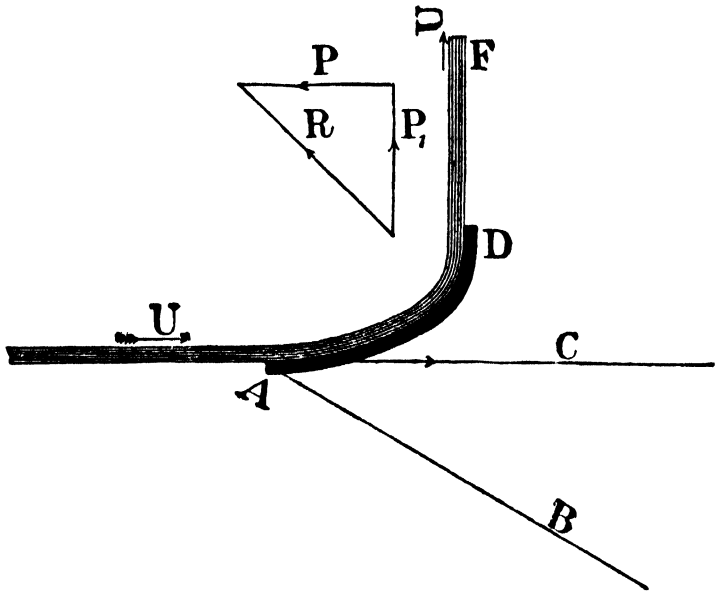

Fig. 167.

Again, the vane has impressed upon the water a velocity U in the direction DF which it originally did not possess.

The pressure P_1 in the direction DF is, therefore,

$$P_1 = P = \frac{W}{g} . U.$$

The resultant reaction of the vane in magnitude and direction is, therefore, R the resultant of P and P_1.

This resultant force could have been found at once by finding the resultant change in velocity. Set out *ac*, Fig. 168, equal to the initial velocity in magnitude and direction, and *ad* equal to the final velocity. The change in velocity is the vector difference *cd*, or *cd* is the velocity that must be impressed on a particle of water to change its velocity from *ac* to *ad*.

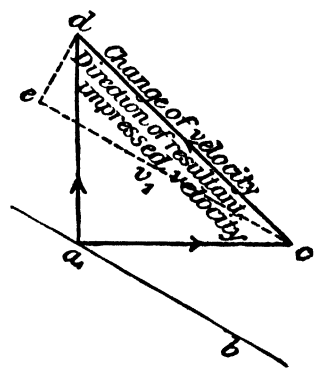

Fig. 168.

The impressed velocity *cd* is $V = \sqrt{U^2 + U^2}$, and the total impressed force is

$$R = \frac{W}{g} V = \frac{W}{g}\sqrt{U^2 + U^2} = \frac{\sqrt{2}W}{g} . U = \sqrt{2}P.$$

It at once follows, that if a jet of water strikes a fixed plane perpendicularly, with a velocity U, and glides along the plane, the normal pressure on the plane is $\frac{W}{g}U$.

Example. A stream of water 1 sq. foot in section and having a velocity of 10 feet per second glides on to a fixed vane in a direction making an angle of 30 degrees with a given direction AB.

The vane turns the jet through an angle of 90 degrees.

Find the pressure on the vane in the direction parallel to AB and the resultant pressure on the vane.

In Fig. 167, AC is the original direction of the jet and DF the final direction. The vane simply changes the direction of the water, the final velocity being equal to the initial velocity.

The vector triangle is *acd*, Fig. 168, *ac* and *ad* being equal.

The change of velocity in magnitude and direction is *cd*, the vector difference of *ad* and *ac*; resolving *cd* parallel to, and perpendicular to AB, *ce* is the change of velocity parallel to AB.

Scaling off *ce* and calling it v_1, the force to be applied along BA to keep the vane at rest is,

$$P_{BA}=\frac{W}{g}\cdot v_1.$$

But $$cd=\sqrt{2}.10$$

and $$ce=cd\cos 15^\circ$$

$$=\sqrt{2}.10\ \ 0\ 9659;$$

therefore, $$P_{BA}=\frac{10\times 62\ 4}{32\ 2}\times 13{\cdot}65$$

$$=264 \text{ lbs.}$$

The pressure normal to AB is

$$P_n=\frac{W}{g}.de$$

$$=\frac{W}{g}\sqrt{2}.10\sin 15^\circ=72 \text{ lbs.}$$

The resultant is $$R=\frac{10.62{\cdot}4}{32{\cdot}2}cd=\frac{100\sqrt{2}.62\ 4}{32{\cdot}2}=274 \text{ lbs.}$$

165. Relative velocity.

Before going on to the consideration of moving vanes it is important that the student should have clear ideas as to what is meant by relative velocity.

A train is said to have a velocity of sixty miles an hour when, if it continued in a straight line at a constant velocity for one hour, it would travel sixty miles. What is meant is that the train is moving at sixty miles an hour relative to the earth.

If two trains run on parallel lines in the same direction, one at sixty and the other at forty miles an hour, they have a relative velocity to each other of 20 miles an hour. If they move in opposite directions, they have a relative velocity of 100 miles an hour. If one of the trains T is travelling in the direction AB, Fig. 169, and the other T_1 in the direction AC, and it be supposed that the lines on which they are travelling cross each other at A,

and the trains are at any instant over each other at A, at the end of one minute the two trains will be at B and C respectively, at distances of one mile and two-thirds of a mile from A. Relatively to the train T moving along AB, the train T_1 moving along AC has, therefore, a velocity equal to BC, in magnitude and direction, and relatively to the train T_1 the train T has a velocity equal to CB. But AB and AC may be taken as the vectors of the two velocities, and BC is the vector difference of AC and AB, that is, the velocity of T_1 relative to T is the vector difference of AC and AB.

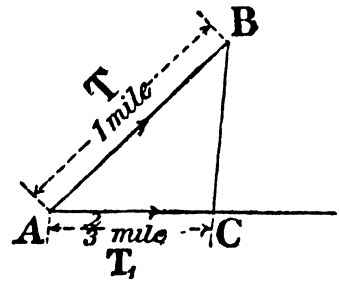

Fig. 169.

166. Definition of relative velocity as a vector.

If two bodies A and B are moving with given velocities v and v_1 in given directions, the relative velocity of A to B is the vector difference of the velocities v and v_1.

Thus when a stream of water strikes a moving vane the magnitude and direction of the relative velocity of the water and the vane is the vector difference of the velocity of the water and the edge of the vane where the water meets it.

167. To find the pressure on a moving vane, and the rate of doing work.

A jet of water having a velocity U strikes a flat vane, the plane of which is perpendicular to the direction of the jet, and which is moving in the same direction as the jet with a velocity v.

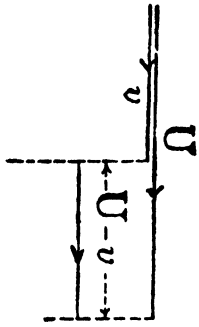

Fig. 170.

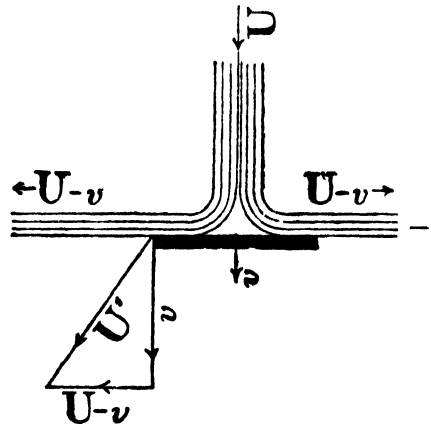

Fig. 171.

The relative velocity of the water and the vane is $U-v$, the vector difference of U and v, Fig. 170. If the water as it strikes the vane is supposed to glide along it as in Fig. 171, it will do

so with a velocity equal to $(U-v)$, and as it moves with the vane it will still have a velocity v in the direction of motion of the vane. Instead of the water gliding along the vane, the velocity $U-v$ may be destroyed by eddy motions, but the water will still have a velocity v in the direction of the vane. The change in velocity in the direction of motion is, therefore, the relative velocity $U-v$, Fig. 170.

For every pound of water striking the vane, the horizontal change in momentum is $\frac{U-v}{g}$, and this equals the normal pressure P on the vane, per pound of water striking the vane.

The work done per second per pound is

$$Pv = \frac{U-v}{g} . v \text{ foot lbs.}$$

The original kinetic energy of the jet per pound of water striking the vane is $\frac{U^2}{2g}$, and the efficiency of the vane is, therefore,

$$e = \frac{2v(U-v)}{U^2},$$

which is a maximum when v is $\frac{1}{2}U$, and $e = \frac{1}{2}$. An application of such vanes is illustrated in Fig. 185, page 292.

Nozzle and single vane. Let the water striking a vane issue from a nozzle of area a, and suppose that there is only one vane.

Let the vane at a given instant be supposed at A, Fig. 172. At the end of one second the front of the jet, if perfectly free to move, would have arrived at B and the vane at C. Of the water that has issued from the jet, therefore, only the quantity BC will have hit the vane.

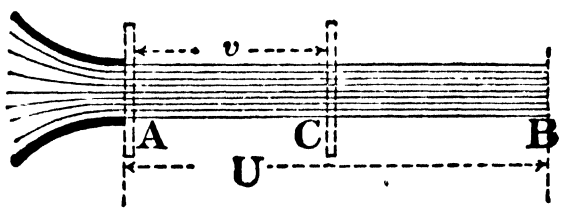

Fig. 172.

The discharge from the nozzle is

$$W = 62{\cdot}4 . a . U \text{ lbs.},$$

and the weight that hits the vane per second is

$$\frac{W . (U-v)}{U} \text{ lbs.}$$

The change of momentum per second is

$$\frac{W}{g} \frac{(U-v)^2}{U} \text{ foot lbs.},$$

and the work done is, therefore,

$$\frac{W(U-v)^2 v}{U.g}.$$

Or the work done per lb. of water issuing from the nozzle is

$$\frac{v(U-v)^2}{U.g}.$$

This is purely a hypothetical case and has no practical importance.

Nozzle and a number of vanes. If there are a number of vanes closely following each other, the whole of the water issuing from the nozzle hits the vanes, and the work done is

$$\frac{W(U-v)v}{g}.$$

The efficiency is

$$\frac{2v(U-v)}{U^2},$$

and the maximum efficiency is $\frac{1}{2}$.

It follows that an impulse water wheel, with radial blades, as in Fig. 185, cannot have an efficiency of more than 50 per cent.

168. Impact of water on a vane when the directions of motion of the vane and jet are not parallel.

Let U be the velocity of a jet of water and AB its direction, Fig. 173.

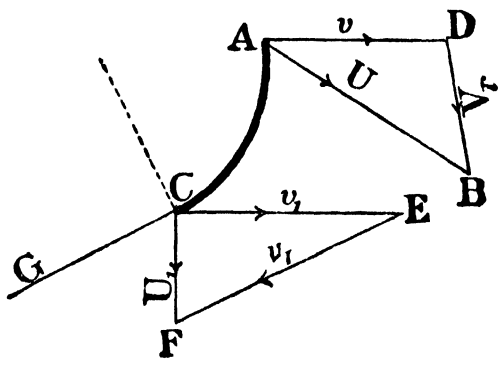

Fig. 173.

Let the edge A of the vane AC be moving with a velocity v; the relative velocity V_r of the water and the vane at A is DB. From the triangle DAB it is seen that, the vector sum of the velocity of the vane and the relative velocity of the jet and the vane is equal to the velocity of the jet; for clearly U is the vector sum of v and V_r.

If the direction of the tip of the vane at A is made parallel to DB the water will glide on to the vane in exactly the same way

as if it were at rest, and the water were moving in the direction DB. This is the condition that no energy shall be lost by shock.

When the water leaves the vane, the relative velocity of the water and the vane must be parallel to the direction of the tangent to the vane at the point where it leaves, and it is equal to the vector difference of the absolute velocity of the water, and the vane. Or the absolute velocity with which the water leaves the vane is the vector sum of the velocity of the tip of the vane and the relative velocity of the water to the vane.

Let CG be the direction of the tangent to the vane at C. Let CE be v_1, the velocity of C in magnitude and direction, and let CF be the absolute velocity U_1 with which the water leaves the vane.

Draw EF parallel to CG to meet the direction CF in F, then the relative velocity of the water and the vane is EF, and the velocity with which the water leaves the vane is equal to CF.

If v_1 and the direction CG are given, and the direction in which the water leaves the vane is given, the triangle CEF can be drawn, and CF determined.

If on the other hand v_1 is given, and the relative velocity v_r is given in magnitude and direction, CF can be found by measuring off along EF the known relative velocity v_r and joining CF.

If v_1 and U_1 are given, the direction of the tangent to the vane is then, as at inlet, the vector difference of U_1 and v_1.

It will be seen that when the water either strikes or leaves the vane, the relative velocity of the water and the vane is the vector difference of the velocity of the water and the vane, and the actual velocity of the water as it leaves the vane is the vector sum of the velocity of the vane and the relative velocity of the water and the vane.

Example. The direction of the tip of the vane at the outer circumference of a wheel fitted with vanes, makes an angle of 165 degrees with the direction of motion of the tip of the vane.

The velocity of the tip at the outer circumference is 82 feet per second.

The water leaves the wheel in such a direction and with such a velocity that the radial component is 13 feet per second.

Find the absolute velocity of the water in direction and magnitude and the relative velocity of the water and the wheel.

To draw the triangle of velocities, set out AB equal to 82 feet, and make the angle ABC equal to 15 degrees. BC is then parallel to the tip of the vane.

Draw EC parallel to AB, and at a distance from it equal to 13 feet and intersecting BC in C.

Then AC is the vector sum of AB and BC, and is the absolute velocity of the water in direction and magnitude.

Expressed trigonometrically

$$AC^2 = (82 - 13 \cot 15^\circ)^2 + 13^2$$
$$= 33{\cdot}5^2 + 13^2 \text{ and } AC = 36{\cdot}7 \text{ ft. per sec.}$$

$$\sin BAC = \frac{13}{AC} = {\cdot}354.$$

Therefore $BAC = 20^\circ\, 45'$.

169. Conditions which the vanes of hydraulic machines should satisfy.

In all properly designed hydraulic machines, such as turbines, water wheels, and centrifugal pumps, in which water flowing in a definite direction impinges on moving vanes, the relative velocity of the water and the vanes should be parallel to the direction of the vanes at the point of contact. If not, the water breaks into eddies as it moves on to the vanes and energy is lost.

Again, if in such machines the water is required to leave the vanes with a given velocity in magnitude and direction, it is only necessary to make the tip of the vane parallel to the vector difference of the given velocity with which the water is to leave the vane and the velocity of the tip of the vane.

Example (1). A jet of water, Fig. 174, moves in a direction AB making an angle of 30 degrees with the direction of motion AC of a vane moving in the atmosphere. The jet has a velocity of 30 ft. per second and the vane of 15 ft. per second. To find (*a*) the direction of the vane at A so that the water may enter without shock; (*b*) the direction of the tangent to the vane where the water leaves it, so that the absolute velocity of the water when it leaves the vane is in a direction perpendicular to AC; (*c*) the pressure on the vane and the work done per second per pound of water striking the vane. Friction is neglected.

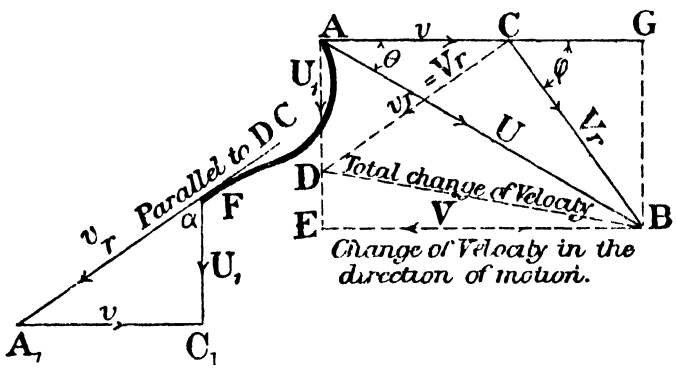

Fig. 174.

The relative velocity V_r of the water and the vane at A is CB, and for no shock the vane at A must be parallel to CB.

Since there is no friction, the relative velocity V_r of the water and the vane cannot alter, and therefore, the triangle of velocities at exit is ACD or FA_1C_1.

The point D is found, by taking C as centre and CB as radius and striking the arc BD to cut the known direction AD in D.

The total change of velocity of the jet is the vector difference DB of the initial and final velocities, and the change of velocity in the direction of motion is BE. Calling this velocity V, the pressure exerted upon the vane in the direction of motion is

$$\frac{V}{g} \text{ lbs. per lb. of water striking the vane.}$$

The work done per lb. is, therefore, $\frac{Vv}{g}$ ft. lbs. and the efficiency, since there is no loss by friction, or shock, is

$$\frac{Vv}{g\,\frac{U^2}{2g}} = \frac{2Vv}{U^2}.$$

The change in the kinetic energy of the jet is equal to the work done by the jet. The kinetic energy per lb. of the original jet is $\frac{U^2}{2g}$ and the final kinetic energy is $\frac{U_1^2}{2g}$.

The work done is, therefore, $\frac{U^2}{2g} - \frac{U_1^2}{2g}$ ft. lbs. and the efficiency is

$$\frac{\frac{U^2}{2g} - \frac{U_1^2}{2g}}{\frac{U^2}{2g}} = 1 - \frac{U_1^2}{U^2}.$$

It can at once be seen from the geometry of the figure that

$$\frac{Vv}{g} = \frac{U^2}{2g} - \frac{U_1^2}{2g}.$$

For $$AB^2 = AC^2 + CB^2 + 2AC \,.\, CG,$$

and since $$CD = CB \text{ and } CD^2 = AC^2 + AD^2,$$

therefore, $$AB^2 - AD^2 = 2AC\,(AC + CG)$$
$$= 2vV.$$

But $$AB^2 - AD^2 = U^2 - U_1^2,$$

therefore, $$\frac{U^2 - U_1^2}{2g} = \frac{vV}{g}.$$

If the water instead of leaving the vane in a direction perpendicular to v, leaves it with a velocity U_1 having a component V_1 parallel to v, the work done on the vane per pound of water is

$$\frac{(V - V_1)\,v}{g} \text{ ft. lbs.}$$

If U_1 be drawn on the figure it will be seen that the change of velocity in the direction of motion is now $(V - V_1)$, the impressed force per pound is $\frac{V - V_1}{g}$, and the work done is, therefore, $\left(\frac{V - V_1}{g}\right) v$ ft. lbs. per pound.

As before, the work done on the vane is the loss of kinetic energy of the jet, and therefore,

$$\frac{(V - V_1)\,v}{g} = \frac{U^2 - U_1^2}{2g}.$$

The work done on the vane per pound of water for any given value of U_1, is, therefore, independent of the direction of U_1.

Example (2). A series of vanes such as AB, Fig. 175, are fixed to a (turbine) wheel which revolves about a fixed centre C, with an angular velocity ω.

The radius of B is R and of A, r. Within the wheel are a number of guide passages, through which water is directed with a velocity U, at a definite inclination θ with the tangent to the wheel. The air is supposed to have free access to the wheel.

To draw the triangles of velocity, at inlet and outlet, and to find the directions of the tips of the vanes, so that the water moves on to the vanes without shock and leaves the wheel with a given velocity U_1. Friction neglected.

In this case the velocity relative to the vanes is altered by the whirling of the water as it moves over the vanes. It will be shown later that the head impressed is $\frac{v_1^2}{2g} - \frac{v^2}{2g}$. Then $\frac{v_r^2}{2g} = \frac{V_r^2}{2g} + \frac{v_1^2}{2g} - \frac{v^2}{2g}$.

The tangent AH to the vane at A makes an angle ϕ with the tangent AD to the wheel, so that FD makes an angle ϕ with AD. The triangle of velocities AFD at inlet is, therefore, as shown in the figure and does not need explanation.

To draw the triangle of velocities at exit, set out BG equal to v_1 and perpen-

dicular to the radius BC, and with B and G as centres, describe circles with U_1 and v_r as radii respectively, intersecting in E. Then GE is parallel to the tangent to the vane at B.

(See Impulse turbines.)

Work done on the wheel. Neglecting friction etc the work done per pound of water passing through the wheel, since the pressure is constant, being equal to the atmospheric pressure, is the loss of kinetic energy of the water, and is

$$\frac{U^2}{2g} - \frac{U_1^2}{2g} \text{ ft. lbs.}$$

The work done on the wheel can also be found from the consideration of the change of the angular momentum of the water passing through the wheel. Before going on however to determine the work per pound by this method, the notation that has been used is summarised and several important principles considered.

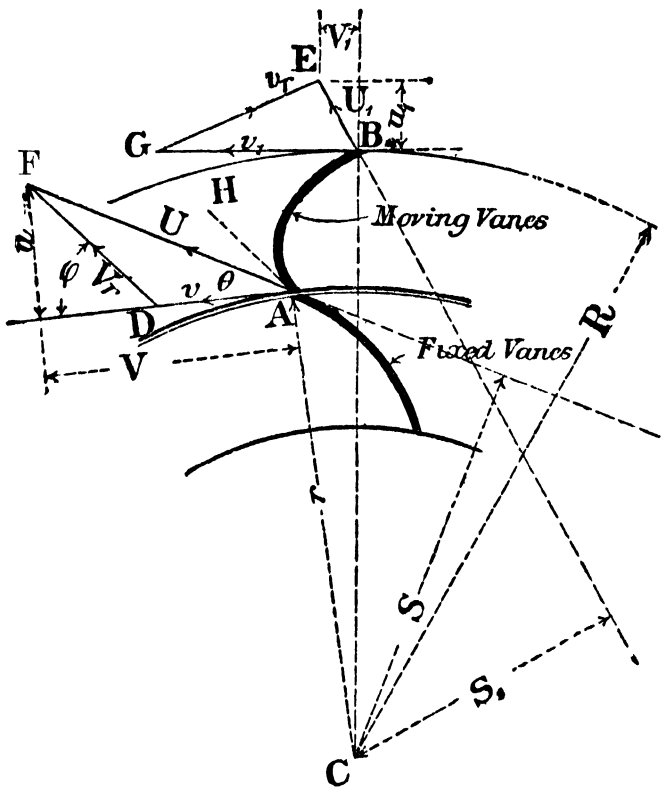

Fig. 175

Notation used in connection with vanes, turbines and centrifugal pumps. Let U be the velocity with which the water approaches the vane, Fig. 175, and v the velocity, perpendicular to the radius AC, of the edge A of the vane at which water enters the wheel.

Let V be the component of U in the direction of v,

u the component of U perpendicular to v,

V_r the relative velocity of the water and vane at A,

v_1 the velocity, perpendicular to BC, of the edge B of the vane at which water leaves the wheel,

U_1 the velocity with which the water leaves the wheel,

V_1 the component of U_1 in the direction of v_1,

u_1 the component of U_1 perpendicular to v_1, or along BC,
v_r the relative velocity of the water and the vane at B.

Velocities of whirl. The component velocities V and V_1 are called the velocities of whirl at inlet and outlet respectively. This term will frequently be used in the following chapters.

170. Definition of angular momentum.

If a weight of W pounds is moving with a velocity U, Figs. 175 and 176, in a given direction, the perpendicular distance of which is S feet from a fixed centre C, the angular momentum of W is

$$\frac{W}{g} . U . S \text{ pounds feet.}$$

171. Change of angular momentum.

If after a small time t the mass is moving with a velocity U_1 in a direction, which is at a perpendicular distance S_1 from C, the angular momentum is now $\frac{W}{g} U_1 S_1$; the change of angular momentum in time t is

$$\frac{W}{g} (US - U_1 S_1);$$

and the rate of change of angular momentum is

$$\frac{W}{gt} (US - U_1 S_1).$$

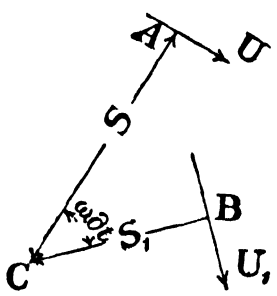

Fig. 176.

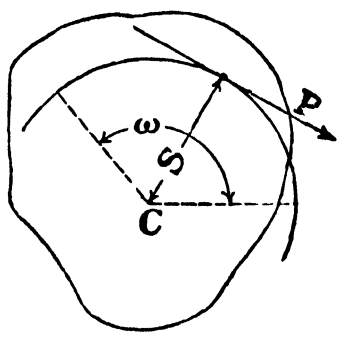

Fig. 177.

172. Two important principles.

(1) *Work done by a couple, or turning moment.* When a body is turned through an angle α measured in radians, under the action of a constant turning moment, or couple, of T pounds feet, the work done is $T\alpha$ foot pounds.

If the body is rotating with an angular velocity ω radians per second, the rate of doing work is $T\omega$ foot pounds per second, and the horse-power is $\frac{T\omega}{550}$.

Suppose a body rotates about a fixed centre C, Fig. 177, and a force P lbs. acts on the body, the perpendicular distance from C to the direction of P being S.

The moment of P about C is

$$T = P.S.$$

If the body turns through an angle ω in one second, the distance moved through by the force P is $\omega.S$, and the work done by P in foot pounds is

$$P\omega S = T\omega.$$

And since one horse-power is equivalent to 33,000 foot pounds per minute or 550 foot pounds per second the horse-power is

$$HP = \frac{T\omega}{550}.$$

(2) *The rate of change of angular momentum of a body rotating about a fixed centre is equal to the couple acting upon the body.* Suppose a weight of W pounds is moving at any instant with a velocity U, Fig. 176, the perpendicular distance of which from a fixed centre C is S, and that forces are exerted upon W so as to change its velocity from U to U_1 in magnitude and direction.

The reader may be helped by assuming the velocity U is changed to U_1 by a wheel such as that shown in Fig. 175.

Suppose now at the point A the velocity U is destroyed in a time ∂t, then a force will be exerted at the point A equal to

$$P = \frac{W}{g} \cdot \frac{U}{\partial t},$$

and the moment of this force about C is P.S.

At the end of the time ∂t, let the weight W leave the wheel with a velocity U_1. During this time ∂t the velocity U_1 might have been given to the moving body by a force

$$P_1 = \frac{W}{g} \frac{U_1}{\partial t}$$

acting at the radius S_1.

The moment of P_1 is P_1S_1; and therefore if the body has been acting on a wheel, Fig. 175, the reaction of the wheel causing the velocity of W to change, the couple acting on the wheel is

$$T = \frac{W}{g\partial t}(US - U_1S_1) \text{.....} (1).$$

When US is greater than U_1S_1, the body has done work on the wheel, as in water wheels and turbines. When U_1S_1 is greater than US, the wheel does work on the body as in centrifugal pumps.

Let the wheel of Fig. 175 have an angular velocity ω.

In a time ∂t the angle moved through by the couple is $\omega\partial t$, and therefore the work done in time ∂t is

$$T.\omega\partial t = \frac{W}{g}\omega\,(US - U_1S_1) \quad \text{.....(2).}$$

Suppose now W is the weight of water in pounds per second which strikes the vanes of a moving wheel of any form, and this water has its velocity changed from U to U_1, then by making ∂t in either equation (1) or (2) equal to unity, the work done per second is

$$T\omega = \frac{W}{g}\omega\,(US - U_1S_1),$$

and the work done per second per pound of water entering the wheel is

$$\frac{\omega}{g}(US - U_1S_1).$$

This result, as will be seen later (page 337), is entirely independent of the change of pressure as the water passes through the wheel, or of the direction in which the water passes.

173. Work done on a series of vanes fixed to a wheel expressed in terms of the velocities of whirl of the water entering and leaving the wheel.

Outward flow turbine. If water enters a wheel at the inner circumference, as in Fig. 175, the flow is said to be outward. On reference to the figure it is seen that since r is perpendicular to V, and S to U, therefore

$$\frac{r}{S} = \frac{U}{V},$$

and for a similar reason

$$\frac{R}{S_1} = \frac{U_1}{V_1}.$$

Again the angular velocity of the wheel

$$\omega = \frac{v}{r} = \frac{v_1}{R},$$

therefore the work done per second is

$$E = \frac{W}{g}(Vv - V_1v_1),$$

and the work done per pound of flow is

$$\frac{Vv}{g} - \frac{V_1v_1}{g}.$$

Inward flow turbine. If the water enters at the outer circumference of a wheel with a velocity of whirl V, and leaves at the inner circumference with a velocity of whirl V_1, the velocities

of the inlet and outlet tips of the vanes being v and v_1 respectively the work done on the wheel is still

$$\frac{Vv}{g} - \frac{V_1 v_1}{g} \text{ foot lbs.}$$

The flow in this case is said to be inward.

Parallel flow or axial flow turbine. If vanes, such as those shown in Fig. 174, are fixed to a wheel, the flow is parallel to the axis of the wheel, and is said to be axial.

For any given radius of the wheel, v_1 is equal to v, and the work done per pound is

$$\left(\frac{V - V_1}{g}\right) v \text{ foot lbs.,}$$

which agrees with the result already found on page 271.

174. Curved vanes. Pelton wheel.

Let a series of cups, similar to Figs. 178 and 179, be moving with a velocity v, and a stream with a greater velocity U in the same direction.

The relative velocity is

$$V_r = (U - v).$$

Neglecting friction, the relative velocity V_r will remain constant, and the water will, therefore, leave the cup at the point B with a velocity, V_r, relative to the cup.

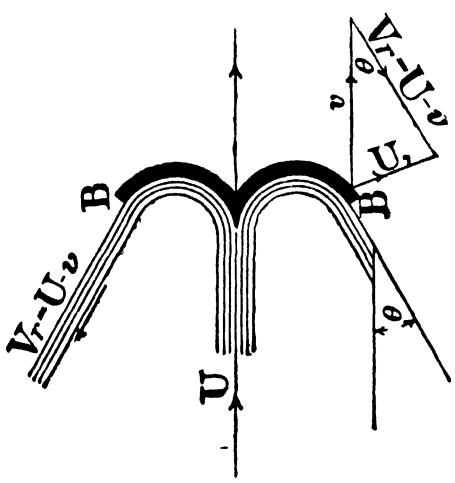

Fig. 178.

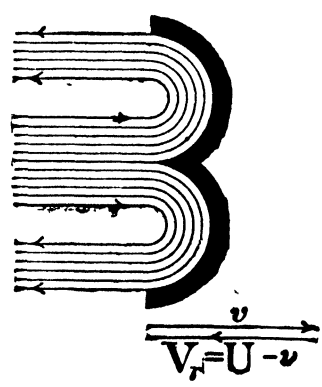

Fig. 179.

If the tip of the cup at B, Fig. 178, makes an angle θ with the direction of v, the absolute velocity with which the water leaves the cup will be the vector sum of v and V_r, and is therefore U_1. The work done on the cups is then

$$\frac{U^2}{2g} - \frac{U_1^2}{2g}$$

per lb. of water, and the efficiency is

$$e = \frac{\frac{U^2}{2g} - \frac{U_1^2}{2g}}{\frac{U^2}{2g}} = 1 - \frac{U_1^2}{U^2}.$$

For U_1, the value

$$U_1 = \sqrt{\{v - (U - v)\cos\theta\}^2 + (U - v)^2 \sin^2\theta}$$

can be substituted, and the efficiency thus determined in terms of v, U and θ.

Pelton wheel cups. If θ is zero, as in Fig. 179, and $U - v$ is equal to v, or U is twice v, U_1 clearly becomes zero, and the water drops away from the cup, under the action of gravity, without possessing velocity in the direction of motion.

The whole of the kinetic energy of the jet is thus absorbed and the theoretical efficiency of the cups is unity.

The work done determined from consideration of the change of momentum. The component of U_1, Fig. 178, in the direction of motion, is

$$v - (U - v)\cos\theta,$$

and the change of momentum per pound of water striking the vanes is, therefore,

$$\frac{U - v + (U - v)\cos\theta}{g}.$$

The work done per lb. is

$$\frac{v\{U - v + (U - v)\cos\theta\}}{g},$$

and the efficiency is

$$e = \frac{v\{U - v + (U - v)\cos\theta\}}{g \cdot \frac{U^2}{2g}}$$

$$= \frac{2v\{U - v + (U - v)\cos\theta\}}{U^2}.$$

When θ is 0, $\cos\theta$ is unity, and

$$e = \frac{4v(U - v)}{U^2},$$

which is a maximum, and equal to unity, when v is $\frac{U}{2}$.

175. Force tending to move a vessel from which water is issuing through an orifice.

When water issues from a vertical orifice of area a sq. feet, in the side of a vessel at rest, in which the surface of the water is maintained at a height h feet above the centre of the orifice, the

pressure on the orifice, or the force tending to move the vessel in the opposite direction to the movement of the water, is

$$F = 2w \,.\, a \,.\, h \text{ lbs.},$$

w being the weight of a cubic foot of water in pounds.

The vessel being at rest, the velocity with which the water leaves the orifice, neglecting friction, is

$$v = \sqrt{2gh},$$

and the quantity discharged per second in cubic feet is

$$Q = av.$$

The momentum given to the water per second is

$$M = \frac{w \,.\, a \,.\, v^2}{g}$$
$$= 2w \,.\, a \,.\, h.$$

But the momentum given to the water per second is equal to the impressed force, and therefore the force tending to move the vessel is

$$F = 2w \,.\, a \,.\, h,$$

or is equal to twice the pressure that would be exerted upon a plate covering the orifice. When a fireman holds the nozzle of a hose-pipe through which water is issuing with a velocity v, there is, therefore, a pressure on his hand equal to

$$\frac{2wav^2}{2g} = \frac{wav^2}{g}.$$

If the vessel has a velocity V backwards, the velocity U of the water relative to the earth is

$$U = v - V,$$

and the pressure exerted upon the vessel is

$$F = \frac{w \,.\, a \,.\, v \,.\, U}{g} \text{ lbs.}$$

The work done per second is

$$F \,.\, V = \frac{wavV\,(v - V)}{g} \text{ foot lbs.},$$

or

$$= \frac{V\,(v - V)}{g} \text{ foot lbs.}$$

per lb. of flow from the nozzle.

The efficiency is

$$e = \frac{V\,(v - V)}{gh}$$
$$= \frac{2V\,(v - V)}{v^2},$$

which is a maximum, when

$$v = 2V$$

and

$$e = \tfrac{1}{2}.$$

176. The propulsion of ships by water jets.

A method of propelling ships by means of jets of water issuing from orifices at the back of the ship, has been used with some success, and is still employed to a very limited extent, for the propulsion of lifeboats.

Water is taken by pumps carried by the ship from that surrounding the vessel, and is forced through the orifices. Let v be the velocity of the water issuing from the orifice relative to the ship, and V the velocity of the ship. Then $\frac{v^2}{2g}$ is the head h forcing water from the ship, and the available energy per pound of water leaving the ship is h foot pounds.

The whole of this energy need not, however, be given to the water by the pumps.

Imagine the ship to be moving through the water and having a pipe with an open end at the front of the ship. The water in front of the ship being at rest, water will enter the pipe with a velocity V relative to the ship, and having a kinetic energy $\frac{V^2}{2g}$ per pound. If friction and other losses are neglected, the work that the pumps will have to do upon each pound of water to eject it at the back with a velocity v is, clearly,

$$\frac{v^2}{2g} - \frac{V^2}{2g}.$$

As in the previous example, the velocity of the water issuing from the nozzles relative to the water behind the ship is $v - V$, and the change of momentum per pound is, therefore, $\frac{v - V}{g}$. If a is the area of the nozzles the propelling force on the ship is

$$F = \frac{wav\,(v - V)}{g} \text{ lbs.},$$

and the work done is

$$FV = \frac{wavV\,(v - V)}{g} \text{ ft. lbs.}$$

The efficiency is the work done on the ship divided by the work done by the engines, which equals $wav\left(\frac{v^2}{2g} - \frac{V^2}{2g}\right)$ and, therefore,

$$e = \frac{2V\,(v - V)}{v^2 - V^2}$$

$$= \frac{2V}{v + V},$$

which can be made as near unity as is desired by making v and V approximate to equality.

But for a given area a of the orifices, and velocity v, the nearer v approximates to V the less the propelling force F becomes, and the size of ship that can be driven at a given velocity V for the given area a of the orifices diminishes.

If v is 2V, $e = \frac{2}{3}$.

EXAMPLES.

(1) Ten cubic feet of water per second are discharged from a stationary jet, the sectional area of which is 1 square foot. The water impinges normally on a flat surface, moving in the direction of the jet with a velocity of 2 feet per second. Find the pressure on the plane in lbs., and the work done on the plane in horse-power.

(2) A jet of water delivering 100 gallons per second with a velocity of 20 feet per second impinges perpendicularly on a wall. Find the pressure on the wall.

(3) A jet delivers 160 cubic feet of water per minute at a velocity of 20 feet per second and strikes a plane perpendicularly. Find the pressure on the plane—(1) when it is at rest; (2) when it is moving at 5 feet per second in the direction of the jet. In the latter case find the work done per second in driving the plane.

(4) A fire-engine hose, 3 inches bore, discharges water at a velocity of 100 feet per second. Supposing the jet directed normally to the side of a building, find the pressure.

(5) Water issues horizontally from a fixed thin-edged orifice, 6 inches square, under a head of 25 feet. The jet impinges normally on a plane moving in the same direction at 10 feet per second. Find the pressure on the plane in lbs., and the work done in horse-power. Take the coefficient of discharge as ·64 and the coefficient of velocity as ·97.

(6) A jet and a plane surface move in directions inclined at 30°, with velocities of 30 feet and 10 feet per second respectively. What is the relative velocity of the jet and surface?

(7) Let AB and BC be two lines inclined at 30°. A jet of water moves in the direction AB, with a velocity of 20 feet per second, and a series of vanes move in the direction CB with a velocity of 10 feet per second. Find the form of the vane so that the water may come on to it tangentially, and leave it in the direction BD, perpendicular to CB.

Supposing that the jet is 1 foot wide and 1 inch thick before impinging, find the effort of the jet on the vanes.

(8) A curved plate is mounted on a slide so that the plate is free to move along the slide. It receives a jet of water at an angle of 30° with a normal to the direction of sliding, and the jet leaves the plate at an angle of 120° with the same normal. Find the force which must be applied to the plate in the direction of sliding to hold it at rest, and also the normal pressure on the slide. Quantity of water flowing is 500 lbs. per minute with a velocity of 35 feet per second.

(9) A fixed vane receives a jet of water at an angle of 120° with a direction AB. Find what angle the jet must be turned through in order that the pressure on the vane in the direction AB may be 40 lbs., when the flow of water is 45 lbs. per second at a velocity of 30 feet per second.

(10) Water under a head of 60 feet is discharged through a pipe 6 inches diameter and 150 feet long, and then through a nozzle, the area of which is one-tenth the area of the pipe.

Neglecting all losses but the friction of the pipe, determine the pressure on a fixed plate placed in front of the nozzle.

(11) A jet of water 4 inches diameter impinges on a fixed cone, the axis coinciding with that of the jet, and the apex angle being 30 degrees, at a velocity of 10 feet per second. Find the pressure tending to move the cone in the direction of its axis.

(12) A vessel containing water and having in one of its vertical sides a circular orifice 1 inch diameter, which at first is plugged up, is suspended in such a way that any displacing force can be accurately measured. On the removal of the plug, the horizontal force required to keep the vessel in place, applied opposite to the orifice, is 3·6 lbs. By the use of a measuring tank the discharge is found to be 31 gallons per minute, the level of the water in the vessel being maintained at a constant height of 9 feet above the orifice. Determine the coefficients of velocity, contraction and discharge.

(13) A train carrying a Ramsbottom's scoop for taking water into the tender is running at 24 miles an hour. What is the greatest height at which the scoop will deliver the water?

(14) A locomotive going at 40 miles an hour scoops up water from a trough. The tank is 8 feet above the mouth of the scoop, and the delivery pipe has an area of 50 square inches. If half the available head is wasted at entrance, find the velocity at which the water is delivered into the tank, and the number of tons lifted in a trench 500 yards long. What, under these conditions, is the increased resistance; and what is the minimum speed of train at which the tank can be filled? Lond. Un. 1906.

If air is freely admitted into the tube, as in Fig. 179 A, the water will

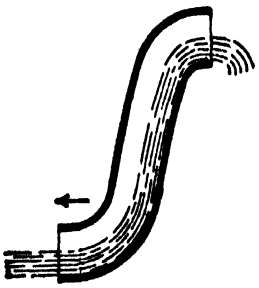

Fig. 179 A.

move into the tube with a velocity v relative to the tube equal to that of the train. (Compare with Fig. 167.) The water will rise in the tube with a diminishing velocity. The velocity of the train being 58·66 ft. per sec., and half the available head being lost, the velocity at inlet is

$$v_1 = \sqrt{2g \cdot \tfrac{1}{2} \cdot \frac{58{\cdot}66^2}{2g}} = 41{\cdot}5 \text{ ft. per sec.}$$

The velocity at a height h feet is

$$v_0 = \sqrt{41{\cdot}5^2 - 2g \cdot 8}$$
$$= 34{\cdot}8 \text{ ft. per sec.}$$

If the tube is full of water the velocity at inlet is 34·8 ft. per sec.

(15) A stream delivering 3000 gallons of water per minute with a velocity of 40 feet per second, by impinging on vanes is caused freely to deviate through an angle of 10°, the velocity being diminished to 35 feet per second. Determine the velocity impressed on the water and the pressure on the vanes due to impact.

(16) Water flows from a 2-inch pipe, without contraction, at 45 feet per second.

Determine the maximum work done on a machine carrying moving plates in the following cases and the respective efficiencies:—

(*a*) When the water impinges on a single flat plate at right angles and leaves tangentially.

(*b*) Similar to (*a*) but a large number of equidistant flat plates are interposed in the path of the jet.

(*c*) When the water glides on and off a single semi-cylindrical cup.

(*d*) When a large number of cups are used as in a Pelton wheel.

(17) In hydraulic mining, a jet 6 inches in diameter, discharged under a head of 400 feet, is delivered horizontally against a vertical cliff face. Find the pressure on the face. What is the horse-power delivered by the jet?

(18) If the action on a Pelton wheel is equivalent to that of a jet on a series of hemispherical cups, find the efficiency when the speed of the wheel is five-eighths of the speed of the jet.

(19) If in the last question the jet velocity is 50 feet per second, and the jet area 0·15 square foot, find the horse-power of the wheel.

(20) A ship has jet orifices 8 square feet in aggregate area, and discharges through the jets 100 cubic feet of water per second. The speed of the ship is 15 feet per second. Find the propelling force of the jets, the efficiency of the propeller, and, neglecting friction, the horse-power of the engines.

CHAPTER IX.

WATER WHEELS AND TURBINES.

Water wheels can be divided into two classes as follows.

(*a*) Wheels upon which the water does work partly by impulse but almost entirely by weight, the velocity of the water when it strikes the wheel being small. There are two types of this class of wheel, Overshot Wheels, Figs. 180 and 181, and Breast Wheels, Figs. 182 and 184.

(*b*) Wheels on which the water acts by impulse as when the wheel utilises the kinetic energy of a stream, or if a head h is available the whole of the head is converted into velocity before the water comes in contact with the wheel. In most impulse wheels the water is made to flow under the wheel and hence they are called Undershot Wheels.

It will be seen that in principle, there is no line of demarcation between impulse water wheels and impulse turbines, the latter only differing from the former in constructional detail.

177. Overshot water wheels.

This type of wheel is not suitable for very low or very high heads as the diameter of the wheel cannot be made greater than the head, neither can it conveniently be made much less.

Figs. 180 and 181 show two arrangements of the wheel, the only difference in the two cases being that in Fig. 181, the top of the wheel is some distance below the surface of the water in the up-stream channel or penstock, so that the velocity v with which the water reaches the wheel is larger than in Fig. 180. This has the advantage of allowing the periphery of the wheel to have a higher velocity, and the size and weight of the wheel is consequently diminished.

The buckets, which are generally of the form shown in the figures, or are curved similar to those of Fig. 182, are connected to a rim M coupled to the central hub of the wheel by

suitable spokes or framework. This class of wheel has been considerably used for heads varying from 6 to 70 feet, but is now becoming obsolete, being replaced by the modern turbine, which for the same head and power can be made much more compact, and can be run at a much greater number of revolutions per unit time.

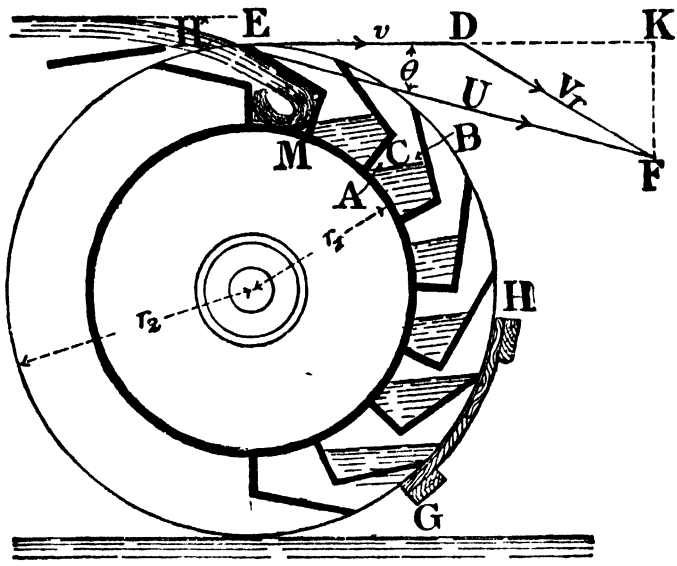

Fig. 180. Overshot Water Wheel.

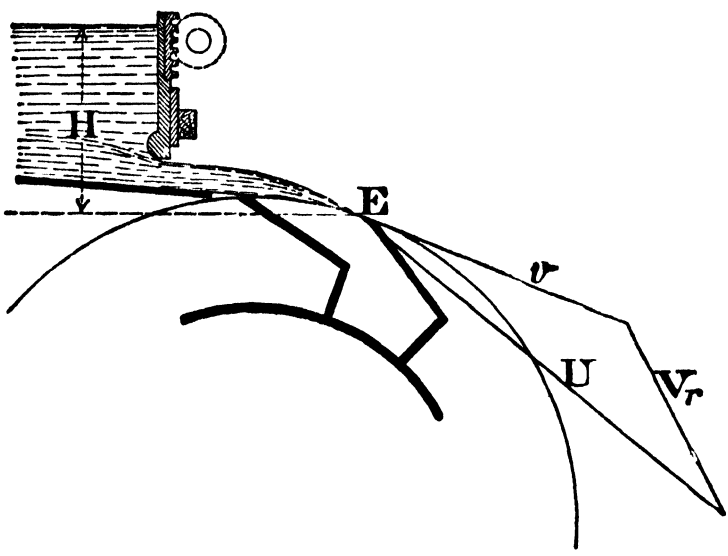

Fig. 181. Overshot Water Wheel.

The direction of the tangent to the blade at inlet for no shock can be found by drawing the triangle of velocities as in Figs. 180 and 181. The velocity of the periphery of the wheel is v and the velocity of the water U. The tip of the blade should be parallel to V_r. The mean velocity U, of the water, as it enters the wheel

in Fig. 181, will be $v_0 + k\sqrt{2gH}$, v_0 being the velocity of approach of the water in the channel, H the fall of the free surface and k a coefficient of velocity. The water is generally brought to the wheel along a wooden flume, and thus the velocity U and the supply to the wheel can be maintained fairly constant by a simple sluice placed in the flume.

The best velocity v for the periphery is, as shown below, theoretically equal to $\frac{1}{2}U \cos\theta$, but in practice the velocity v is frequently much greater and *experiment shows that the best velocity v of the periphery is about 0·9 of the velocity U of the water.

If U is to be about $1{\cdot}1v$ the water must enter the wheel at a depth not less than

$$H = \frac{U^2}{2g} = \frac{1{\cdot}2v^2}{2g}$$

below the water in the penstock.

If the total fall to the level of the water in the tail race is h, the diameter of the wheel may, therefore, be between h and

$$h - \frac{1{\cdot}2v^2}{2g}.$$

Since U is equal to $\sqrt{2gH}$, for given values of U and of h, the larger the wheel is made the greater must be the angular distance from the top of the wheel at which the water enters.

With the type of wheel and penstock shown in Fig. 181, the head H is likely to vary and the velocity U will not, therefore, be constant. If, however, the wheel is designed for the required power at minimum flow, when the head increases, and there is a greater quantity of water available, a loss in efficiency will not be important.

The horse-power of the wheel. Let D be the diameter of the wheel in feet which in actual wheels is from 10 to 70 feet.

Let N be the number of buckets, which in actual wheels is generally from $2\frac{1}{2}$ to 3D.

Let Q be the volume of water in cubic feet of water supplied per second.

Let ω be the angular velocity of the wheel in radians, and n the number of revolutions per sec.

Let b be the width of the wheel.

Let d, which equals $r_2 - r_1$, be the depth of the shroud, which on actual wheels is from 10″ to 20″.

* Theory and test of an Overshot Water Wheel, by C. R. Weidner, Wisconsin, 1913.

Whatever the form of the buckets the capacity of each bucket is

$$bd \cdot \frac{\pi D}{N}, \text{ nearly.}$$

The number of buckets which pass the stream per second is

$$\frac{N\omega}{2\pi} = N \cdot n.$$

If a fraction k of each bucket is filled with water

$$Q = kbd \frac{\pi D}{N} \cdot \frac{N\omega}{2\pi}$$

$$= \frac{kbdD\omega}{2},$$

or

$$k = \frac{2Q}{bdD\omega}.$$

The fraction k in actual wheels is from $\frac{1}{5}$ to $\frac{1}{3}$.

If h is the fall of the water to the level of the tail race and e the efficiency of the wheel, the horse-power is

$$HP = \frac{62{\cdot}4 \cdot e \cdot hQ}{550},$$

and the width b for a given horse-power, HP, is

$$b = \frac{1100HP}{62{\cdot}4ekdD\omega h} = 17{\cdot}6 \frac{HP}{ekdD\omega h}.$$

Effect of centrifugal forces. As the wheel revolves, the surface of the water in the buckets, due to centrifugal forces, takes up a curved form.

Consider any particle of water of mass w lbs. at a radius r equal to CB from the centre of the wheel and in the surface of

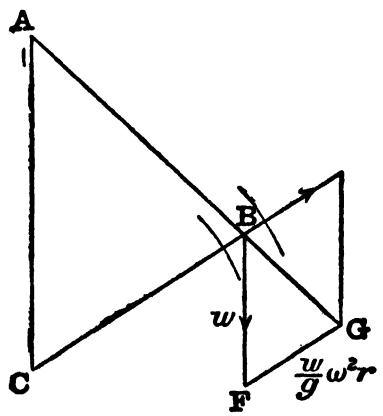

Fig. 181 *a*.

the water. The forces acting upon it are w due to gravity and the centrifugal force $\frac{w}{g}\omega^2 r$ acting in the direction CB, ω being the angular velocity of the wheel. The resultant BG (Fig. 181 *a*) of

these forces must be normal to the surface. Let BG be produced to meet the vertical through the centre in A. Then

$$\frac{AC}{CB} = \frac{AC}{r} = \frac{w}{\frac{w}{g}\omega^2 r}$$

or

$$AC = \frac{g}{\omega^2},$$

That is the normal AB always cuts the vertical through C in a fixed point A, and the surface of the water in any bucket lies on a circle with A as centre.

Losses of energy in overshot wheels.

(*a*) The whole of the velocity head $\frac{V_r^2}{2g}$ is lost in eddies in the buckets.

In addition, as the water falls in the bucket through the vertical distance EM, its velocity will be increased by gravity, and the velocity thus given will be practically all lost by eddies.

Again, if the direction of the tip of the bucket is not parallel to V_r the water will enter with shock, and a further head will be lost. The total loss by eddies and shock may, therefore, be written

$$h_1 + k\frac{V_r^2}{2g},$$

or

$$h_1 + k_1\frac{U^2}{2g},$$

k and k_1 being coefficients and h_1 the vertical distance EM.

(*b*) The water begins to leave the buckets before the level of the tail race is reached. This is increased by the centrifugal forces, as clearly, due to these forces, the water will leave the buckets earlier than it otherwise would do. If h_m is the mean height above the tail level at which the water leaves the buckets, a head equal to h_m is lost. By fitting an apron GH in front of the wheel the water can be prevented from leaving the wheel until it is very near the tail race.

(*c*) The water leaves the buckets with a velocity of whirl equal to the velocity of the periphery of the wheel and a further head $\frac{v^2}{2g}$ is lost.

(*d*) If the level of the tail water rises above the bottom of the wheel there will be a further loss due to, (1) the head h_0 equal to the height of the water above the bottom of the wheel, (2) the impact of the tail water stream on the buckets, and (3) the tendency for the buckets to lift the water on the ascending side of

In times of flood there may be a considerable rise of the down-stream, and h_0 may then be a large fraction of h. If on the other hand the wheel is raised to such a height above the tail water that the bottom of the wheel may be always clear, the head h_m will be considerable during dry weather flow, and the greatest possible amount of energy will not be obtained from the water, just when it is desirable that no energy shall be wasted.

If h is the difference in level between the up and down-stream surfaces, the maximum hydraulic efficiency possible is

$$e = \frac{h - \left(h_m + \frac{V_r^2}{2g} + \frac{v^2}{2g}\right)}{h} \quad \text{.....(1)},$$

and the actual hydraulic efficiency will be

$$e = \frac{h - \left(k_1 h_1 + k_0 h_0 + h_m + k\frac{V_r^2}{2g} + \frac{v^2}{2g}\right)}{h},$$

k, k_1 and k_0 being coefficients.

The efficiency as calculated from equation (1), for any given value of h_m, is a maximum when

$$\frac{V_r^2}{2g} + \frac{v^2}{2g} \text{ is a minimum.}$$

From the triangles EKF and KDF, Fig. 180,

$$(U \cos\theta - v)^2 + (U \sin\theta)^2 = V_r^2.$$

Therefore, adding v^2 to both sides of the equation,

$$V_r^2 + v^2 = U^2 \cos^2\theta - 2Uv \cos\theta + 2v^2 + U^2 \sin^2\theta,$$

which is a minimum for a given value of U, when $2Uv \cos\theta - 2v^2$ is a maximum. Differentiating and equating to zero this, and therefore the efficiency, is seen to be a maximum, when

$$v = \frac{U}{2} \cos\theta.$$

The actual efficiencies obtained from overshot wheels vary from 60 to 89* per cent.

178. Breast wheel.

This type of wheel, like the overshot wheel, is becoming obsolete. Fig. 182 shows the form of the wheel, as designed by Fairbairn.

The water is admitted to the wheel through a number of passages, which may be opened or closed by a sluice as shown in the figure. The directions of these passages may be made so that the water enters the wheel without shock. The water is retained

* Theory and test of Overshot Water Wheel. *Bulletin* No. 529 *University of Wisconsin.*

in the bucket, by the breast, until the bucket reaches the tail race, and a greater fraction of the head is therefore utilised than in the overshot wheel. In order that the air may enter and leave the buckets freely, they are partly open at the inner rim. Since the water in the tail race runs in the direction of the motion of the bottom of the wheel there is no serious objection to the tail race level being 6 inches above the bottom of the wheel.

The losses of head will be the same as for the overshot wheel except that h_m will be practically zero, and in addition, there will be loss by friction in the guide passages, by friction of the water as it moves over the breast, and further loss due to leakage between the breast and the wheel.

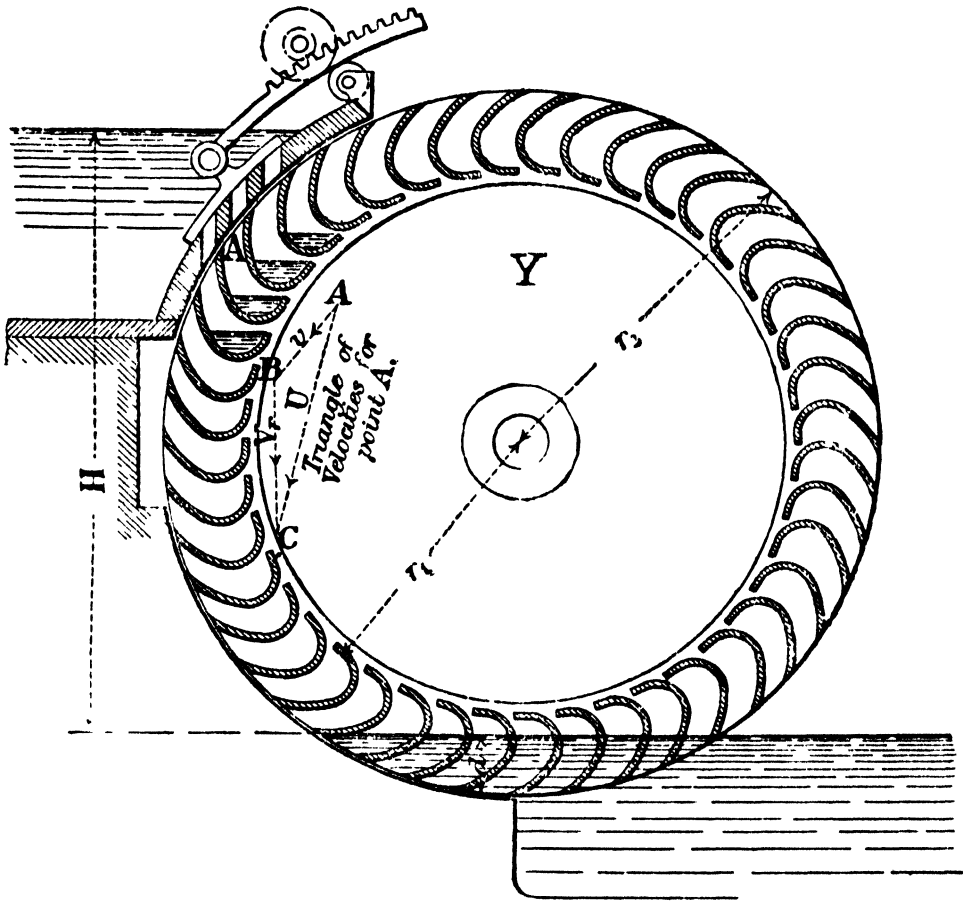

Fig. 182. Breast Wheel.

According to Rankine the velocity of the rim for overshot and breast wheels, should be from $4\frac{1}{2}$ to 8 feet per second, and the velocity U should be about $2v$.

The depth of the shroud which is equal to $r_2 - r_1$ is from 1 to $1\frac{3}{4}$ feet. Let it be denoted by d. Let H be the total fall and let it be assumed that the efficiency of the wheel is 65 per cent. Then,

the quantity of water required per second in cubic feet for a given horse-power N is

$$Q = \frac{N \cdot 550}{62{\cdot}4 \times H \times 0{\cdot}65}$$

$$= \frac{13{\cdot}5N}{H}.$$

From $\frac{1}{2}$ to $\frac{2}{3}$ of the volume of each bucket, or from $\frac{1}{2}$ to $\frac{2}{3}$ of the total volume of the buckets on the loaded part of the wheel is filled with water.

Let b be the breadth of the buckets. If now v is the velocity of the rim, and an arc AB, Fig. 183, is set off on the outer rim equal to v, and each bucket is half full, the quantity of water carried down per second is

$$\tfrac{1}{2}ABCD \cdot b.$$

Therefore

$$Q = \tfrac{1}{2}\left(\frac{r_1 + r_2}{2r_2}\right) vdb.$$

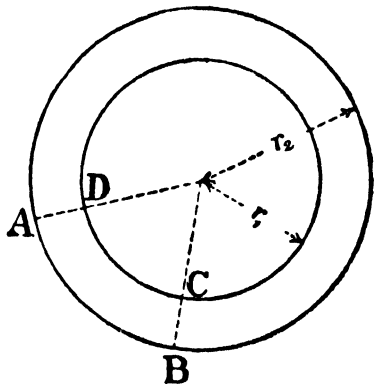

Fig. 183.

Equating this value of Q to the above value, the width b is

$$b = \frac{27ND}{(r_1 + r_2)\, vdH},$$

D being the outer diameter of the wheel.

Breast wheels are used for falls of from 5 to 15 feet and the diameter should be from 12 to 25 feet. The width may be as great as 10 feet.

Example. A breast wheel 20 feet diameter and 6 feet wide, working on a fall of 14 feet and having a depth of shroud of 1′ 3″, has its buckets $\frac{5}{8}$ full. The mean velocity of the buckets is 5 feet per second. Find the horse-power of the wheel assuming the efficiency 70 per cent.

$$HP = 5 \times 1{\cdot}25 \times 6 \times \frac{5}{8} \times \frac{62{\cdot}4 \times 0{\cdot}70 \times 14'}{550}$$

$$= 26{\cdot}1.$$

The dimensions of this wheel should be compared with those calculated for an inward flow turbine working under the same head and developing the same horse-power. See page 339.

179. Sagebien wheels.

These wheels, Fig. 184, have straight buckets inclined to the radius at an angle of from 30 to 45 degrees.

The velocity of the periphery of the wheel is very small, never exceeding $2\frac{1}{2}$ to 3 feet per second, so that the loss due to the water leaving the wheel with this velocity and due to leakage between the wheel and breast is small.

An efficiency of over 80 per cent. has been obtained with these wheels.

The water enters the wheel in a horizontal direction with a velocity U equal to that in the penstock, and the triangle of velocities is therefore ABC.

If the bucket is made parallel to V_r the water enters without shock, while at the same time there is no loss of head due to friction of guide passages, or to contraction as the water enters or leaves them; moreover the direction of the stream has not to be changed.

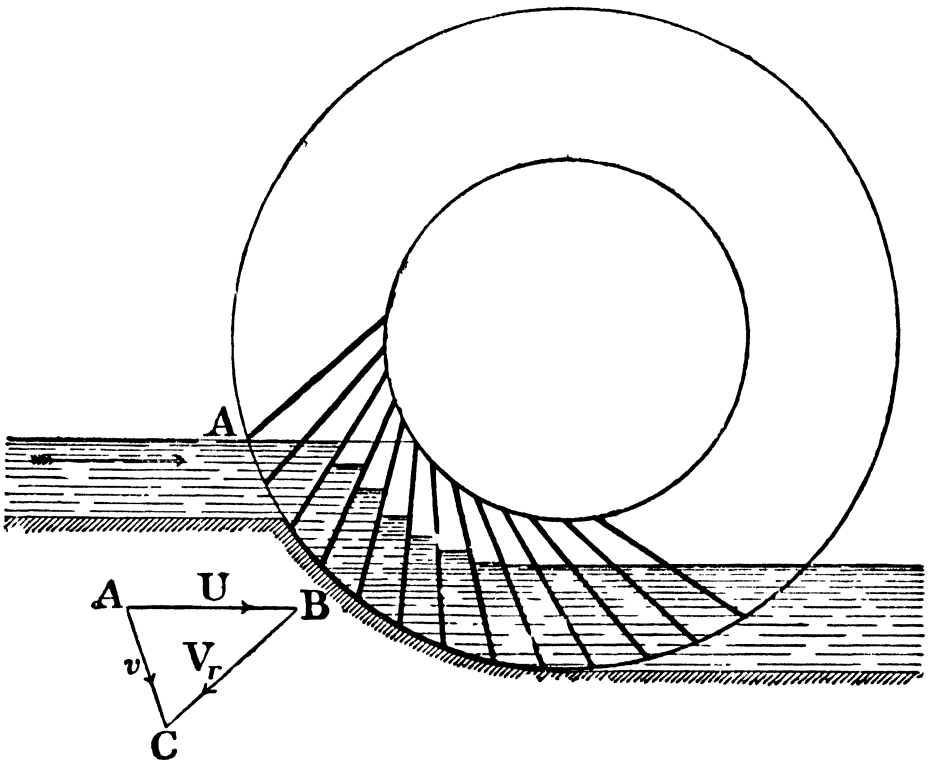

Fig 184. Sagebien Wheel

The inclined straight bucket has one disadvantage; when the lower part of the wheel is drowned, the buckets as they ascend are more nearly perpendicular to the surface of the tail water than when the blades are radial, but as the peripheral speed is very low the resistance due to this cause is not considerable.

180. Impulse wheels.

In Overshot and Breast wheels the work is done principally by the weight of the water. In the wheels now to be considered the whole of the head available is converted into velocity before the water strikes the wheel, and the work is done on the wheel by changing the momentum of the mass of moving water, or in other words, by changing the kinetic energy of the water.

Undershot wheel with flat blades. The simplest case is when a wheel with radial blades, similar to that shown in Fig. 185, is put into a running stream.

If b is the width of the wheel, d the depth of the stream under the wheel, and U the velocity in feet per second, the weight of water that will strike the wheel per second is $b.d.w$ U lbs., and the energy available per second is

$$b.d.w\frac{U^3}{2g} \text{ foot lbs.}$$

Let v be the mean velocity of the blades.

The radius of the wheel being large the blades are similar to a series of flat blades moving parallel to the stream and the water leaves them with a velocity v in the direction of motion.

As shown on page 268, the best theoretical value for the velocity v of such blades is $\frac{1}{2}$U and the maximum possible efficiency of the wheel is 0·5.

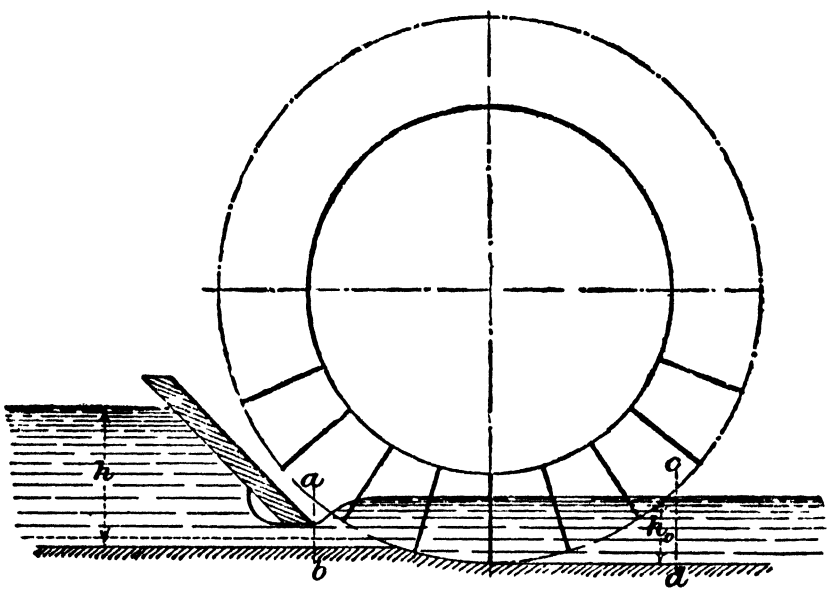

Fig. 185. Impulse Wheel.

By placing a gate across the channel and making the bed near the wheel circular as in Fig. 185, and the width of the wheel equal to that of the channel, the supply is more under control, and loss by leakage is reduced to a minimum.

The conditions are now somewhat different to those assumed for the large number of flat vanes, and the maximum possible efficiency is determined as follows.

Let Q be the number of cubic feet of water passing through the wheel per second. The mean velocity with which the water leaves the penstock at ab is $U = k\sqrt{2gh}$. Let the depth of the

stream at ab be t. The velocity with which the water leaves the wheel at the section cd is v, the velocity of the blades. If the width of the stream at cd is the same as at ab and the depth is h_0, then,

$$h_0 \times v = t \times U,$$

or

$$h_0 = \frac{tU}{v}.$$

Since U is greater than v, h_0 is greater than t, as shown in the figure.

The hydrostatic pressure on the section cd is $\frac{1}{2}h_0^2bw$ and on the section ab it is $\frac{1}{2}t^2bw$.

The change in momentum per second is

$$\frac{Qw}{g}(U - v),$$

and this must be equal to the impressed forces acting on the mass of water flowing per second through ab or cd.

These impressed forces are P the driving pressure on the wheel blades, and the difference between the hydrostatic pressures acting on cd and ab.

If, therefore, the driving force acting on the wheel is P lbs., then,

$$P + \tfrac{1}{2}h_0^2bw - \tfrac{1}{2}t^2bw = \frac{Qw}{g}(U - v).$$

Substituting for h_0, $\frac{tU}{v}$, the work done per second is

$$W = Pv = \frac{Qwv}{g}(U - v) - \tfrac{1}{2}t^2bw\left(\frac{U^2}{v} - v\right).$$

Or, since

$$Q = b \,.\, t \,.\, U,$$

$$W = \frac{Qwv}{g}\left(U - v\right) - \frac{w}{2}tQ\left(\frac{U}{v} - \frac{v}{U}\right).$$

The efficiency is then,

$$e = \frac{\dfrac{v(U - v)}{g} - \dfrac{t}{2}\left(\dfrac{U}{v} - \dfrac{v}{U}\right)}{\dfrac{U^2}{2g}},$$

which is a maximum when

$$2v^2U^2 - 4v^3U + gtU^2 + gtv^2 = 0.$$

The best velocity, v, for the mean velocity of the blades, has been found in practice to be about 0·4U, the actual efficiency is from 30 to 35 per cent., and the diameters of the wheel are generally from 10 to 23 feet.

Floating wheels. To adapt the wheel to the rising and lowering of the waters of a stream, the wheel may be mounted on

a frame which may be raised or lowered as the stream rises, or the axle carried upon pontoons so that the wheel rises automatically with the stream.

181. Poncelet wheel.

The efficiency of the straight blade impulse wheels is very small, due to the large amount of energy lost by shock, and to the velocity with which the water leaves the wheel in the direction of motion.

The efficiency of the wheel is doubled, if the blades are of such a form, that the direction of the blade at entrance is parallel to the relative velocity of the water and the blade, as first suggested by Poncelet, and the water is made to leave the wheel with no component in the direction of motion of the periphery of the wheel.

Fig. 186 shows a Poncelet wheel.

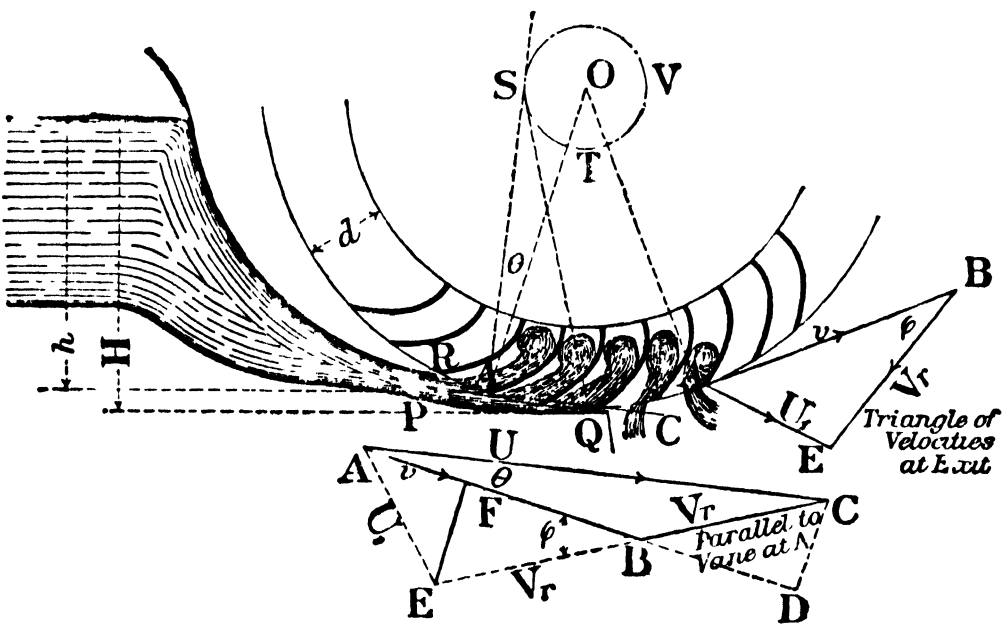

Fig. 186. Undershot Wheel.

Suppose the water to approach the edge A of a blade with a velocity U making an angle θ with the tangent to the wheel at A.

Then if the direction of motion of the water is in the direction AC, the triangle of velocities for entrance is ABC.

The relative velocity of the water and the wheel is V_r, and if the blade is made sufficiently deep that the water does not overflow the upper edge and there is no loss by shock and by friction, a particle of water will rise up the blade a vertical height

$$h_1 = \frac{V_r^2}{2g}.$$

It then begins to fall and arrives at the tip of the blade with the velocity V_r relative to the blade in the inverse direction BE.

The triangle of velocities for exit is, therefore, ABE, BE being equal to BC.

The velocity with which the water leaves the wheel is then

$$AE = U_1.$$

It has been assumed that no energy is lost by friction or by shock, and therefore the work done on the wheel is

$$\frac{U^2}{2g} - \frac{U_1^2}{2g},$$

and the theoretical hydraulic efficiency* is

$$E = \frac{\frac{U^2}{2g} - \frac{U_1^2}{2g}}{\frac{U^2}{2g}}$$

$$= 1 - \frac{U_1^2}{U^2} \quad \ldots\ldots\ldots\ldots\ldots\ldots\ldots\ldots (1).$$

This will be a maximum when U_1 is a minimum.

Now since BE = BC, the perpendiculars EF and CD, on to AB and AB produced, from the points E and C respectively, are equal. And since AC and the angle θ are constant, CD is constant for all values of v, and therefore FE is constant. But AE, that is U_1, is always greater than FE except when AE is perpendicular to AD. The velocity U_1 will have its minimum value, therefore, when AE is equal to FE or U_1 is perpendicular to v.

The triangles of velocities are then as in Fig. 187, the point B bisects AD, and

$$v = \tfrac{1}{2}U \cos\theta.$$

For maximum efficiency, therefore,

$$v = \tfrac{1}{2}U \cos\theta.$$

* In what follows, the terms theoretical hydraulic efficiency and hydraulic efficiency will be frequently used. The maximum work per lb. that can be utilised by any hydraulic machine supplied with water under a head H, and from which the water exhausts with a velocity u is $H - \frac{u^2}{2g}$. The ratio

$$\frac{H - \frac{u^2}{2g}}{H}$$

is the theoretical hydraulic efficiency. If there are other hydraulic losses in the machine equivalent to a head h_f per lb. of flow, the hydraulic efficiency is

$$\frac{H - \frac{u^2}{2g} - h_f}{H}.$$

The actual efficiency of the machine is the ratio of the external work done per lb. of water by the machine to H.

The efficiency can also be found by considering the change of momentum.

The total change of velocity impressed on the water is CE, and the change in the direction of motion is therefore FD, Fig. 186.

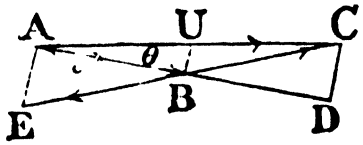

Fig. 187.

And since BE is equal to BC, FB is equal to BD, and therefore,

$$FD = 2(U\cos\theta - v).$$

The work done per lb. is, then,

$$\frac{2(U\cos\theta - v)}{g}\cdot v,$$

and the efficiency is

$$E = \frac{2(Uv\cos\theta - v^2)}{g\left(\frac{U^2}{2g}\right)}$$

$$= \frac{4(Uv\cos\theta - v^2)}{U^2} \quad \ldots\ldots\ldots\ldots\ldots\ldots\ldots (2).$$

Differentiating with respect to v and equating to zero,

$$U\cos\theta - 2v = 0,$$

or

$$v = \tfrac{1}{2}U\cos\theta.$$

The velocity U_1 with which the water leaves the wheel, is then perpendicular to v and is

$$U_1 = U\sin\theta.$$

Substituting for v its value $\frac{1}{2}U\cos\theta$ in (2), the maximum efficiency is $\cos^2\theta$.

The same result is obtained from equation (1), by substituting for U_1, $U\sin\theta$.

The maximum efficiency is then

$$E = 1 - \frac{U^2\sin^2\theta}{U^2} = \cos^2\theta.$$

A common value for θ is 15 degrees, and the theoretical hydraulic efficiency is then 0·933.

This increases as θ diminishes, and would become unity if θ could be made zero.

If, however, θ is zero, U and v are parallel and the tip of the blade will be perpendicular to the radius of the wheel.

This is clearly the limiting case, which practically is not realisable, without modifying the construction of the wheel. The necessary modification is shown in the Pelton wheel described on page 377.

The actual efficiency of Poncelet wheels is from 55 to 65 per cent.

Form of the bed. Water enters the wheel at all points between Q and R, and for no shock the bed of the channel PQ should be made of such a form that the direction of the stream, where it enters the wheel at any point A between R and Q, should make a constant angle θ with the radius of the wheel at A.

With O as centre, draw a circle touching the line AS which makes the given angle θ with the radius AO. Take several other points on the circumference of the wheel between R and Q, and draw tangents to the circle STV. If then a curve PQ is drawn normal to these several tangents, and the stream lines are parallel to PQ, the water entering any part of the wheel between R and Q, will make a constant angle θ with the radius, and if it enters without shock at A, it will do so at all points. The actual velocity of the water U, as it moves along the race PQ, will be less than $\sqrt{2gH}$, due to friction, etc. The coefficient of velocity k_v in most cases will probably be between 0·90 and 0·95, so that taking a mean value for k_v of 0·925,

$$U = 0{\cdot}925\sqrt{2gH}.$$

The best value for the velocity v taking friction into account. In determining the best velocity for the periphery of the wheel no allowance has been made for the loss of energy due to friction in the wheel.

If V_r is the relative velocity of the water and wheel at entrance, it is to be expected that the velocity relative to the wheel at exit will be less than V_r, due to friction and interference of the rising and falling particles of water.

The case is somewhat analogous to that of a stone thrown vertically up in the atmosphere with a velocity v. If there were no resistance to its motion, it would rise to a certain height,

$$h_1 = \frac{v^2}{2g},$$

and then descend, and when it again reached the earth it would have a velocity equal to its initial velocity v. Due to resistances, the height to which it rises will be less than h_1, and the velocity with which it reaches the ground will be even less than that due to falling freely through this diminished height.

Let the velocity relative to the wheel at exit be nV_r, n being a fraction less than unity.

The triangle of velocities at exit will then be ABE, Fig. 188. The change of velocity in the direction of motion is GH, which equals

$$\begin{aligned} BH + GB &= BH\,(1+n) \\ &= (1+n)\,(U\cos\theta - v). \end{aligned}$$

If the velocity at exit relative to the wheel is only nV_r, there must have been lost by friction etc., a head equal to

$$\frac{V_r^2}{2g}(1-n^2).$$

The work done on the wheel per lb. of water is, therefore,

$$\frac{\{(1+n)(U\cos\theta - v)\}v}{g} - \frac{V_r^2}{2g}(1-n^2).$$

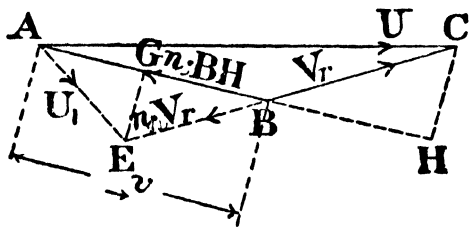

Fig. 188.

Let $(1-n^2)$ be denoted by f, then since

$$V_r^2 = BH^2 + CH^2 = (U\cos\theta - v)^2 + U^2\sin^2\theta,$$

the efficiency

$$e = \frac{\{(1+n)(U\cos\theta - v)\}\frac{v}{g} - \frac{f}{2g}\{(U\cos\theta - v)^2 + U^2\sin^2\theta\}}{\frac{U^2}{2g}}.$$

Differentiating with respect to v and equating to zero,

$$2(1+n)U\cos\theta - 4(1+n)v + 2Uf\cos\theta - 2vf = 0,$$

from which

$$v = \frac{\{(1+n)+f\}U\cos\theta}{f+2(1+n)}$$

$$= \frac{(2+n-n^2)U\cos\theta}{3-n^2+2n}.$$

If f is now supposed to be 0·5, *i.e.* the head lost by friction, etc. is $\frac{0{\cdot}5V_r^2}{2g}$, n is 0·71 and

$$v = {\cdot}56U\cos\theta.$$

If f is taken as 0·75,

$$v = 0{\cdot}6U\cos\theta.$$

Dimensions of Poncelet wheels. The diameter of the wheel should not be less than 10 feet when the bed is curved, and not less than 15 feet for a straight bed, otherwise there will be considerable loss by shock at entrance, due to the variation of the angle θ which the stream lines make with the blades between R and Q, Fig. 186. The water will rise on the buckets to a height

nearly equal to $\frac{V_r^2}{2g}$, and since the water first enters at a point R, the blade depth d must, therefore, be greater than this, or the water will overflow at the upper edge. The clearance between the bed and the bottom of the wheel should not be less than $\frac{3}{8}''$. The peripheral distance between the consecutive blades is taken from 8 inches to 18 inches.

Horse-power of Poncelet wheels. If H is the height of the surface of water in the penstock above the bottom of the wheel, the velocity U will be about

$$0{\cdot}92\sqrt{2gH},$$

and v may be taken as

$$0{\cdot}55 \times 0{\cdot}92\sqrt{2gH} = 0{\cdot}5\sqrt{2gH}.$$

Let D be the diameter of the wheel, and b the breadth, and let t be the depth of the orifice RP. Then the number of revolutions per minute is

$$n = \frac{0{\cdot}5\sqrt{2gH}}{\pi . D}.$$

The coefficient of contraction c for the orifice may be from 0·6, if it is sharp-edged, to 1 if it is carefully rounded, and may be taken as 0·8 if the orifice is formed by a flat-edged sluice.

The quantity of water striking the wheel per second is, then,

$$Q = 0{\cdot}92ctb\sqrt{2gH}.$$

If the efficiency is taken as 60 per cent., the work done per second is $0{\cdot}6 \times 62{\cdot}4QH$ ft. lbs.

The horse-power N is then

$$N = \frac{34{\cdot}5 . c . t . b\sqrt{2gH} . H}{550}.$$

182. Turbines.

Although the water wheel has been developed to a considerable degree of perfection, efficiencies of nearly 90 per cent. having been obtained, it is being almost entirely superseded by the turbine.

The old water wheels were required to drive slow moving machinery, and the great disadvantage attaching to them of having a small angular velocity was not felt. Such slow moving wheels are however entirely unsuited to the driving of modern machinery, and especially for the driving of dynamos, and they are further quite unsuited for the high heads which are now utilised for the generation of power.

Turbine wheels on the other hand can be made to run at either low or very high speeds, and to work under any head varying

from 1 foot to 2000 feet, and the speed can be regulated with much greater precision.

Due to the slow speeds, the old water wheels could not develope large power, the maximum being about 100 horse-power, whereas at Niagara Falls, turbines of 10,000 horse-power have recently been installed.

Types of Turbines.

Turbines are generally divided into two classes; impulse, or free deviation turbines, and reaction or pressure turbines.

In both kinds of turbines an attempt is made to shape the vanes so that the water enters the wheel without shock; that is the direction of the relative velocity of the water and the vane is parallel to the tip of the vane, and the direction of the leaving edge of the vane is made so that the water leaves in a specified direction.

In the first class, the whole of the available head is converted into velocity before the water strikes the turbine wheel, and the pressure in the driving fluid as it moves over the vanes remains constant, and equal to the atmospheric pressure. The wheel and vanes, therefore, must be so formed that the air has free access between the vanes, and the space between two consecutive vanes must not be full of water. Work is done upon the vanes, or in other words, upon the turbine wheel to which they are fixed, in virtue of the change of momentum or kinetic energy of the moving water, as in examples on pages 270—2.

Suppose water supplied to a turbine, as in Fig. 258, under an effective head H, which may be supposed equal to the total head minus losses of head in the supply pipe and at the nozzle. The water issues from the nozzle with a velocity $U = \sqrt{2gH}$, and the available energy per pound is

$$H = \frac{U^2}{2g}.$$

Work is done on the wheel by the absorption of the whole, or part, of this kinetic energy.

If U_1 is the velocity with which the water leaves the wheel, the energy lost by the water per pound is

$$\frac{U^2}{2g} - \frac{U_1^2}{2g},$$

and this is equal to the work done on the wheel together with energy lost by friction etc. in the wheel.

In the second class, only part of the available head is converted into velocity before the water enters the wheel, and the

velocity and pressure both vary as the water passes through the wheel. It is therefore essential, that the wheel shall always be kept full of water. Work is done upon the wheel, as will be seen in the sequence, partly by changing the kinetic energy the water possesses when it enters the wheel, and partly by changing its pressure or potential energy.

Suppose water is supplied to the turbine of Fig. 191, under the effective head H; the velocity U with which the water enters the wheel, is only some fraction of $\sqrt{2gH}$, and the pressure head at the inlet to the wheel will depend upon the magnitude of U and upon the position of the wheel relative to the head and tail water surfaces. The turbine wheel always being full of water, there is continuity of flow through the wheel, and if the head impressed upon the water by centrifugal action is determined, as on page 335, the equations of Bernoulli * can be used to determine in any given case the difference of pressure head at the inlet and outlet of the wheel.

If the pressure head at inlet is $\frac{p}{w}$ and at outlet $\frac{p_1}{w}$, and the velocity with which the water leaves the wheel is U_1, the work done on the wheel (see page 338) is

$$\frac{p}{w} - \frac{p_1}{w} + \frac{U^2}{2g} - \frac{U_1^2}{2g} \text{ per pound of water,}$$

or work is done on the wheel, partly by changing the velocity head and partly by changing the pressure head. Such a turbine is called a reaction turbine, and the amount of reaction is measured by the ratio

$$\frac{\frac{p}{w} - \frac{p_1}{w}}{H}.$$

Clearly, if p is made equal to p_1, the limiting case is reached, and the turbine becomes an impulse, or free-deviation turbine.

It should be clearly understood that in a reaction turbine no work is done on the wheel merely by hydrostatic pressure, in the sense in which work is done by the pressure on the piston of a steam engine or the ram of a hydraulic lift.

183. Reaction turbines.

The oldest form of turbine is the simple reaction, or Scotch turbine, which in its simplest form is illustrated in Fig. 189.

A vertical tube T has two horizontal tubes connected to it, the outer ends of which are bent round at right angles to the direction

* See page 334.

of length of the tube, or two holes O and O_1 are drilled as in the figure.

Water is supplied to the central tube at such a rate as to keep the level of the water in the tube constant, and at a height h above the horizontal tubes. Water escapes through the orifices O and O_1 and the wheel rotates in a direction opposite to the direction of flow of the water from the orifices. Turbines of this class are frequently used to act as sprinklers for distributing liquids, as for example for distributing sewage on to bacteria beds.

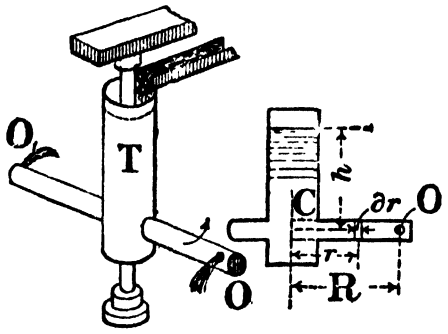

Fig. 189. Scotch Turbine.

A better practical form, known as the Whitelaw turbine, is shown in Fig. 190.

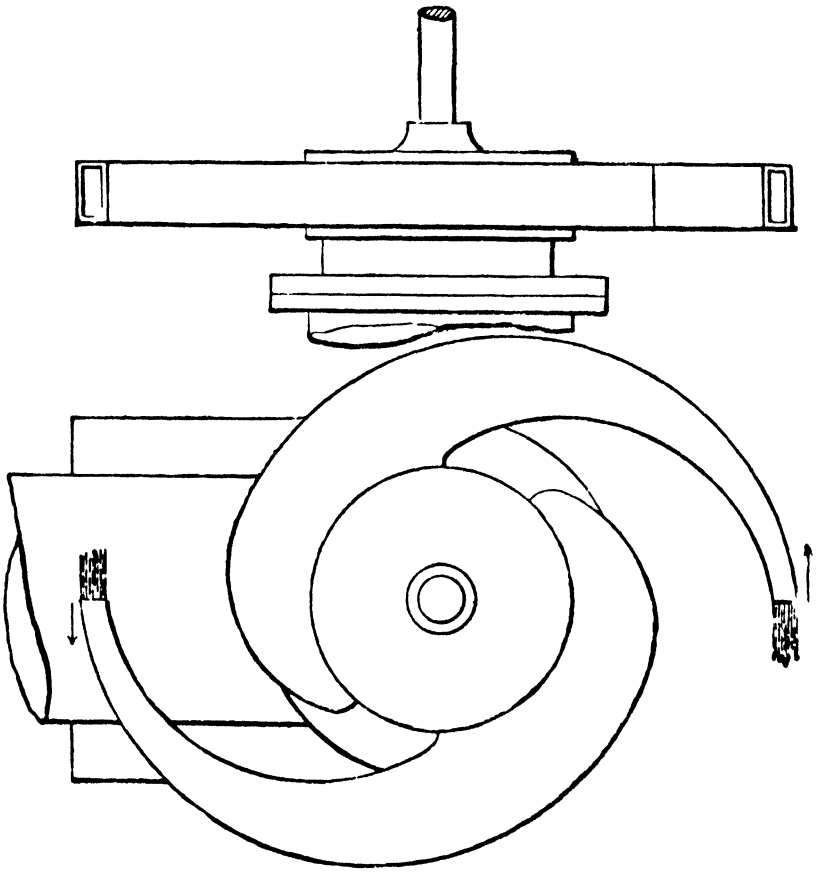
Fig 190. Whitelaw Turbine.

To understand the action of the turbine it is first necessary to consider the effect of the whirling of the water in the arm upon

the discharge from the wheel. Let v be the velocity of rotation of the orifices, and h the head of water above the orifices.

Imagine the wheel to be held at rest and the orifices opened; then the head causing velocity of flow relative to the arm is simply h, and neglecting friction the water will leave the nozzle with a velocity

$$v_0 = \sqrt{2gh}.$$

Now suppose the wheel is filled with water and made to rotate at an angular velocity ω, the orifices being closed. There will now be a pressure head at the orifice equal to h plus the head impressed on the water due to the whirling of each particle of water in the arm.

Assume the arm to be a straight tube, Fig. 189, having a cross sectional area a. At any radius r take an element of thickness ∂r.

The centrifugal force due to this element is

$$\partial f = \frac{w \,.\, a \,.\, \omega^2 r \partial r}{g}.$$

The pressure per unit area at the outer periphery is, therefore,

$$p = \frac{1}{a}\int_0^{R} \frac{wa\omega^2 r\,dr}{g}$$

$$= \frac{w\omega^2 R^2}{2g},$$

and the head impressed on the water is

$$\frac{p}{w} = \frac{\omega^2 R^2}{2g}.$$

Let v be the velocity of the orifice, then $v = \omega R$, and therefore

$$\frac{p}{w} = \frac{v^2}{2g}.$$

If now the wheel be assumed frictionless and the orifices are opened, and the wheel rotates with the angular velocity ω, the head causing velocity of flow relative to the wheel is

$$H = h + \frac{p}{w} = h + \frac{v^2}{2g} \quad \text{.....(1).}$$

Let V_r be the velocity relative to the wheel with which the water leaves the orifice.

Then $$\frac{V_r^2}{2g} = h + \frac{v^2}{2g} \quad \text{.....(2).}$$

The velocity relative to the ground, with which the water leaves the wheel, is $V_r - v$, the vector sum of V_r and v.

The water leaves the wheel, therefore, with a velocity relative to the ground of $\mu = V_r - v$, and the kinetic energy lost is

$$\frac{(V_r - v)^2}{2g} \text{ per pound of water.}$$

The theoretical hydraulic efficiency is then,

$$E = \frac{h - \frac{(V_r - v)^2}{2g}}{h}$$

$$= \frac{V_r^2 - v^2 - (V_r - v)^2}{V_r^2 - v^2}$$

$$= \frac{2v\,(V_r - v)}{V_r^2 - v^2}$$

$$= \frac{2v}{V_r + v}.$$

Since from (2), V_r becomes more nearly equal to v as v increases, the energy lost per pound diminishes as v increases, and the efficiency E, therefore, increases with v.

The efficiency of the reaction wheel when friction is considered. As before,

$$H = h + \frac{v^2}{2g} \quad \text{.....(3).}$$

Assuming the head lost by friction to be $\frac{kV_r^2}{2g}$, the total head must be equal to

$$H = h + \frac{v^2}{2g} = \frac{V_r^2}{2g}(1 + k) \quad \text{.....(4).}$$

The work done on the wheel, per pound, is now

$$h - \frac{kV_r^2}{2g} - \frac{\mu^2}{2g},$$

and the hydraulic efficiency is

$$e = \frac{h - \frac{kV_r^2}{2g} - \frac{\mu^2}{2g}}{h}.$$

Substituting for h from (4) and for μ, $V_r - v$,

$$e = \frac{2v\,(V_r - v)}{(1 + k)\,V_r^2 - v^2}.$$

Let $$V_r = nv,$$

then $$e = \frac{2\,(n - 1)}{(1 + k)\,n^2 - 1}.$$

Differentiating and equating to zero,

$$n^2\,(1 + k) - 2n\,(1 + k) + 1 = 0.$$

From which $$n = 1 + \sqrt{\frac{k}{1+k}}.$$

Or the efficiency is a maximum when

$$\left(1 + \sqrt{\frac{k}{1+k}}\right) v = V_r,$$

and $$\mu = \sqrt{\frac{k}{1+k}}\, v.$$

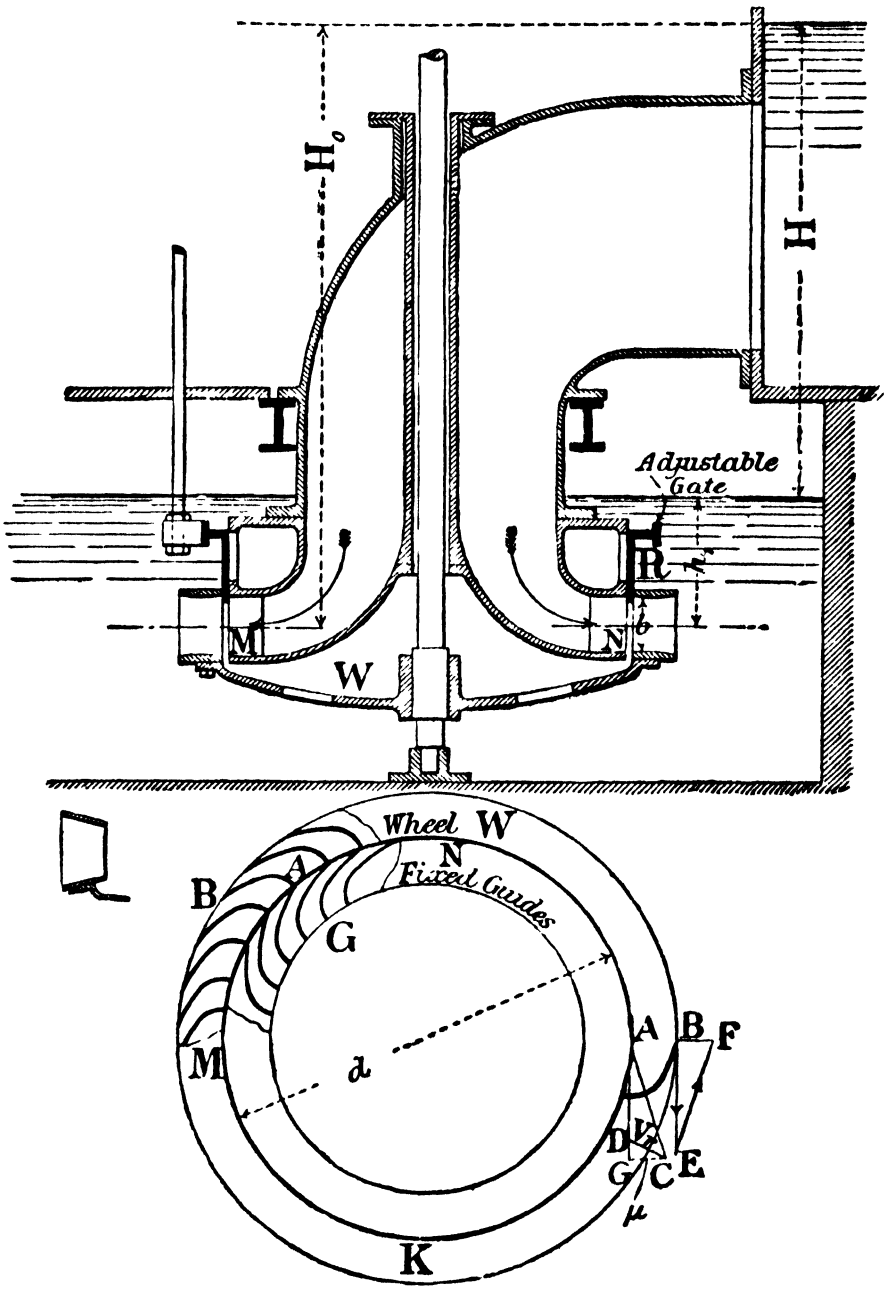

Fig. 191. Outward Flow Turbine.

184. Outward flow turbines.

The outward flow turbine was invented in 1828 by Fourneyron. A cylindrical wheel W, Figs. 191, 192, and 201, having a number of suitably shaped vanes, is fixed to a vertical axis. The water enters a cylindrical chamber at the centre of the turbine, and is directed to the wheel by suitable fixed guide blades G, and flows through the wheel in a radial direction outwards. Between the guide blades and the wheel is a cylindrical sluice R which is used to control the flow of water through the wheel.

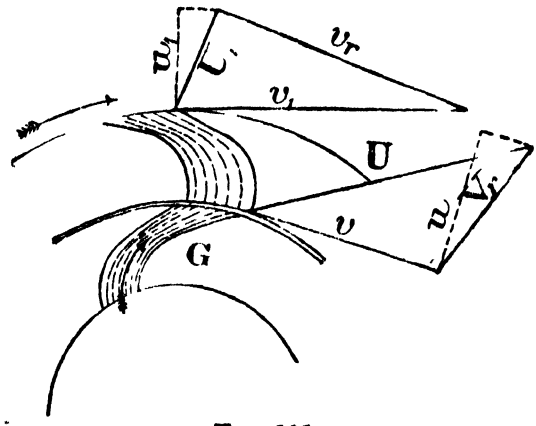

Fig. 191 *a*.

This method of regulating the flow is very imperfect, as when the gate partially closes the passages, there must be a sudden enlargement as the water enters the wheel, and a loss of head ensues. The efficiency at "part gate" is consequently very much less than when the flow is unchecked. This difficulty is partly overcome by dividing the wheel into several distinct compartments by horizontal diaphragms, as shown in Fig. 192, so that when working at part load, only the efficiency of one compartment is affected.

The wheels of outward flow turbines may have their axes, either horizontal or vertical, and may be put either above, or below, the tail water level.

The "suction tube." If placed above the tail water, the exhaust must take place down a "suction pipe," as in Fig. 201, page 317, the end of which must be kept drowned, and the pipe air-tight, so that at the outlet of the wheel a pressure less than the atmospheric pressure may be maintained. If h_1 is the height of the centre of the discharge periphery of the wheel above the tail water level, and p_a is the atmospheric pressure in pounds per square foot, the pressure head at the discharge circumference is

$$\frac{p_a}{w} - h_1 = 34 - h_1.$$

The wheel cannot be more than 34 feet above the level of the tail water, or the pressure at the outlet of the wheel will be negative, and practically, it cannot be greater than 25 feet.

It is shown later that the effective head, under which the turbine works, whether it is drowned, or placed in a suction tube, is H, the total fall of the water to the level of the tail race.

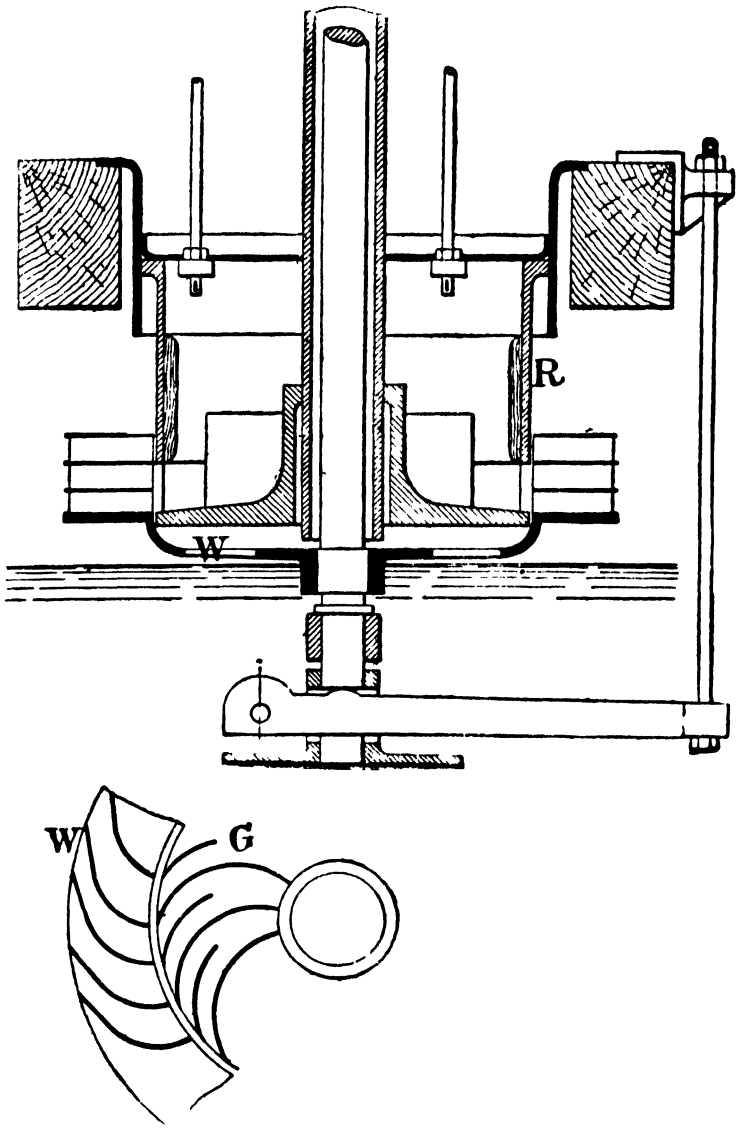

Fig. 192. Fourneyron Outward Flow Turbine.

The use of the suction tube has the advantage of allowing the turbine wheel to be placed at some distance above the tail water level, so that the bearings can be readily got at, and repairs can be more easily executed.

By making the suction tube to enlarge as it descends, the velocity of exit can be diminished very gradually, and its final

value kept small. If the exhaust takes place direct from the wheel, as in Fig. 192, into the air, the mean head available is the head of water above the centre of the wheel.

Triangles of velocities at inlet and outlet. For the water to enter the wheel without shock, the relative velocity of the water and the wheel at inlet must be parallel to the inner tips of the vanes. The triangles of velocities at inlet and outlet are shown in Figs. 193 and 194.

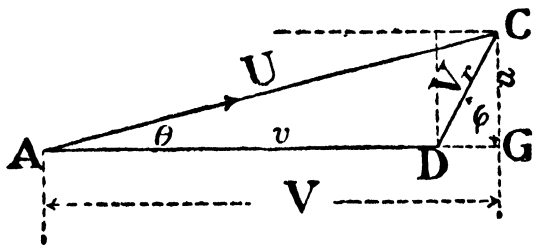

Fig. 193.

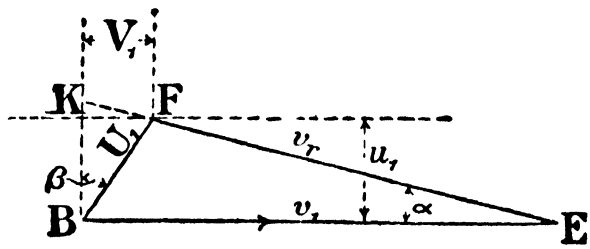

Fig. 194.

Let AC, Fig. 193, be the velocity U in direction and magnitude of the water as it flows out of the guide passages, and let AD be the velocity v of the receiving edge of the wheel. Then DC is V_r the relative velocity of the water and vane, and the receiving edge of the vane must be parallel to DC. The radial component GC, of AC, determines the quantity of water entering the wheel per unit area of the inlet circumference. Let this radial velocity be denoted by u. Then if A is the peripheral area of the inlet face of the wheel, the number of cubic feet Q per second entering the wheel is

$$Q = A \,.\, u,$$

or, if d is the diameter and b the depth of the wheel at inlet, and t is the thickness of the vanes, and n the number of vanes,

$$Q = (\pi d - n \,.\, t) \,.\, b \,.\, u.$$

Let D be the diameter, and A_1 the area of the discharge periphery of the wheel.

The peripheral velocity v_1 at the outlet circumference is

$$v_1 = \frac{v \,.\, D}{d}.$$

Let u_1 be the radial component of velocity of exit, then whatever the direction with which the water leaves the wheel the radial component of velocity for a given discharge is constant.

The triangle of velocity can now be drawn as follows:

Set off BE equal to v_1, Fig. 194, and BK radial and equal to u_1.

Let it now be supposed that the direction EF of the tip of the vane at discharge is known. Draw EF parallel to the tip of the vane at D, and through K draw KF parallel to BE to meet EF in F.

Then BF is the velocity in direction and magnitude with which the water leaves the wheel, relative to the ground, or to the fixed casing of the turbine. Let this velocity be denoted by U_1. If, instead of the direction EF being given, the velocity U_1 is given in direction and magnitude, the triangle of velocity at exit can be drawn by setting out BE and BF equal to v_1 and U_1 respectively, and joining EF. Then the tip of the blade must be made parallel to EF.

For any given value of U_1 the quantity of water flowing through the wheel is

$$Q = A_1 U_1 \cos\beta = A_1 u_1.$$

Work done on the wheel neglecting friction, etc. The kinetic energy of the water as it leaves the turbine wheel is

$$\frac{U_1^2}{2g} \text{ per pound,}$$

and if the discharge is into the air or into the tail water this energy is of necessity lost. Neglecting friction and other losses, the available energy per pound of water is then

$$H - \frac{U_1^2}{2g} \text{ foot lbs.,}$$

and the theoretical hydraulic efficiency is

$$E = \frac{H - \frac{U_1^2}{2g}}{H},$$

and is constant for any given value of U_1, and independent of the direction of U_1. This efficiency must not be confused with the actual efficiency, which is much less than E.

The smaller U_1, the greater the theoretical hydraulic efficiency, and since for a given flow through the wheel, U_1 will be least when it is radial and equal to u_1, the greatest amount of work will be obtained for the given flow, or the efficiency will be a maximum, when the water leaves the wheel radially. If the

water leaves with a velocity U_1 in any other direction, the efficiency will be the same, but the power of the wheel will be diminished. If the discharge takes place down a suction tube, and there is no loss between the wheel and the outlet from the tube, the velocity head lost then depends upon the velocity U_1 with which the water leaves the tube, and is independent of the velocity or direction with which the water leaves the wheel.

The velocity of whirl at inlet and outlet. The component of U, Fig. 193, in the direction of v is the velocity of whirl at inlet, and the component of U_1, Fig. 194, in the direction of v_1, is the velocity of whirl at exit.

Let V and V_1 be the velocities of whirl at inlet and outlet respectively, then

$$V = U \cos \theta$$

and

$$V_1 = U_1 \sin \beta = u_1 \tan \beta.$$

Work done on the wheel. It has already been shown, section 173, page 275, that when water enters a wheel, rotating about a fixed centre, with a velocity U, and leaves it with velocity U_1, the component V_1 of which is in the same direction as v_1, the work done on the wheel is

$$\frac{Vv}{g} - \frac{V_1 v_1}{g} \text{ per pound,}$$

and therefore, neglecting friction,

$$\frac{Vv}{g} - \frac{V_1 v_1}{g} = H - \frac{U_1^2}{2g} \quad \text{.....(1).}$$

This is a general formula for all classes of turbines and should be carefully considered by the student.

Expressed trigonometrically,

$$\frac{vU \cos \theta}{g} - \frac{v_1 u_1 \tan \beta}{g} = H - \frac{U_1^2}{2g} \quad \text{.....(2).}$$

If F is to the left of BK, V_1 is negative.

Again, since the radial flow at inlet must equal the radial flow at outlet, therefore

$$AU \sin \theta = A_1 U_1 \cos \beta \quad \text{.....(3).}$$

When U_1 is radial, V_1 is zero, and u_1 equals $v_1 \tan \alpha$.

Then

$$\frac{Vv}{g} = H - \frac{u_1^2}{2g} \quad \text{.....(4),}$$

from which

$$\frac{vU \cos \theta}{g} = H - \frac{v_1^2 \tan^2 \alpha}{2g} \quad \text{.....(5),}$$

and from (3)

$$AU \sin \theta = A_1 v_1 \tan \alpha \quad \text{.....(6).}$$

If the tip of the vane is radial at inlet, *i.e.* V_r is radial,

$$V = v$$

and
$$\frac{V^2}{g} = \frac{v^2}{g} = H - \frac{u_1^2}{2g} \quad \text{.....(7)}$$

$$= H - \frac{v_1^2 \tan^2 a}{2g} \quad \text{.....(8).}$$

In actual turbines $\frac{u_1^2}{2g}$ is from ·02H to ·07H.

Example. An outward flow turbine wheel, Fig. 195, has an internal diameter of 5·249 feet, and an external diameter of 6·25 feet, and it makes 250 revolutions per minute. The wheel has 32 vanes, which may be taken as $\frac{3}{4}$ inch thick at inlet and $1\frac{1}{4}$ inches thick at outlet. The head is 141·5 feet above the centre of the wheel and the exhaust takes place into the atmosphere. The effective width of the wheel face at inlet and outlet is 10 inches. The quantity of water supplied per second is 215 cubic feet.

Neglecting all frictional losses, determine the angles of the tips of the vanes at inlet and outlet so that the water shall leave radially.

The peripheral velocity at inlet is

$$v = \pi \times 5{\cdot}249 \times \tfrac{250}{60} = 69 \text{ ft. per sec.,}$$

and at outlet
$$v_1 = \pi \times 6{\cdot}25 \times \tfrac{250}{60} = 82 \text{ ft.} \quad ,, \quad ,,$$

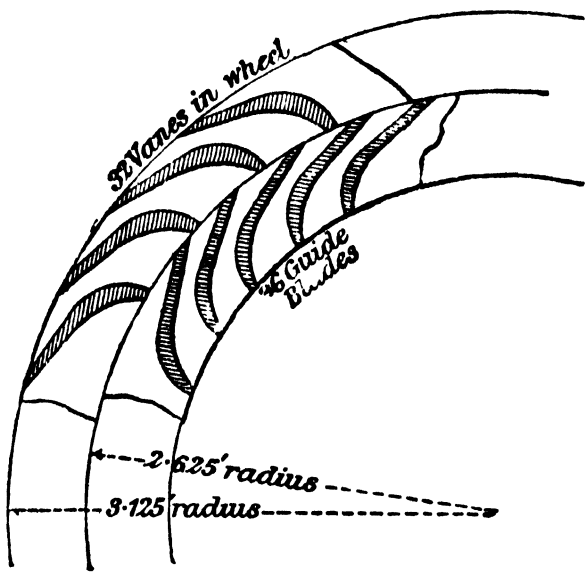

Fig. 195.

The radial velocity of flow at inlet is

$$u = \frac{215}{\pi \times 5{\cdot}249 \times \frac{10}{12} - \frac{32}{12} \times \frac{3}{4}}$$

$$= 18{\cdot}35 \text{ ft. per sec.}$$

The radial velocity of flow at exit is

$$u_1 = \frac{215}{\pi \times 6{\cdot}25 \times \frac{10}{12} - \frac{32}{12} \times \frac{5}{4}},$$

$$= 16{\cdot}5 \text{ ft. per sec.}$$

Therefore,
$$\frac{u_1^2}{2g} = 4{\cdot}23 \text{ ft.}$$

Then $$\frac{Vv}{g} = 141{\cdot}5 - 4{\cdot}23$$
$$= 137{\cdot}27 \text{ ft.}$$

and $$V = \frac{137{\cdot}27 \times 32{\cdot}2}{69} = 64 \text{ ft. per sec.}$$

To draw the triangle of velocities at inlet set out v and u at right angles.

Then since V is 64, and is the tangential component of U, and u is the radial component of U, the direction and magnitude of U is determined.

By joining B and C the relative velocity V_r is obtained, and BC is parallel to the tip of the vane.

The triangle of velocities at exit is DEF, and the tip of the vane must be parallel to EF.

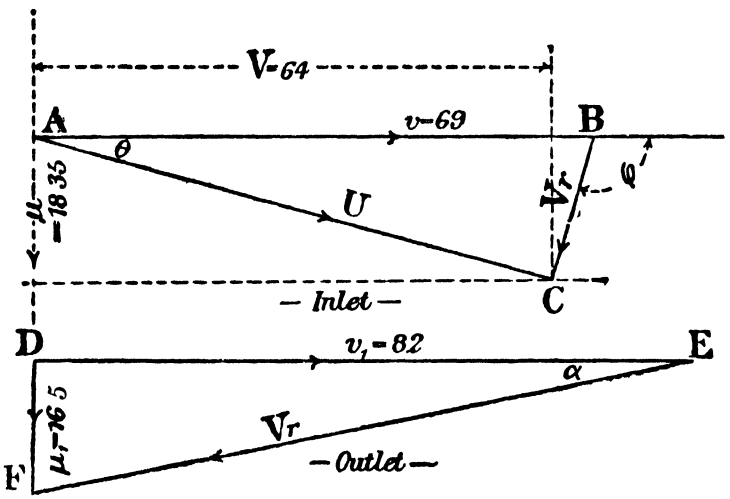

Fig. 196.

Fig. 197.

The angles θ, ϕ, and α can be calculated; for

$$\tan\theta = \frac{18{\cdot}35}{64} = 0{\cdot}2867,$$

$$\tan\phi = -\frac{18{\cdot}35}{5} = -3{\cdot}670$$

and $$\tan\alpha = \frac{16{\cdot}5}{82} = 0\ 2012,$$

and, therefore, $$\theta = 16°,$$
$$\phi = 105°\ 14',$$
$$\alpha = 11°\ 23'.$$

It will be seen later how these angles are modified when friction is considered.

Fig. 198 shows the form the guide blades and vanes of the wheel would probably take.

The path of the water through the wheel. The average radial velocity through the wheel may be taken as 17·35 feet.

The time taken for a particle of water to get through the wheel is, therefore,

$$\frac{R - r}{17{\cdot}35} = \frac{0{\cdot}5}{17{\cdot}35} = {\cdot}0288 \text{ sec.}$$

The angle turned through by the wheel in this time is 0·39 radians.

Set off the arc AB, Fig. 198, equal to ·39 radian, and divide it into four equal parts, and draw the radii *ea*, *fb*, *gc* and B*d*.

Divide AD also into four equal parts, and draw circles through A_1, A_2, and A_3.

Suppose a particle of water to enter the wheel at A in contact with a vane and suppose it to remain in contact with the vane during its passage through the wheel. Then, assuming the radial velocity is constant, while the wheel turns through the arc A*e* the water will move radially a distance AA_1 and a particle that came on to

the vane at A will, therefore, be in contact with the vane on the arc through A_1. The vane initially passing through A will be now in the position *e*1, *a*1 being equal to *h*J and the particle will therefore be at 1. When the particle arrives on the arc through A_2 the vane will pass through *f*, and the particle will consequently be at 2, *b*2 being equal to *mn*. The curve A4 drawn through A1 2 etc. gives the path of the water relative to the fixed casing.

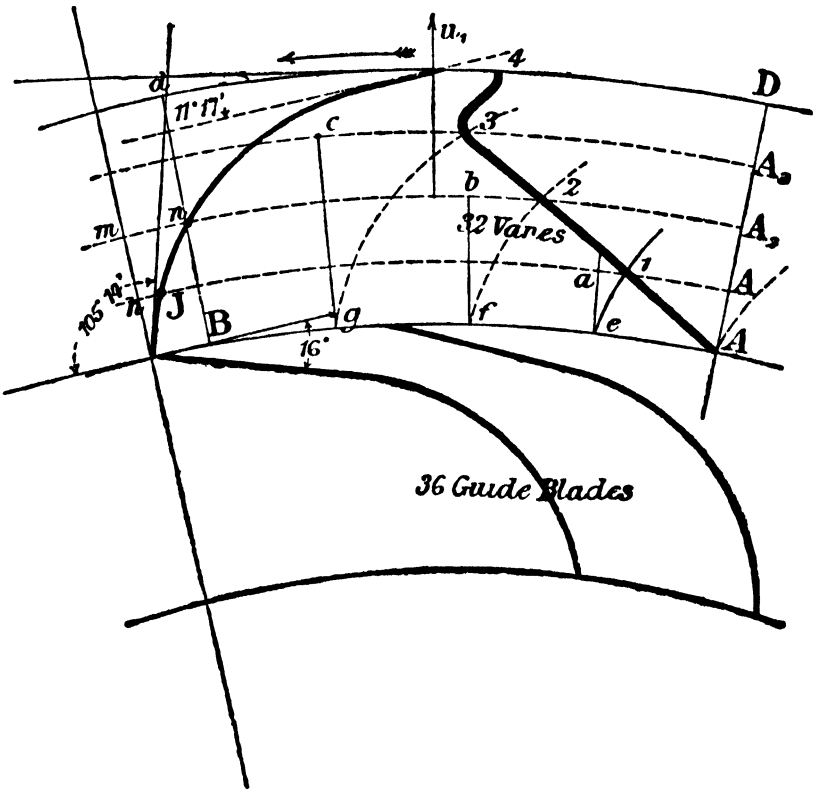

Fig. 198.

185. Losses of head due to frictional and other resistances in outward flow turbines.

The losses of head may be enumerated as follows:

(*a*) Loss by friction at the sluice and in the penstock or supply pipe.

If v_0 is the velocity, and h_a the head lost by friction in the pipe,

$$h_a = \frac{f v_0^2 L}{2gm}\,^{*}.$$

(*b*) As the water enters and moves through the guide passages there will be a loss due to friction and by sudden changes in the velocity of flow.

This head may be expressed as

$$h_b = k\frac{U^2}{2g},$$

k being a coefficient.

* See page 119.

(*c*) There is a loss of head at entrance due to shock as the direction of the vane at entrance cannot be determined with precision.

This may be written

$$h_c = k_1 \frac{V_r^2}{2g},$$

that is, it is made to depend upon V_r the relative velocity of the water, and the tip of the vane.

(*d*) In the wheel there is a loss of head h_d, due to friction, which depends upon the relative velocity of the water and the wheel. This relative velocity may be changing, and on any small element of surface of the wheel the head lost will diminish, as the relative velocity diminishes.

It will be seen on reference to Figs. 193 and 194, that as the velocity of whirl V_1 is diminished the relative velocity of flow v_r at exit increases, but the relative velocity V_r at inlet passes through a minimum when V is equal to v, or the tip of the vane is radial. If V_0 is the relative velocity of the water and the vane at any radius, and b is the width of the vane, and ∂l an element of length, then,

$$h_d = \Sigma k_2 \frac{V_0^2}{2g} b \,.\, \partial l,$$

k_2 being a third coefficient.

If there is any sudden change of velocity as the water passes through the wheel there will be a further loss, and if the turbine has a suction tube there may be also a small loss as the water enters the tube from the wheel.

The whole loss of head in the penstock and guide passages may be called H_f and the loss in the wheel h_f. Then if U_0 is the

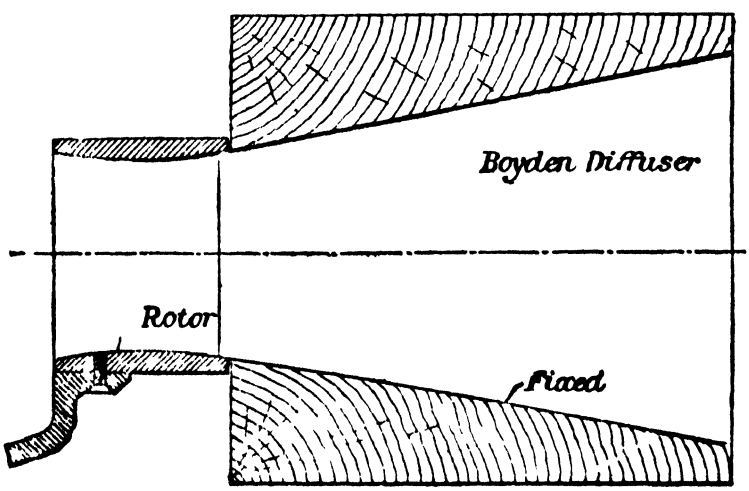

Fig. 199.

velocity with which the water leaves the turbine the effective head is

$$H - \frac{U_0^2}{2g} - h_f - H_f.$$

In well designed inward and outward flow turbines

$$\frac{U_0^2}{2g} + h_f + H_f$$

varies from 0·10H to ·22H and the hydraulic efficiency is, therefore, from 90 to 78 per cent.

The efficiency of inward and outward flow turbines including mechanical losses is from 75 to 88 per cent.

Calling the hydraulic efficiency e, the general formula (1), section 184, may now be written

$$\frac{Vv}{g} - \frac{V_1 v_1}{g} = eH$$
$$= \cdot 78 \text{ to } \cdot 9H.$$

Outward flow turbines were made by Boyden* about 1848 for which he claimed an efficiency of 88 per cent. The workmanship was of the highest quality and great care was taken to reduce all losses by friction and shock. The section of the crowns of the wheel of the Boyden turbine is shown in Fig. 199. Outside of the turbine wheel was fitted a "diffuser" through which, after leaving the wheel, the water moved radially with a continuously diminishing velocity, and finally entered the tail race with a velocity much less, than if it had done so direct from the wheel. The loss by velocity head was thus diminished, and Boyden claimed that the diffuser increased the efficiency by 3 per cent.

186. Some actual outward flow turbines.

Double outward flow turbines. The general arrangement of an outward flow turbine as installed at Chèvres is shown in Fig. 200. There are four wheels fixed to a vertical shaft, two of which receive the water from below, and two from above. The fall varies from 27 feet in dry weather to 14 feet in time of flood.

The upper wheels only work in time of flood, while at other times the full power is developed by the lower wheels alone, the cylindrical sluices which surround the upper wheels being set in such a position as to cover completely the exit to the wheel.

The water after leaving the wheels, diminishes gradually in velocity, in the concrete passages leading to the tail race, and the loss of head due to the velocity with which the water enters the

* *Lowell Hydraulic Experiments*, J. B. Francis, 1855.

tail race is consequently small. These passages serve the same purpose as Boyden's diffuser, and as the enlarging suction tube, in that they allow the velocity of exit to diminish gradually.

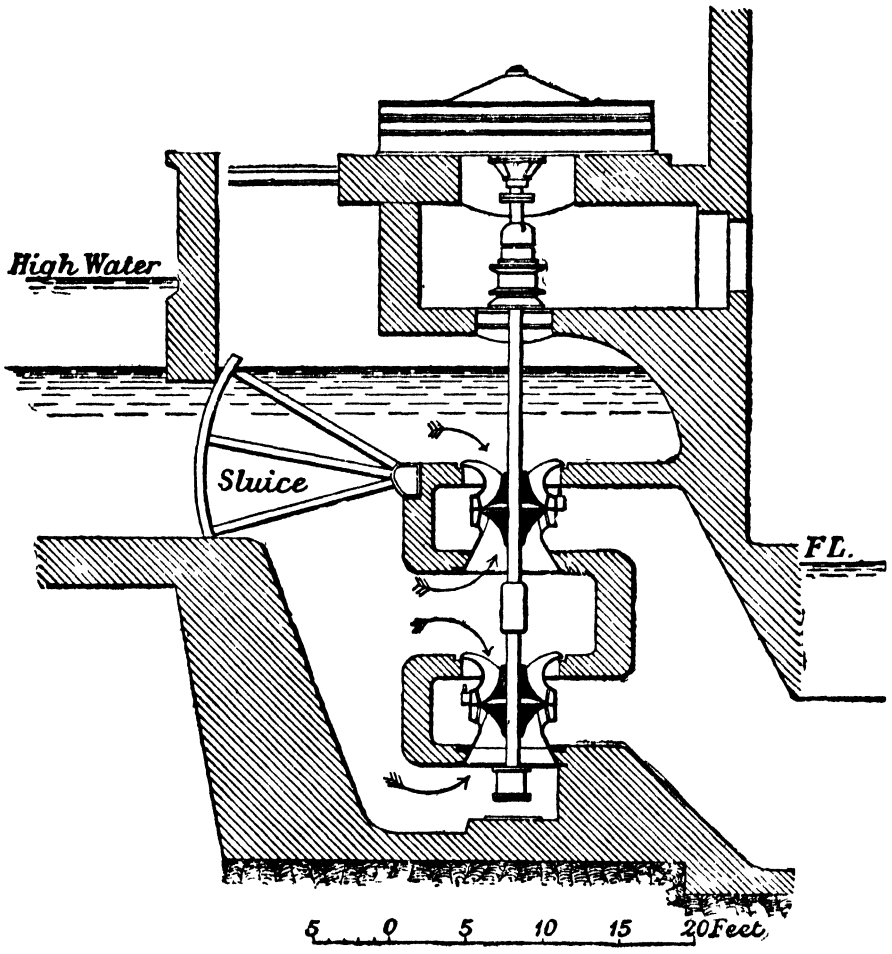

Fig. 200. Double Outward Flow Turbine. (Escher Wyss and Co.)

Outward flow turbine with horizontal axis. Fig. 201 shows a section through the wheel, and the supply and exhaust pipes, of an outward flow turbine, having a horizontal axis and exhausting down a "suction pipe." The water after leaving the wheel enters a large chamber, and then passes down the exhaust pipe, the lower end of which is below the tail race.

The supply of water to the wheel is regulated by a horizontal cylindrical gate S, between the guide blades G and the wheel. The gate is connected to the ring R, which slides on guides, outside the supply pipe P, and is under the control of the governor.

The pressure of the water in the supply pipe is prevented from causing end thrust on the shaft by the partition T, and between T and the wheel the exhaust water has free access.

Outward flow turbines at Niagara Falls. The first turbines installed at Niagara Falls for the generation of electric power,

were outward flow turbines of the type shown in Figs. 202 and 203.

There are two wheels on the same vertical shaft, the water being brought to the chamber between the wheels by a vertical penstock 7′ 6″ diameter. The water passes upwards to one wheel and downwards to the other.

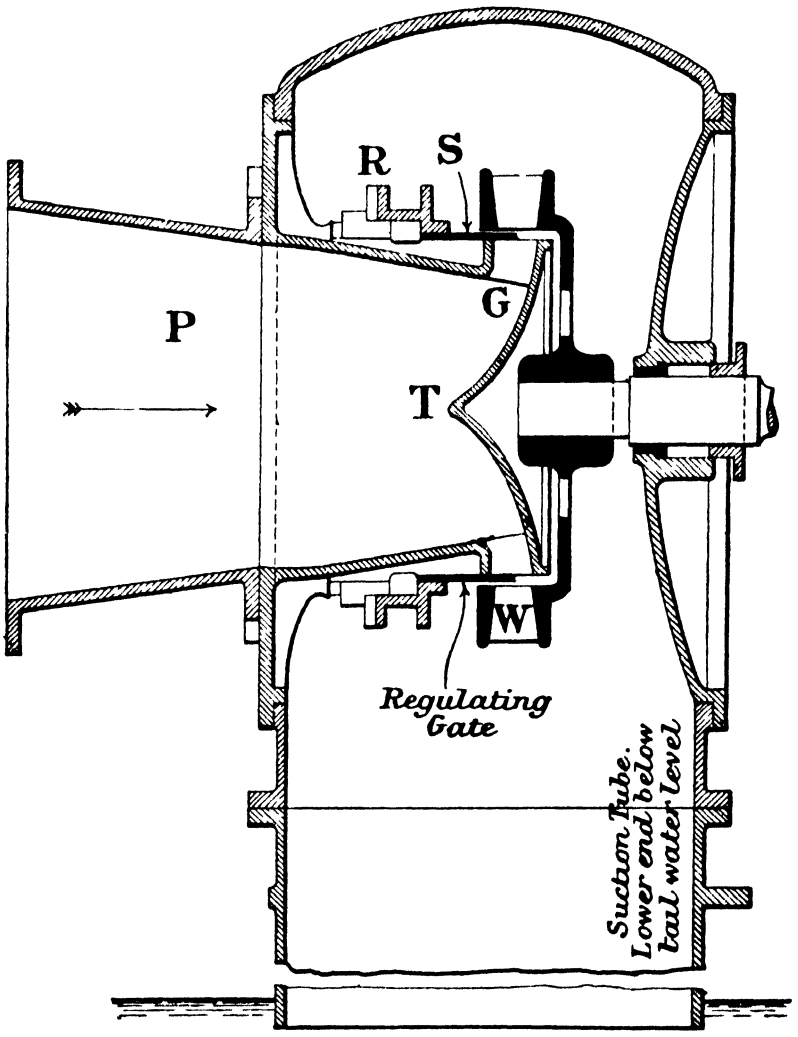

Fig 201. Outward Flow Turbine with Suction Tube.

As shown in Fig. 202 the water pressure in the chamber is prevented from acting on the lower wheel by the partition MN, but is allowed to act on the lower side of the upper wheel, the upper partition HK having holes in it to allow the water free access underneath the wheel. The weight of the vertical shaft, and of the wheels, is thus balanced, by the water pressure itself.

The lower wheel is fixed to a solid shaft, which passes through the centre of the upper wheel, and is connected to the hollow shaft of the upper wheel as shown diagrammatically in Fig. 202. Above this connection, the vertical shaft is formed of a hollow

tube 38 inches diameter, except where it passes through the bearings, where it is solid, and 11 inches diameter.

A thrust block is also provided to carry the unbalanced weight.

The regulating sluice is external to the wheel. To maintain a high efficiency at part gate, the wheel is divided into three separate compartments as in Fourneyron's wheel.

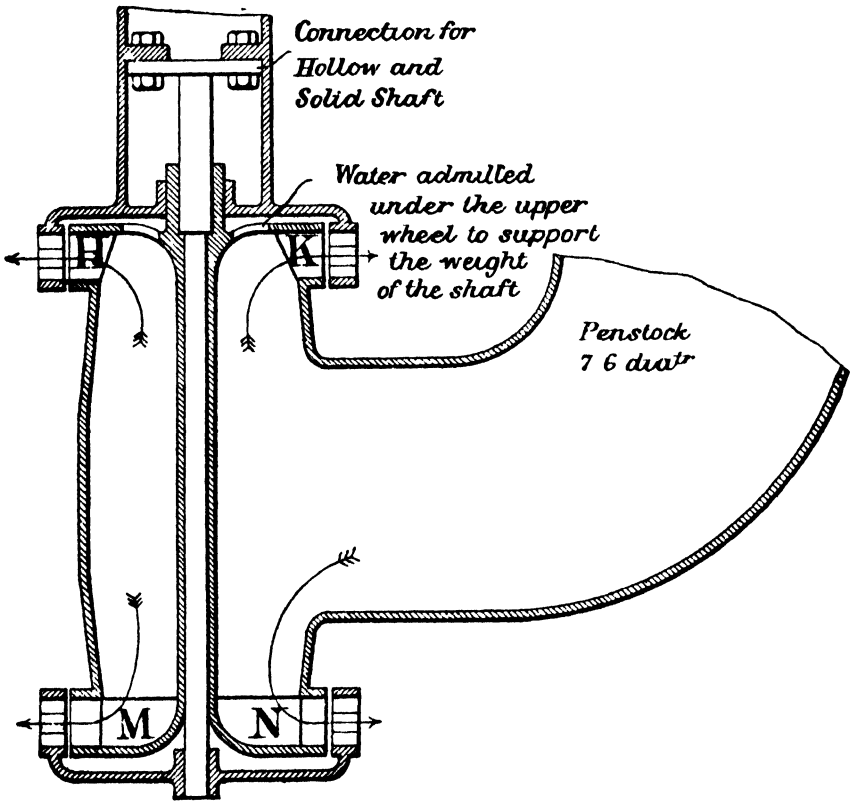

Fig. 202. Diagrammatic section of Outward Flow Turbine at Niagara Falls.

A vertical section through the lower wheel is shown in Fig. 203, and a part sectional plan of the wheel and guide blades in Fig. 195.

(Further particulars of these turbines and a description of the governor will be found in *Cassier's Magazine*, Vol. III., and in *Turbines Actuelle*) Bûchetti, Paris 1901.

187. Inward flow turbines.

In an inward flow turbine the water is directed to the wheel through guide passages external to the wheel, and after flowing radially finally leaves the wheel in a direction parallel to the axis.

Like the outward flow turbine it may work drowned or with a suction tube.

The water only acts upon the blades during the radial movement.

As improved by Francis*, in 1849, the wheel was of the form shown in Fig. 204 and was called by its inventor a "central vent wheel."

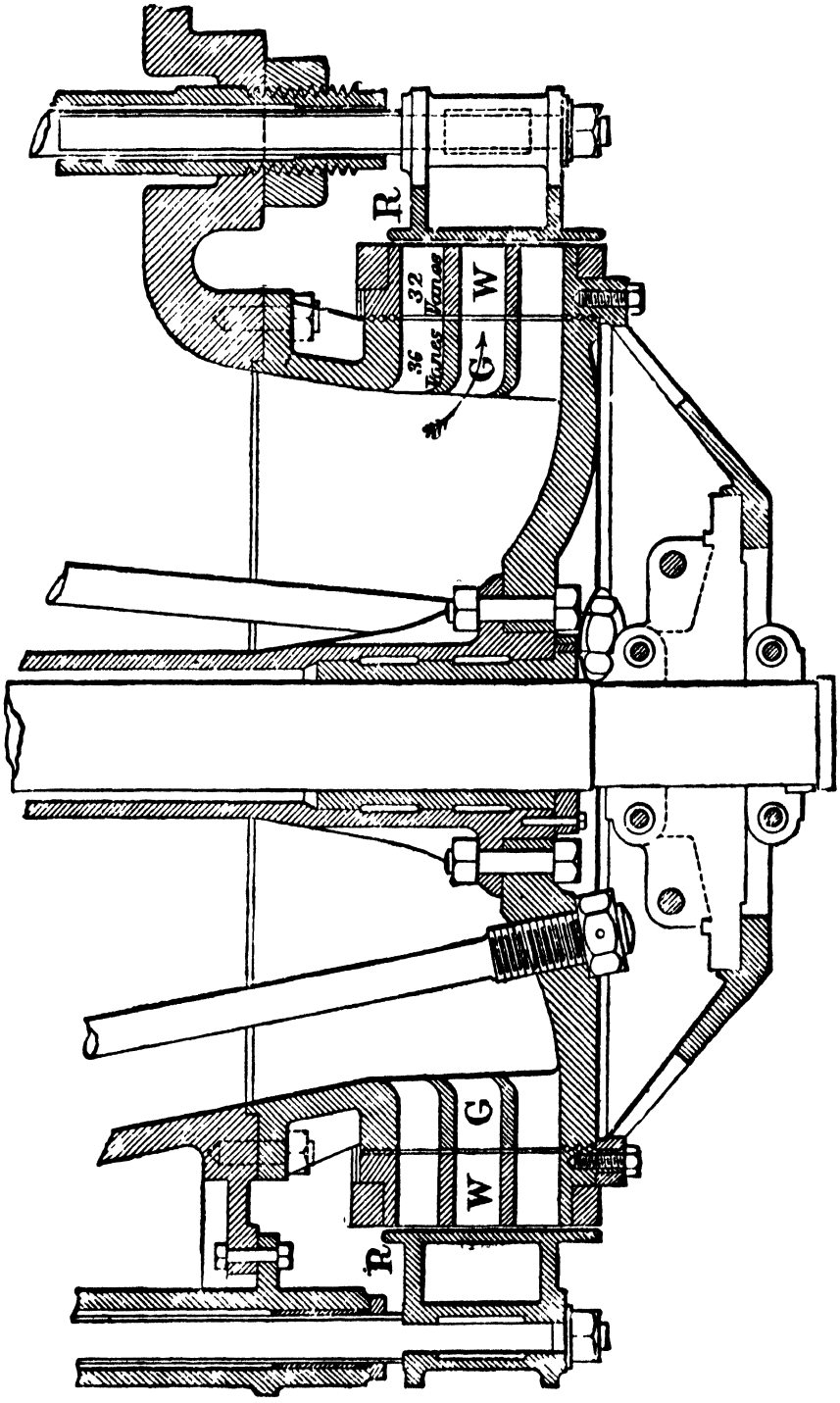

Fig. 203. Section through the lower wheel of Niagara Falls Turbine.

The wheel is carried on a vertical shaft, resting on a footstep, and supported by a collar bearing placed above the staging S.

* *Lowell Hydraulic Experiments*, F. B. Francis, 1855.

Above the wheel is a heavy casting C, supported by bolts from the staging S, which acts as a guide for the cylindrical sluice F, and carries the bearing B for the shaft. There are 40 vanes in the wheel shown, and 40 fixed guide blades, the former being made of iron one quarter of an inch thick and the latter three-sixteenths of an inch.

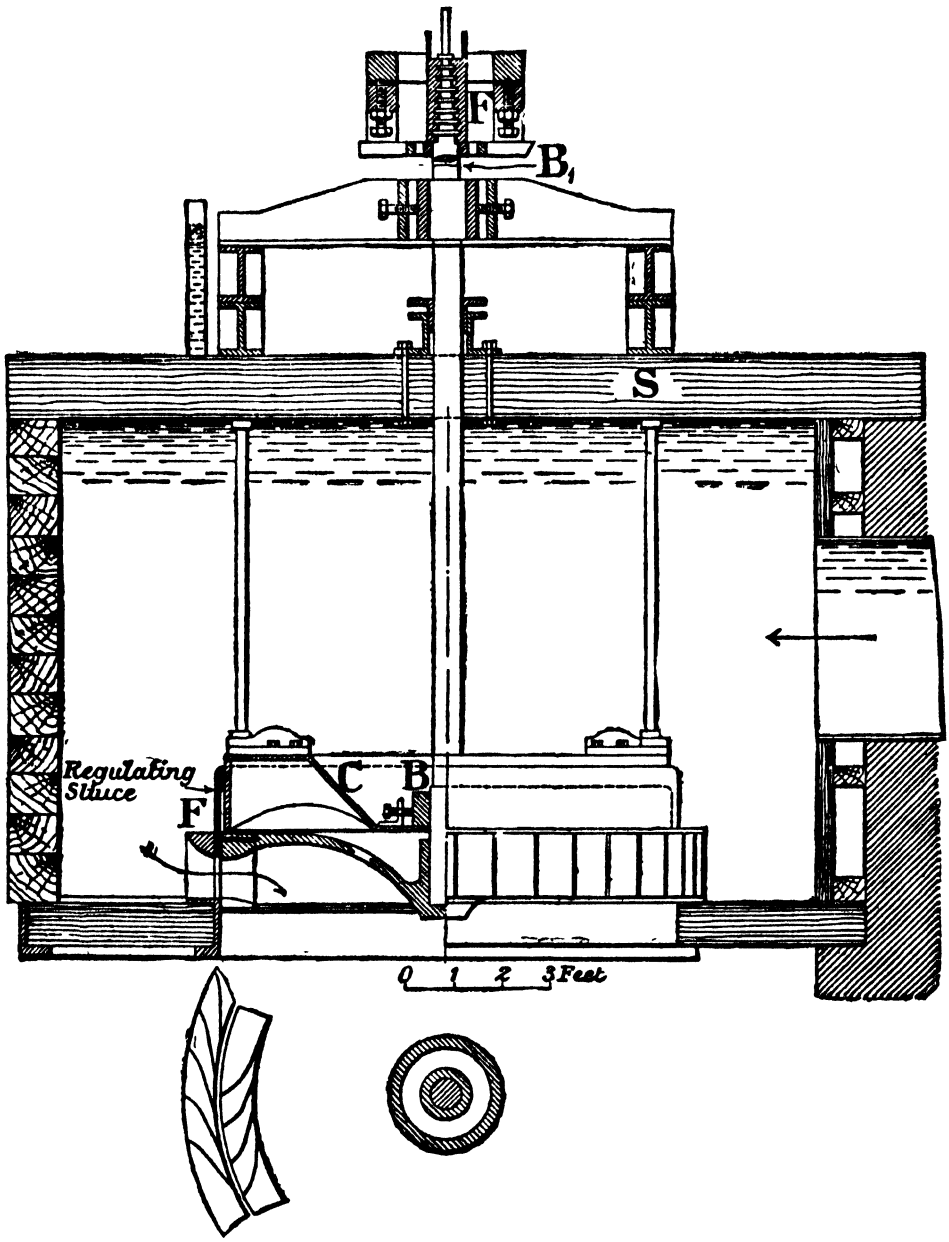

Fig. 204. Francis' Inward flow or Central vent Turbine.

The triangles of velocities at inlet and outlet, Fig. 205, are drawn, exactly as for the outward flow turbine, the only difference being that the velocities v, U, V, V_r and u refer to the outer

periphery, and v_1, U_1, V_1, v_r and u_1 to the inner periphery of the wheel.

The work done on the wheel is

$$\frac{Vv}{g} - \frac{V_1 v_1}{g} \text{ ft. lbs. per lb.,}$$

and neglecting friction,

$$\frac{Vv}{g} - \frac{V_1 v_1}{g} = H - \frac{U_1^2}{2g}.$$

For maximum efficiency, for a given flow through the wheel, U_1 should be radial exactly as for the outward flow turbine.

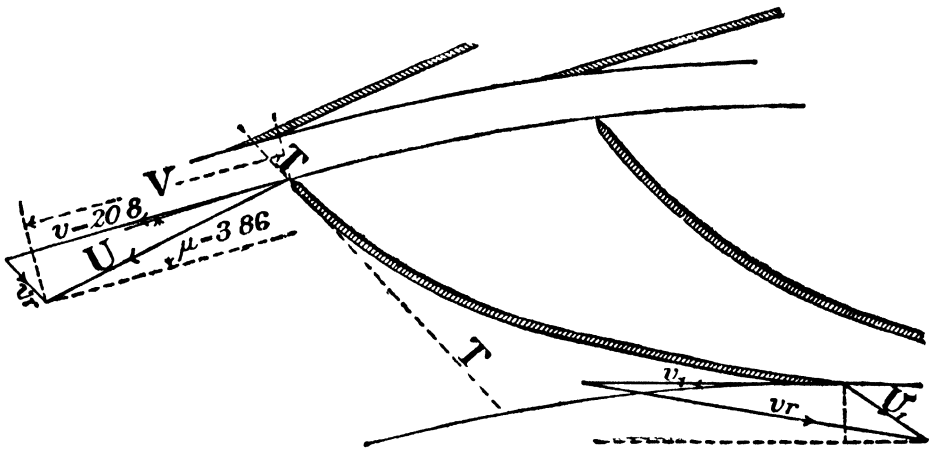

Fig. 205.

The student should work the following example.

The outer diameter of an inward flow turbine wheel is 7·70 feet, and the inner diameter 6·3 feet, the wheel makes 55 revolutions per minute. The head is 14·8 feet, the velocity at inlet is 25 feet per sec., and the radial velocity may be assumed constant and equal to 7·5 feet. Neglecting friction, draw the triangles of velocities at inlet and outlet, and find the directions of the tips of the vanes at inlet and outlet so that there may be no shock and the water may leave radially.

Loss of head by friction. The losses of head by friction are similar to those for an outward flow turbine (see page 313) and the general formula becomes

$$\frac{Vv}{g} - \frac{V_1 v_1}{g} = eH.$$

When the flow is radial at exit,

$$\frac{Vv}{g} = eH.$$

The value of e varying as before between 0·78 and 0·90.

Example (1). An inward flow turbine working under a head of 80 feet has radial blades at inlet, and discharges radially. The angle the tip of the vane makes with the tangent to the wheel at exit is 30 degrees and the radial velocity is constant. The ratio of the radii at inlet and outlet is 1·75. Find the velocity of the inlet circumference of the wheel. Neglect friction.

Since the discharge is radial, the velocity at exit is

$$U_1 = v_1 \tan 30°$$

$$= \frac{v}{1{\cdot}75} \tan 30°.$$

Then $$\frac{Vv}{g} = 80 - \frac{v^2}{1{\cdot}75^2} \frac{\tan^2 30°}{2g},$$

and since the blades are radial at inlet V is equal to v,

therefore $$v^2 = g \,.\, 80 - \frac{v^2}{1{\cdot}75^2} \frac{\tan^2 30°}{2},$$

from which $$v = \sqrt{\frac{32 \times 80}{1{\cdot}0543}},$$

$$= 49{\cdot}3 \text{ ft. per sec.}$$

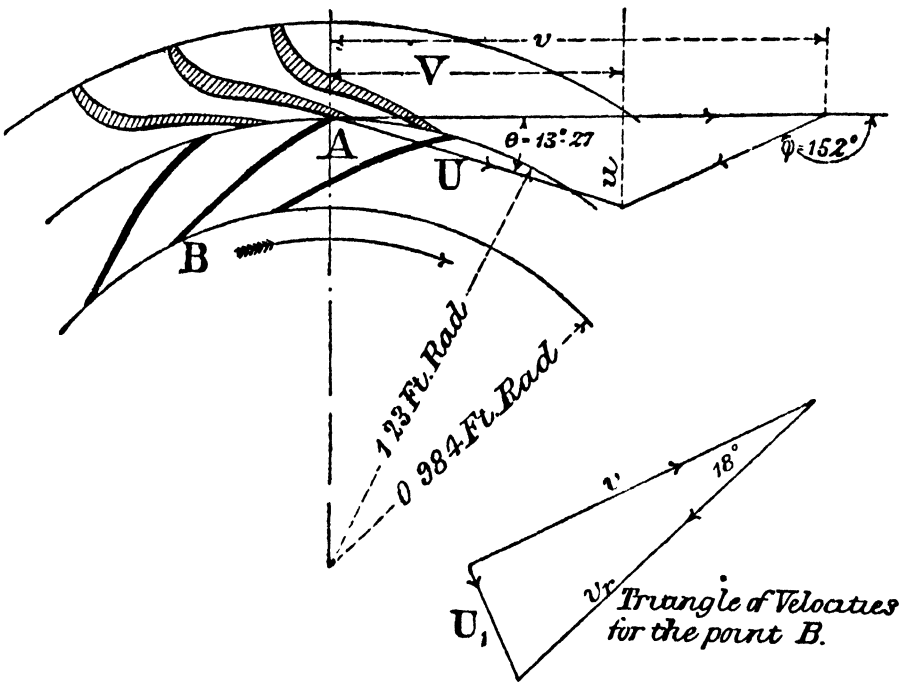

Fig 206.

Example (2) The outer diameter of the wheel of an inward flow turbine of 200 horse-power is 2·46 feet, the inner diameter is 1·968 feet. The wheel makes 300 revolutions per minute. The effective width of the wheel at inlet = 1·15 feet. The head is 39·5 feet and 59 cubic feet of water per second are supplied. The radial velocity with which the water leaves the wheel may be taken as 10 feet per second.

Determine the theoretical hydraulic efficiency E and the actual efficiency e_1 of the turbine, and design suitable vanes.

$$e_1 = \frac{200 \times 550}{39{\cdot}5 \times 59 \times 62{\cdot}5} = 75\,\%.$$

Theoretical hydraulic efficiency

$$E = \frac{39{\cdot}5 - \frac{10^2}{2g}}{39{\cdot}5} = 96\,\%.$$

The radial velocity of flow at inlet,

$$u = \frac{59}{2{\cdot}46 \times \pi \times 1{\cdot}15} = 6{\cdot}7 \text{ feet per sec.}$$

The peripheral velocity

$$v = 2{\cdot}46 \,.\, \pi \times \tfrac{300}{60} = 38{\cdot}6 \text{ feet.}$$

The velocity of whirl V. Assuming a hydraulic efficiency of 85 %, from the formula

$$\frac{Vv}{g} = {\cdot}85\,\mathrm{H},$$

$$V = \frac{39{\cdot}5 \times 32{\cdot}2 \times {\cdot}85}{38{\cdot}6}$$

$$= 28{\cdot}0 \text{ feet per sec.}$$

The angle θ. Since $u = 6{\cdot}7$ ft. per sec. and $V = 28{\cdot}0$ ft. per sec.

$$\tan\theta = \frac{6{\cdot}7}{28} = 0{\cdot}239,$$

$$\theta = 13^\circ\ 27'.$$

The angle ϕ. Since V is less than v, ϕ is greater than 90°.

$$\tan\phi = -\frac{u}{v - V} = -\frac{6{\cdot}7}{12{\cdot}6} = -0{\cdot}531,$$

and

$$\phi = 152^\circ.$$

For the water to discharge radially with a velocity of 10 feet per sec.

$$\tan\alpha = \frac{10 \times 60}{1{\cdot}968 \times \pi \times 300} = 0{\cdot}324,$$

and

$$\alpha = 18^\circ \text{ nearly.}$$

The theoretical vanes are shown in Fig. 206.

Example (3). Find the values of ϕ and α on the assumption that e is 0·80.

Thomson's inward flow turbine. In 1851 Professor James Thomson invented an inward flow turbine, the wheel of which was surrounded by a large chamber set eccentrically to the wheel, as shown in Figs. 207 to 210.

Between the wheel and the chamber is a parallel passage, in which are four guide blades G, pivoted on fixed centres C and which can be moved about the centres C by bell crank levers, external to the casing, and connected together by levers as shown in Fig. 207. The water is distributed to the wheel by these guide blades, and by turning the worm quadrant Q by means of the worm, the supply of water to the wheel, and thus the power of the turbine, can be varied. The advantage of this method of regulating the flow, is that there is no sudden enlargement from the guide passages to the wheel, and the efficiency at part load is not much less than at full load.

Figs. 209 and 210 show an enlarged section and part sectional elevation of the turbine wheel, and one of the guide blades G. The details of the wheel and casing are made slightly different from those shown in Figs. 207 and 208 to illustrate alternative methods.

The sides or crowns of the wheel are tapered, so that the peripheral area of the wheel at the discharge is equal to the peripheral area at inlet. The radial velocities of flow at inlet and outlet are, therefore, equal.

The inner radius r in Thomson's turbine, and generally in turbines of this class made by English makers, is equal to one-half the external radius R.

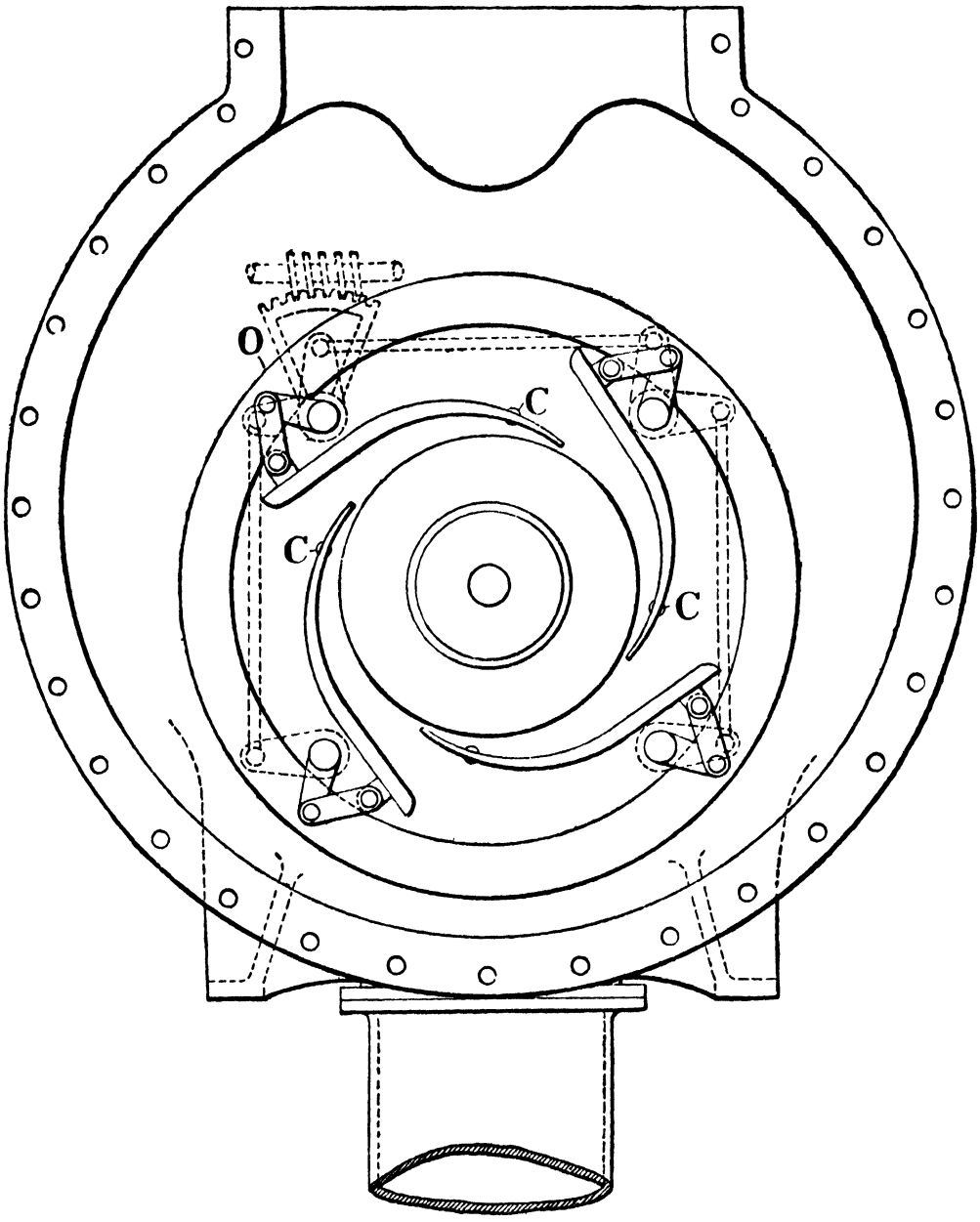

Fig. 207. Guide blades and casing of Thomson Inward Flow Turbine.

The exhaust for the turbine shown takes place down two suction tubes, but the turbine can easily be adapted to work below the tail water level.

As will be seen from the drawing the vanes of the wheel are made alternately long and short, every other one only continuing from the outer to the inner periphery.

The triangles of velocities for the inlet and outlet are shown in Fig. 211, the water leaving the wheel radially.

The path of the water through the wheel, relative to the fixed casing, is also shown and was obtained by the method described on page 312.

Inward flow turbines with adjustable guide blades, as made by the continental makers, have a much greater number of guide blades (see Fig. 233, page 352).

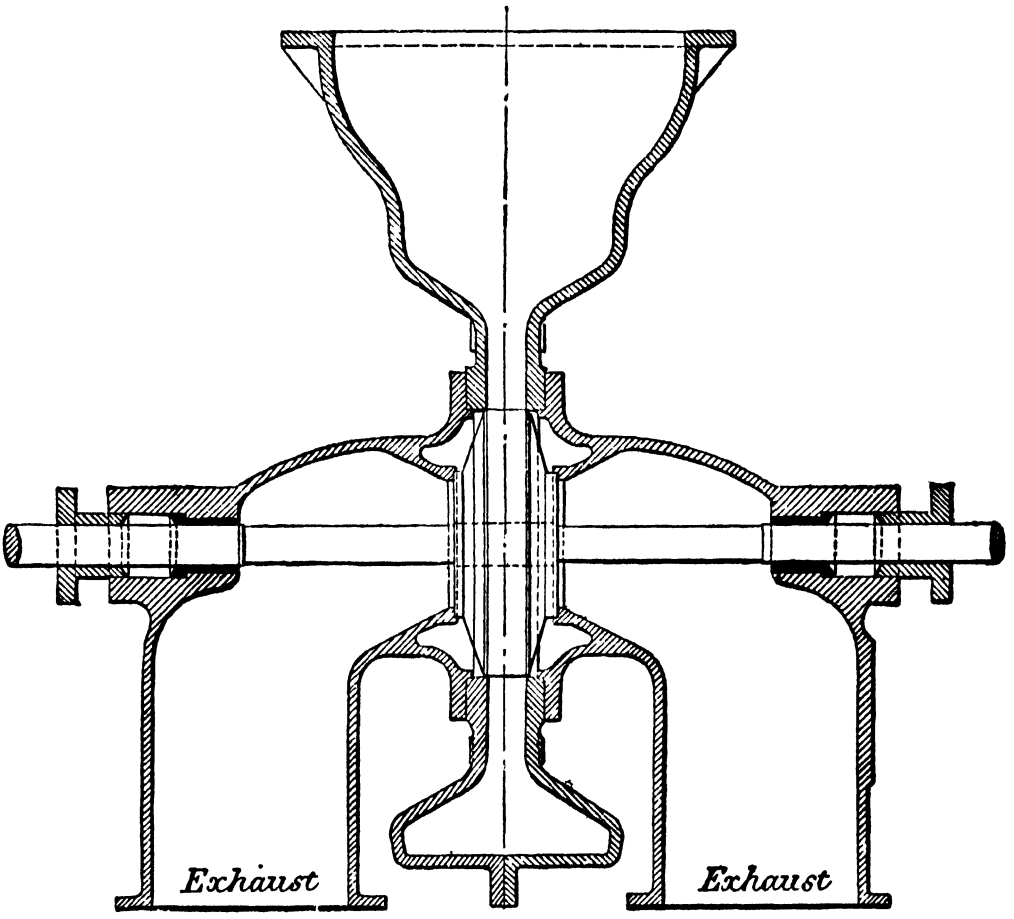

Fig. 208. Section through wheel and casing of Thomson Inward Flow Turbine.

188. Some actual inward flow turbines.

A later form of the Francis inward flow turbine as designed by Pictet and Co., and having a horizontal shaft, is shown in Fig. 212.

The wheel is double and is surrounded by a large chamber from which water flows through the guides G to the wheel W. After leaving the wheel, exhaust takes place down the two suction tubes S, thus allowing the turbine to be placed well above the tail water while utilising the full head.

The regulating sluice F consists of a steel cylinder, which slides in a direction parallel to the axis between the wheel and guides.

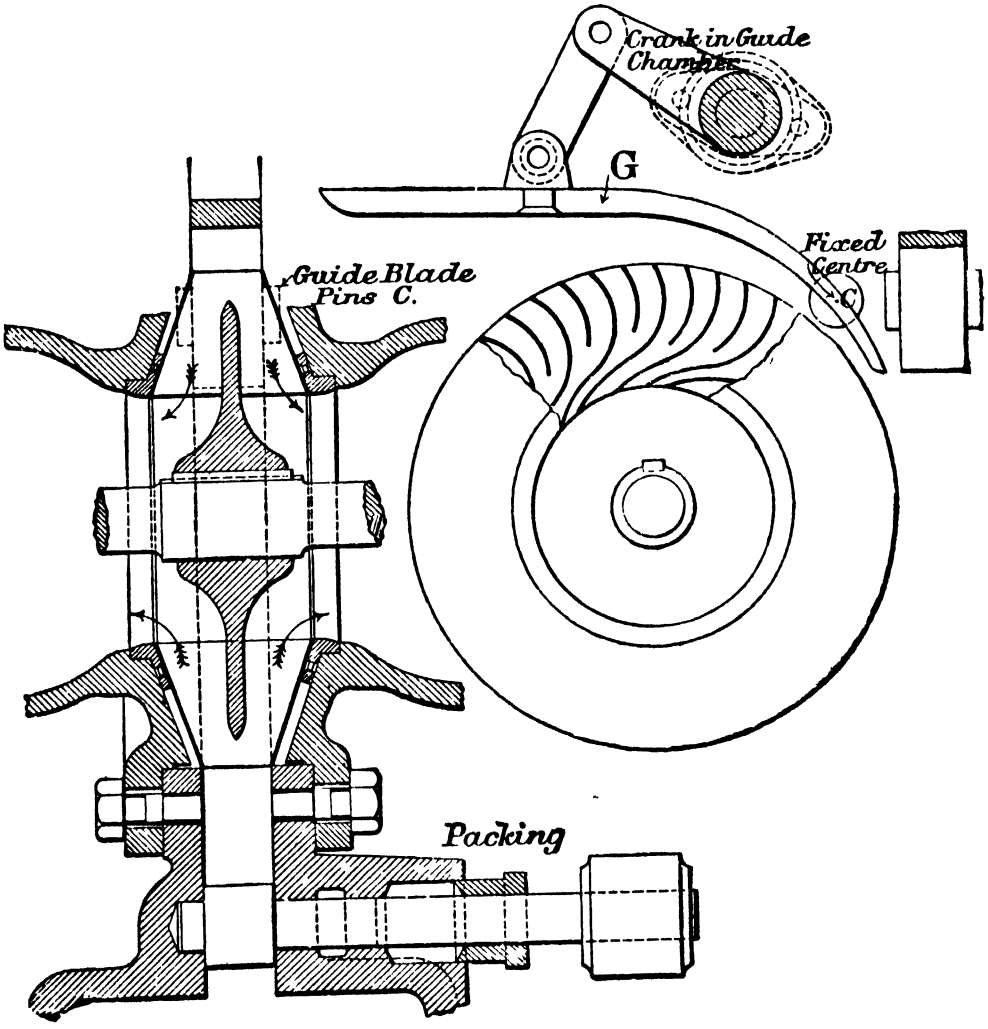

Fig. 209. Fig. 210.

Detail of wheel and guide blade of Thomson Inward Flow Turbine.

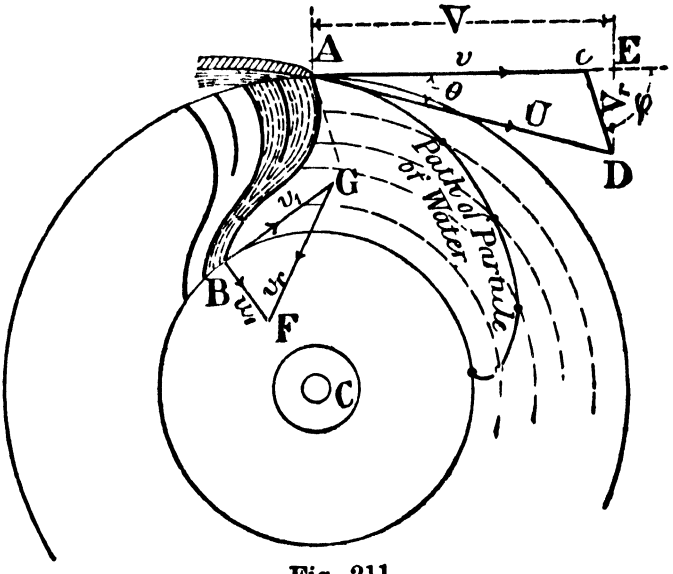

Fig. 211.

The wheel is divided into five separate compartments, so that at any time only one can be partially closed, and loss of head by contraction and sudden enlargement of the stream, only takes place in this one compartment.

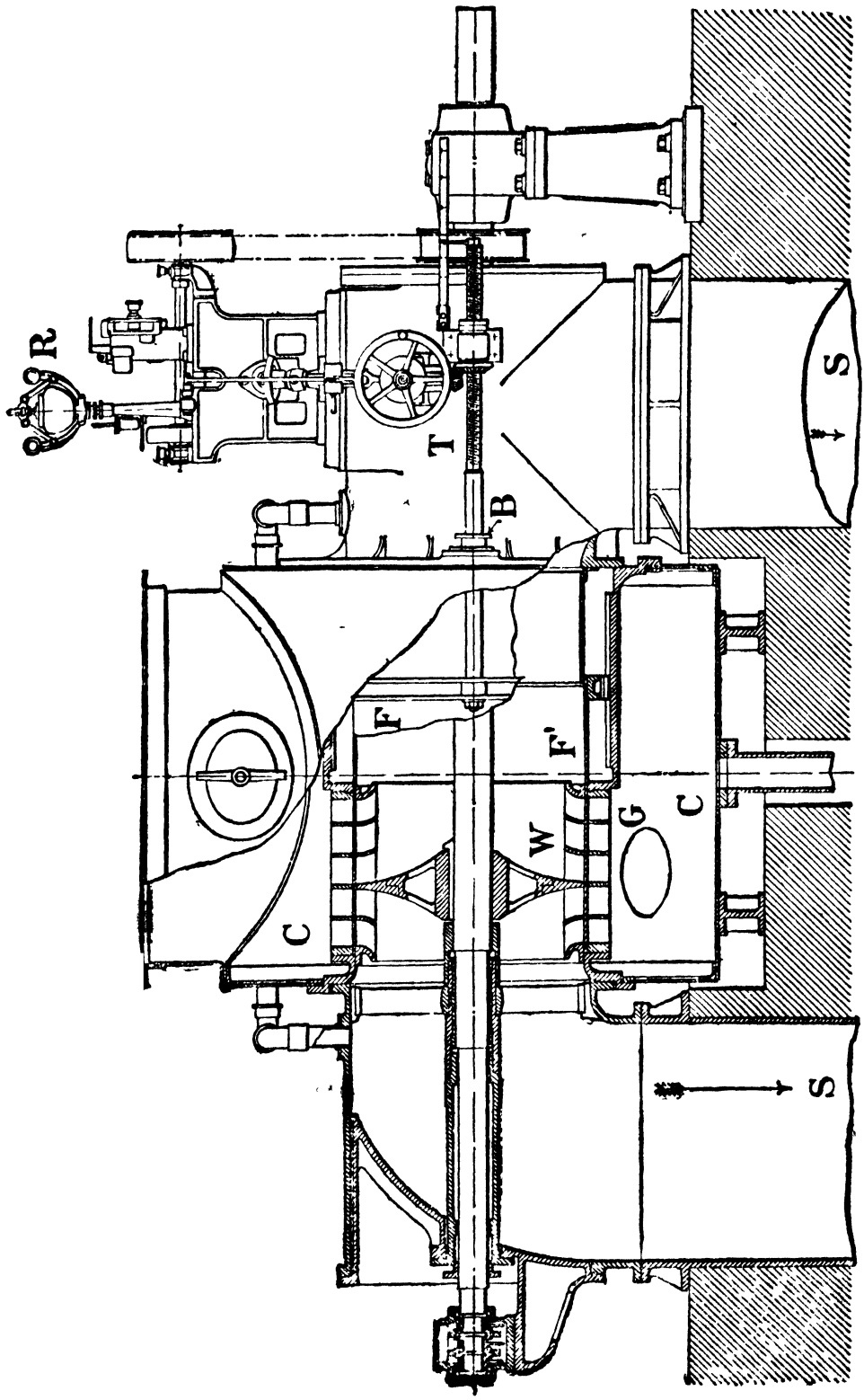

Fig. 212. Horizontal Inward Flow Turbine. (Pictet and Co.)

The sluice F is moved by two screws T, which slide through stuffing boxes B, and which can be controlled by hand or by the governor R.

Inward flow turbine for low falls and variable head. The turbine shown in Fig. 213 is an example of an inward flow turbine suitable to low falls and variable head. It has a vertical axis and works drowned. The wheel and the distributor surrounding the wheel are divided into five stages, the two upper stages being shallower than the three lower ones, and all of which stages can

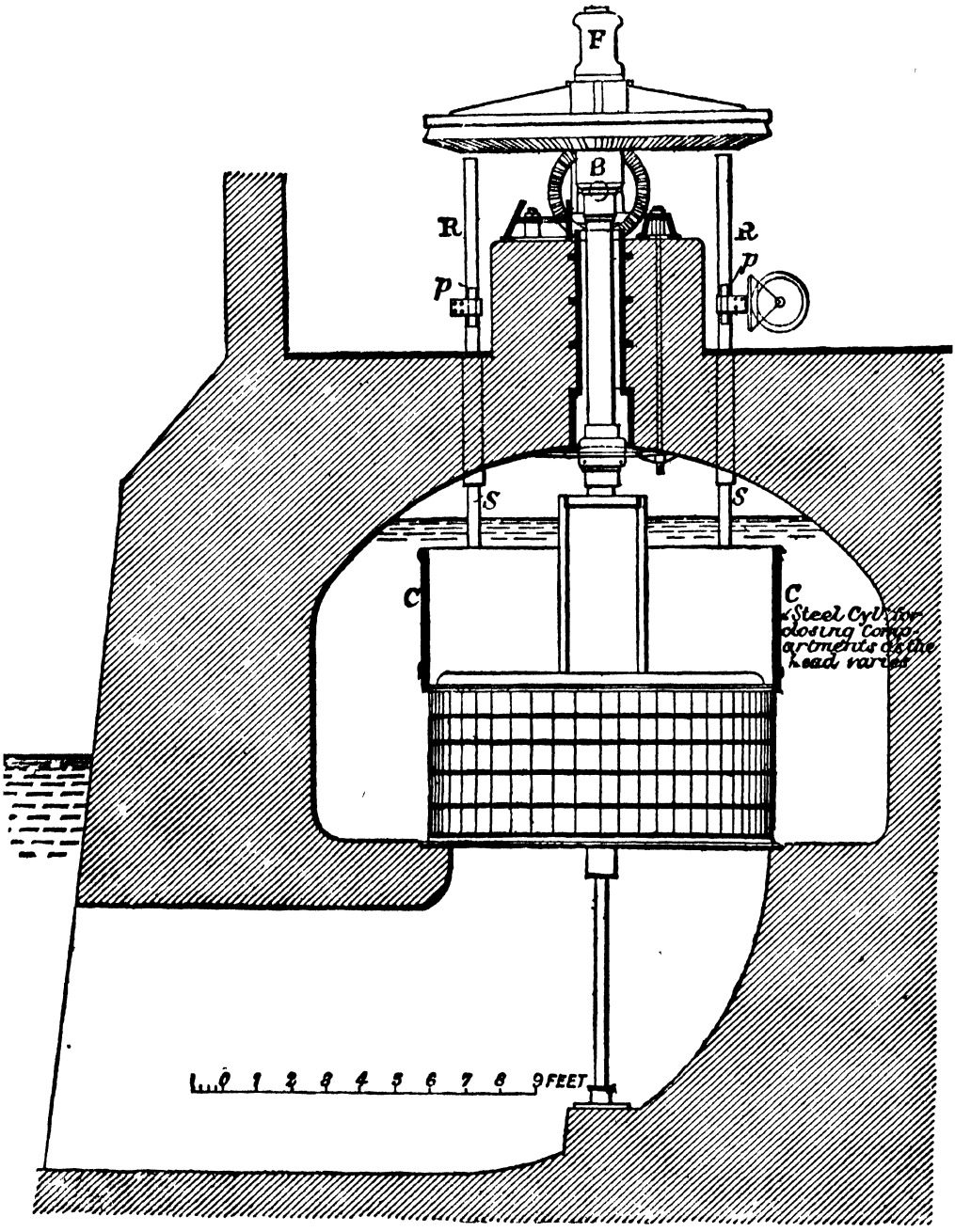

Fig. 213. Inward Flow Turbine for a low and variable fall. (Pictet and Co.)

be opened or closed as required by the steel cylindrical sluice CC surrounding the distributor.

When one of the stages is only partially closed by the sluice, a loss of efficiency must take place, but the efficiency of this one stage only is diminished, the stages that are still open working with their full efficiency. With this construction a high efficiency of the turbine is maintained for partial flow. With normal flows, and a head of about 6·25 feet, the three lower stages only are necessary to give full power, and the efficiency is then a maximum. In times of flood there is a large volume of water available, but the tail water rises so that the head is only about 4·9 feet, the two upper stages can then be brought into operation to accommodate a larger flow, and thus the same power may be obtained under a less head. The efficiency is less than when the three stages only are working, but as there is plenty of water available, the loss of efficiency is not serious.

The cylinder C is carried by four vertical spindles S, having racks R fixed to their upper ends. Gearing with these racks, are pinions p, Fig. 213, all of which are worked simultaneously by the regulator, or by hand. A bevel wheel fixed to the vertical shaft gears with a second bevel wheel on a horizontal shaft, the velocity ratio being 3 to 1.

189. The best peripheral velocity for inward and outward flow turbines.

When the discharge is radial, the general formula, as shown on page 315, is

$$\frac{Vv}{g} = eH = 0{\cdot}78 \text{ to } 0{\cdot}90H \ldots\ldots\ldots\ldots\ldots\ldots (1).$$

If the blades are radial at inlet, for no shock, v should be equal to V, and

$$v^2 = V^2 = 0{\cdot}39 \text{ to } 0{\cdot}45 \times 2gH,$$

or

$$v = V = 0{\cdot}624 \text{ to } 0{\cdot}67\sqrt{2gH}.$$

This is sometimes called the best velocity for v, but it should be clearly understood that it is only so when the blades are radial at inlet.

190. Experimental determination of the best peripheral velocity for inward and outward flow turbines.

For an outward flow turbine, working under a head of 14 feet, with blades radial at inlet, Francis* found that when v was

$$0{\cdot}626\sqrt{2gH},$$

* Lowell, *Hydraulic Experiments.*

the efficiency was a maximum and equal to 79·37 per cent. The efficiency however was over 78 per cent. for all values of v between $0{\cdot}545\sqrt{2gH}$ and $\cdot 671\sqrt{2gH}$. If 3 per cent. be allowed for the mechanical losses the hydraulic efficiency may be taken as 82·4 per cent.

From the formula $\frac{Vv}{g} = \cdot 824H$, and taking V equal to v,

$$v = \cdot 64\sqrt{2gH},$$

so that the result of the experiment agrees well with the formula.

For an inward flow turbine having vanes as shown in Fig. 205, the total efficiency was over 79 per cent. for values of v between $0{\cdot}624\sqrt{2gH}$ and $0{\cdot}708\sqrt{2gH}$, the greatest efficiency being 79·7 per cent. when v was $0{\cdot}708\sqrt{2gH}$ and again when v was $\cdot 637\sqrt{2gH}$.

It will be seen from Fig. 205 that although the tip of the vane at the convex side is nearly radial, the general direction of the vane at inlet is inclined at an angle greater than 90 degrees to the direction of motion, and therefore for no shock V should be less than v.

When v was $\cdot 708\sqrt{2gH}$, V, Fig. 205, was less than v. The value of V was deduced from the following data, which is also useful as being taken from a turbine of very high efficiency.

Diameter of wheel 9·338 feet.

Width between the crowns at inlet 0·999 foot.

There were 40 vanes in the wheel and an equal number of fixed guides external to the wheel.

The minimum width of each guide passage was 0·1467 foot and the depth 1·0066 feet.

The quantity of water supplied to the wheel per second was 112·525 cubic feet, and the total fall of the water was 13·4 feet. The radial velocity of flow u was, therefore, 3·86 feet per second.

The velocity through the minimum section of the guide passage was 19 feet per second.

When the efficiency was a maximum, v was 20·8 feet per sec. Then the radial velocity of flow at inlet to the wheel being 3·86 feet, and U being taken as 19 feet per second, the triangle of velocities at inlet is ABC, Fig. 205, and V is 18·4 feet per sec.

If it is assumed that the water leaves the wheel radially, then

$$eH = \frac{Vv}{g} = 11{\cdot}85 \text{ feet.}$$

The efficiency e should be $\frac{11{\cdot}85}{13{\cdot}4} = 88{\cdot}5$ per cent., which is 9 per cent. higher than the actual efficiency.

The actual efficiency however includes not only the fluid losses but also the mechanical losses, and these would probably be from 2 to 8 per cent., and the actual work done by the turbine on the shaft is probably between 80 and 86·5 per cent. of the work done by the water.

191. Value of e to be used in the formula $\frac{Vv}{g} = eH$.

In general, it may be said that, in using the formula $\frac{Vv}{g} = eH$, the value of e to be used in any given case is doubtful, as even though the efficiency of the class of turbines may be known, it is difficult to say exactly how much of the energy is lost mechanically and how much hydraulically.

A trial of a turbine without load, would be useless to determine the mechanical efficiency, as the hydraulic losses in such a trial would be very much larger than when the turbine is working at full load. By revolving the turbine without load by means of an electric motor, or through the medium of a dynamometer, the work to overcome friction of bearings and other mechanical losses could be found. At all loads, from no load to full load, the frictional resistances of machines are fairly constant, and the mechanical losses for a given class of turbines, at the normal load for which the vane angles are calculated, could thus approximately be obtained. If, however, in making calculations the difference between the actual and the hydraulic efficiency be taken as, say, 5 per cent., the error cannot be very great, as a variation of 5 per cent. in the value assumed for the hydraulic efficiency e, will only make a difference of a few degrees in the calculated value of the angle ϕ.

The best value for e, for inward flow turbines, is probably 0·80, and experience shows that this value may be used with confidence.

Example. Taking the data as given in the example of section 184, and assuming an efficiency for the turbine of 75 per cent., the horse-power is

$$N = \frac{215 \times 62\ 4 \times 141{\cdot}5 \times {\cdot}75 \times 60}{33{,}000}$$

$$= 2600 \text{ horse-power.}$$

If the hydraulic efficiency is supposed to be 80 per cent., the velocity of whirl V should be

$$V = \frac{{\cdot}8g\,.\,H}{v} = \frac{0{\cdot}8\,.\,32\,.\,141{\cdot}5}{69}$$

$$= 52 \text{ feet per sec.}$$

Then $$\tan\phi = \frac{18{\cdot}35}{52-69} = \frac{-18\ 35}{17},$$

and $$\phi = 132^\circ\ 47'.$$

Now suppose the turbine to be still generating 2600 horse-power, and to have an efficiency of 80 per cent., and a hydraulic efficiency of 85 per cent.

Then the quantity of water required per second, is

$$Q = \frac{215 \times 0{\cdot}75}{0\ 8} = 200 \text{ cubic feet per sec.}$$

and the radial velocity of flow at inlet will be

$$u = \frac{18\ 35 \times 200}{215} = 17{\cdot}1 \text{ ft. per sec.}$$

$$V = \frac{{\cdot}85\ \ 32\ .\ 141{\cdot}5}{69} = 55{\cdot}4 \text{ ft. per sec.}$$

Then $$\tan\phi = \frac{17{\cdot}1}{55{\cdot}4 - 69} = \frac{-17{\cdot}1}{13{\cdot}6}$$

$$= 128^\circ.\ 24'.$$

192. The ratio of the velocity of whirl V to the velocity of the inlet periphery v.

Experience shows that, consistent with Vv satisfying the general formula, the ratio $\frac{v}{V}$ may vary between very wide limits without considerably altering the efficiency of the turbine.

Table XXXVII shows actual values of the ratio $\frac{v}{\sqrt{2gH}}$ taken from a number of existing turbines, and also corresponding values

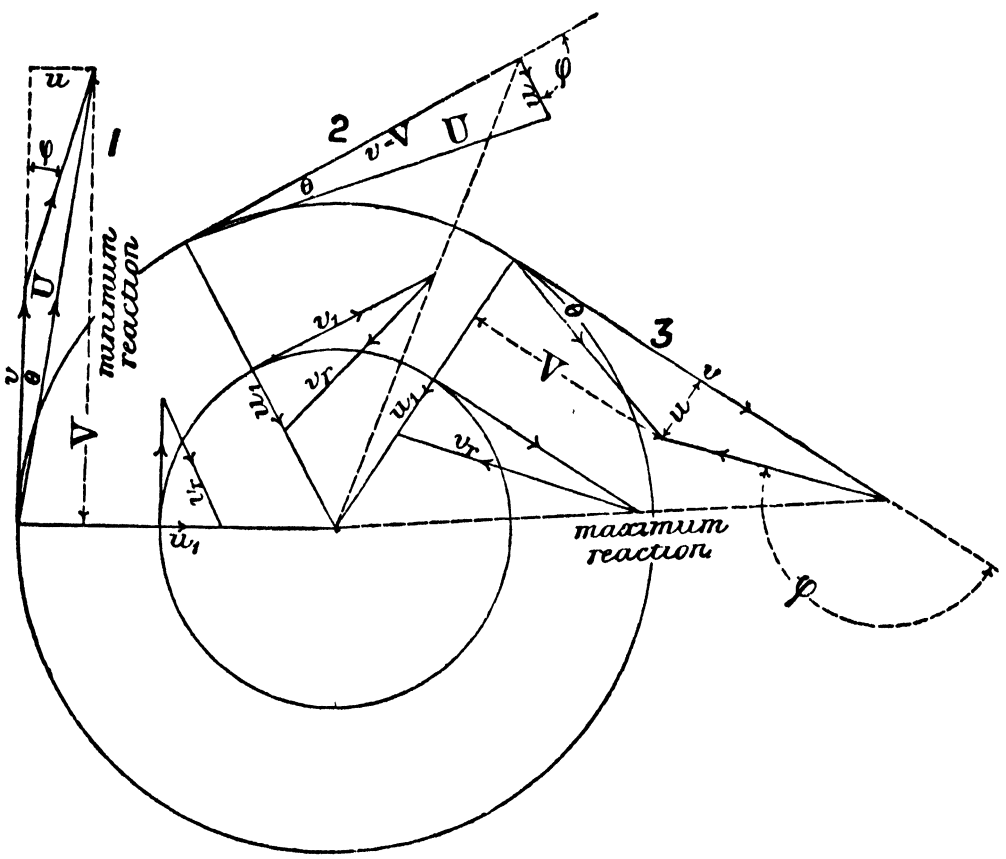

Fig. 214.

of $\frac{V}{\sqrt{2gH}}$, V being calculated from $\frac{Vv}{g} = 0{\cdot}8H$. The corresponding variation in the angle ϕ, Fig. 214, is from 20 to 150 degrees.

For a given head, v may therefore vary within wide limits, which allows a very large variation in the angular velocity of the wheel to suit particular circumstances.

TABLE XXXVII.

Showing the heads, and the velocity of the receiving circumference v for some existing inward and outward, and mixed flow turbines.

	H feet	v feet per sec.	$\sqrt{2gH}$	Ratio $\frac{v}{\sqrt{2gH}}$	H.P.	Ratio $\frac{V}{\sqrt{2gH}}$ V being calculated from $\frac{Vv}{g} = \cdot 8H$
Inward flow:						
Niagara Falls*	146	70	96·8	0·72	5000	0·555
Rheinfelden	14·8	22	30·7	0·71	840	0·565
By Theodor Bell and Co.	28·4	39	42·6	0·91		0·44
"	60·4	32·2	62·3	0·52		0·77
Pictet and Co.	183·7	51·1	76·8	0·47	300	0·85
"	134·5	46·6	65·6	0·505	300	0·79
"	6·25	16·6	20	0·83		0·48
"	30	25·75	44	0·58	700	0·69
"		38·5	50·3	0·77	200	0·52
Ganz and Co.	112	64·3	84·6	0·54		0·74
"	225	64·7	120	0·54	682	0·58
Ricter and Co.	10·66	15·2	26	0·585	30	0·69
Outward flow:						
Niagara Falls	141·5	69	95·2	0·725	5000	0·55
Pictet and Co.	130·5	69	91·6	0·750		0·53
Ganz and Co.	95·1	38·7	78·0	0·495	290	0·81
"	223	55·6	120·0	0·46	1200	0·87

* Escher Wyss and Co.

For example, if a turbine is required to drive alternators direct, the number of revolutions will probably be fixed by the alternators, while, as shown later, the diameter of the wheel is practically fixed by the quantity of water, which it is required to pass through the wheel, consistent with the peripheral velocity of the wheel, not being greater than 100 feet per second, unless, as in the turbine described on page 373, special precautions are taken. This latter condition may necessitate the placing of two or more wheels on one shaft.

Suppose then, the number of revolutions of the wheel to be given and d is fixed, then v has a definite value, and V must be made to satisfy the equation

$$\frac{Vv}{g} = e\mathrm{H}.$$

Fig. 214 is drawn to illustrate three cases for which Vv is constant. The angles of the vanes at outlet are the same for all three, but the guide angle θ and the vane angle ϕ at inlet vary considerably.

193. The velocity with which water leaves a turbine.

In a well-designed turbine the velocity with which the water leaves the turbine should be as small as possible, consistent with keeping the turbine wheel and the down-take within reasonable dimensions.

In actual turbines the head lost due to this velocity head varies from 2 to 8 per cent. If a turbine is fitted with a suction pipe the water may be allowed to leave the wheel itself with a fairly high velocity and the discharge pipe can be made conical so as to allow the actual discharge velocity to be as small as desired. It should however be noted that if the water leaves the wheel with a high velocity it is more than probable that there will be some loss of head due to shock, as it is difficult to ensure that water so discharged shall have its velocity changed gradually.

194. Bernoulli's equations applied to inward and outward flow turbines neglecting friction.

Centrifugal head impressed on the water by the wheel. The theory of the reaction turbines is best considered from the point of view of Bernoulli's equations; but before proceeding to discuss them in detail, it is necessary to consider the "centrifugal head" impressed on the water by the wheel.

This head has already been considered in connection with the Scotch turbine, page 303.

Let r, Fig. 216, be the internal radius of a wheel, and R the external radius.

At the internal circumference let the wheel be covered with a cylinder c so that there can be no flow through the wheel, and let it be supposed that the wheel is made to revolve at the angular velocity ω which it has as a turbine, the wheel being full of water and surrounded by water at rest, the pressure outside the wheel being sufficient to prevent the water being whirled out of the wheel. Let d be the depth of the wheel between the crowns. Consider any element of a ring of radius r_0 and thickness dr, and subtending a small angle θ at the centre C, Fig. 216.

The weight of the element is

$$wr_0\theta \,.\, dr \,.\, d,$$

and the centrifugal force acting on the element is

$$\frac{wr_0\theta \,.\, dr \,.\, d \,.\, \omega^2 r_0}{g} \text{ lbs.}$$

Let p be the pressure per unit area on the inner face of the element and $p + \partial p$ on the outer.

Then
$$\partial p = \frac{wr_0\theta \,.\, dr \,.\, d \,.\, \omega^2 r_0}{g \,.\, r_0\theta \,.\, d}$$
$$= \frac{w}{g} \,.\, \omega^2 r_0 dr.$$

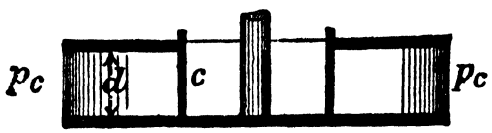

Fig. 215.

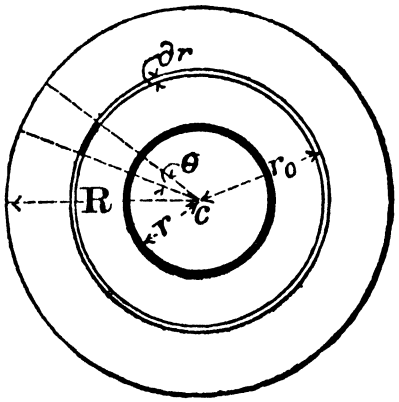

Fig. 216.

The increase in the pressure, due to centrifugal forces, between r and R is, therefore,

$$p_c = \int_r^R \frac{w\omega^2}{g} r_0 dr \,. = \frac{w}{2g}\omega^2 (R^2 - r^2)$$

and
$$\frac{p_c}{w} = \frac{\omega^2}{2g}(R^2 - r^2) = \frac{v^2}{2g} - \frac{v_1^2}{2g}.$$

For equilibrium, therefore, the pressure in the water surrounding the wheel must be p_0.

If now the cylinder c be removed and water is allowed to flow through the wheel, either inwards or outwards, this centrifugal head will always be impressed upon the water, whether the wheel is driven by the water as a turbine, or by some external agency, and acts as a pump.

Bernoulli's equations. The student on first reading these equations will do well to confine his attention to the inward flow turbine, Fig. 217, and then read them through again, confining his attention to the outward flow turbine, Fig. 191.

Let p be the pressure at A, the inlet to the wheel, or in the clearance between the wheel and the guides, p_1 the pressure at the outlet B, Fig. 217, and p_a the atmospheric pressure, in pounds per square foot. Let H be the total head, and H_0 the statical head at the centre of the wheel. The triangles of velocities are as shown in Figs. 218 and 219.

Then at A

$$\frac{p_a}{w} + H_0 = \frac{p}{w} + \frac{U^2}{2g} \quad \text{.....(1).}$$

Between B and A the wheel impresses upon the water the centrifugal head

$$\frac{v^2}{2g} - \frac{v_1^2}{2g},$$

v being greater than v_1 for an inward flow turbine and less for the outward flow.

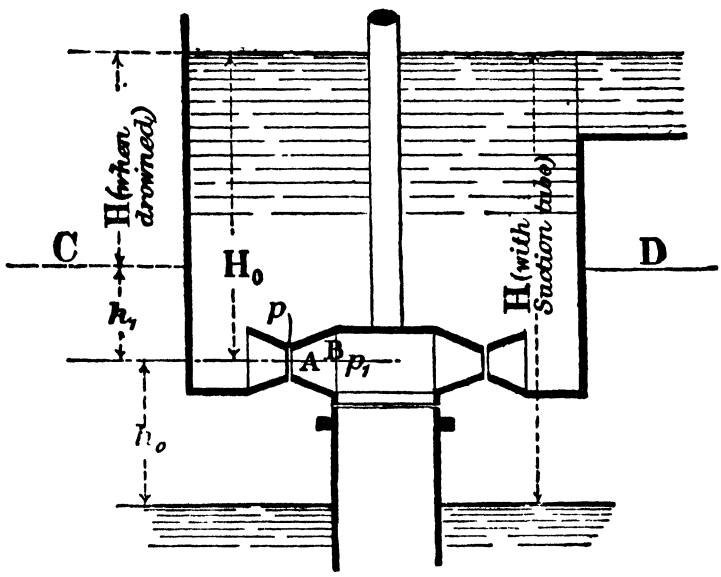

Fig. 217.

Consider now the total head relative to the wheel at A and B.

The velocity head at A is $\frac{V_r^2}{2g}$ and the pressure head is $\frac{p}{w}$, and at B the velocity and pressure heads are $\frac{v_r^2}{2g}$ and $\frac{p_1}{w}$ respectively.

If no head were impressed on the water as it flows through the wheel, the pressure head plus the velocity head at A and B would be equal to each other. But between A and B there is impressed on the water the centrifugal head, and therefore,

$$\frac{p_1}{w} + \frac{v_r^2}{2g} + \frac{v^2}{2g} - \frac{v_1^2}{2g} = \frac{p}{w} + \frac{V_r^2}{2g} \quad \text{.....(2).}$$

This equation can be used to deduce the fundamental equation,

$$\frac{Vv}{g} - \frac{V_1 v_1}{g} = h \quad \text{.....(3).}$$

From the triangles CDE and ADE, Fig. 218,

$$V_r^2 = (V - v)^2 + u^2 \text{ and } V^2 + u^2 = U^2,$$

and from the triangle BFG, Fig 219,

$$v_r^2 = (v_1 - V_1)^2 + u_1^2 \text{ and } V_1^2 + u_1^2 = U_1^2.$$

Therefore by substitution in (2),

$$\frac{p_1}{w} + \frac{(v_1 - V_1)^2}{2g} + \frac{v^2}{2g} - \frac{v_1^2}{2g} + \frac{u_1^2}{2g} = \frac{p}{w} + \frac{(V - v)^2}{2g} + \frac{u^2}{2g} \quad \text{...(4).}$$

From which

$$\frac{p_1}{w} - \frac{v_1 V_1}{g} + \frac{U_1^2}{2g} = \frac{p}{w} + \frac{U^2}{2g} - \frac{vV}{g},$$

and

$$\frac{vV}{g} - \frac{v_1 V_1}{g} = \frac{p}{w} - \frac{p_1}{w} + \frac{U^2}{2g} - \frac{U_1^2}{2g} \quad \text{.....(5).}$$

Substituting for $\frac{p}{w} + \frac{U^2}{2g}$ from (1)

$$\frac{vV}{g} - \frac{v_1 V_1}{g} = H_0 + \frac{p_a}{w} - \frac{p_1}{w} - \frac{U_1^2}{2g} \quad \text{.....(6).}$$

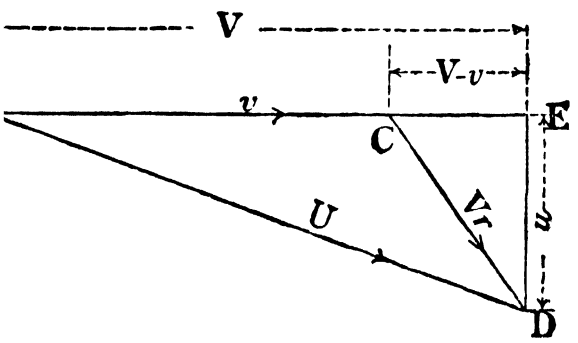

Fig. 218.

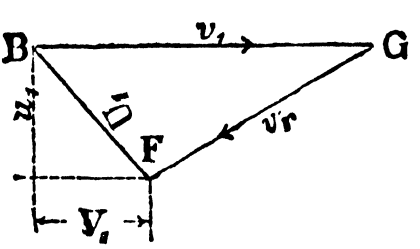

Fig. 219.

Wheel in suction tube. If the centre of the wheel is h_0 feet above the surface of the tail water, and U_0 is the velocity with which the water leaves the down-pipe, then

$$\frac{p_a}{w} + \frac{U_0^2}{2g} = h_0 + \frac{p_1}{w} + \frac{U_1^2}{2g}.$$

Substituting for $\frac{p_1}{w} + \frac{U_1^2}{2g}$ in (6),

$$\frac{vV}{g} - \frac{v_1 V_1}{g} = H_0 + \frac{p_a}{w} - \frac{p_a}{w} + h_0 - \frac{U_0^2}{2g}$$

$$= H - \frac{U_0^2}{2g}.$$

If V is 0, $$\frac{vV}{g} = H - \frac{U_0^2}{2g} = h.$$

The wheel can therefore take full advantage of the head H even though it is placed at some distance above the level of the tail water.

Drowned wheel. If the level of the tail water is CD, Fig. 217, or the wheel is drowned, and h_1 is the depth of the centre of the wheel below the tail race level,

$$\frac{p_1}{w} = h_1 + \frac{p_a}{w},$$

and the work done on the wheel per pound of water is again

$$\frac{vV}{g} - \frac{V_1 v_1}{g} = H - \frac{U_1^2}{2g} = h.$$

If V_1 is 0, $$\frac{vV}{g} = h.$$

From equation (5),

$$\frac{vV}{g} - \frac{v_1 V_1}{g} = \frac{p}{w} - \frac{p_1}{w} + \frac{U^2}{2g} - \frac{U_1^2}{2g},$$

so that the work done on the wheel per pound is the difference between the pressure head plus the velocity head at entrance and the pressure head plus velocity head at exit.

In an impulse turbine p and p_1 are equal, and the work done is then the change in the kinetic energy of the jet when it strikes and when it leaves the wheel.

A special case arises when p_1 is equal to p. In this case a considerable clearance may be allowed between the wheel and the fixed guide without danger of leakage.

Equation (2), for this case, becomes

$$\frac{V_r^2}{2g} = \frac{v_r^2}{2g} + \frac{v^2}{2g} - \frac{v_1^2}{2g},$$

and if at exit v_r is made equal to v_1, or the triangle BFG, Fig. 219, is isosceles,

$$\frac{V_r^2}{2g} = \frac{v^2}{2g},$$

and the triangle of velocities at entrance is also isosceles.

The pressure head at entrance is

$$\frac{p_a}{w} + H_0 - \frac{U^2}{2g},$$

and at exit is either $\frac{p_a}{w} + h_1$, or $\frac{p_a}{w} - h_0$.

Therefore, since the pressures at entrance and exit are equal,

$$\frac{U^2}{2g} = H_0 - h_1 = H,$$

or else

$$H_0 + h_0 = H.$$

The water then enters the wheel with a velocity equal to that due to the total head H, and the turbine becomes a free-deviation or impulse turbine.

195. Bernoulli's equations for the inward and outward flow turbines including friction.

If H_f is the loss of head in the penstock and guide passages, h_f the loss of head in the wheel, h_e the loss at exit from the wheel and in the suction pipe, and U_1 the velocity of exhaust,

$$\frac{p}{w} + \frac{U^2}{2g} = H_0 + \frac{p_a}{w} - H_f \text{.....} (1),$$

$$\frac{p_1}{w} + \frac{v_r^2}{2g} + \frac{v^2}{2g} - \frac{v_1^2}{2g} = \frac{p}{w} + \frac{V_r^2}{2g} - h_f \text{ .....} (2),$$

and

$$\frac{p_1}{w} = \frac{p_a}{w} + h_e - h_1 \text{.....} (3),$$

from which

$$\frac{vV}{g} = H - \left(\frac{U_1^2}{2g} + h_f + H_f + h_e\right) \text{ .....} (4).$$

If the losses can be expressed as a fraction of H, or equal to KH, then

$$\frac{Vv}{g} = (1 - K)\,H = eH$$
$$= 0{\cdot}78H \text{ to } 0{\cdot}90H^*.$$

196. Turbine to develop a given horse-power.

Let H be the total head in feet under which the turbine works.

Let n be the number of revolutions of the wheel per minute.

Let Q be the number of cubic feet of water per second required by the turbine.

Let E be the theoretical hydraulic efficiency.

Let e be the hydraulic efficiency.

Let e_m be the mechanical efficiency.

Let e_1 be the actual efficiency including mechanical losses.

Let u_1 be the radial velocity with which the water leaves the wheel.

Let D be the diameter of the wheel in feet at the inlet circumference and d the diameter at the outlet circumference.

Let B be the width of the wheel in feet between the crowns at the inlet circumference, and b be the width between the crowns at the outlet circumference.

Let N be the horse-power of the turbine.

* See page 315.

The number of cubic feet per second required is

$$Q = \frac{N \,.\, 33{,}000}{e_1 H \,.\, 62{\cdot}4 \,.\, 60} \quad \text{.....(1).}$$

A reasonable value for e_1 is 75 per cent.

The velocity U_0 with which the water leaves the turbine, since

$$E = \frac{H - \frac{U_0^2}{2g}}{H},$$

is

$$U_0 = \sqrt{2g\,(1 - E)\,H} \text{ ft. per sec. } \text{.....(2).}$$

If it be assumed that this is equal to u_1, which would of necessity be the case when the turbine works drowned, or exhausts into the air, then, if t is the peripheral thickness of the vanes at outlet and m the number of vanes,

$$(\pi d - mt)\, U_0 b = Q.$$

If U_0 is not equal to u_1, then

$$(\pi d - mt)\, u_1 b = Q \quad \text{.....(3).}$$

The number of vanes m and the thickness t are somewhat arbitrary, but in well-designed turbines t is made as small as possible.

As a first approximation mt may be taken as zero and (3) becomes

$$\pi d b u_1 = Q \quad \text{.....(4).}$$

For an inward flow turbine the diameter d is fixed from consideration of the velocity with which the water leaves the wheel in an axial direction.

If the water leaves at both sides of the wheel as in Fig. 208, and the diameter of the shaft is d_0, the axial velocity is

$$u_0 = \frac{Q}{2\frac{\pi}{4}(d^2 - d_0^2)} \text{ ft. per sec.}$$

The diameter d_0 can generally be given an arbitrary value, or for a first approximation to d it may be neglected, and u_0 may be taken as equal to u_1. Then

$$d = \sqrt{\frac{2Q}{\pi u_1}} \text{ ft. } \text{.....(5).}$$

From (4) and (5) b and d can now be determined.

A ratio for $\frac{D}{d}$ having been decided upon, D can be calculated, and if the radial velocity at inlet is to be the same as at outlet, and t_0 is the thickness of the vanes at inlet,

$$(\pi D - mt_0)\, B = \frac{Q}{u_1} = (\pi d - mt)\, b \quad \text{.....(6).}$$

For rolled brass or wrought steel blades, t_0 may be very small, and for blades cast with the wheel, by shaping them as in Fig. 227, t_0 is practically zero. Then

$$B = \frac{Q}{\pi u D}.$$

If now the number of revolutions is fixed by any special condition, such as having to drive an alternator direct, at some definite speed, the peripheral velocity is

$$v = \frac{\pi D n}{60} \text{ ft. per sec.} \quad \text{.....(7).}$$

Then
$$\frac{Vv}{g} = eH,$$

and if e is given a value, say 80 per cent.,

$$V = \frac{\cdot 8gH}{v} \text{ ft. per sec.} \quad \text{.....(8).}$$

Since u, V, and v are known, the triangle of velocities at inlet can be drawn and the direction of flow and of the tip of vanes at inlet determined. Or θ and ϕ, Fig. 214, can be calculated from

$$\tan\theta = \frac{u}{V} \quad \text{.....(9)}$$

and
$$\tan\phi = \frac{u}{V - v} \quad \text{.....(10).}$$

Then U, the velocity of flow at inlet, is

$$U = V \sec\theta.$$

At exit
$$v_1 = \frac{\pi d n}{60} \text{ ft. per sec.,}$$

and taking u_1 as radial and equal to u, the triangle of velocities can be drawn, or α calculated from

$$\tan\alpha = \frac{u}{v_1}.$$

If H_0 is the head of water at the centre of the wheel and H_f the head lost by friction in the supply pipe and guide passages, the pressure head at the inlet is

$$\frac{p}{w} = H_0 - \frac{U^2}{2g} - H_f.$$

Example. An inward flow turbine is required to develop 300 horse-power under a head 60 feet, and to run at 250 revolutions per minute.

To determine the leading dimensions of the turbine.

Assuming e_1 to be 75 per cent.,

$$Q = \frac{300 \times 33{,}000}{75 \times 60 \times 62\cdot4 \times 60}$$
$$= 58\cdot7 \text{ cubic feet per sec.}$$

Assuming E is 95 per cent., or five per cent. of the head is lost by velocity of exit and $u_1 = u$,

$$\frac{u^2}{2g} = \cdot 05 \,.\, 60$$

and $$u = 13\ 8 \text{ feet per sec.}$$

Then from (5), page 340,

$$d = \sqrt{2}\sqrt{\frac{50}{\pi \,.\, 13\ 8}} = \sqrt{2 \,.\, 1\ 36}$$
$$= 1{\cdot}65 \text{ feet,}$$

say 20 inches to make allowance for shaft and to keep even dimension.

Then from (4), $$b = \frac{1{\cdot}36}{1\ 66} = {\cdot}82 \text{ foot}$$
$$= 9\tfrac{7}{8} \text{ inches say.}$$

Taking $\frac{D}{d}$ as 1·8, D = 3 0 feet, and

$$v = \pi \,.\, 3 \,.\, \tfrac{250}{60} = 39{\cdot}3 \text{ feet per sec.,}$$

and $$B = 5\tfrac{1}{2} \text{ inches say.}$$

Assuming e to be 80 per cent.,

$$V = \frac{{\cdot}80 \times 60 \times 32}{39{\cdot}3} = 39{\cdot}0 \text{ ft. per sec.}$$

$$\tan\theta = \frac{13\ 8}{39},$$

and $$\theta = 19^\circ 30'.$$

$$\tan\phi = \frac{13{\cdot}8}{-0\ 3},$$

and $$\phi = 91^\circ 15'.$$

$$\tan\alpha = \frac{13\ 8 \times 1{\cdot}8}{39{\cdot}3},$$

and $$\alpha = 32^\circ 18'$$

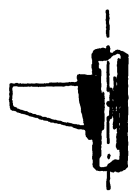

Fig. 220. Propeller type of wheel of Modern Parallel Flow Turbine or Centrifugal Pump. High Specific Speed.

The velocity U at inlet is $U = \sqrt{39\ 0^2 + (13\ 8)^2} = 41\ 3$ ft. per sec.

The absolute pressure head at the inlet to the wheel is

$$\frac{p}{w} = H_0 + \frac{p_a}{w} - \frac{41{\cdot}3^2}{2g} - h_f, \text{ the head lost by friction in the down pipe}$$
$$= H_0 + 34 - 26\ 5 - h_f.$$

The pressure head at the outlet of the wheel will depend upon the height of the wheel above or below the tail water.

197. Parallel or axial flow turbines.

Fig. 221 shows a double compartment axial flow turbine, the guide blades being placed above the wheel and the flow through the wheel being parallel to the axis. The circumferential section of the vanes at any radius when turned into the plane of the paper is as shown in Fig. 222. A plan of the wheel is also shown. One vane of a propeller for a modern type of parallel flow turbine is shown in Fig. 220.

The triangles of velocities for the parallel flow turbine at inlet and outlet for any radius are similar to those for inward and outward flow turbines, the velocities v and v_1, Fig. 223, being equal.

The general formula now becomes

$$v\frac{(V-V_1)}{g}=H-\frac{U_1^2}{2g}.$$

For maximum efficiency for a given flow, the water should leave the wheel in a direction parallel to the axis, so that it has no momentum in the direction of v.

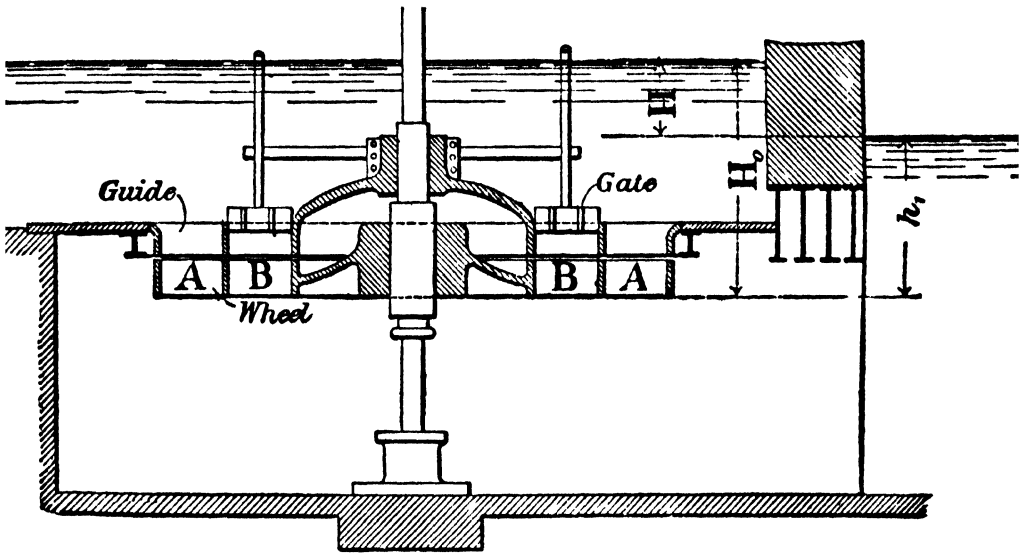

Fig. 221. Double Compartment Parallel Flow Turbine.

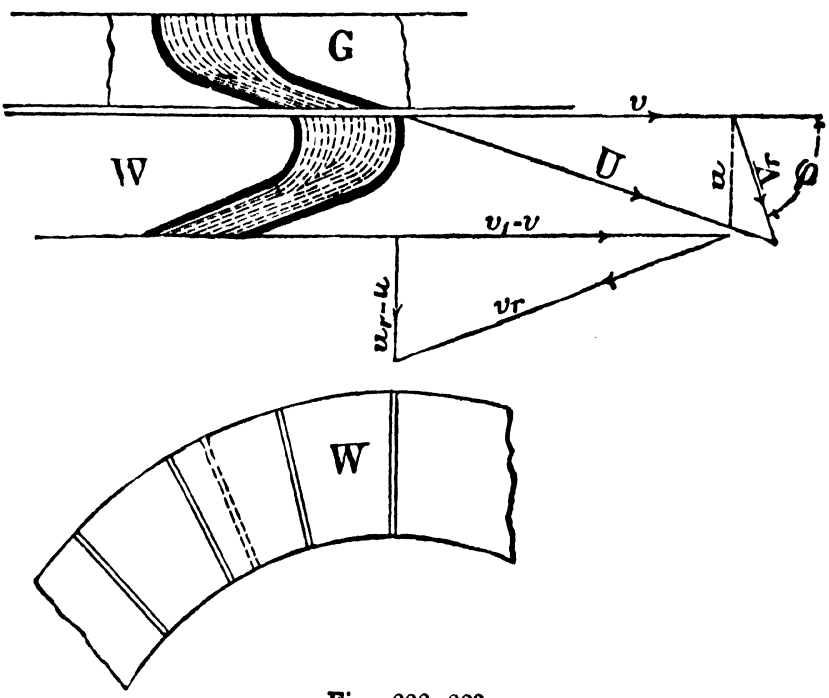

Figs. 222, 223.

Then, taking friction and other losses into account,

$$\frac{Vv}{g}=eH.$$

The velocity v will be proportional to the radius, so that if the water is to enter and leave the wheel without shock, the angles θ, ϕ, and α must vary with the radius.

The variation in the form of the vane with the radius is shown by an example.

A Jonval wheel has an internal diameter of 5 feet and an external diameter of 8′ 6″. The depth of the wheel is 7 inches. The head is 15 feet and the wheel makes 55 revolutions per minute. The flow is 300 cubic feet per second.

To find the horse-power of the wheel, and to design the wheel vanes.

Let r_1 be any radius, and r and r_2 the radii of the wheel at the inner and outer circumference respectively. Then

$$r = 2{\cdot}5 \text{ feet} \quad \text{and } v = 2\pi r \tfrac{55}{60} = 14{\cdot}4 \text{ feet per sec.,}$$

$$r_1 = 3{\cdot}75 \text{ feet} \quad \text{and } v_1 = 2\pi r_1 \tfrac{55}{60} = 21{\cdot}5 \text{ feet per sec.,}$$

$$r_2 = 4{\cdot}25 \text{ feet} \quad \text{and } v_2 = 2\pi r_2 \tfrac{55}{60} = 24{\cdot}5 \text{ feet per sec.}$$

The mean axial velocity is

$$u = \frac{300}{\pi\,(r_2^2 - r^2)} = 8{\cdot}15 \text{ ft. per sec.}$$

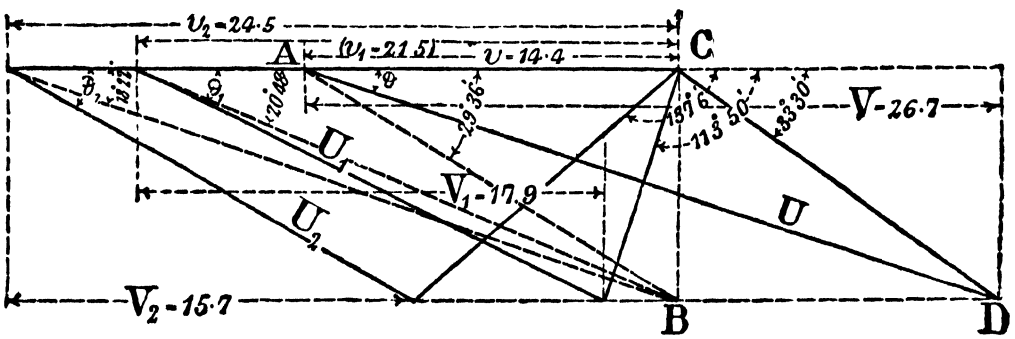

Fig. 224. Triangles of velocities at inlet and outlet at three different radii of a Parallel Flow Turbine.

Taking e as 0·80 at each radius,

$$V = \frac{0{\cdot}8\,.\,32{\cdot}2\,.\,15}{14{\cdot}4} = \frac{385}{14{\cdot}4} = 26{\cdot}7 \text{ ft. per sec.,}$$

$$V_1 = \frac{385}{21{\cdot}5} = 17{\cdot}9 \text{ ft. per sec.,}$$

$$V_2 = \frac{385}{24{\cdot}5} = 15{\cdot}7 \text{ ft. per sec.}$$

Inclination of the vanes at inlet. The triangles of velocities for the three radii r, r_1, r_2 are shown in Fig. 224. For example, at radius r, ADC is the triangle of velocities at inlet and ABC the

triangle of velocities at outlet. The inclinations of the vanes at inlet are found from

$$\tan\phi = \frac{8{\cdot}15}{26{\cdot}7 - 14{\cdot}4}, \text{ from which } \phi = 33^\circ\,30',$$

$$\tan\phi_1 = \frac{8{\cdot}15}{17{\cdot}9 - 21{\cdot}5} \text{ and } \phi_1 = 113^\circ\,50,$$

$$\tan\phi_2 = \frac{8{\cdot}15}{15{\cdot}7 - 24{\cdot}5}, \text{ from which } \phi_2 = 137^\circ\,6'.$$

The inclination of the guide blade at each of the three radii.

$$\tan\theta = \frac{8{\cdot}15}{26{\cdot}7},$$

from which $\theta = 17^\circ,$

$$\tan\theta_1 = \frac{8{\cdot}15}{17{\cdot}9} \text{ and } \theta_1 = 24^\circ\,30',$$

$$\tan\theta_2 = \frac{8{\cdot}15}{15{\cdot}7} \text{ and } \theta_2 = 27^\circ\,30'.$$

The inclination of the vanes at exit.

$$\tan\alpha = \frac{8{\cdot}15}{14{\cdot}4} = 29^\circ\,36',$$

$$\tan\alpha_1 = \frac{8{\cdot}15}{21{\cdot}5} = 20^\circ\,48',$$

$$\tan\alpha_2 = \frac{8{\cdot}15}{24{\cdot}5} = 18^\circ\,22'.$$

If now the lower tips of the guide blades and the upper tips of the wheel vanes are made radial as in the plan, Fig. 221, the inclination of the guide blade will have to vary from 17 to 27½ degrees or else there will be loss by shock. To get over this difficulty the upper edge only of each guide blade may be made radial, the lower edge of the guide blade and the upper edge of each vane, instead of being radial, being made parallel to the upper edge of the guide. In Fig. 225 let r and R be the radii of the inner and outer crowns of the wheel and also of the guide blades. Let MN be the plan of the upper edge of a guide blade and let DG be the plan of the lower edge, DG being parallel to MN. Then as the water runs along the guide at D, it will leave the guide in a direction perpendicular to OD. At G it will leave in a direction HG perpendicular to OG. Now suppose the guide at the edge DG to have an inclination β to the plane of the paper. If then a section of the guide is taken by a vertical plane XX perpendicular to DG, the elevation of the tip of the vane on this plane will be AL, inclined at β to the horizontal line AB, and AC

will be the intersection of the plane XX with the plane tangent to the tip of the vane.

Now suppose DE and GH to be the projections on the plane of the paper of two lines lying on the tangent plane AC and perpendicular to OD and OG respectively. Draw EF and HK perpendicular to DE and GH respectively, and make each of them equal to BC. Then the angle EDF is the inclination of the stream line at D to the plane of the paper, and the angle HGK is the inclination of the stream line at G to the plane of the paper. These should be equal to θ and θ_2.

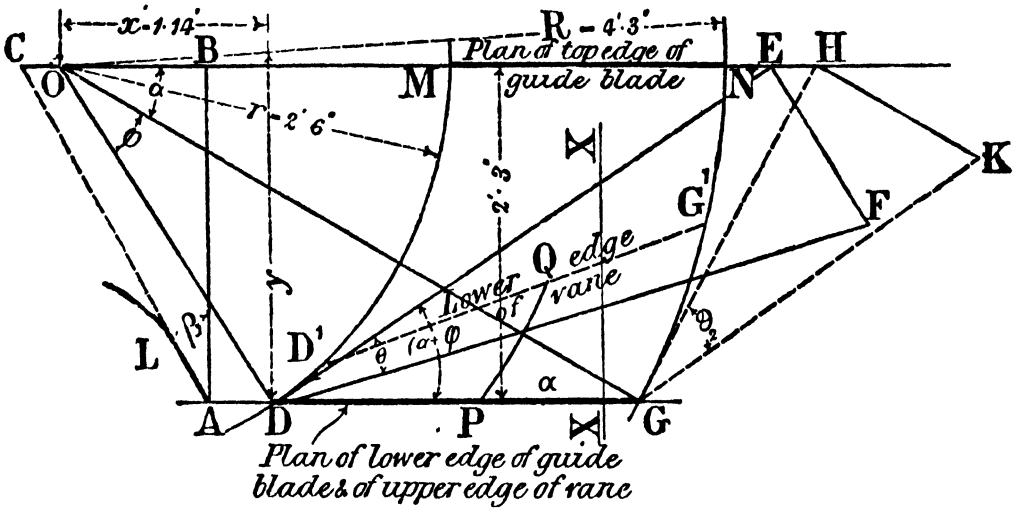

Fig. 225. Plan of guide blades and vanes of Parallel Flow Turbines.

Let y be the perpendicular distance between MN and DG. Let the angles GOD and GOH be denoted by ϕ an α respectively.

Since EF, BC and HK are equal,

$$\text{ED} \tan \theta = y \tan \beta \quad \text{.....(1)},$$

and

$$\text{GH} \tan \theta_2 = y \tan \beta \quad \text{.....(2)}.$$

But

$$\frac{y}{\text{ED}} = \cos (\alpha + \phi),$$

and

$$\frac{y}{\text{GH}} = \cos \alpha.$$

Therefore

$$\tan \theta = \cos (\alpha + \phi) \tan \beta \quad \text{.....(3)},$$

and

$$\tan \theta_2 = \cos \alpha \tan \beta \quad \text{.....(4)}.$$

Again,

$$\sin \alpha = \frac{y}{\text{R}} \quad \text{.....(5)}.$$

There are thus three equations from which α, ϕ and β can be determined.

Let x and y be the coordinates of the point D, O being the intersection of the axes.

Then $$\cos(\alpha + \phi) = \frac{x}{r},$$

and from (5) $$\cos\alpha = \sqrt{1 - \frac{y^2}{R^2}}.$$

Substituting for $\cos(\alpha + \phi)$ and $\cos\alpha$ and the known values of $\tan\theta$ and $\tan\theta_2$ in the three equations (3—5), three equations are obtained with x, y, and β as the unknowns.

Solving simultaneously

$$x = 1{\cdot}14 \text{ feet},$$

$$y = 2{\cdot}23 \text{ feet},$$

and $$\tan\beta = 0{\cdot}67,$$

from which $$\beta = 34^\circ.$$

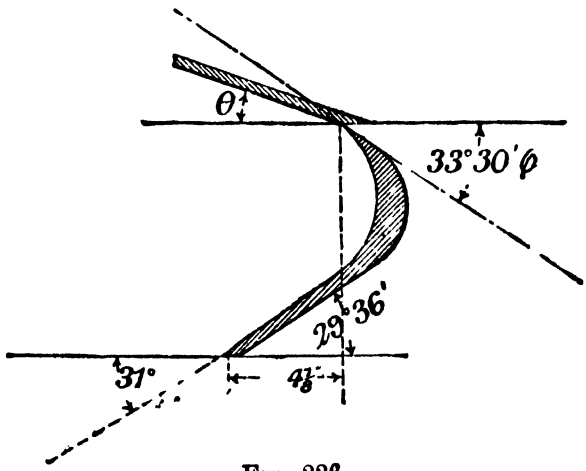

Fig. 226.

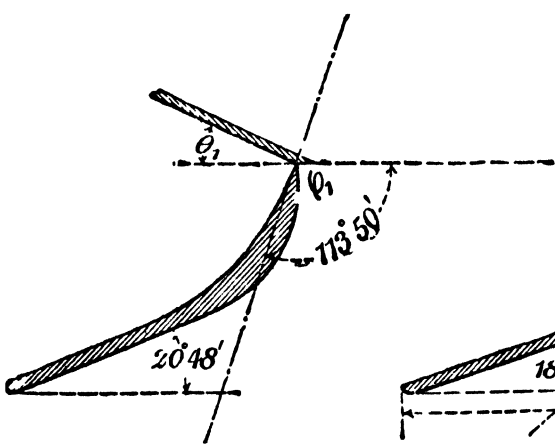

Fig 227.

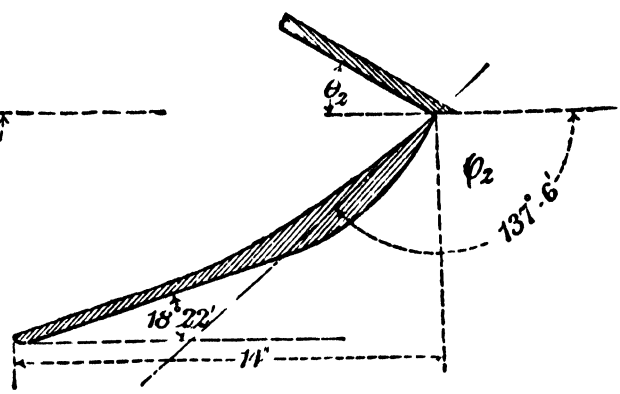

Fig. 228.

The length of the guide blade is thus found, and the constant slope at the edge DG so that the stream lines at D and G shall have the correct inclination.

If now the upper edge of the vane is just below DG, and the tips of the vane at D and G are made as in Figs. 226—228, ϕ and

ϕ_2 being 33° 30′ and 137° 6′ respectively, the water will move on to the vane without shock.

The plane of the lower edge of the vane may now be taken as D′G′, Fig. 225, and the circular sections DD′, PQ, and GG′ at the three radii, r, r_1, and r_2 are then as in Figs. 226—228.

198. Regulation of the flow to parallel flow turbines.

To regulate the flow through a parallel flow turbine, Fontaine placed sluices in the guide passages, as in Fig. 229, connected to a ring which could be raised or lowered by three vertical rods having nuts at the upper ends fixed to toothed pinions. When

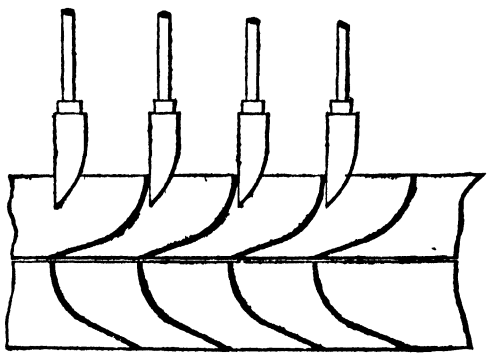

Fig. 229. Fontaine's Sluices.

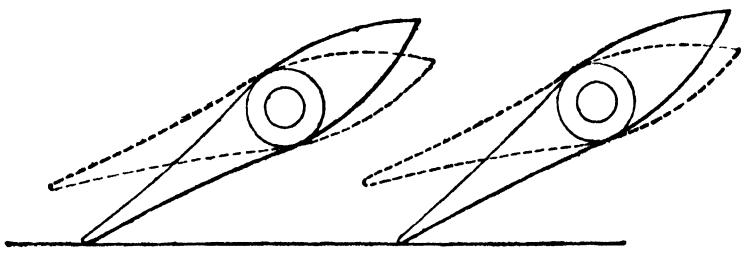

Fig. 230. Adjustable guide blades for Parallel Flow Turbine.

the sluices required adjustment, the nuts were revolved together by a central toothed wheel gearing with the toothed pinions carrying the nuts. Fontaine fixed the turbine wheel to a hollow shaft which was carried on a footstep above the turbine. In some modern parallel flow turbines the guide blades are pivoted, as in Fig. 230, so that the flow can be regulated. The wheel may be made with the crowns opening outwards, in section, similar to the Girard turbine shown in Fig. 254, so that the axial velocity with which the water leaves the wheel may be small.

The axial flow turbine is well adapted to low falls with variable head, and may be made in several compartments as in Fig. 220. In this example, only the inner ring is provided with gates. In dry weather flow the head is about 3 feet and the gates of the inner ring can be almost closed as the outer ring will give the full

power. During times of flood, and when there is plenty of water, the head falls to 2 feet, and the sluices of the inner ring are opened. A larger supply of water at less head can thus be allowed to pass through the wheel, and although, due to the shock in the guide passages of the inner ring, the wheel is not so efficient, the abundance of water renders this unimportant.

Example. A double compartment Jonval turbine has an outer diameter of 12′ 6″ and an inner diameter of 6 feet.

The radial width of the inner compartment is 1′ 9″ and of the outer compartment 1′ 6″. Allowing a velocity of flow of 3·25 ft per second and supposing the minimum fall is 1′ 8″, and the number of revolutions per minute 14, find the horse-power of the wheel when all the guide passages are open, and find what portion of the inner compartment must be shut off so that the horse-power shall be the same under a head of 3 feet. Efficiency 70 per cent.

Neglecting the thickness of the blades,

the area of the outer compartment $=\frac{\pi}{4}(12{\cdot}5^2-9\ 5^2)=52{\cdot}6$ sq. feet.

" " inner " $=\frac{\pi}{4}(9{\cdot}5^2-6^2)=42{\cdot}8$ sq. feet.

Total area $=95{\cdot}4$ sq. feet.

The weight of water passing through the wheel is

$$W=95\ 4\times 62\ 4\times 3\ 25 \text{ lbs. per sec.}$$
$$=19{,}300 \text{ lbs. per sec.}$$

and the horse-power is

$$HP=\frac{19{,}300\times 1{\cdot}66\times 0{\cdot}7}{550}=40{\cdot}8.$$

Assuming the velocity of flow constant the area required when the head is 3 feet is

$$A=\frac{40\ 8\times 33{,}000}{60\times 62{\cdot}5\times 3\times{\cdot}7}$$
$$=55\ 6 \text{ sq. feet,}$$

or the outer wheel will nearly develop the horse-power required.

199. Bernoulli's equations for axial flow turbines.

The Bernoulli's equations for an axial flow turbine can be written down in exactly the same way as for the inward and outward flow turbines, page 335, except that for the axial flow turbine there is no centrifugal head impressed on the water between inlet and outlet.

Then, $$\frac{p}{w}+\frac{V_r^2}{2g}=\frac{p_1}{w}+\frac{v_r^2}{2g}+h_f,$$

from which, since v is equal to v_1,

$$\frac{p}{w}+\frac{V^2-2Vv+v^2}{2g}+\frac{u^2}{2g}=\frac{p_1}{w}+\frac{v^2-2V_1v+V_1^2}{2g}+\frac{u_1^2}{2g}+h_f,$$

therefore $$\frac{p}{w}+\frac{V^2}{2g}-\frac{Vv}{g}+\frac{u^2}{2g}=\frac{p_1}{w}+\frac{V_1^2}{2g}+\frac{u_1^2}{2g}-\frac{V_1v}{g}+h_f,$$

and $$\frac{Vv}{g}-\frac{V_1v}{g}=\frac{p}{w}+\frac{U^2}{2g}-\frac{U_1^2}{2g}-\frac{p_1}{w}-h_f.$$

But in Fig. 220, $\frac{p}{w} + \frac{U^2}{2g} = H_0 + \frac{p_a}{w} - H_f,$

and $\frac{p_1}{w} = \frac{p_a}{w} + h_1.$

Therefore, $\frac{Vv}{g} - \frac{V_1 v}{g} = H - \frac{U_1^2}{2g} - H_f - h_f.$

If U_1 is axial and equal to u, as in Fig. 223,

$$\frac{Vv}{g} = H - \frac{u^2}{2g} - H_f - h_f$$
$$= eH.$$

200. Mixed flow turbines.

By a modification of the shape of the vanes of an inward flow turbine, the mixed flow turbine is obtained. In the inward and outward flow turbine the water only acts upon the wheel while it is moving in a radial direction, but in the mixed flow turbine the vanes are so formed that the water acts upon them also, while flowing axially.

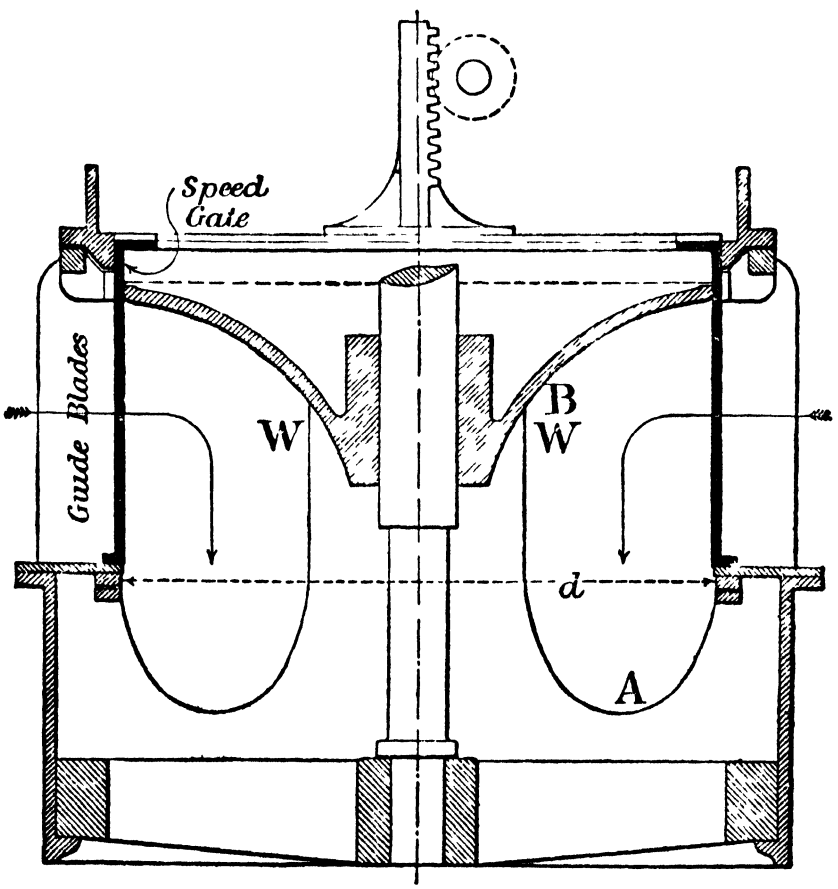

Fig. 231. Mixed Flow Turbine.

Fig. 231 shows a diagrammatic section through the wheel of a mixed flow turbine, the axis of which is vertical. The water

enters the wheel in a horizontal direction and leaves it vertically, but it leaves the discharging edge of the vanes in different directions. At the upper part B it leaves the vanes nearly radially, and at the lower part A, axially. The vanes are spoon-shaped, as shown in Fig. 232, and should be so formed, or in other words, the inclination of the discharging edge should so vary, that wherever the water leaves the vanes it should do so with no component in a direction perpendicular to the axis of the turbine, *i.e.* with no velocity of whirl. The regulation of the supply to the wheel in the turbine of Fig. 231 is effected by a cylindrical sluice or speed gate between the fixed guide blades and the wheel.

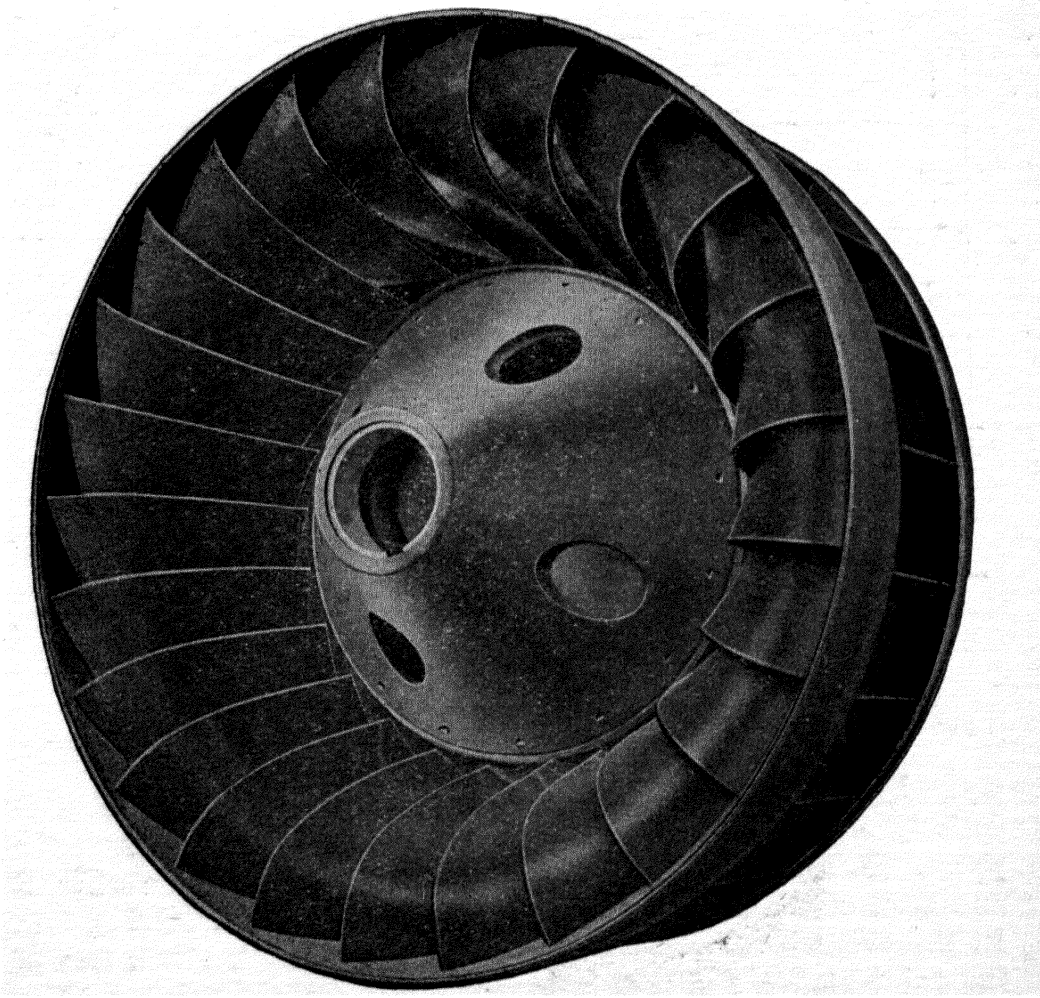

Fig. 232. Wheel of Mixed Flow Turbine.

Fig. 233 shows a section through the wheel and casing of a double mixed flow turbine having adjustable guide blades to regulate the flow. Fig. 234 shows a half longitudinal section of the turbine, and Fig. 235 an outside elevation of the guide blade regulating gear. The guide blades are surrounded by a large

vortex chamber, and the outer tips of the guide blades are of variable shapes, Fig. 233, so as to diminish shock at the entrance to the guide passages. Each guide blade is really made in two parts, one of which is made to revolve about the centre C, while the outer tip is fixed. The moveable parts are made so that the flow can be varied from zero to its maximum value. It will be

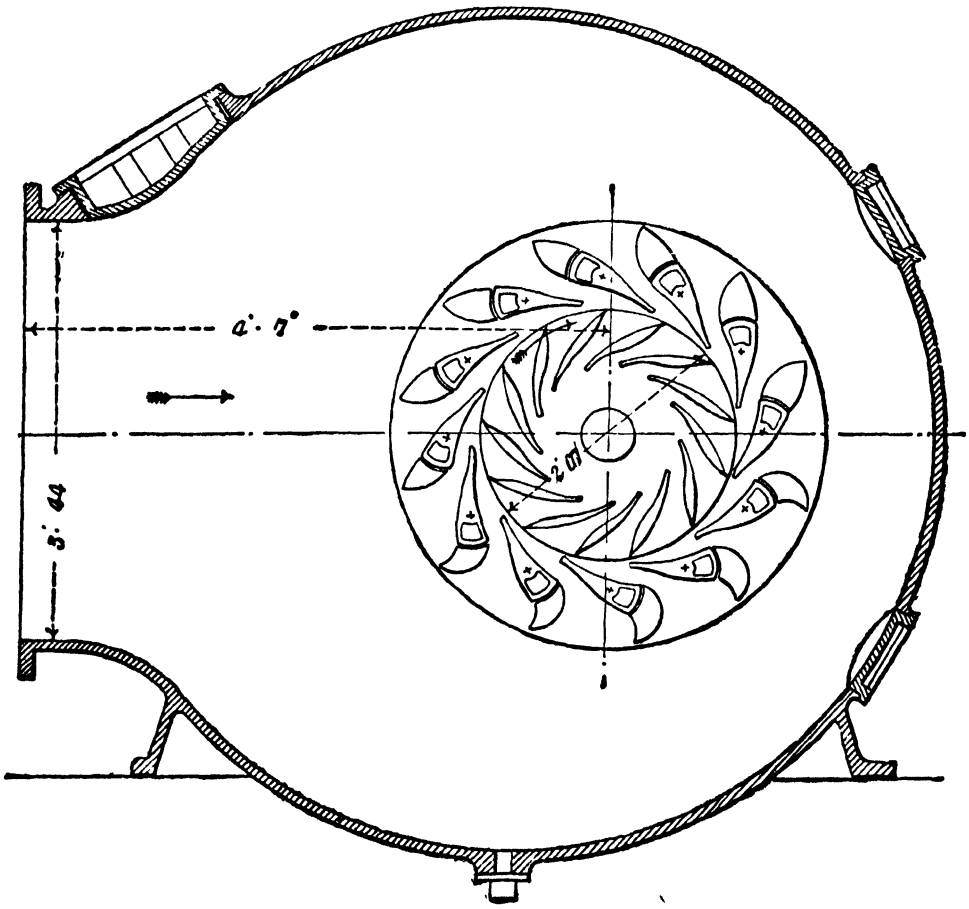

Fig. 233. Section through wheel and guide blades of Mixed Flow Turbine.

noticed that the mechanism for moving the guide blades is entirely external to the turbine, and is consequently out of the water. A further special feature is that between the ring R and each of the guide blade cranks is interposed a spiral spring. In the event of a solid body becoming wedged between two of the guide blades, and thus locking one of them, the adjustment of the other guide blades is not interfered with, as the spring connected to the locked blade by its elongation will allow the ring to rotate. As with the inward and outward flow turbine, the mixed flow turbine wheel may either work drowned, or exhaust into a "suction tube." Figs. 233A and 233B show a wheel of somewhat special form in order to obtain a high speed for a given head and a large quantity of flow.

For a given flow, and width of wheel, the axial velocity with which the water finally flows away from the wheel being the same for the two cases, the diameter of a mixed flow turbine can be made less than an inward flow turbine. As shown on page 340, the diameter of the inward flow turbine is in large measure fixed

Fig 233A.
Modern Mixed Flow Turbine.

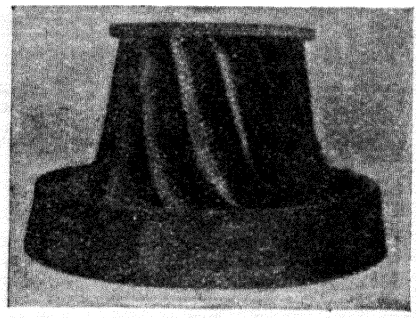

Fig 233B
High Specific Speed.

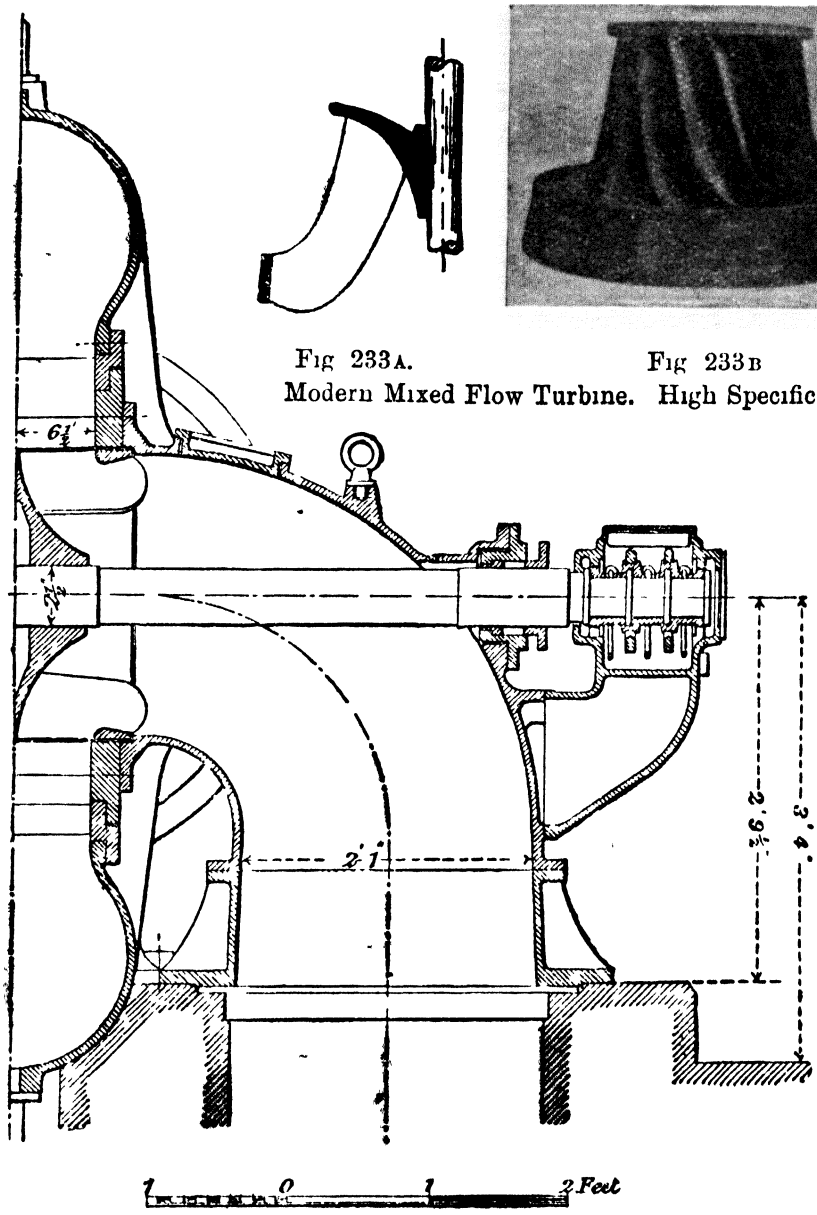

Fig. 234. Half-longitudinal section of Mixed Flow Turbine.

by the diameter of the exhaust openings of the wheel. For the same axial velocity, and the same total flow, whether the turbine is an inward or mixed flow turbine, the diameter d of the exhaust openings must be about equal. The external diameter, therefore, of the latter will be much smaller than for the former, and the

general dimensions of the turbine will be also diminished. For a given head H, the velocity v of the inlet edge being the same in the two cases, the mixed flow turbine can be run at a higher angular velocity, which is sometimes an advantage in driving dynamos.

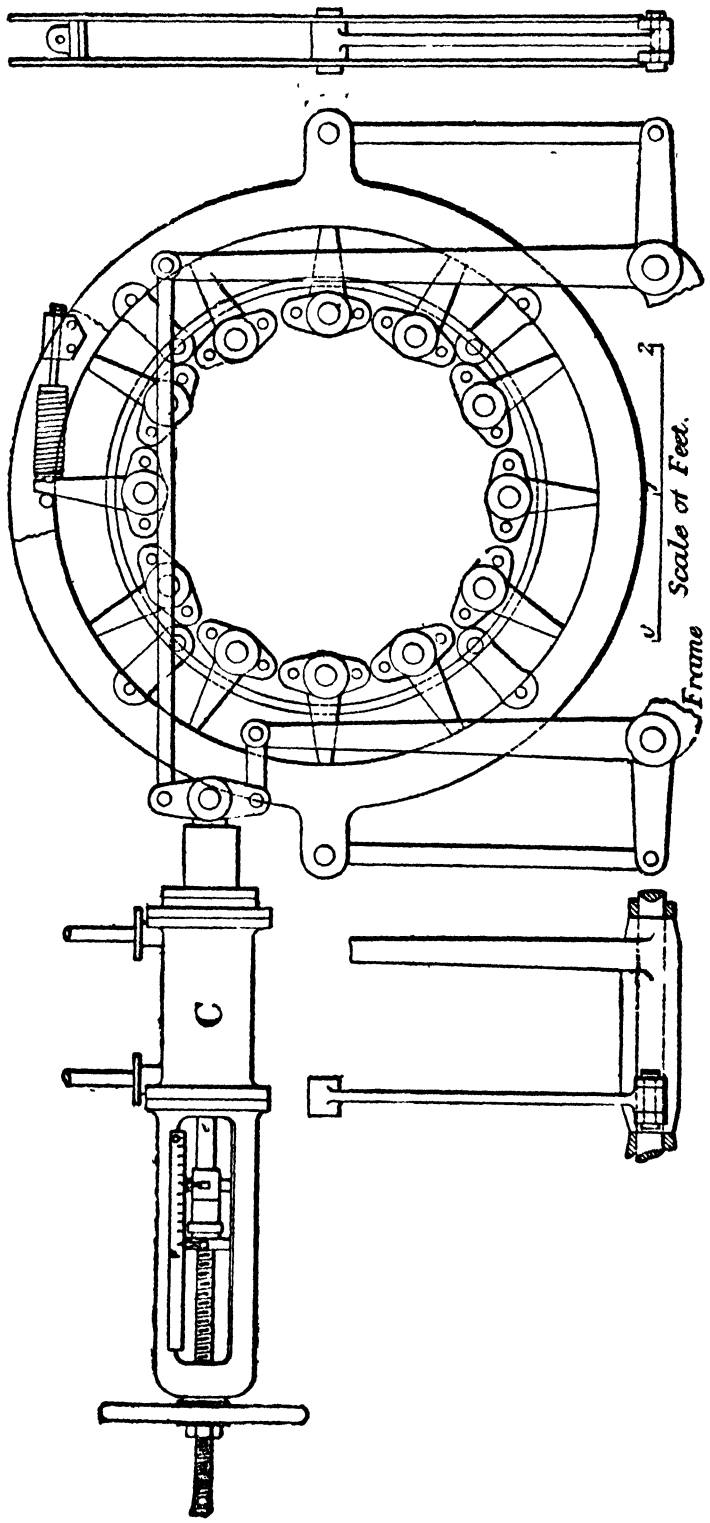

Fig. 235. Elevation of guide blade regulating gear for Mixed Flow Turbine.

Form of the vanes. At the receiving edge, the direction of the blade is found in the same way as for an inward flow turbine.

ABC, Fig. 236, is the triangle of velocities, and BC is parallel to the tip of the blade. This triangle has been drawn for the data of the turbine shown in Figs. 233—235; v is 46·5 feet per second, and from

$$\frac{Vv}{g} = 0{\cdot}8H,$$

$$V = 33{\cdot}5 \text{ feet per second.}$$

The angle ϕ is 139 degrees.

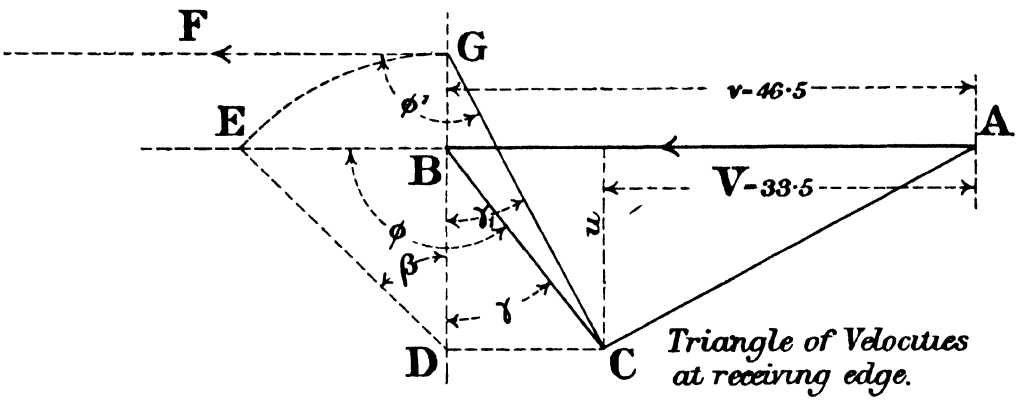

Fig. 236.

The best form for the vane at the discharge is somewhat difficult to determine, as the exact direction of flow at any point on the discharging edge of the vane is not easily found. The condition to be satisfied is that the water must leave the wheel without any component in the direction of motion.

The following construction gives approximately the form of the vane.

Make a section through the wheel as in Fig. 237. The outline of the discharge edge FGH is shown. This edge of the vane is supposed to be on a radial plane, and the plan of it is, therefore, a radius of the wheel, and upon this radius the section is taken.

It is now necessary to draw the form of the stream lines, as they would be approximately, if the water entered the wheel radially and flowed out axially, the vanes being removed.

Divide 04, Fig. 237, at the inlet, into any number of equal parts, say four, and subdivide by the points *a*, *b*, *d*, *e*.

Take any point A, not far from *c*, as centre, and describe a circle MM_1 touching the crowns of the wheel at M and M_1. Join AM and AM_1.

Draw a flat curve M_1M_1 touching the lines AM and AM_1 in M and M_1 respectively, and as near as can be estimated, perpendicular

to the probable stream lines through a, b, d, e, which can be sketched in approximately for a short distance from 04.

Taking this curve MM_1 as approximately perpendicular to the stream lines, two points f and g near the centres of AM and AM_1 are taken.

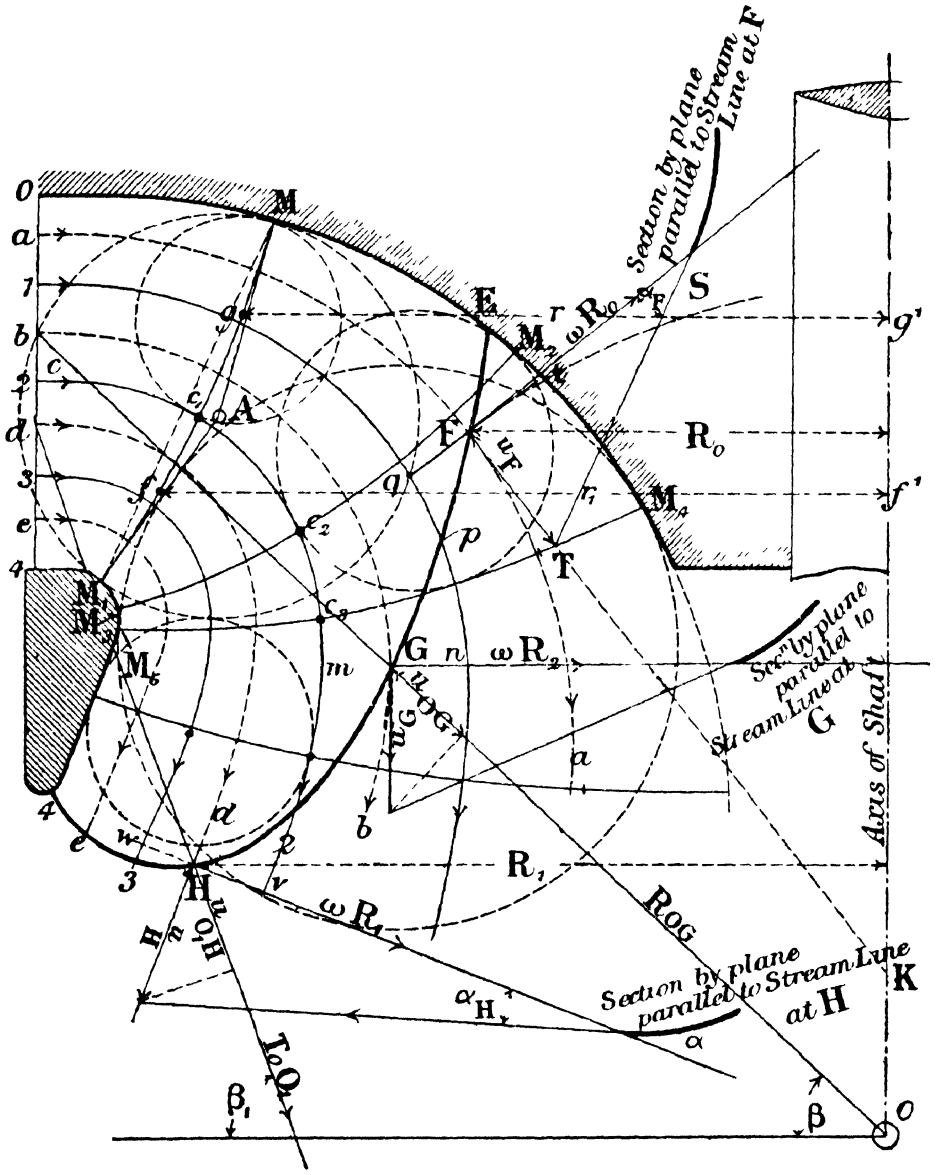

Fig. 237.

Let the radius of the points g and f be r and r_1 respectively. If any point c_1 on MM_1 is now taken not far from A, the peripheral area of Mc_1 is nearly $2\pi r Mc_1$, and the peripheral area of M_1c_1 is nearly $2\pi r_1 M_1c_1$.

On the assumption that the mean velocity through M_1M is constant, the flow through Mc_1 will be equal to that through M_1c_1, when,

$$Mc_1 . r = M_1c_1 . r_1.$$

If, therefore, MM_1 is divided at the point c_1 so that

$$\frac{M_1c_1}{Mc_1} = \frac{r}{r_1},$$

the point c_1 will approximately be on the stream line through c.

If now when the stream line cc_1 is carefully drawn in, it is perpendicular to MM_1, the point c_1 cannot be much in error.

A nearer approximation to c_1 can be found by taking new values for r and r_1, obtained by moving the points f and g so that they more nearly coincide with the centres of c_1M and c_1M_1. If the two curves are not perpendicular, the curve MM_1 and the point c_1 are not quite correct, and new values of r and r_1 will have to be obtained by moving the points f and g. By approximation c_1 can be thus found with considerable accuracy.

By drawing other circles to touch the crown of the wheels, the curves M_2M_3, M_4M_5 etc. normal to the stream lines, and the points c_2, c_3, etc. on the centre stream line, can be obtained.

The curve 22, therefore, divides the stream lines into equal parts.

Proceeding in a similar manner, the curves 11 and 33 can be obtained, dividing the stream lines into four equal parts, and these again subdivided by the curves *aa*, *bb*, *dd*, and *ee*, which intersect the outlet edge of the vane at the points F, G, H and *e* respectively.

To determine the direction of the tip of the vane at points on the discharging edge. At the points F, G, H, the directions of the stream lines are known, and the velocities u_F, u_G, u_H can be found, since the flows through 01, 12, etc. are equal, and therefore

$$u_F R_0 qt = u_G R_2 mn = u_H R_1 wv = \frac{Q}{8\pi}.$$

Draw a tangent FK to the stream line at F. This is the intersection, with the plane of the paper, of a plane perpendicular to the paper and tangent to the stream line at F.

The point F in the plane of FK is moving perpendicular to the plane of the paper with a velocity equal to $\omega . R_0$, ω being the angular velocity of the wheel, and R_0 the radius of the point F.

If a circle be struck on this plane with K as centre, this circle may be taken as an imaginary discharge circumference of an inward flow turbine, the velocity v of which is ωR_0, and the tip of the blade is to have such an inclination, that the water shall discharge radially, *i.e.* along FK, with a velocity u_F. Turning this circle into the plane of the paper and drawing the triangle of velocities FST, the inclination α_F of the tip of the blade at F in the plane FK is obtained.

At G the stream line is nearly vertical, but ωR_2 can be set out in the plane of the paper, as before, perpendicular to u_G and the inclination α_G, on this plane, is found.

At H, α_H is found in the same way, and the direction of the vane, in definite planes, at other points on its outlet edge, can be similarly found.

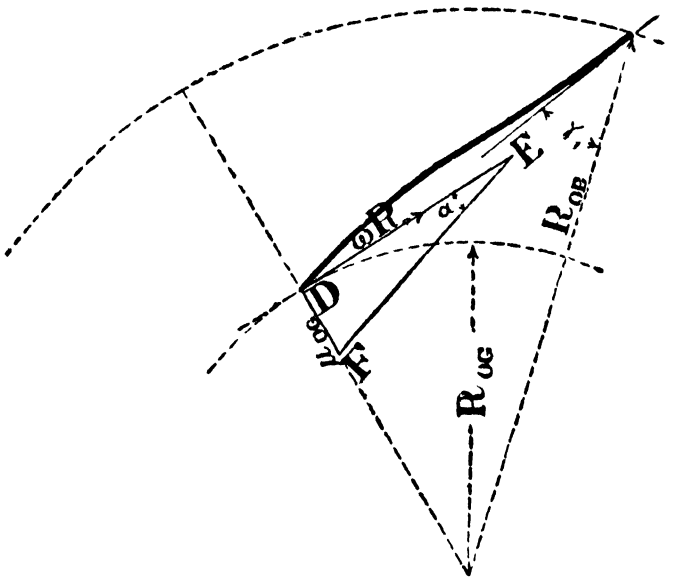

Fig. 238.

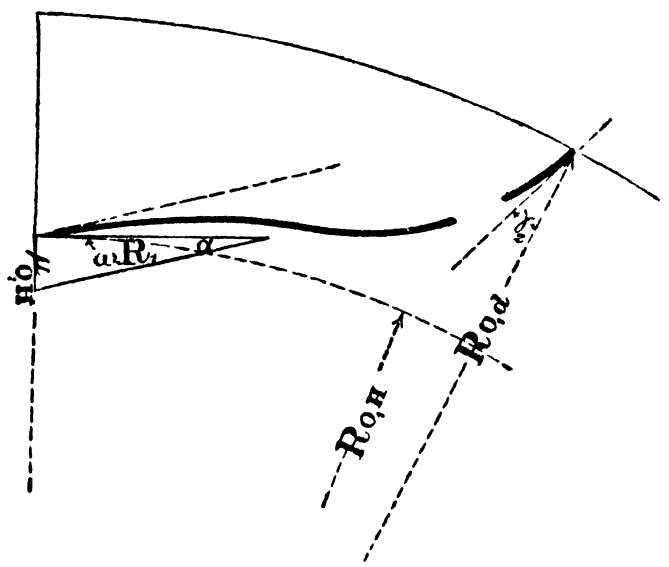

Fig. 239.

Sections of the vane by planes OGb, and O_1Hd. These are shown in Figs. 238 and 239, and are determined as follows.

Imagine a vertical plane tangent to the tip of the vane at inlet. The angle this plane makes with the tangent to the wheel at b is the angle ϕ, Fig. 236. Let BC of the same figure be the

plan of a horizontal line lying in this plane, and BD the plan of the radius of the wheel at b. The angle between these lines is γ.

Let β be the inclination of the plane OGb to the horizontal.

From D, Fig. 236, set out DE, inclined to BD at an angle β, and intersecting AB produced in E; with D as centre and DE as radius draw the arc EG intersecting DB produced in G. Join CG.

The angle CGD is the angle γ_1, which the line of intersection, of the plane OGb, Fig. 237, with the plane tangent to the inlet tip of the vane, makes with the radius Ob; and the angle CGF is the angle on the plane OGB which the tangent to the vane makes with the direction of motion of the inlet edge of the vane.

In Fig. 238 the inclination of the inlet tip of the blade is γ_1 as shown.

To determine the angle α at the outlet edge, resolve u_G, Fig. 237, along and perpendicular to OG, u_{0G} being the component along OG.

Draw the triangle of velocities DEF, Fig. 238.

The tangent to the vane at D is parallel to FE.

In the same way, the section on the plane Hd, Fig. 237, may be determined; the inclination at the inlet is γ_2, Fig. 239.

Mixed flow turbine working in open stream. A double turbine working in open stream and discharging through a suction tube is shown in Fig. 240. This is a convenient arrangement for moderately low falls. Turbines, of this class, of 1500 horse-power, having four wheels on the same shaft and working under a head of 25 feet, and making 150 revolutions per minute, have recently been installed by Messrs Escher Wyss at Wangen an der Aare in Switzerland.

201. Cone turbine.

Another type of inward flow turbine, which is partly axial and partly radial, is shown in Fig. 241, and is known as the cone turbine. It has been designed by Messrs Escher Wyss to meet the demand for a turbine that can be adapted to variable flows.

The example shown has been erected at Cusset near Lyons and makes 120 revolutions per minute.

The wheel is divided into three distinct compartments, the supply of water being regulated by three cylindrical sluices S, S_1 and S_2. The sluices S and S_1 are each moved by three vertical spindles such as A and A_1 which carry racks at their upper ends. These two sluices move in opposite directions and thus balance each other. The sluice S_2 is normally out of action, the upper

compartment being closed. At low heads this upper compartment is allowed to come into operation. The sluice S_2 carries a rack which engages with a pinion P, connected to the vertical shaft T.

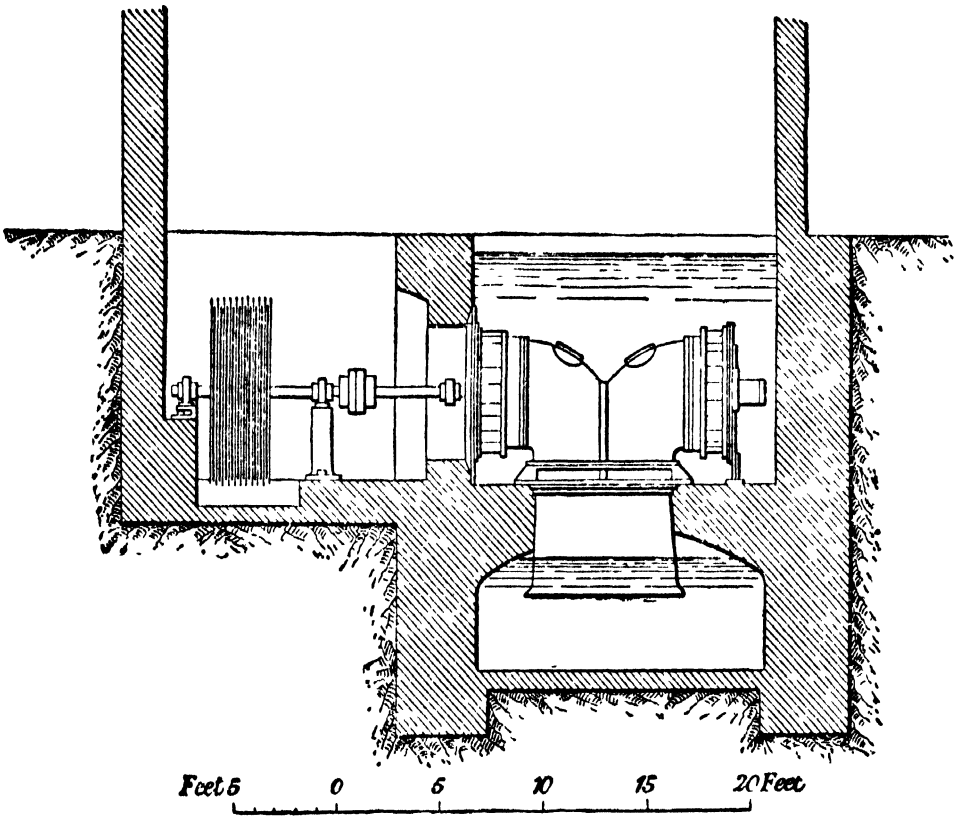

Fig 240.

The shaft T is turned by hand by means of a worm and wheel W. When it is desired to raise the sluice S_2, it is revolved by means of the pinion P until the arms F come between collars D and E on the spindles carrying the sluice S_1, and the sluice S_2 then rises and falls with S_1. The pinion, gearing with racks on A and A_1, is fixed to the shaft M, which is rotated by the rack R gearing with the bevel pinion Q. The rack R is rotated by two connecting rods, one of which C is shown, and which are under the control of the hydraulic governor as described on page 380.

The wheel shaft can be adjusted by nuts working on the square-threaded screw shown, and is carried on a special collar bearing supported by the bracket B. The weight of the shaft is partly balanced by the water-pressure piston which has acting underneath it a pressure per unit area equal to that in the supply chamber. The dimensions shown are in millimetres.

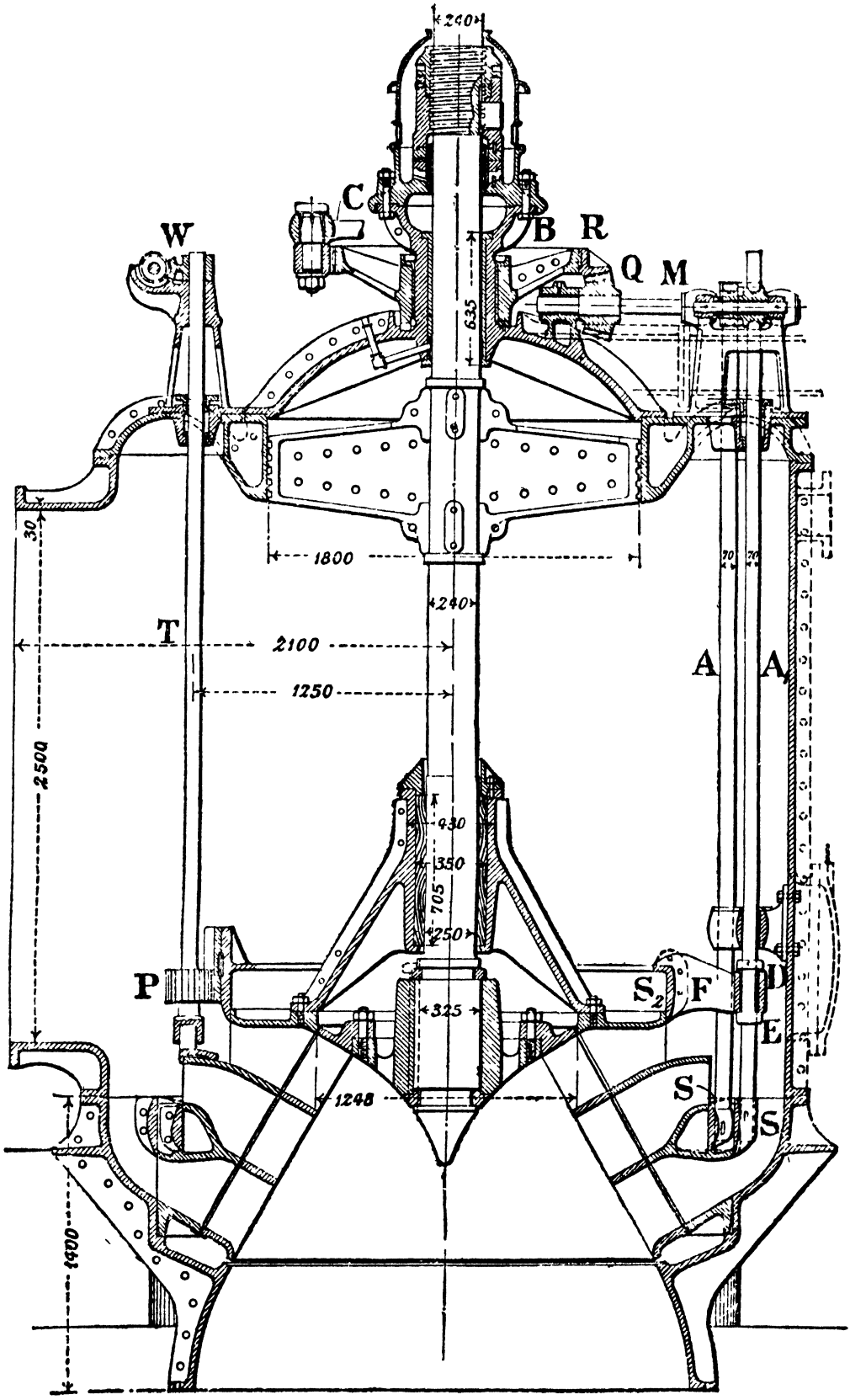

Fig. 241. Cone Turbine.

202. Effect of changing the direction of the guide blade, when altering the flow of inward flow and mixed flow turbines.

As long as the velocity of a wheel remains constant, the backward head impressed on the water by the wheel is the same, and the pressure head, at the inlet to the wheel, will remain practically constant as the guides are moved. The velocity of flow U, through the guides, will, therefore, remain constant; but as the angle θ, which the guide makes with the tangent to the wheel, diminishes the radial component u, of U, diminishes.

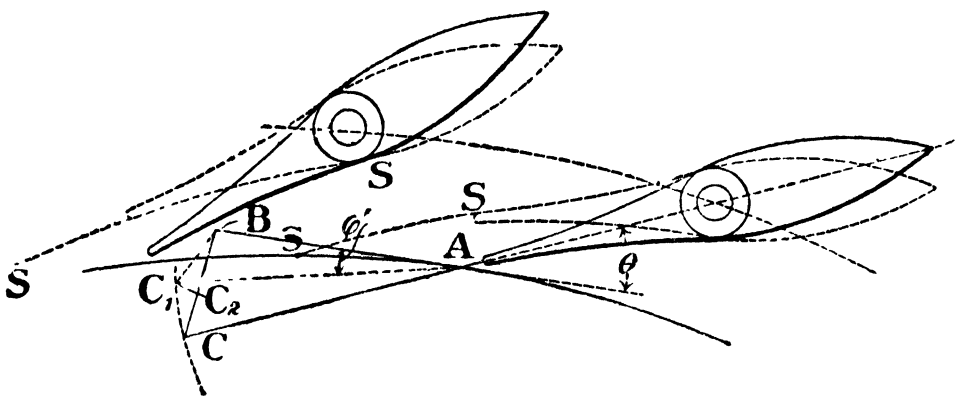

Fig. 242.

Let ABC, Fig. 242, be the triangle of velocities for full opening, and suppose the inclination of the tip of the blade is made parallel to BC. On turning the guides into the dotted position, the inclination being ϕ'_1, the triangle of velocities is ABC_1, and the relative velocity of the water and the periphery of the wheel is now BC_1 which is inclined to the vane, and there is, consequently, loss due to shock.

It will be seen that in the dotted position the tips of the guide blades are some distance from the periphery of the wheel and it is probable that the stream lines on leaving the guide blades follow the dotted curves SS, and if so, the inclination of these stream lines to the tangent to the wheel will be actually greater than ϕ'_1, and BC_1 will then be more nearly parallel to BC. The loss may be approximated to as follows:

As the water enters the wheel its radial component will remain unaltered, but its direction will be suddenly changed from BC_1 to BC, and its magnitude to BC_2; C_1C_2 is drawn parallel to AB. A velocity equal to C_1C_2 has therefore to be suddenly impressed on the water.

On page 68 it has been shown that on certain assumptions the

head lost when the velocity of a stream is suddenly changed from v_1 to v_2 is

$$\frac{(v_1 - v_2)^2}{2g},$$

that is, it is equal to the head due to the relative velocity of v_1 and v_2.

But C_1C_2 is the relative velocity of BC_1 and BC_2, and therefore the head lost at inlet may be taken as

$$\frac{k\,(C_1C_2)^2}{2g},$$

k being a coefficient which may be taken as approximately unity.

203. Effect of diminishing the flow through turbines on the velocity of exit.

If water leaves a wheel radially when the flow is a maximum, it will not do so for any other flow.

The angle of the tip of the blade at exit is unalterable, and if u and u_0 are the radial velocities of flow, at full and part load respectively, the triangles of velocity are DEF and DEF_1, Fig. 243.

For part flow, the velocity with which the water leaves the wheel is u_1. If this is greater than u, and the wheel is drowned, or the exhaust takes place into the air, the theoretical hydraulic efficiency is less than for full load, but if the discharge is down a suction tube the velocity with which the water leaves the tube is less than for full flow and the theoretical hydraulic efficiency is greater for the part flow. The loss of head, by friction in the wheel due to the relative velocity of the water and the vane, which is less than at full load, should also be diminished, as also, the loss of head by friction in the supply and exhaust pipes. The mechanical losses remain practically constant at all loads.

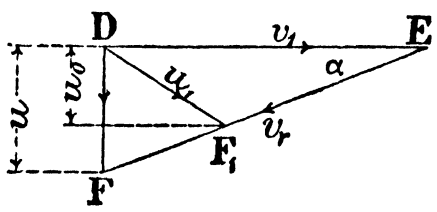

Fig. 243.

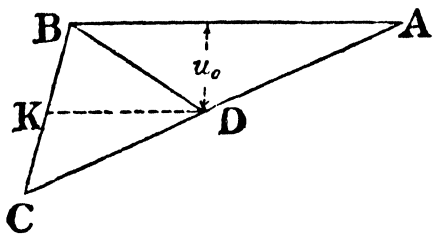

Fig. 244.

The fact that the efficiency of turbines diminishes at part loads must, therefore, in large measure be due to the losses by shock being increased more than the friction losses are diminished.

By suitably designing the vanes, the greatest efficiency of inward flow and mixed flow turbines can be obtained at some fraction of full load.

204. Regulation of the flow by cylindrical gates.

When the speed of the turbine is adjusted by a gate between the guides and the wheel, and the flow is less than the normal, the velocity U with which the water leaves the guide is altered in magnitude but not in direction.

Let ABC be the triangle of velocities, Fig. 244, when the flow is normal.

Let the flow be diminished until the velocity with which the water leaves the guides is U_0, equal to AD.

Then BD is the relative velocity of U_0 and v, and u_0 is the radial velocity of flow into the wheel.

Draw DK parallel to AB. Then for the water to move along the vane a sudden velocity equal to KD must be impressed on the water, and there is a head lost equal to $\frac{k(\text{KD})^2}{2g}$.

To keep the velocity U more nearly constant Mr Swain has introduced the gate shown in Fig. 245. The gate g is rigidly connected to the guide blades, and to adjust the flow the guide blades as well as the gate are moved. The effective width of the guides is thereby made approximately proportional to the quantity of flow, and the velocity U remains more nearly constant. If the gate is raised, the width b of the wheel opening will be greater than b_1 the width of the gate opening, and the radial velocity u_0

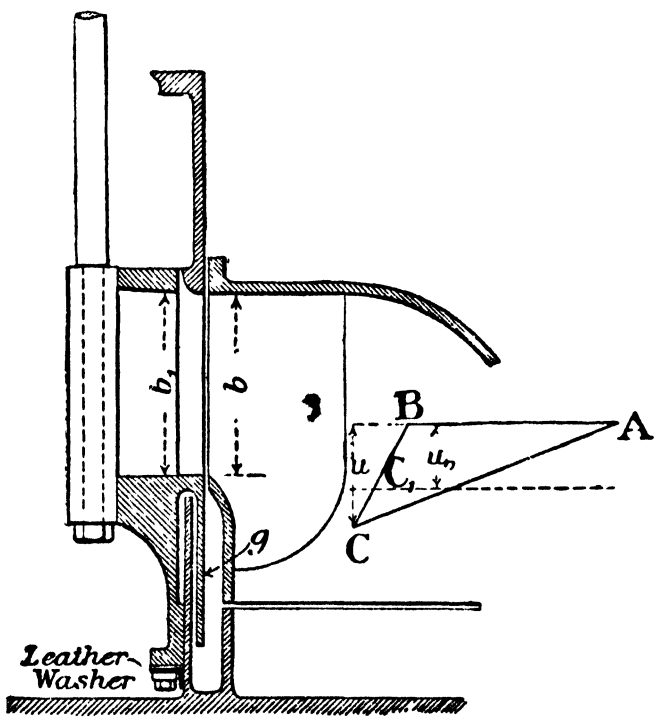

Fig. 245. Swain Gate. Fig. 246.

into the wheel will consequently be less than the radial velocity u from the guides. If U is assumed constant the relative velocity of the water and the vane will suddenly change from BC to BC_1, Fig. 246. Or it may be supposed that in the space between the guide and the wheel the velocity U changes from AC to AC_1.

The loss of head will now be $\frac{k\,(CC_1)^2}{2g}$.

205. The form of the wheel vanes between the inlet and outlet of turbines.

The form of the vanes between inlet and outlet of turbines should be such, that there is no sudden change in the relative velocity of the water and the wheel.

Consider the case of an inward flow turbine. Having given a form to the vane and fixed the width between the crowns of the wheel the velocity relative to the wheel at any radius r can be found as follows.

Take any circumferential section ef at radius r, Fig. 247. Let b be the effective width between the crowns, and d the effective width ef between the vanes, and let q be the flow in cubic feet per second between the vanes Ae and Bf.

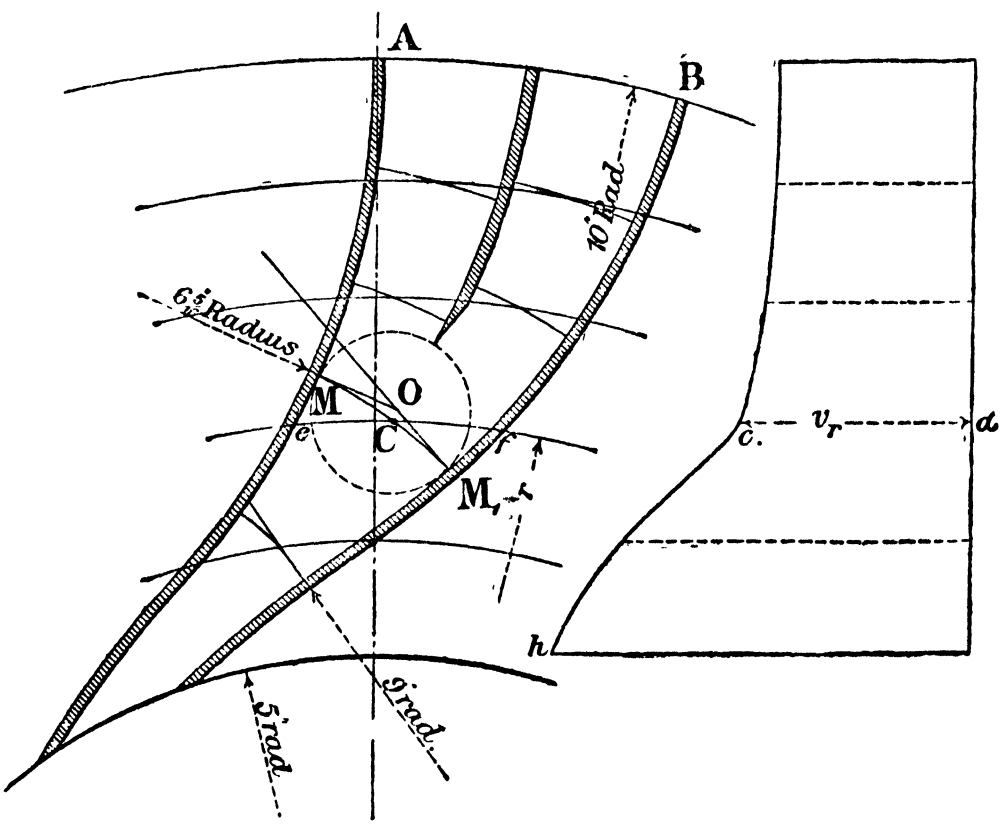

Fig. 247. Relative velocity of the water and the vanes. Fig. 248.

The radial velocity through ef is

$$u_r = \frac{q}{bd}.$$

Find by trial a point O near the centre of ef such that a circle drawn with O as centre touches the vanes at M and M_1.

Suppose the vanes near e and f to be struck with arcs of circles. Join O to the centres of these circles and draw a curve MCM_1 touching the radii OM and OM_1 at M and M_1 respectively.

Then MCM_1 will be practically normal to the stream lines through the wheel. The centre of MCM_1 may not exactly coincide with the centre of ef, but a second trial will probably make it do so.

If then, b is the effective width between the crowns at C,

$$b \,.\, MM_1 \,.\, v_r = q.$$

MM_1 can be scaled off the drawing and v_r calculated.

The curve of relative velocities for varying radii can then be plotted as shown in the figure.

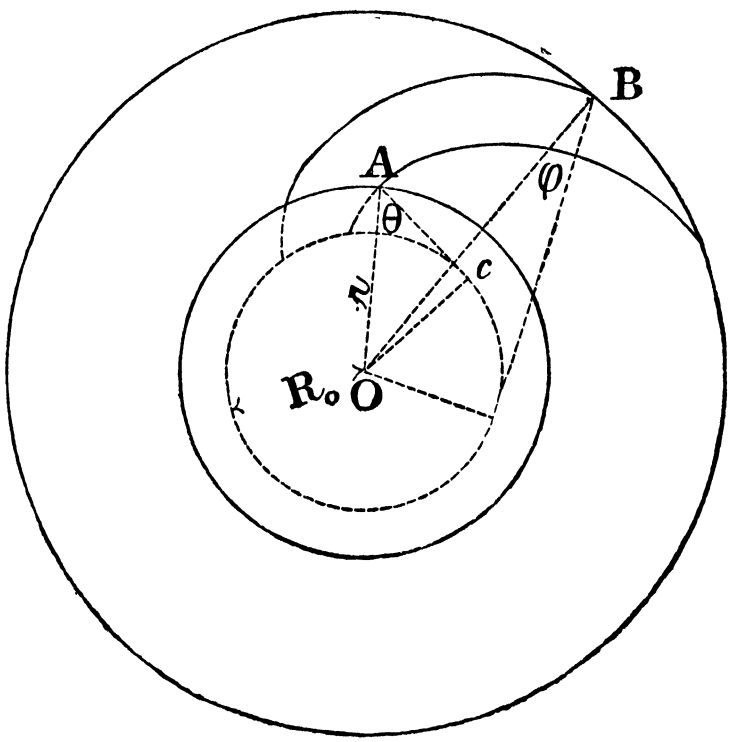

Fig. 249.

It will be seen that in this case the curve of relative velocities changes fairly suddenly between c and h. By trial, the vanes should be made so that the variation of velocity is as uniform as possible.

If the vanes could be made involutes of a circle of radius R_0,

as in Fig. 249, and the crowns of the wheel parallel, the relative velocity of the wheel and the water would remain constant. This form of vane is however entirely unsuitable for inward flow turbines and could only be used in very special cases for outward flow turbines, as the angles ϕ and θ which the involute makes with the circumferences at A and B are not independent, for from the figure it is seen that,

$$\sin\theta = \frac{R_0}{r}$$

and

$$\sin\phi = \frac{R_0}{R},$$

or

$$\frac{\sin\theta}{\sin\phi} = \frac{R}{r}.$$

The angle θ must clearly always be greater than ϕ.

206. The limiting head for a single stage reaction turbine.

Reaction turbines have not yet been made to work under heads higher than 430 feet, impulse turbines of the types to be presently described being used for heads greater than this value.

From the triangle of velocities at inlet of a reaction turbine, *e.g.* Fig. 226, it is seen that the whirling velocity V cannot be greater than

$$v + u\cot\phi.$$

Assuming the smallest value for ϕ to be 30 degrees, and the maximum value for u to be $0{\cdot}25\sqrt{2gH}$, the general formula

$$\frac{Vv}{g} = eH$$

becomes, for the limiting case,

$$v\,(v + 2\sqrt{3}\sqrt{H}) = e\,.\,g\,.\,H.$$

If v is assumed to have a limiting value of 100 feet per second, which is higher than generally allowed in practice, and e to be 0·8, then the maximum head H which can be utilised in a one stage reaction turbine, is given by the equation

$$25{\cdot}6H - 346\sqrt{H} = 10{,}000,$$

from which H = 530 feet.

207. Series or multiple stage reaction turbines.

Professor Osborne Reynolds has suggested the use of two or more turbines in series, the same water passing through them successively, and a portion of the head being utilised in each.

For parallel flow turbines, Reynolds proposed that the wheels

and fixed blades be arranged alternately as shown in Fig. 250*. This arrangement, although not used in water turbines, is very largely used in reaction steam turbines.

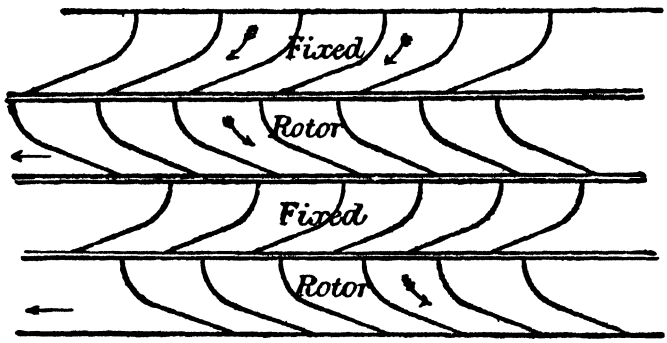

Fig. 250.

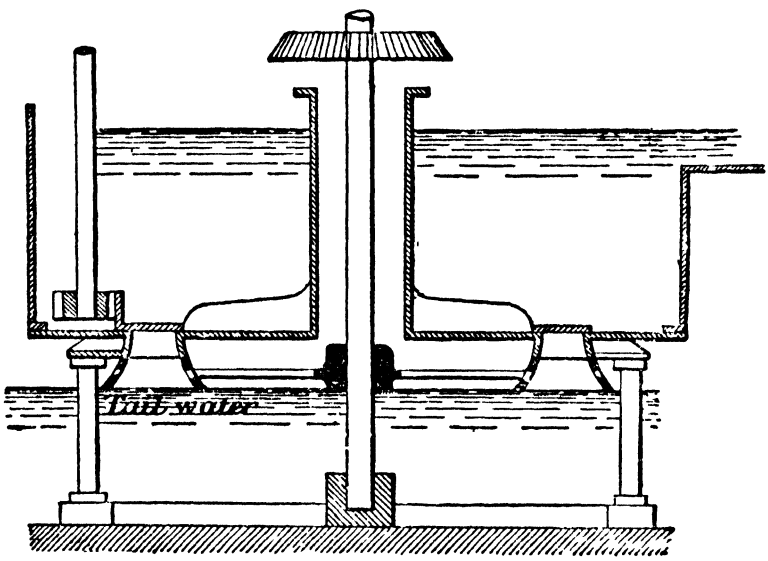

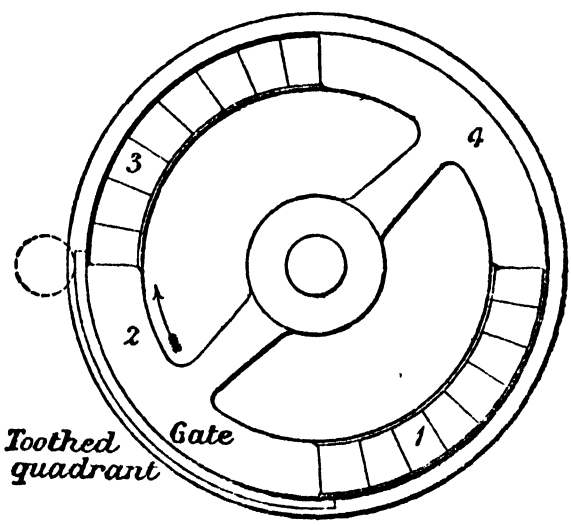

Figs. 251, 252. Axial Flow Impulse Turbine.

* Taken from Prof. Reynolds' *Scientific Papers*, Vol. I.

208. Impulse turbines.

Girard turbine. To overcome the difficulty of diminution of efficiency with diminution of flow, Girard introduced, about 1850, the free deviation or partial admission turbine.

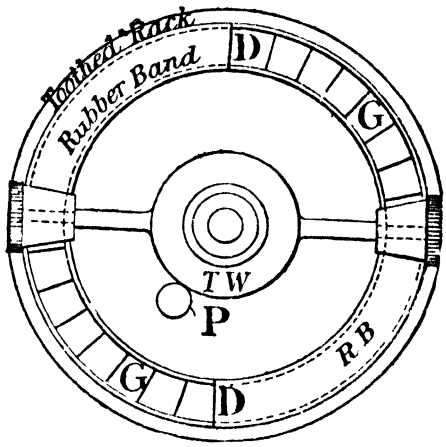

Fig. 253.

Instead of the water being admitted to the wheel throughout the whole circumference as in the reaction turbines, in the Girard turbine it is only allowed to enter the wheel through guide passages in two diametrically opposite quadrants as shown in Figs. 252—254. In the first two, the flow is axial, and in the last radial.

In Fig. 252 above the guide crown are two quadrant-shaped plates or gates 2 and 4, which are made to rotate about a vertical axis by means of a toothed wheel. When the gates are over the quadrants 2 and 4, all the guide passages are open, and by turning the gates in the direction of the arrow, any desired number of the passages can be closed. In Fig. 254 the variation of flow is effected by means of a cylindrical quadrant-shaped sluice, which, as in the previous case, can be made to close any desired number of the guide passages. Several other types of regulators for impulse turbines were introduced by Girard and others.

Fig. 253 shows a regulator employed by Fontaine. Above the guide blades, and fixed at the opposite ends of a diameter DD, are two indiarubber bands, the other ends of the bands being connected to two conical rollers. The conical rollers can rotate on journals, formed on the end of the arms which are connected to the toothed wheel TW. A pinion P gears with TW, and by rotating the spindle carrying the pinion P, the rollers can be made to unwrap, or wrap up, the indiarubber band, thus opening or closing the guide passages.

As the Girard turbine is not kept full of water, the whole of the available head is converted into velocity before the water enters the wheel, and the turbine is a pure impulse turbine.

To prevent loss of head by broken water in the wheel, the air should be freely admitted to the buckets as shown in Figs. 252 and 254.

For small heads the wheel must be horizontal but for large heads it may be vertical.

This class of turbine has the disadvantage that it cannot

run drowned, and hence must always be placed above the tail water. For low and variable heads the full head cannot therefore be utilised, for if the wheel is to be clear of the tail water, an amount of head equal to half the width of the wheel must of necessity be lost.

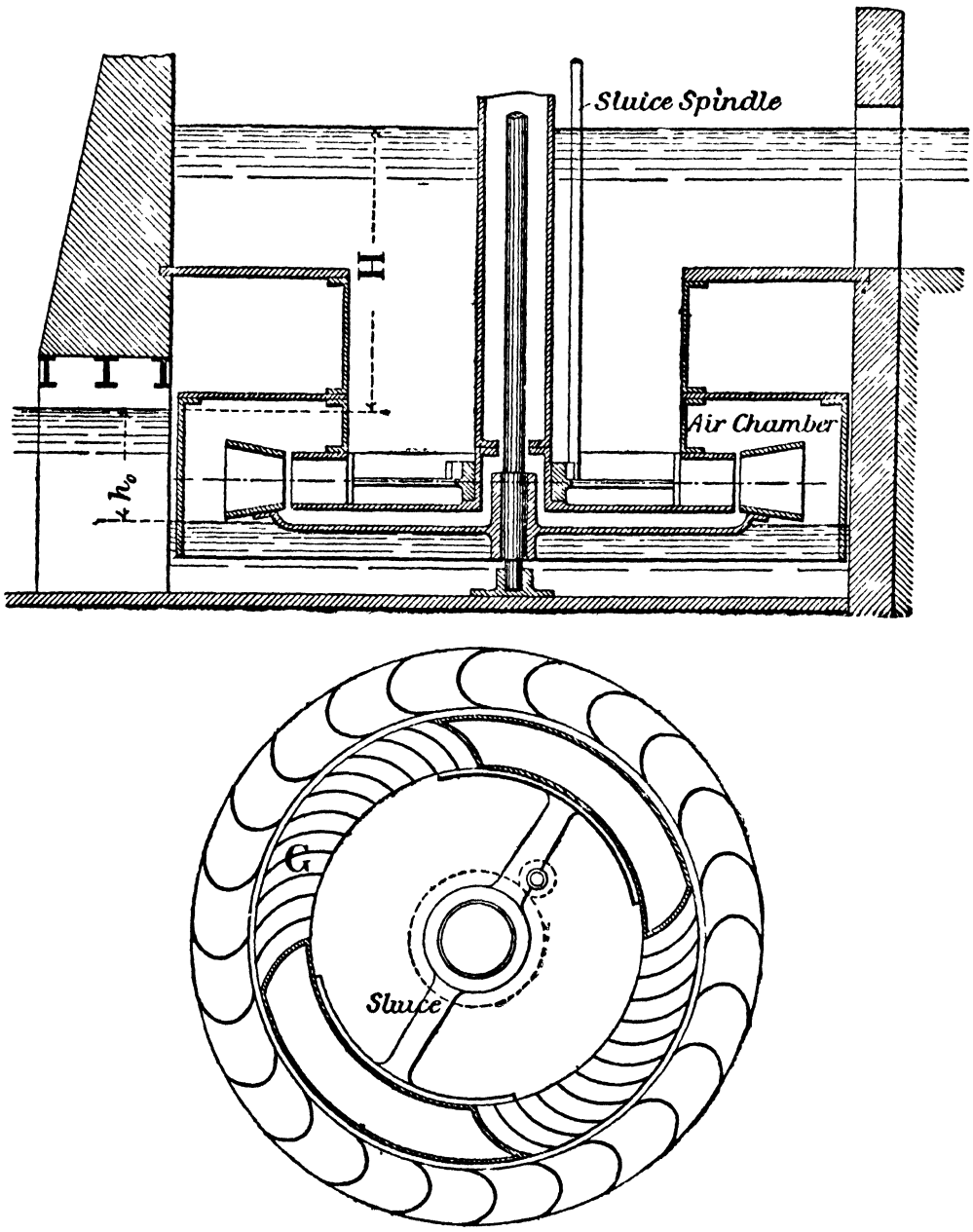

Fig. 254. Girard Radial flow Impulse Turbine.

To overcome this difficulty Girard placed the wheel in an air-tight tube, Fig. 254, the lower end of which is below the tail water level, and into which air is pumped by a small auxiliary air-pump, the pressure being maintained at the necessary value to keep the surface of the water in the tube below the wheel.

Let H be the total head above the tail water level of the supply water, $\frac{p_a}{w}$ the pressure head due to the atmospheric pressure, H_0 the distance of the centre of the wheel below the surface of the supply water, and h_0 the distance of the surface of the water in the tube below the tail water level. Then the air-pressure in the tube must be

$$\frac{p_a}{w} + h_0,$$

and the head causing velocity of flow into the wheel is, therefore,

$$\frac{p_a}{w} + H_0 - \left(\frac{p_a}{w} + h_0\right) = H.$$

So that wherever the wheel is placed in the tube below the tail water the full fall H is utilised.

This system, however, has not found favour in practice, owing to the difficulty of preserving the pressure in the tube.

209. The form of the vanes for impulse turbines, neglecting friction.

The receiving tip of the vane should be parallel to the relative velocity V_r of the water and the edge of the vane, Fig. 255.

For the axial flow turbine v_1 equals v and the relative velocity v_r at exit, Fig. 255, neglecting friction, is equal to the relative velocity V_r at inlet. The triangle of velocities at exit is AGB.

For the radial flow turbine, Figs. 254 and 258, there is a centrifugal head impressed on the water equal to $\frac{v_1^2}{2g} - \frac{v^2}{2g}$ and, neglecting friction, $\frac{v_r^2}{2g} = \frac{V_r^2}{2g} + \frac{v_1^2}{2g} - \frac{v^2}{2g}$. The triangle of velocities at exit is then DEF, Fig. 256, and U_1 equals DF.

If the velocity with which the water leaves the wheel is U_1, the theoretical hydraulic efficiency is

$$E = \frac{H - \frac{U_1^2}{2g}}{H} = 1 - \frac{U_1^2}{U^2}$$

and is independent of the direction of U_1.

It should be observed, however, that in the radial flow turbine the area of the section of the stream by the circumference of the wheel, for a given flow, will depend upon the radial component of U_1, and in the axial flow turbine the area of the section of the stream by a plane perpendicular to the axis will depend upon the axial component of U_1. That is, in each case the area will depend upon the component of U_1 perpendicular to v_1.

Now the section of the stream must not fill the outlet area of the wheel, and the minimum area of this outlet so that it is just not filled will clearly be obtained for a given value of U_1 when U_1 is perpendicular to v_1*, or is radial in the outward flow and axial in the parallel flow turbine.

For the parallel flow turbine since BC and BG, Fig. 255, are equal, U_1 is clearly perpendicular to v_1 when

$$v = \frac{V}{2} = \tfrac{1}{2}\sqrt{2gH}\cos\theta,$$

and the inclinations α and ϕ of the tips of the vanes are equal.

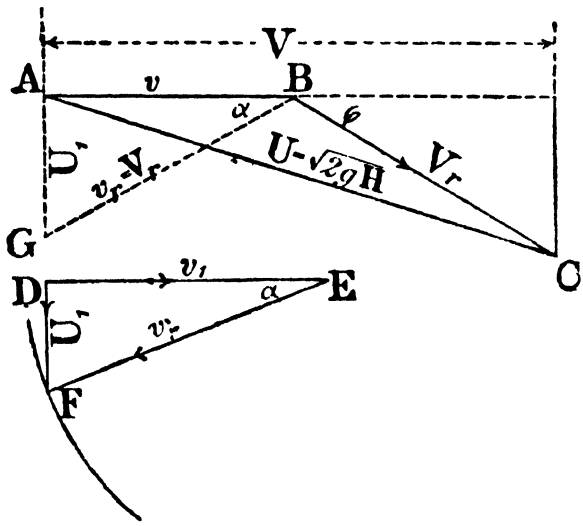

Figs. 255, 256.

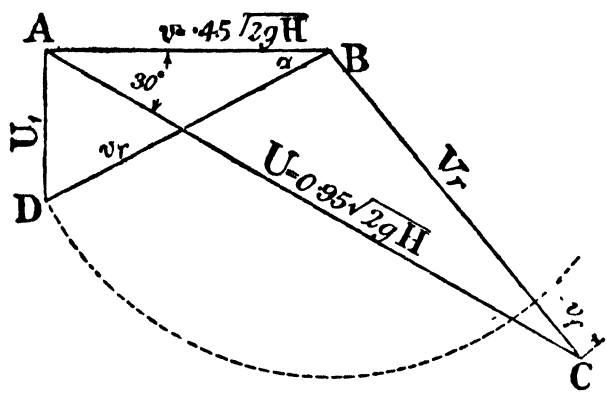

Fig. 257.

If R and r are the outer and inner radii of the radial flow turbine respectively,

$$v_1 = v\frac{R}{r}.$$

* It is often stated that this is the condition for maximum efficiency but it only is so, as stated above, for maximum flow for the given machine. The efficiency only depends upon the magnitude of U_1 and not upon its direction.

For U_1 to be radial

$$v_r = v_1 \sec \alpha$$
$$= \frac{v \,.\, R}{r} \sec \alpha.$$

If for the parallel flow turbine v is made equal to $\frac{V}{2}$, V_r from Fig. 255 is equal to $\frac{V}{2} \sec \phi$, and therefore,

$$\sec \alpha = \frac{r}{R} \sec \phi.$$

210. Triangles of velocity for an axial flow impulse turbine considering friction.

The velocity with which the water leaves the guide passages may be taken as from 0·94 to $0{\cdot}97\sqrt{2gH}$, and the hydraulic losses in the wheel are from 5 to 10 per cent.

If the angle between the jet and the direction of motion of the vane is taken as 30 degrees, and U is assumed as $0{\cdot}95\sqrt{2gH}$, and v as $0{\cdot}45\sqrt{2gH}$, the triangle of velocities is ABC, Fig. 257.

Taking 10 per cent. of the head as being lost in the wheel, the relative velocity v_r at exit can be obtained from the expression

$$\frac{v_r^2}{2g} = \frac{V_r^2}{2g} - 0{\cdot}1H.$$

If now the velocity of exit U_1 be taken as $0{\cdot}22\sqrt{2gH}$, and circles with A and B as centres, and U_1 and v_r as radii be described, intersecting in D, ABD the triangle of velocities at exit is obtained, and U_1 is practically axial as shown in the figure. On these assumptions the best velocity for the rim of the wheel is therefore $\cdot 45\sqrt{2gH}$ instead of $\cdot 5\sqrt{2gH}$.

The head lost due to the water leaving the wheel with velocity u is ·048H, and the theoretical hydraulic efficiency is therefore 95·2 per cent.

The velocity head at entrance is 0·9025H and, therefore, ·097H has been lost when the water enters the wheel.

The efficiency, neglecting axle friction, will be

$$e = \frac{H - 0{\cdot}1H - 0{\cdot}048H - 0{\cdot}097H}{H}$$
$$= 76 \text{ per cent. nearly.}$$

211. Impulse turbine for high heads.

For high heads Girard introduced a form of impulse turbine, of which the turbine shown in Figs. 258 and 259, is the modern development.

The water instead of being delivered through guides over an arc of a circle, is delivered through one or more adjustable nozzles.

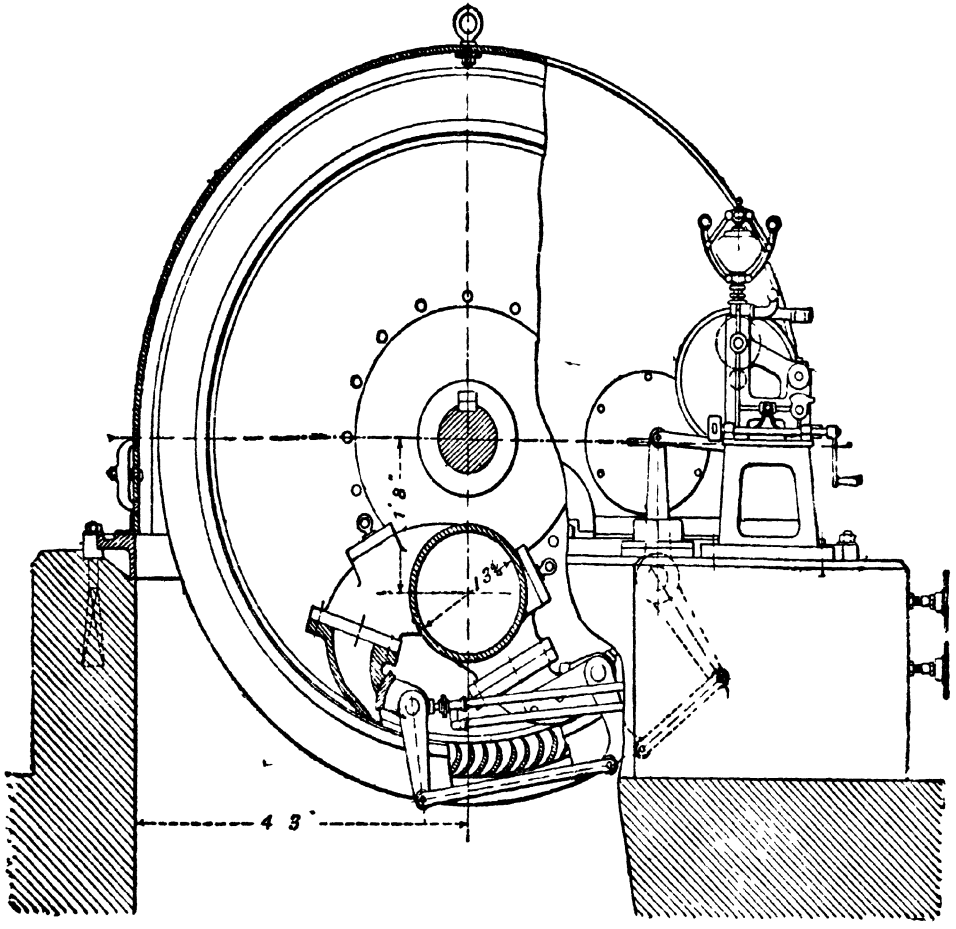

Fig. 258. Impulse Turbine for high head. (Pictet and Co.).

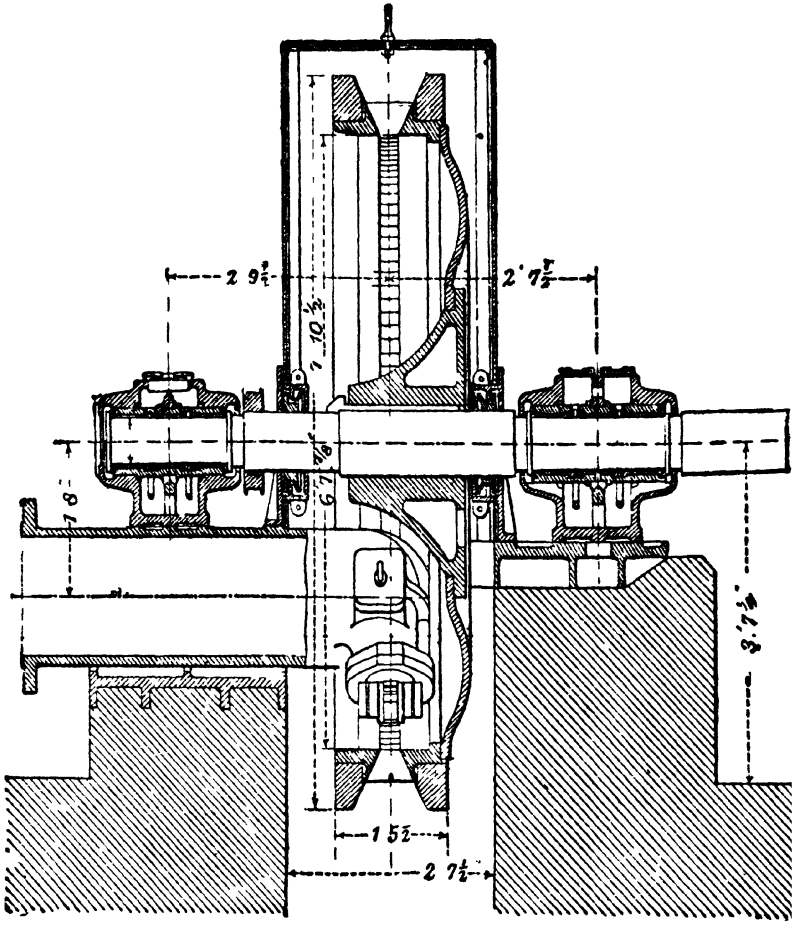

Fig. 259.

In the example shown, the wheel has a mean diameter of 6·9 feet and makes 500 revolutions per minute; it develops 1600 horse-power under a head of 1935 feet.

The supply pipe is of steel and is 1·312 feet diameter.

The form of the orifices has been developed by experience, and is such that there is no sudden change in the form of the liquid vein, and consequently no loss due to shock.

The supply of water to the wheel is regulated by the sluices shown in Fig. 258, which, as also the axles carrying the same, are external to the orifices, and can consequently be lubricated while the turbine is at work. The sluices are under the control of a sensitive governor and special form of regulator.

As the speed of the turbine tends to increase the regulator moves over a bell crank lever and partially closes both the orifices. Any decrease in speed of the turbine causes the reverse action to take place.

The very high peripheral speed of the wheel, 205 feet per second, produces a high stress in the wheel due to centrifugal forces. Assuming the weight of a bar of the metal of which the rim is made one square inch in section and one foot long as 3·36 lbs., the stress per sq. inch in the hoop surrounding the wheel is

$$f = \frac{3{\cdot}36 \,.\, v^2}{g}$$

$$= 4400 \text{ lbs. per sq. inch.}$$

To avoid danger of fracture, steel laminated hoops are shrunk on to the periphery of the wheel.

The crown carrying the blades is made independent of the disc of the wheel, so that it may be replaced when the blades become worn, without an entirely new wheel being provided.

The velocity of the vanes at the inner periphery is 171 feet per second, and is, therefore, $0{\cdot}484\sqrt{2gH}$.

If the velocity U with which the water leaves the orifice is taken as $0{\cdot}97\sqrt{2gH}$, and the angle the jet makes with the tangent to the wheel is 30 degrees, the triangle of velocities at entrance is ABC, Fig. 260, and the angle ϕ is 53·5 degrees.

The velocity v_1 of the outer edges of the vanes is 205 feet per second, and assuming there is a loss of head in the wheel, equal to 6 per cent. of H,

$$\frac{v_r^2}{2g} = \frac{V_r^2}{2g} + \frac{205^2}{2g} - \frac{171^2}{2g} - 0{\cdot}06H,$$

and $$v_r = 220 \text{ ft. per second.}$$

If then the angle α is 30 degrees the triangle of velocities at exit is DEF, Fig. 260.

The velocity with which the water leaves the wheel is then $U_1 = 111$ feet per sec., and the head lost by this velocity is 191 feet or ·099H.

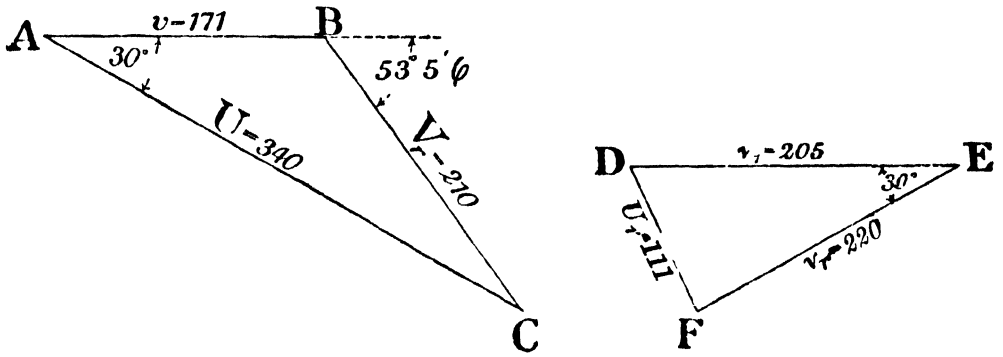

Fig. 260.

The head lost in the pipe and nozzle is, on the assumption made above,

$$H - (0{\cdot}97)^2 H = 0{\cdot}06H,$$

and the total percentage loss of head is, therefore,

$$6 + 9{\cdot}9 + 6 = 21{\cdot}9,$$

and the hydraulic efficiency is 78·1 per cent.

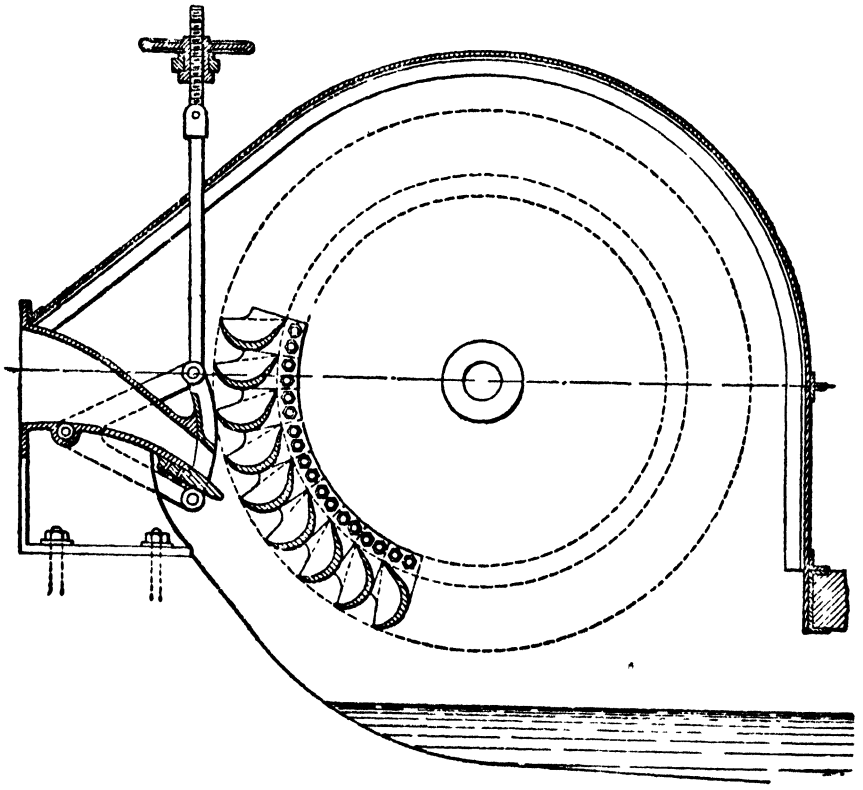

Fig. 261. Pelton Wheel.

The actual efficiency of a similar turbine at full load was found by experiment to be 78 per cent.; allowing for mechanical losses the hydraulic losses were less than in the example.

A modification of the Girard turbine has been described by Mr E. Crewdson* in which the type of nozzle shown in Fig. 262 has been used and the buckets arranged so that the water moves through the wheel in a direction parallel to the axis. On a head of 200 feet an efficiency of 83 5 per cent. has been obtained.

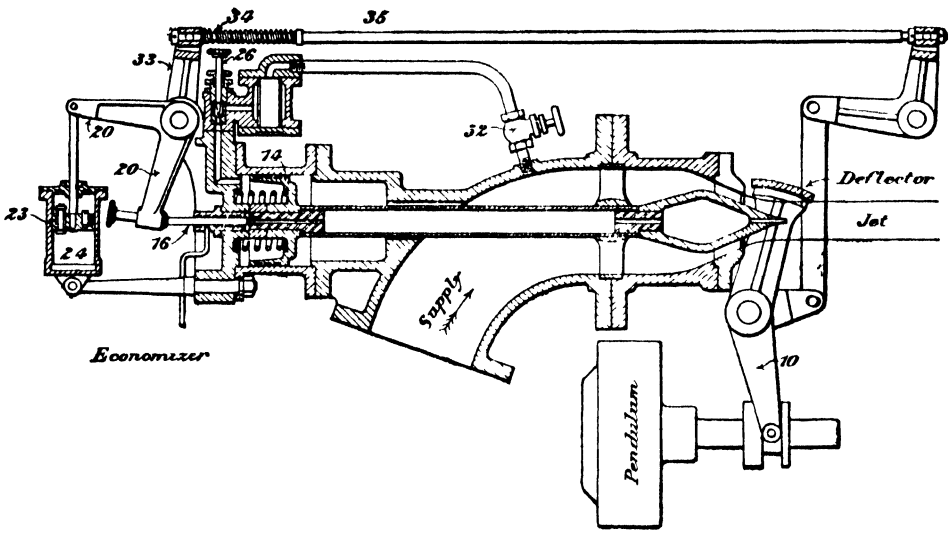

Fig 262. Nozzle and Governor of Turgo turbine.

212. Pelton wheel.

A form of impulse turbine now very largely used for high heads is known as the Pelton wheel.

A number of cups, as shown in Figs. 261 and 266, are fixed to a wheel which is generally mounted on a horizontal axis. The water is delivered to the wheel through a rectangular shaped, or circular, nozzle, the opening of which is generally made adjustable, either by means of a hand wheel as in Fig. 261, or automatically by a regulator as in Fig. 266.

As shown on page 276, the theoretical efficiency of the wheel is unity and the best velocity for the cups is one-half the velocity of the jet. The velocity generally given to the cups in actual examples is from $0{\cdot}45\sqrt{2gH}$ to $0{\cdot}5\sqrt{2gH}$. The width of the cups is from $2\frac{1}{2}$ to 4 times the thickness of the jet, and the width of the jet is about twice its thickness. Fig. 263 shows photographs of a cup.

* *Proc. Inst. C.E.*, 1922.

The actual efficiency is between 70 and 82 per cent.

Very large Pelton wheels are now being made. At Caribou, California, a Pelton wheel of 30,000 H.P. working under a head of 1008 feet and running at 171 revolutions per minute has been

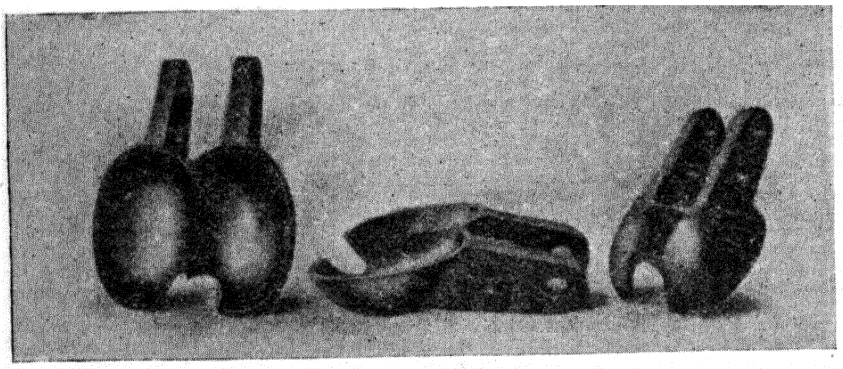

Fig. 263. Cups of Pelton Wheel.

installed. The disc is 11 feet diameter, the buckets are each 42 inches wide and the jet is 11 inches diameter. Table XXXVIII gives the numbers of revolutions per minute, the diameters of the wheels and the nett head at the nozzle in a number of examples.

TABLE XXXVIII.

Particulars of some actual Pelton wheels.

Head in feet	Diameter of wheel (two wheels)	Revolutions per minute	v	U	H.P.
262	39·4″	375	64·5	129	500
233	7″	2100	64	125	5
197	20″	650	56·5	112	10
722	39″	650	111	215	167
382	60″	300	79	156	144
289	54″	310	73	136	400
508	90″	200	79	180	300
1008		171			30000
900		333½			14300

213. Oil pressure governor or regulator.

The modern application of turbines to the driving of electrical machinery has made it necessary for particular attention to be paid to the regulation of the speed of the turbines.

The methods of regulating the flow by cylindrical speed gates and moveable guide blades have been described in connection with

various turbines but the means adopted for moving the gates and guides have not been discussed.

Until recent years some form of differential governor was almost entirely used, but these have been almost completely superseded by hydraulic and oil governors.

Fig. 264 shows an oil* governor, as constructed by Messrs Escher Wyss of Zurich.

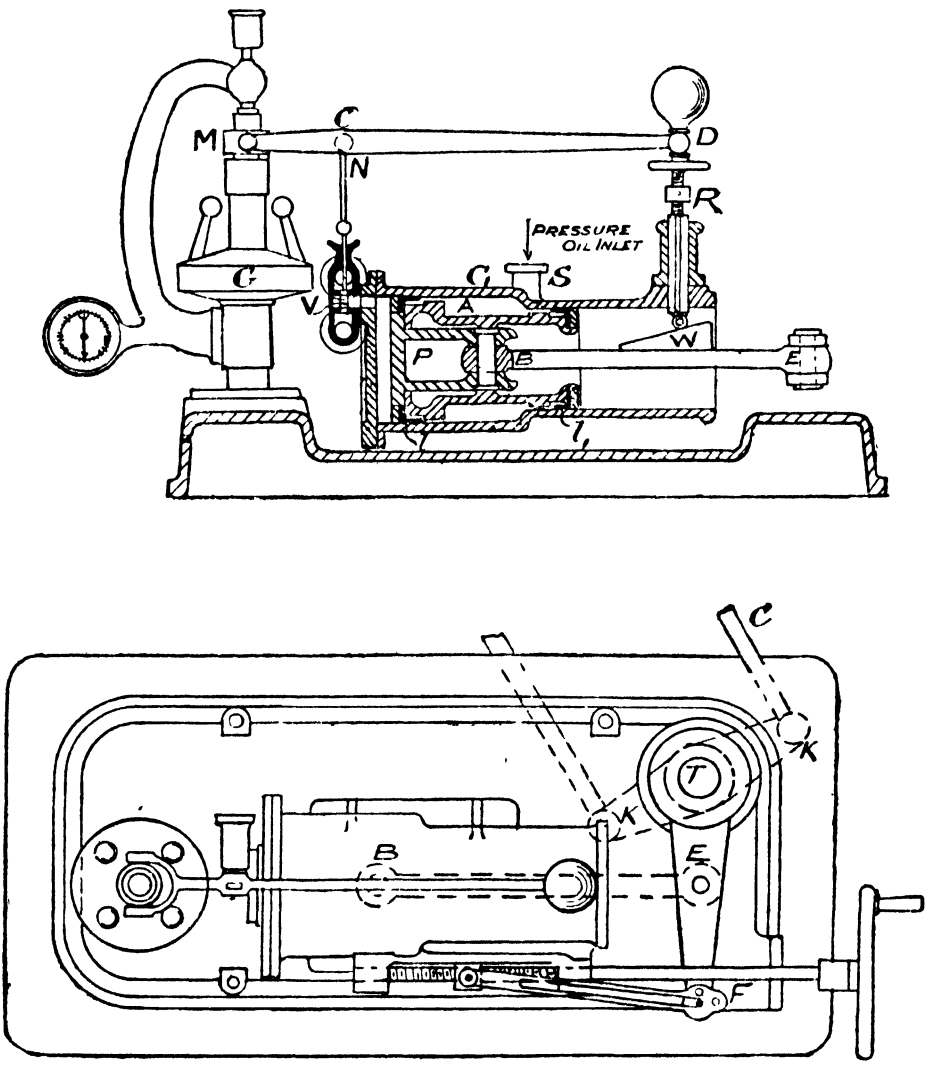

Fig. 264 Oil Pressure Regulator for Turbines.

A piston P having a larger diameter at one end than at the other, and fitted with leathers l and l_1, fits into a double cylinder C_1. Oil under pressure is continuously supplied through a pipe S into the annulus A between the pistons, while at the back of the large piston the pressure of the oil is determined by the regulator.

* See *Engineering*, Aug. 2nd, 1912 and *Proc. Inst. Mech. Engineers*, 1920.

Suppose the regulator to be in a definite position, the space behind the large piston being full of oil, and the turbine running at its normal speed. The valve V (an enlarged diagrammatic section is shown in Fig. 265) will be in such a position that oil cannot enter or escape from the large cylinder, and the pressure in the annular ring between the pistons will keep the regulator mechanism locked.

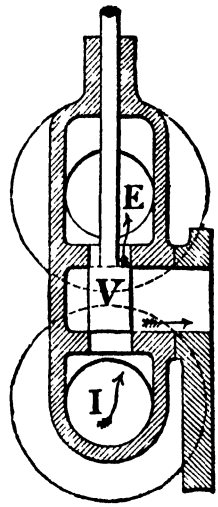

Fig. 265.

If the wheel increases in speed, due to a diminution of load, the balls of the spring loaded governor G move outwards and the sleeve M rises. For the moment, the point D on the lever MD is fixed, and the lever turns about D as a fulcrum, and thus raises the valve rod NV. This allows oil under pressure to enter the large cylinder and the piston in consequence moves to the right, and moves the turbine gates in the manner described later. As the piston moves to the right, the rod R, which rests on the wedge W connected to the piston, falls, and the point D of the lever MD consequently falls and brings the valve V back to its original position. The piston P thus takes up a new position corresponding to the required gate opening. The speed of the turbine and of the governor is a little higher than before, the increase in speed depending upon the sensitiveness of the governor. On the other hand, if the speed of the wheel diminishes, the sleeve M and also the valve V falls and the oil from behind the large piston escapes through the exhaust E, the piston moving to the left. The wedge W then lifts the fulcrum D, the valve V is automatically brought to its central position, and the piston P takes up a new position, consistent with the gate opening being sufficient to supply the necessary water required by the wheel.

A hand wheel and screw, Fig. 264, are also provided, so that the gates can be moved by hand when necessary.

The piston P is connected by the connecting rod BE to a crank EF, which rotates the vertical shaft T. A double crank KK is connected by the two coupling rods shown to a rotating toothed wheel R, Fig. 241, turning about the vertical shaft of the turbine, and the movement, as described on page 360, causes the adjustment of the speed gates.

214. Water pressure regulators for impulse turbines.

Fig. 266 shows a water pressure regulator as applied to regulate the flow to a Pelton wheel*.

The area of the supply nozzle is adjusted by a beak B which

* A nozzle type is shown in Fig. 262.

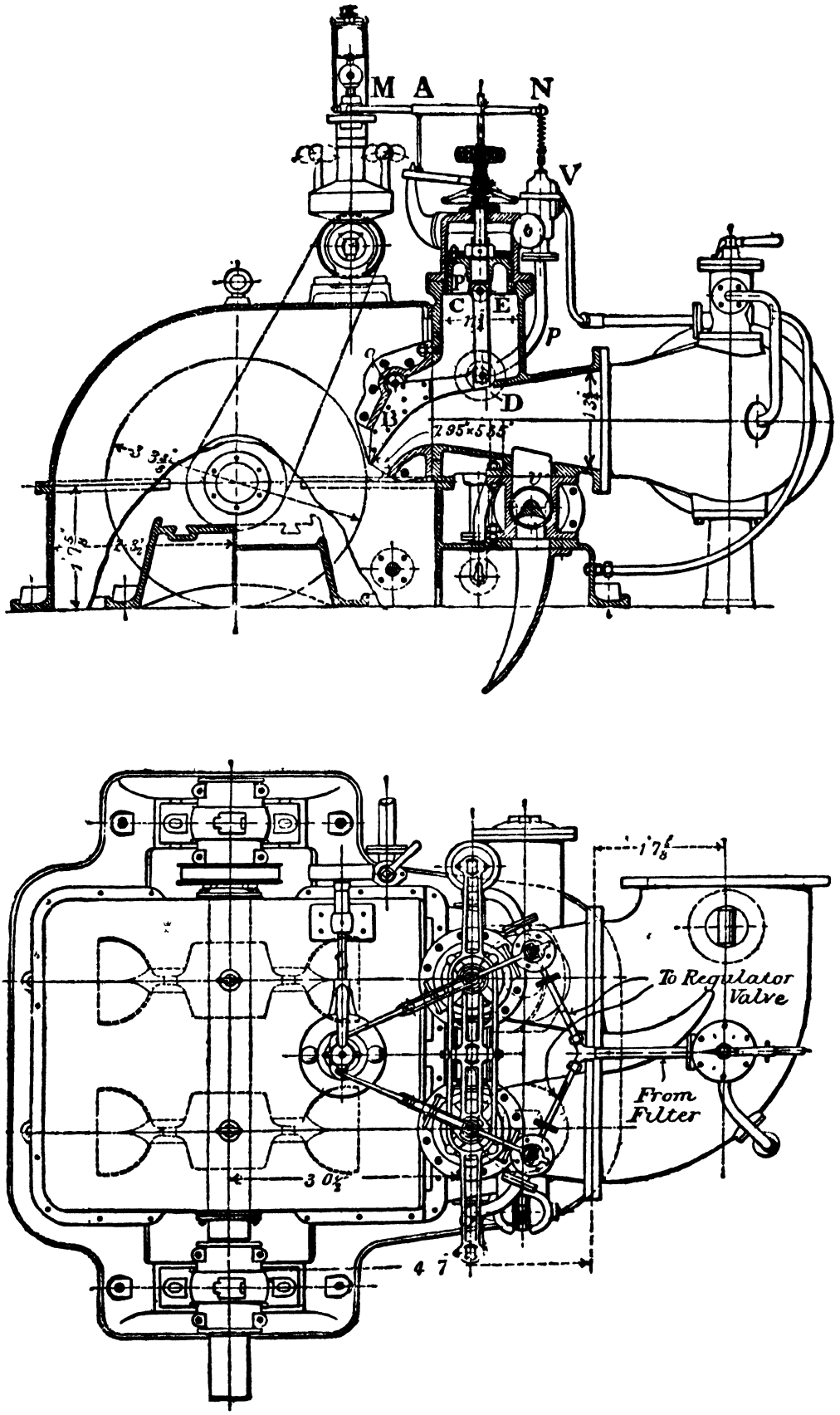

Fig. 266. Pelton Wheel and Water Pressure Regulator.

rotates about the centre O. The pressure of the water in the supply pipe acting on this beak tends to lift it and thus to open the orifice. The piston P, working in a cylinder C, is also acted upon, on its under side, by the pressure of the water in the supply pipe and is connected to the beak by the connecting rod DE. The area of the piston is made sufficiently large so that when the top of the piston is relieved of pressure the pull on the connecting rod is sufficient to close the orifice.

The pipe *p* conveys water under the same pressure, to the valve V, which may be similar to that described in connection with the oil pressure governor, Fig. 265.

A piston rod passes through the top of the cylinder, and carries a nut, which screws on to the square thread cut on the rod. A lever *eg*, Fig. 267, which is carried on the fixed fulcrum *e*, is made to move with the piston. A link *f*A connects *ef* with the lever MN, one end M of which moves with the governor sleeve and the other end N is connected to the valve rod NV. The valve V is shown in the neutral position.

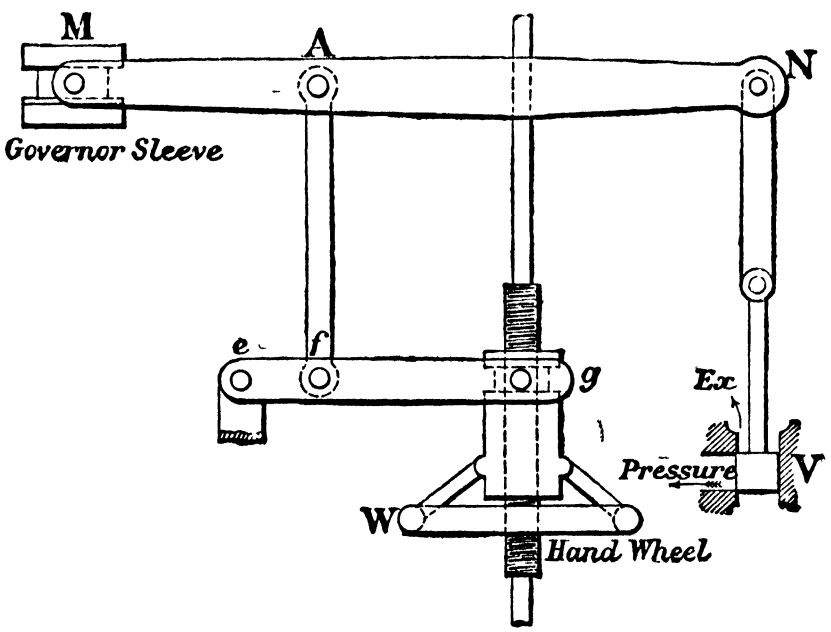

Fig. 267.

Suppose now the speed of the turbine to increase. The governor sleeve rises, and the lever MN turns about the fulcrum A which is momentarily at rest. The valve V falls and opens the top of the cylinder to the exhaust. The pressure on the piston P now causes it to rise, and closes the nozzle, thus diminishing the supply to the turbine. As the piston rises it lifts again the lever MN by means of the link A*f*, and closes the valve V. A new position of equilibrium is thus reached. If the speed of the

governor decreases the governor sleeve falls, the valve V rises, and water pressure is admitted to the top of the piston, which is then in equilibrium, and the pressure on the beak B causes it to move upwards and thus open the nozzle.

Hydraulic valve for water regulator. Instead of the simple piston valve controlled mechanically, Messrs Escher Wyss use, for high heads, a hydraulic double-piston valve P*p*, Fig. 268.

This piston valve has a small bore through its centre by means of which high pressure water which is admitted below the valve can pass to the top of the large piston P. Above the piston is a small plug valve V which is opened and closed by the governor.

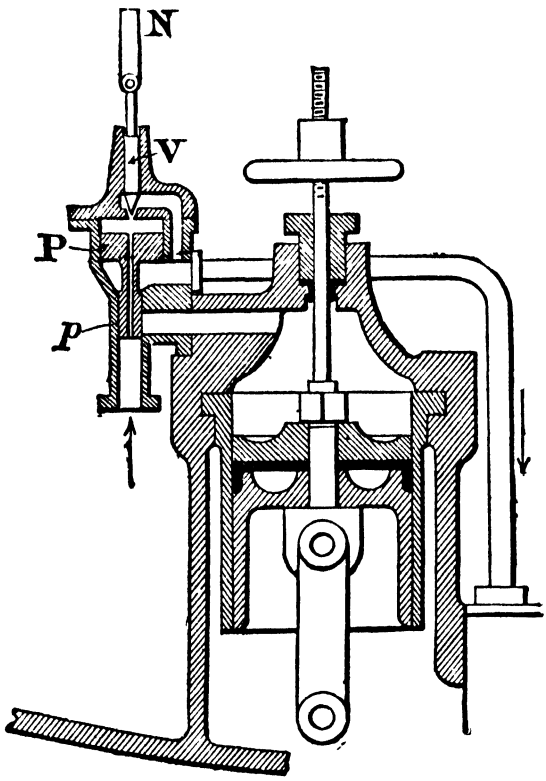

Fig. 268. Hydraulic valve for automatic regulation.

If the speed of the governor decreases, the valve V is opened, thus allowing water to escape from above the piston valve, and the pressure on the lower piston *p* raises the valve. Pressure water is thus admitted above the regulator piston, and the pressure on the beak opens the nozzle. As the governor falls the valve V closes, the exhaust is throttled, and the pressure above the piston P rises. When the exhaust through V is throttled to such a degree that the pressure on P balances the pressure on the under face of the piston *p*, the valve is in equilibrium and the regulator piston is locked.

If the speed of the governor increases, the valve V is closed, and the excess pressure on the upper face of the piston valve causes it to descend, thus connecting the regulator cylinder to exhaust. The pressure on the under face of the regulator piston then closes the nozzle.

Filter. Between the conduit pipe and the governor valve V, is placed a filter, Fig. 269, to remove any sand or grit contained in the water.

Within the cylinder, on a hexagonal frame, is stretched a piece of canvas. The water enters the cylinder by the pipe E, and after passing through the canvas, enters the central perforated pipe and leaves by the pipe S.

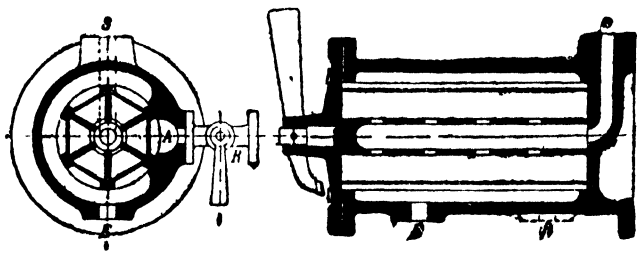

Fig. 269. Water Filter for Impulse Turbine Regulator.

To clean the filter while at work, the canvas frame is revolved by means of the handle shown, and the cock R is opened. Each side of the hexagonal frame is brought in turn opposite the chamber A, and water flows outwards through the canvas and through the cock R, carrying away any dirt that may have collected outside the canvas.

Auxiliary valve to prevent hammer action. When the pipe line is long an auxiliary valve is frequently fitted on the pipe near to the nozzle, which is automatically opened by means of a cataract motion* as the nozzle closes, and when the movement of the nozzle beak is finished, the valve slowly closes again.

If no such provision is made a rapid closing of the nozzle means that a large mass of water must have its momentum quickly changed and very large pressures may be set up, or in other words hammer action is produced, which may cause fracture of the pipe.

When there is an abundant supply of water, the auxiliary valve is connected to the piston rod of the regulator and opened and closed as the piston rod moves, the valve being adjusted so that the opening increases by the same amount that the area of the orifice diminishes.

* See *Engineer*, Vol. xc., p. 255.

If the load on the wheel does not vary through a large range the quantity of water wasted is not large.

215. Efficiency and output curves for a given turbine. If in tests of a turbine the head is kept constant and the speed varied for a given nozzle or gate opening, efficiency and power

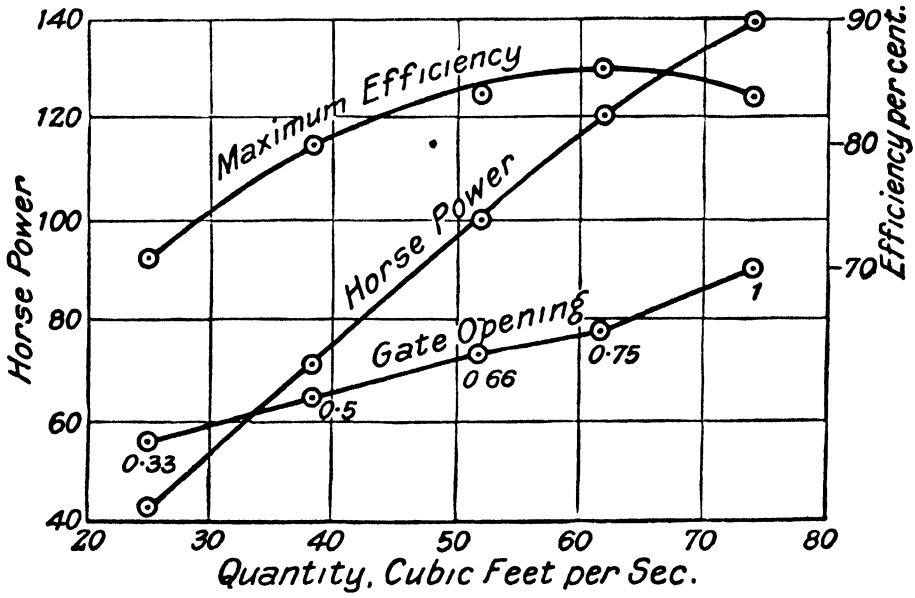

Fig. 270A. Inward Flow Turbine. 20 feet head.

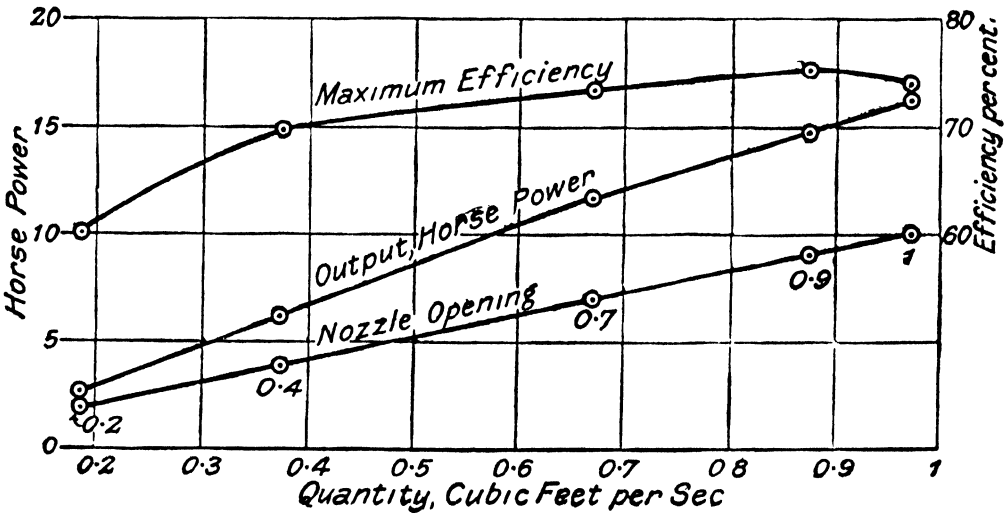

Fig. 270B. Pelton Wheel. Maximum Efficiency.

curves can be obtained as shown in Figs. 270A, 270B, and 272A. The curves in Figs. 270A and 270B show the maximum power at each gate opening and the corresponding efficiency. Fig. 272A shows the efficiency and power curves at various gate openings. When a series of such curves as shown in Fig. 272A is obtained,

what are generally called characteristic curves, of several types, can be drawn and from these it is quickly possible to determine the performances of turbines of the same type or of a single turbine under varying conditions.

215A. Similar turbines.

Consider two turbines exactly similar in form, one of which, a small turbine, has a wheel of diameter d and the other of diameter D, or in other words that the ratio of the dimensions of the large turbine to the small is

$$r = \frac{D}{d}.$$

As the machines are similar the vane angles at inlet and outlet will be the same and when the machines are running under certain conditions the triangles of velocity are similar.

Let v and v_1 be the peripheral velocities of the turbine wheels respectively and n and N their respective revolutions per unit time. Let u and u_1 be the velocities of flow at the inlet to the wheels.

Then $$\frac{u}{u_1} = \frac{v}{v_1} = \frac{nd}{ND} = r_1 \quad \ldots\ldots\ldots\ldots (1).$$

The fundamental formula for both wheels is

$$\frac{Vv}{g} = \text{Head}$$

or $$\frac{v(v - u\cot\alpha)}{g} = \text{Head}.$$

Let h and H be the heads in the respective turbines. Then

$$\frac{h}{H} = \frac{v(v - u\cot\alpha)}{v_1(v_1 - u_1\cot\alpha)} = \frac{r_1^2(v_1 - u_1\cot\alpha)}{v_1 - u_1\cot\alpha} = r_1^2.$$

From (1), $$\frac{v}{v_1} = \frac{nd}{ND} = r_1 = \sqrt{\frac{h}{H}} \quad \ldots\ldots\ldots\ldots (2).$$

The quantity of flow into the machine is proportional to the radial velocity at inlet and to the area of the wheel periphery.

If then q and Q are the respective quantities of flow into the two machines

$$\frac{q}{Q} = \frac{ud^2}{u_1 D^2} = \frac{d^2}{D^2}\sqrt{\frac{h}{H}}.$$

The ratio of the powers of the turbines will be

$$\frac{p}{P} = \frac{qh}{QH} = \frac{d^2}{D^2}\left(\frac{h}{H}\right)^{\frac{3}{2}} \quad \ldots\ldots\ldots\ldots (3),$$

or $$\frac{D}{d} = \sqrt{\frac{P}{p}}\left(\frac{h}{H}\right)^{\frac{3}{4}}.$$

Then substituting from (2)

$$\frac{n}{N} = \sqrt{\frac{P}{p}}\left(\frac{h}{H}\right)^{\frac{5}{4}} \quad \text{.....(4).}$$

Let it be supposed that it is required to design a large turbine of new type. A model of the turbine can be made and its performance under varying conditions determined. Then the performance of the large turbine can be anticipated. From equation (3) the power of the large turbine can be determined and from equation (4) the speed of the turbine, when the corresponding powers and speeds of the model are known. Experiments show that for given similar conditions the efficiency of the large machine is generally slightly larger than that of the model. This is not easily explained but an analogy may be found by comparing the efficiency of transmission of power along small and large pipes. In the smaller pipe the energy lost per pound of flow is greater than in the larger pipe, or in other words the coefficient f for the smaller pipe (see page 163) is greater than for the larger pipe.

Specific speed of the turbine. Referring to equation (4), let the head h be 1 foot and the power p be unity.

Then the speed is

$$n_s = \frac{N \cdot \sqrt{P}}{H^{\frac{5}{4}}} \quad \text{.....(5),}$$

and is called the specific speed; this should not be confused with the unit speed.

The development of turbines during the last half century can be said to have been in the direction of increasing the specific speed. The early type of Francis inward flow turbines had specific speeds of less than 20, a modern mixed flow turbine having a wheel of the form shown in Figs. 233A and 233B may have a specific speed of more than 100. Parallel flow turbines can be made with a higher specific speed than 100 and a modern type having a wheel of the propeller form (Fig. 220) has been made having a specific speed of 150.

215B. Specific speed for a Pelton wheel.

Let two Pelton wheels have diameters d and D and let them work under heads h and H. Let the velocities of the buckets of the wheels be v and v_1.

Then $$\frac{v}{v_1} = \sqrt{\frac{h}{H}}$$

and $$\frac{nd}{ND} = \sqrt{\frac{h}{H}} \quad \ldots\ldots\ldots\ldots\ldots\ldots (1),$$

where n and N are the revolutions per unit time of the wheels.

Assuming the diameters of the nozzles to be proportional to the diameters of the wheels the ratio of the quantities of water per unit time is

$$\frac{q}{Q} = \frac{d^2}{D^2}\sqrt{\frac{h}{H}} \quad \ldots\ldots\ldots\ldots \quad (2),$$

$$\frac{P}{p} = \frac{D^2}{d^2}\left(\frac{H}{h}\right)^{\frac{3}{2}} \quad \ldots\ldots\ldots\ldots\ldots\ldots (3).$$

Substituting from (1),

$$\frac{P}{p} = \frac{n^2}{N^2}\left(\frac{H}{h}\right)^{\frac{5}{2}}$$

or $$n = N\sqrt{\frac{P}{p}}\left(\frac{h}{H}\right)^{\frac{5}{4}} \quad \ldots\ldots\ldots\ldots\ldots\ldots (4).$$

When h is 1, and p is 1, the specific speed is

$$n_s = \frac{N \cdot \sqrt{P}}{H^{\frac{5}{4}}} \quad \ldots\ldots\ldots\ldots\ldots\ldots (5).$$

From (3) when D is equal to d, or in other words the same turbine is run at different speeds such that

$$\frac{N}{n} = \sqrt{\frac{H}{h}},$$

then $$\frac{P}{p} = \frac{N^3}{n^3}.$$

Performance of a given turbine of either the reaction or impulse type under varying conditions. Unit power, unit quantity, unit speed. Let a given turbine be developing P horse-power under a head H feet, when running at N revs. per minute, and using a quantity of water Q cu. ft. per sec. Then from equation (3), since d is now equal to D, the power p when h is 1 ft. is

$$p_1 = \frac{P}{H^{\frac{3}{2}}} \quad \ldots\ldots\ldots\ldots\ldots\ldots (6)$$

which may be called the unit power for the particular turbine.

If D is the diameter in feet (or it may be in inches) the power per unit diameter of one foot (or one inch if D is in inches) is

$$p = \frac{P}{D^2 . H^{\frac{3}{2}}} \quad \ldots\ldots\ldots\ldots\ldots\ldots\ldots \quad (7).$$

Again, since $v \propto \sqrt{H}$, and the quantity flowing through the machine,

$$Q \propto u \propto v \propto \sqrt{H},$$

therefore, for any other head h the quantity

$$q = Q \frac{\sqrt{h}}{\sqrt{H}}.$$

When h is one foot

$$q_1 = \frac{Q}{\sqrt{H}} \quad \ldots\ldots\ldots\ldots\ldots\ldots\ldots\ldots \quad (8);$$

this is called the unit quantity for the turbine. The unit quantity per unit diameter is

$$q = \frac{Q}{D^2 \sqrt{H}} \ldots \ldots\ldots\ldots\ldots\ldots\ldots\ldots \quad (9).$$

Further, $v \propto N \propto \sqrt{H}$.

For the head h, the revolutions

$$n = N \sqrt{\frac{h}{H}}, \quad \text{or} \quad \frac{h}{H} = \frac{n^2}{N^2},$$

and when h is 1 foot, the unit speed

$$N_1 = \frac{N}{\sqrt{H}} \quad \ldots\ldots\ldots\ldots\ldots\ldots\ldots\ldots \quad (10),$$

or unit speed per unit diameter is

$$\frac{ND}{\sqrt{H}} \quad \ldots\ldots\ldots\ldots\ldots\ldots\ldots\ldots \quad (11).$$

Under any head, H_0,

$$P_0 = \frac{PH_0^{\frac{3}{2}}}{H^{\frac{3}{2}}},$$

$$Q_0 = \frac{Q\sqrt{H_0}}{\sqrt{H}},$$

and

$$N_0 = \frac{N\sqrt{H_0}}{\sqrt{H}}.$$

215c. Characteristic curves of turbines.

Let it be supposed that from a series of tests on a turbine under varying conditions of head, speed and gate opening, efficiency and power curves have been determined and plotted. In Fig. 272A are shown such curves for a Pelton wheel but similar curves may

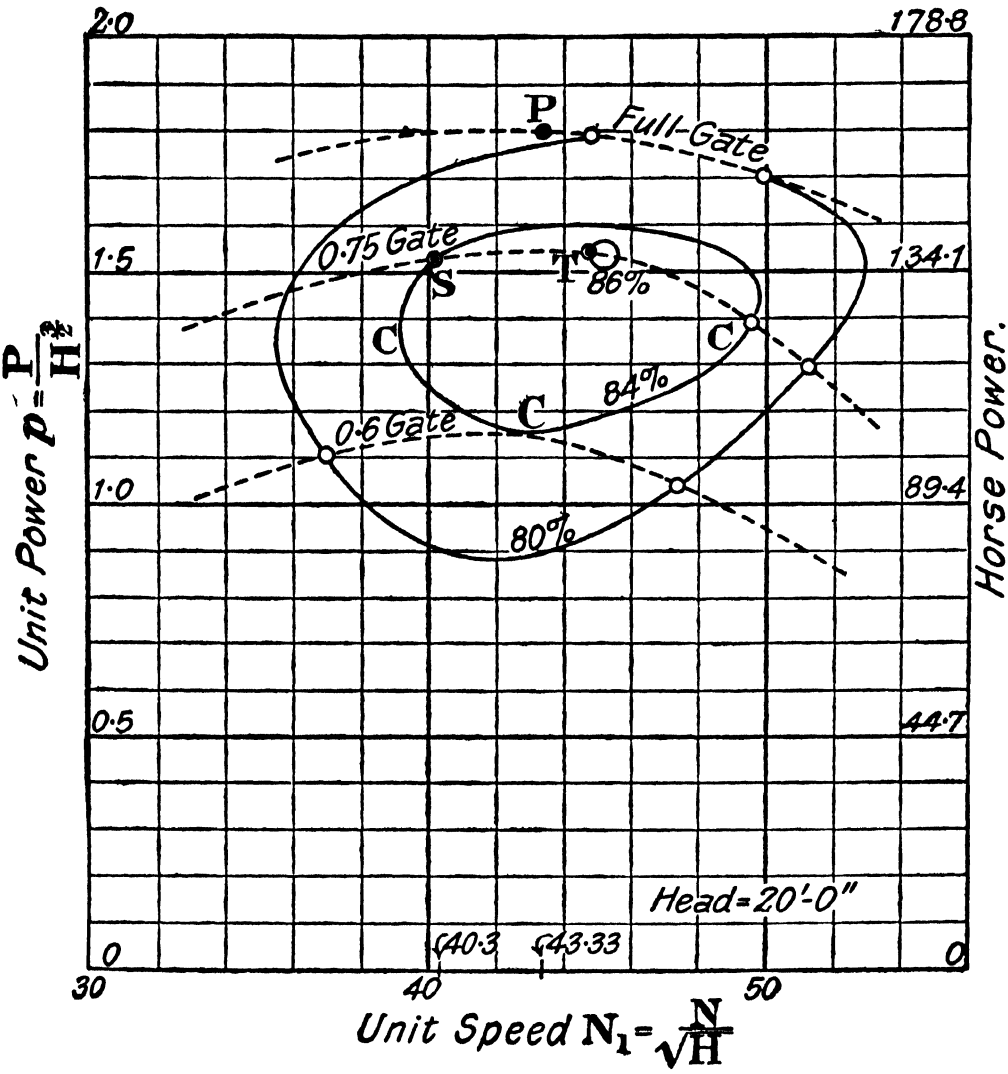

Fig. 271. Inward Flow Turbine. Unit-Power, Unit-Speed Curves.

be obtained for any other type of turbine. Then for any given power P, at a given head H, the unit power

$$p=\frac{P}{H^{\frac{3}{2}}} \quad \text{.....(1)}$$

can be obtained. The efficiency e at this power will also be known.

Let the speed of the turbine at this power P under a head H be N revolutions per minute. Then the unit speed is

$$N_1 = \frac{N}{\sqrt{H}} \quad \ldots\ldots \quad \ldots\ldots \quad \ldots\ldots\ldots\ldots\ldots \quad (2).$$

From equations (1) and (2) let the unit powers and unit speeds be determined for given gate openings, while H is kept constant; and let these unit powers and unit speeds be plotted as in Fig. 271. For example in the case of a reaction turbine, suppose when the head is 20 feet, the gate opening is 0·75 and the speed is 180 revolutions per minute, then the unit speed is

$$N_1 = \frac{180}{\sqrt{20}} = 40{\cdot}3.$$

Let the horse-power of the turbine be 136. Then the unit power is

$$p = \frac{136}{20^{\frac{3}{2}}} = 1{\cdot}52.$$

Let the efficiency e for this condition be 84 per cent.

In Fig. 271 let the point S be plotted so that the vertical ordinate is 1·52 and the abscissa 40·3, then S is a point on a unit-power, unit-speed curve for 0·75 gate opening. Similar points can be plotted for this and for other gate openings and the dotted curves obtained.

The efficiency e at S is 84 per cent., therefore S is on an efficiency contour of 84 per cent. Knowing the efficiencies at all powers and speeds for this given head other points on the 84 per cent. contour can be obtained and the curve CCC sketched in. Similarly other contours can be found.

Let it now be supposed that the machine is required to work under the same head at 200 revolutions per minute. Then the unit speed will be

$$N_1 = 44{\cdot}7.$$

At 0·75 gate the unit-power will be given by the point T, the efficiency will be nearly 86 per cent. and the horse-power about 138. This is the maximum power at maximum efficiency. With the head of 20 feet the maximum unit power at full gate is 1·8, at the point P the maximum power is 160·9, the unit speed is 43·33, the speed is 193 revolutions per minute, and the efficiency is 79 per cent., about.

For the same unit speed and with a head of 25 feet the power at full gate will be

$$1{\cdot}8 \times 25^{\frac{3}{2}} = 225 \text{ H.P.}$$

215 D. Characteristic curves for a Pelton wheel.

Fig. 272A shows five efficiency curves obtained from a Pelton wheel of 20 inches diameter working with a head of 200 feet plotted on a revolutions per minute base and also the horse-power

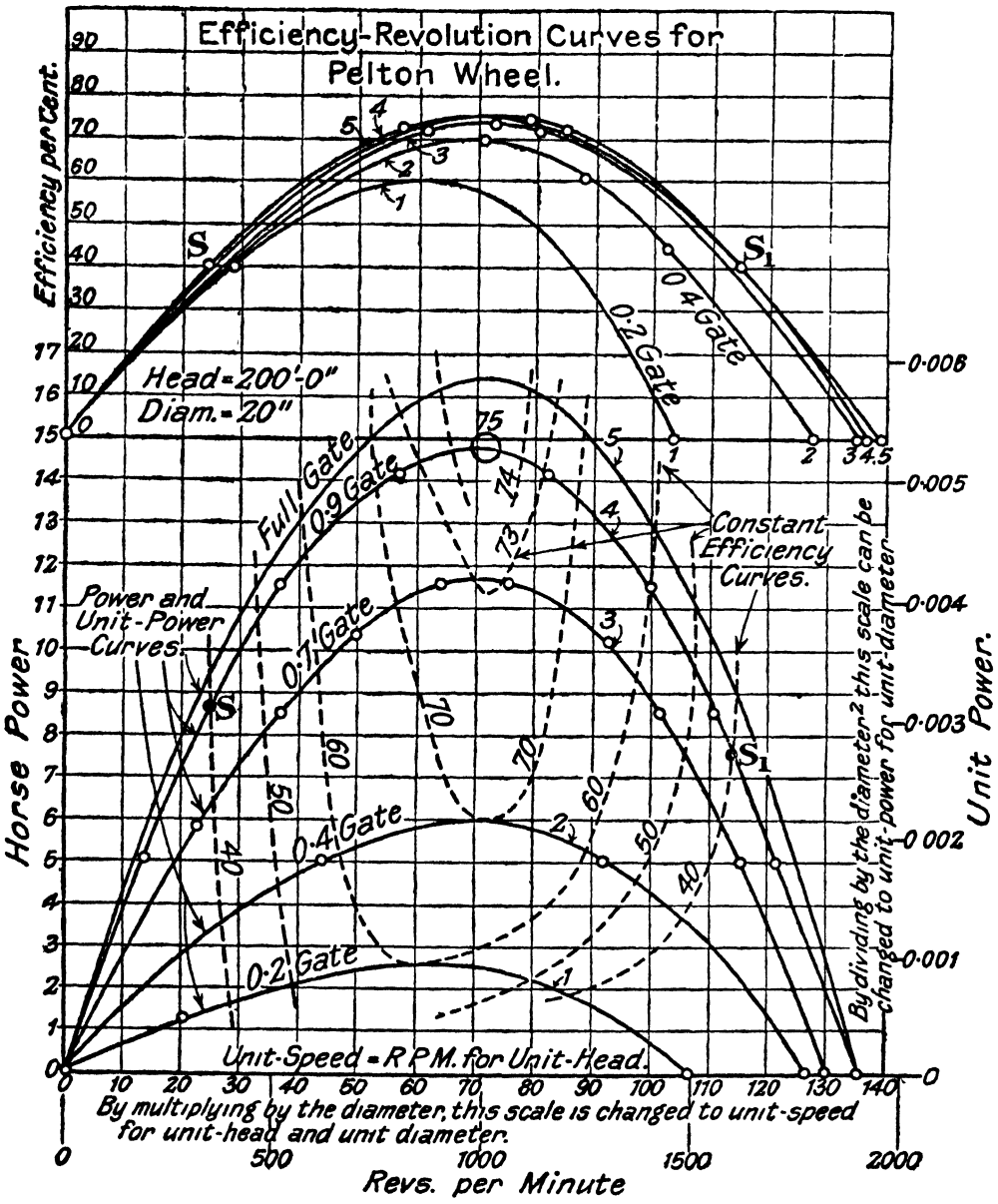

Fig. 272A. Horse-Power. Revolution curves for Pelton Wheels. Quantity for each gate opening, constant.

obtained from the wheel at the various nozzle openings 1 to 5, also plotted on a revolutions per minute base. It will be seen that with gate opening 5 at 1000 revolutions per minute, the wheel has a horse-power of about 16·5, and an efficiency of 74 per cent. The maximum efficiency occurs at 0·90 nozzle opening and is 75 per

cent. The maximum efficiencies at various gate openings are shown plotted in Fig. 272 A. On the right of Fig. 272 A is plotted a scale of unit power, i.e. the horse-power on the left of the diagram is divided by $H^{\frac{3}{2}}$. Below the figure is also shown a second scale of revolutions per unit head; this is obtained from the revolutions per minute by dividing by $200^{\frac{1}{2}}$. Thus Fig. 272 A shows curves of horse-power at various speeds for different nozzle openings, and also curves of unit power plotted against unit speeds for various gate openings and is thus similar to Fig. 271.

The dotted constant efficiency curves are readily obtained from the efficiency curves. For example the points S and S_1, on the efficiency curve for gate opening 4 where the efficiency is 40 per cent. are projected downwards to meet the power curve 4 which using the scale to the right are also unit power curves, at the points S and S_1 giving two points on the contour of 40 per cent. efficiency. The quantities of water used at the respective nozzle openings per second are shown in the table.

	1	2	3	4	5
Nozzle opening (nearly) ...	·20	·4	·70	·90	Full
Quantity of water per sec.	0 186	0·375	0 67	0·875	·97
Unit quantity	0·0132	0·0263	0·0473	0 0618	

The unit quantities obtained by dividing the quantity by $\sqrt{H}$ are also shown in the table. Fig. 272 B is then plotted with unit speeds as abscissae and unit quantities as ordinates. From Fig. 272 A points are obtained from which the efficiency contours on Fig 272 B are plotted. For example, in Fig. 272 A, nozzle opening 4, when the efficiency is 40 per cent., the unit speed is 24, and also 113, thus the points S and S_1 on Fig. 272 B correspond to S and S_1 on Fig. 272 A. Other points are obtained in exactly the same way. On Fig. 272 B the quantities used per second for any nozzle opening are clearly horizontal lines, thus at gate opening 3 when the unit speed is 84, the efficiency is 70 per cent., and the unit quantity is 0·0473.

Suppose now a wheel 12 inches diameter is required to run at unit speed of 70 and under a head of 250 feet. If the unit quantity is ·05 for a wheel of 20 inches diameter when the head is 200 feet and the unit speed 70 the efficiency point R, Fig. 272 B, is 74 per cent.; the corresponding unit quantity for a 1 inch wheel is

$$q = \frac{\cdot 05}{400}$$

and for a 12 inch wheel

$$= \frac{\cdot 05 \times 144}{400} = \cdot 0180;$$

the unit quantity for a 12 inch wheel under a head of 250 feet

$$= \frac{\cdot 0180\sqrt{250}}{\sqrt{200}} = \cdot 0201 \text{ cubic foot second.}$$

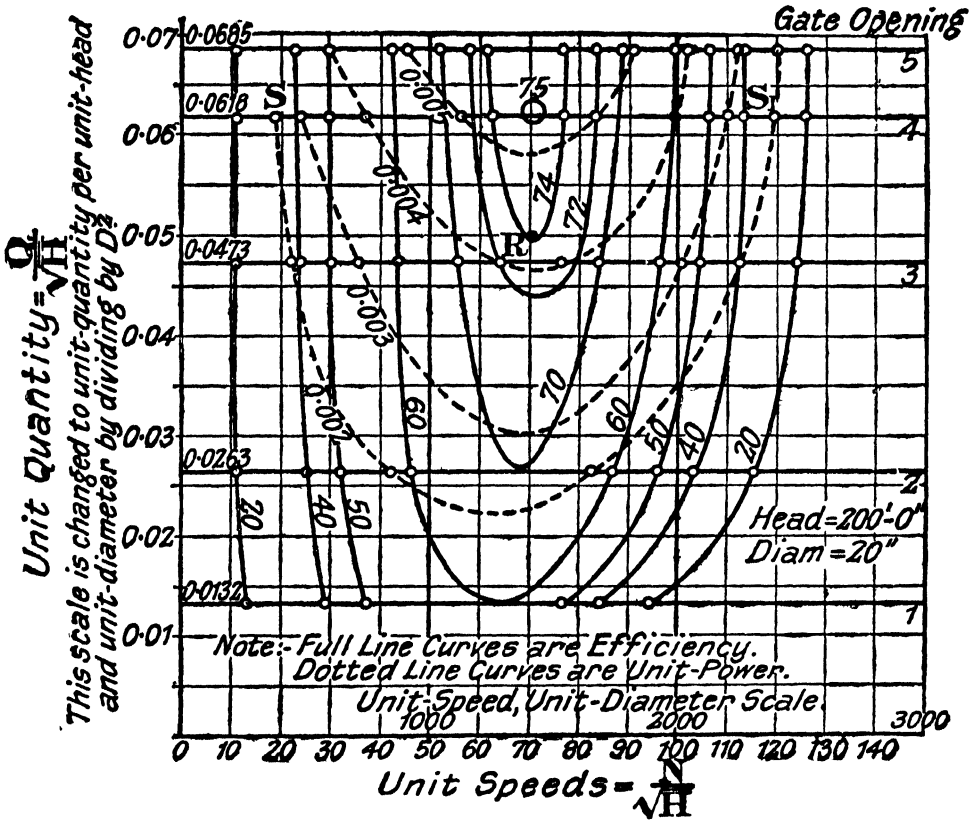

Fig. 272B. Efficiency and Unit Power Curves for Pelton Wheel with Unit Quantity and Unit Speed as Ordinates

The power for a 20 inch wheel under a head of 1 foot will be, from Fig. 272A, about ·0042. The power of a 1 inch wheel under 1 foot head will be

$$p = \frac{\cdot 0042}{20^2},$$

and the power of a 12 inch wheel under a head of 250 feet will be

$$p = \frac{\cdot 0042}{20^2} \times 250^{\frac{3}{2}} \times 12^2 = 5\cdot 95 \text{ H.P.}$$

The number of revolutions per minute will be

$$N = \frac{70 \times 20}{12}\sqrt{250} = 1830$$

and the efficiency will be 74 per cent. about.

The maximum efficiency would be obtained when the quantity for the 12 inch wheel is

$$\frac{\cdot 0618 \times 144}{400} \times \frac{\sqrt{250}}{\sqrt{200}} = \cdot 0248 \text{ cu. ft. per sec.}$$

The power would then be

$$\frac{\cdot 0051}{20^2} \times 250^{\frac{3}{2}} \times 12^2 = 7\cdot 2 \text{ H.P.}$$

215 E. Unit-head and unit-diameter curves.

From equations (7), (9) and (11), page 389, the unit power, the unit quantity and the unit speed per unit diameter can be obtained. If then such curves as Fig. 272 A are obtained for any diameter turbine the unit power scale on the right can be changed by dividing by the square of the diameter and the unit speed scale by multiplying by the diameter. Then Fig. 272 A can be made a unit-power, unit-speed curve, for 1 foot head and 1 unit diameter. These scales are not drawn but the student will have no difficulty in adding them to the figure.

215 F. The Herschel fall increaser.

This is an arrangement suggested by Herschel for increasing the head under which a turbine works when the fall is small, and thus making it possible to run the wheel at a higher velocity, or for keeping the head under which a turbine works constant when the difference of level between the head and tail water of a low fall varies. In times of heavy flow the difference of level between the head and tail water of a stream supplying a turbine may be considerably less than in times of normal flow, as shown in the examples quoted on pages 328 and 349, and if the power given by the turbine is then to be as great as when the flow is normal, additional compartments have to be provided so that a larger volume is used by the turbine to compensate for the loss of head. Instead of additional compartments, as in the examples cited, stand by plant of other types is sometimes provided. In all such arrangements expensive plant is useless in times of normal flow, and the capital expenditure is, therefore, high.

The increased head is obtained by an application of the Venturi principle, the excess water not required by the turbines being utilised to create in a vessel a partial vacuum, into which the exhaust can take place instead of directly into the tail-race.

In Fig. 273, which is quite diagrammatic, suppose the turbine is working in a casing as shown and is discharging down a tube into the vessel V; and let the water escape from V along the pipe EDF, entering the pipe by the small holes shown in the figure.

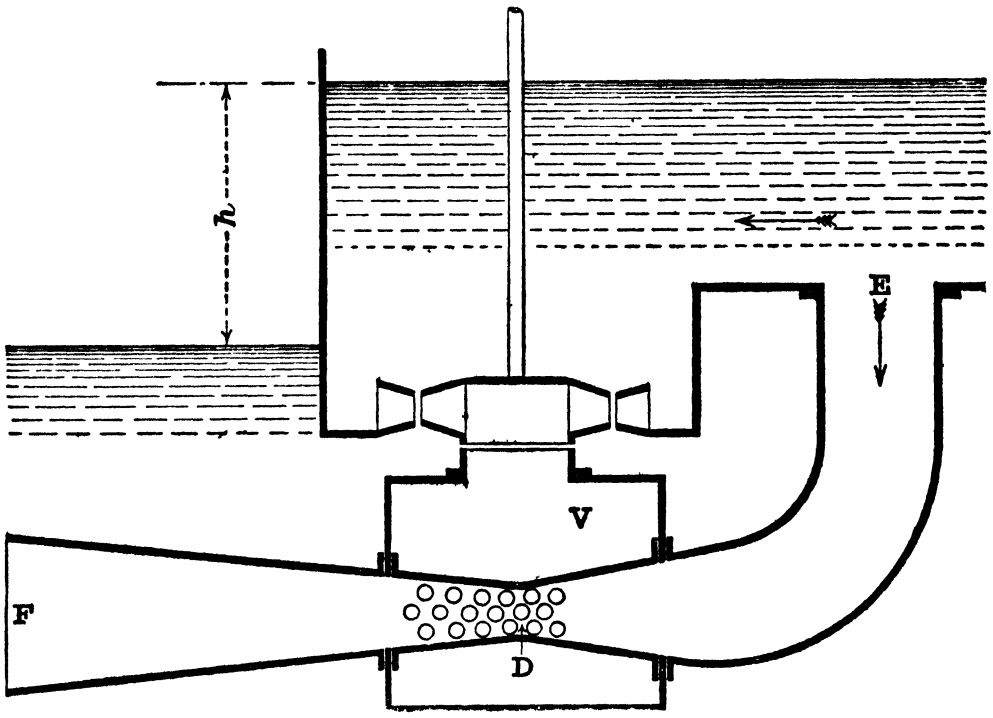

Fig. 273 Diagram of Fall Increaser.

When there is a plentiful supply of water, some of it is allowed to flow along the pipe EDF, entering at E where it is controlled by a valve. The pipe is diminished in area at D, like a Venturi meter, and is expanded as it enters the tail-race. When flow is taking place the pressure at D will be less than the pressure at F, and the head under which the turbine is working is thereby increased. Mr Herschel states that by suitably proportioning the area of the throat D of the pipe, and the area of the admission holes in D, the head can easily be increased by 50 per cent. Let h be the difference of level of the up and down streams. Then without the fall increaser the discharge of the turbine is proportional to $\sqrt{h}$ and the horse-power to $h\sqrt{h}$.

Let h_1 be the amount by which the head at D is less than at F, or is the increase of head by the increaser.

The work done without the increaser is to the work done with the increaser

$$= \frac{h\sqrt{h}}{(h+h_1)\sqrt{h+h_1}}.$$

If Q_1 is the discharge through the turbine when the increaser is used, the work gained by the increaser

$$= Q_1 (h + h_1) - Qh$$

$$= Q_1 (h + h_1) - \frac{Q_1 h \sqrt{h}}{\sqrt{h + h_1}}.$$

The efficiency of the increaser is this quantity divided by $h \times$ weight of water entering at E.

Mr Herschel found by experiment that the maximum value of this efficiency was about 30 per cent.

The arrangement was suggested by Mr Herschel, and accepted, in connection with a new power house to be erected for the further utilisation of the water of Lake Leman at Geneva; one of the conditions which had to be fulfilled in the designs being that at all heads the horse-power of the turbines should be the same. When the difference between the head and tail water is normal the increaser need not be used, but in times of heavy flow when the head water surface has to be kept low to give sufficient slope to get the water away from up stream and the tail water surface is high, then the increaser can be used to make the head under which the turbine works equal to the normal head.

215G. Hammer blow in a long turbine supply pipe.

Let L be the length of the pipe and d its diameter.

The weight of water in the pipe is

$$W = wL \frac{\pi}{4} . d^2.$$

Let the velocity change by an amount ∂v in time ∂t. Then the rate of change of momentum is $\frac{W \partial v}{g \partial t}$, and on a cross section of the lower end of the column of water in the pipe a force P must be applied equal to this.

Therefore $$P = \frac{\pi}{4} \frac{wLd^2}{g} \frac{\partial v}{\partial t}.$$

Referring to Fig. 266, let b be the depth of the orifice and d_1 its width.

Then, if r is the distance of D from the centre about which the beak turns, and r_1 is the distance of the closing edge of the beak from this centre, and if at any moment the velocity of the piston is v_0 feet per second, the velocity of closing of the beak will be

$$\frac{v_0 r_1}{r}.$$

In any small element of time ∂t the amount by which the nozzle will close is

$$\partial b = \frac{v_0 r_1}{r} \partial t.$$

Let it be assumed that U, the velocity of flow through the nozzle, remains constant. It will actually vary, due to the resistances varying with the velocity, but unless the pipe is very long the error is not great in neglecting the variation. If then v is the velocity in the pipe at the commencement of this element of time and $v - \partial v$ at the end of it, and A the area of the pipe,

$$v \,.\, \mathrm{A} = b \,.\, d_1 \,.\, \mathrm{U} \quad \ldots\ldots\ldots\ldots\ldots \quad (1)$$

and

$$(v - \partial v)\,\mathrm{A} = \left(b - \frac{v_0 r_1}{r} \partial t\right) . \, d_1 \,.\, \mathrm{U} \quad \ldots\ldots\ldots\ldots\ldots (2).$$

Subtracting (2) from (1),

$$\partial v \,.\, \mathrm{A} = \frac{v_0 r_1}{r} d_1 \mathrm{U} \partial t,$$

or

$$\frac{\partial v}{\partial t} = \frac{v_0 r_1}{r} \frac{d_1 \mathrm{U}}{\mathrm{A}} \quad \ldots\ldots\ldots\ldots\ldots\ldots\ldots\ldots (3).$$

If W is the weight of water in the pipe, the force P in pounds that will have to be applied to change the velocity of this water by ∂v in time ∂t is

$$\mathrm{P} = \frac{\mathrm{W}}{g} \frac{\partial v}{\partial t}.$$

Therefore

$$\mathrm{P} = \frac{\mathrm{W}}{g} \frac{r_1}{r} \frac{d_1 \mathrm{U} v_0}{\mathrm{A}},$$

and the pressure per sq. inch produced in the pipe near the nozzle is

$$p = \frac{\mathrm{W}}{g} \frac{r_1}{r} \frac{d_1 \mathrm{U} v_0}{\mathrm{A}^2}.$$

Suppose the nozzle to be completely closed in a time t seconds, and during the closing the piston P moves with simple harmonic motion.

Then the distance moved by the piston to close the nozzle is

$$\frac{br}{r_1},$$

and the time taken to move this distance is t seconds.

The maximum velocity of the piston is then

$$v_m = \frac{\pi b r}{2 t r_1},$$

and substituting in (3), the maximum value of $\frac{\partial v}{\partial t}$ is, therefore,

$$\frac{\partial v}{\partial t} = \frac{\pi b r r_1 d_1 U}{2 t r_1 r A},$$

and the maximum pressure per square inch is

$$p_m = \frac{\pi W b \,.\, d_1 \,.\, U}{2 g t A^2} = \frac{\pi \,.\, W \,.\, Q}{2g \,.\, t \,.\, A^2} = \frac{\pi}{2t} \cdot \frac{W v}{g A},$$

where Q is the flow in cubic feet per second before the orifice began to close, and v is the velocity in the pipe.

Example A 500 horse-power Pelton wheel of 75 per cent efficiency, and working under a head of 260 feet, is supplied with water by a pipe 1000 feet long and 2′ 3″ diameter. The load is suddenly taken off, and the time taken by the regulator to close the nozzle completely is 5 seconds.

On the assumption that the nozzle is completely closed (1) at a uniform rate, and (2) with simple harmonic motion, and that no relief valve is provided, determine the pressure produced at the nozzle.

The quantity of water delivered to the wheel per second when working at full power is

$$Q = \frac{500 \times 33{,}000}{260 \times 62\cdot4 \times \cdot75 \times 60} = 21\cdot7 \text{ cubic feet.}$$

The weight of water in the pipe is

$$W = 62\cdot4 \times \frac{\pi}{4} (2\cdot25)^2 \times 1000$$

$$= 250{,}000 \text{ lbs.}$$

The velocity is $\frac{21\cdot7}{3\cdot96} = 5\cdot25$ ft. per sec.

In case (1) the total pressure acting on the lower end of the column of water in the pipe is

$$P = \frac{250{,}000 \times 5\cdot25}{g \times 5}$$

$$= 8200 \text{ lbs.}$$

The pressure per sq inch is

$$p = \frac{8200}{\frac{\pi}{4} \,.\, 27^2} = 14\cdot5 \text{ lbs. per sq inch.}$$

In case (2) $$p_m = \frac{\pi}{2} \frac{W}{t \,.\, g} \frac{v}{A} = 22\cdot8 \text{ lbs. per sq. inch.}$$

215 H. The surge tank.

In order to meet the variable demands that a turbine may make upon the supply, it is essential, particularly in those cases where the supply reservoir is at a considerable distance from the turbine, to arrange for a subsidiary reservoir or tank to be placed near to the machines. Such a tank is generally called a "surge tank," because, as will be seen, when the supply to the machines is cut off or changed by the action of the governor, surging takes place in

this tank. The best arrangement for the surge tank in any given case is not easily determined. Figs. 274A and 274B show two typical examples. In Fig. 274A the horizontal cross section of the tank is varied, and in Fig. 274B the cross section of BDEF is constant. An alternative arrangement is the dotted tank KGHL. The surge tank should be placed as near to the machines as possible, and if it is to be open to the atmosphere the top of it must not be

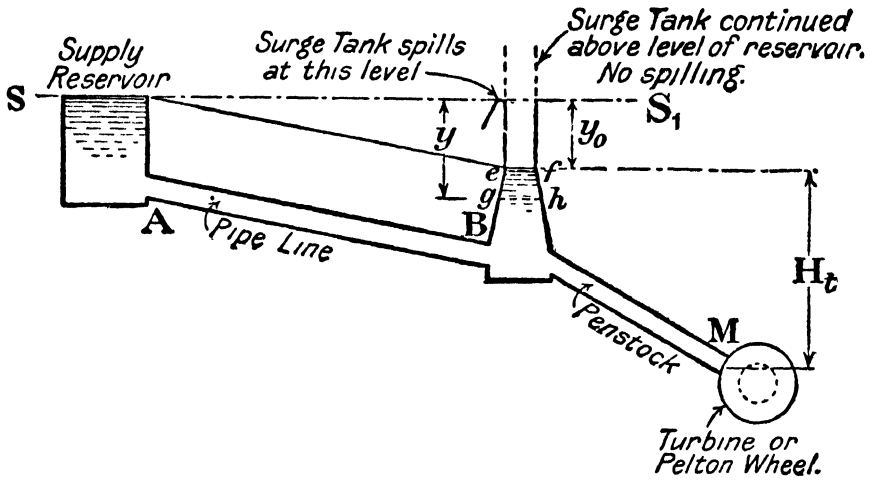

Fig. 274A. Surge tank of Variable Sectional Area.

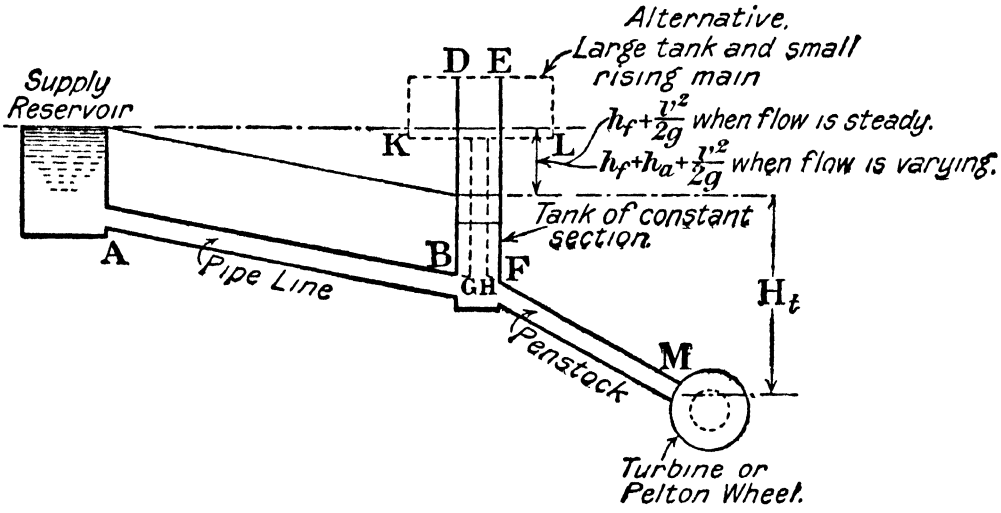

Fig. 274B. Surge tank of Constant Sectional Area.

lower than the level of the water in the reservoir. The tank of Fig. 274A has a spill way on the same level as the water in the reservoir. In this case, the water in the tank can only surge to a level a little higher than the sill of the spill way. As indicated by the dotted line the surge tank could be taken to any height above the level of the water in the reservoir, in which case surging can take place to a level higher than the level of the reservoir.

Let it be supposed that a pipe line AB is of considerable length l; the supply to the turbine is taken down a penstock which should be short if possible as compared with the pipe. The fall on AB will generally be small compared with the fall on the penstock. The machine M may be a turbine of any type, such as a Pelton Wheel or reaction turbine. At any given instant, let it be supposed that the turbines are taking a quantity of, say, 500 cu. ft. per second from the pipe line AB, which has a sectional area of 300 sq. ft. Let it be supposed that the demand in one minute is changed from 500 cu. ft. per second to, say, 1200 cu. ft. per second. To meet this demand, if there were no surge tank, it would be necessary to accelerate the water in the pipe by an acceleration

$$a = 0{\cdot}039 \text{ ft. per sec. per sec.}$$

To accelerate the water in the pipe length AB by a ft. per second per second requires a head

$$h_a = \frac{al}{g}.$$

Suppose the pipe to have a length of 20,000 ft., then the head

$$h_a = 24{\cdot}4 \text{ ft.}$$

Neglecting, for the moment, the increase of the velocity head and the friction head due to the increase in the velocity pipe, it is clear that in order to obtain this acceleration, the pressure head at the point b in the pipe must fall by 24·4 ft.; this clearly cannot take place suddenly. If a surge tank is placed at B with reasonably large sectional area, the demand made by the machines may be for some period of time partly met by the flow from the surge tank, and partly from the flow along the pipe line. If, on the other hand, the governors diminish the supply to the machines, head will be required to give the negative acceleration to the water in the pipe line, and the excess water flowing along the pipe not taken by the machines will cause the head in the surge tank to rise.

At any instant, let it be supposed that the condition of flow is steady, and that the level of the water in the surge tank is ef at a distance

$$y_0 = h_f + \frac{v^2}{2g}$$

below the surface of the water in the reservoir. The difference of level between the water of the reservoir and in the surge tank is clearly equal to the friction head h_f plus the velocity head of water in the pipe. Let at this instant the pressure head at M be $\frac{p}{w}$ and

the velocity head $\frac{U^2}{2g}$. If the machine is an impulse machine p is the atmospheric pressure and U is the velocity from the nozzle. If the machine is a reaction machine, the pressure p may be greater than the atmospheric pressure and U will be the velocity of flow from the guide blades.

Then $$\frac{p_a}{w} + H_t = \frac{p}{w} + \frac{U^2}{2g} + h_{f_1} \quad \text{.....(1)},$$

where h_{f_1} is the loss of head in the penstock.

Let it now be assumed that the flow into the machine is changed and that the surface of the water in the surge tank is at a level gh at a distance y below the level of the water in the reservoir.

Let the velocity in the pipe line be v, the loss of head by friction at this velocity be h_f, and let the head necessary to accelerate the water along the pipe AB be h_a, then

$$y = h_a + h_f + \frac{v^2}{2g} \quad \text{..... ....(2)}.$$

At the same instant let the head necessary to accelerate the water in the penstock be h_{a_1}, the friction head be h_{f_1}, and p_1 and U_1 the pressure and velocity respectively at M. Then

$$\frac{p_a}{w} + H_{t_1} = \frac{p_1}{w} + \frac{U_1^2}{2g} + h_{f_1} + h_{a_1} \quad \text{..... .. ..(3)}.$$

In equation (2), h_f and $\frac{v^2}{2g}$ will always be positive; h_a may be either positive or negative; it will be positive when the velocity in the pipe line AB is increasing.

At a given instant when the level of the water in the surge tank is gh, let:

Q_M be the quantity of water per second flowing into the machines; this will be $\gtreqless 0$,

Q_s be the quantity of water per second flowing out of or into the surge tank. Q_s will be positive when the flow is from the surge tank,

Q be the quantity of water per second flowing along the pipe AB.

Then $$Q_M = Q + Q_s \quad \text{.....(4)}.$$

In any small quantity of time ∂t, the quantity flowing from the surge tank is equal to the cross sectional area of the tank at

level y multiplied by the small change in level ∂y of the water in the tank.

$$A_s \partial y = Q_s \partial t = (Q_M - Q)\,\partial t = (Q_M - Av)\,\partial t \quad \ldots\ldots\ldots (5)^*,$$

A being the sectional area of the pipe and A_s the cross sectional area of the surge tank at any level y.

The change in the quantity of flow along the pipe in a small element of time ∂t is

$$\partial Q = a \,.\, A \,.\, \partial t,$$

where a is the mean acceleration in the pipe during the small element of time and A the area of the pipe, or in the limit

$$dQ = \frac{h_a g}{l}\, dt A$$

$$= \frac{g}{l} A \left(y - h_f + \frac{v^2}{2g}\right) dt \quad \ldots\ldots\ldots\ldots\ldots\ldots (6).$$

The velocity head will generally be small and may be neglected; then from (2)

$$\partial y = \partial h_a + \partial h_f \quad \ldots \ldots \quad \ldots\ldots \quad (6a).$$

* From (2), in which the friction head $h_f = \frac{lv^2}{C^2 m}$, and, assuming C constant,

$$h_f + \frac{v^2}{2g} = Kv^2, \text{ and } y = h_a + Kv^2 = \frac{l\,dv}{g\,dt} + Kv^2.$$

Then
$$\frac{dy}{dt} = \frac{l d^2 v}{g dt^2} + 2Kv\frac{dv}{dt}.$$

Substituting from (5),

$$\frac{Q_M - Av}{A_s} = \frac{l}{g}\frac{d^2 v}{dt^2} + \frac{2Kv dv}{dt}.$$

When the supply to the machine is suddenly cut off Q_M is zero, and this equation becomes

$$\frac{d^2 v}{dt^2} + \frac{2Kg}{l}\frac{v dv}{dt} + \frac{g}{l}\frac{Av}{A_s} = 0.$$

If A_s is constant, the equation becomes

$$\frac{d^2 v}{dt^2} + \frac{av dv}{dt} + bv = 0,$$

the first solution to which is

$$\frac{1}{a}\frac{dv}{dt} + \frac{b}{a^2}\log\left(a\frac{dv}{dt} - b\right) = \frac{v^2}{2} + C.$$

This is not of much use in practical cases. If as a first approximation the friction head is assumed to vary as the velocity, the equation then becomes

$$\frac{d^2 v}{dt^2} + K_1\frac{g}{l}\frac{dv}{dt} + \frac{g}{l}\frac{Av}{A_s} = 0$$

which, when A_s is constant, is of a standard form and can be integrated.

The three equations (5), (6) and (6*a*) may be said to be the three differential equations that determine the motion. They, however, can only be integrated by making certain assumptions and it is generally very much better to solve given cases by a process of approximation.

Approximate method of solving the surge tank problem. At any given instant when the level in the tank is y feet below SS_1, Fig. 274A, let a be the acceleration in the pipe and h_a the acceleration head; at the end of a time ∂t seconds let the acceleration be a_1 and the acceleration head h_{a_1}. Then

$$a_1 - a = \partial a.$$

Then on the assumption that the acceleration changes uniformly the average acceleration is

$$\frac{a + a_1}{2} = a + \frac{\partial a}{2} = \left(h_a + \frac{\partial h_a}{2}\right)\frac{g}{l}.$$

Then from (6),

$$\partial Q = A\left(h_a + \frac{\partial h_a}{2}\right)\frac{g}{l}\partial t \quad \text{.....} \quad (7).$$

Let h_f be the friction head at the beginning of the time ∂t and h_{f_1} the friction head at the end of the time ∂t. Then the average friction head is

$$\frac{h_f + h_{f_1}}{2} = h_f + \frac{\partial h_f}{2} \quad \text{.....} \quad (8),$$

in which $h_f = \frac{lv^2}{C^2 m}$, where m is the hydraulic mean depth of the supply pipe.

Let Q_M be the rate of flow to the turbines at the commencement of the time ∂t and Q_{M_1} the rate of flow at the end of the time ∂t. Then $\partial Q_M = Q_{M_1} - Q_M$.

In time ∂t the average rate of flow is $Q_M + \frac{\partial Q_M}{2}$ and the quantity of flow to the machines is

$$q_t = \left(Q_M + \frac{\partial Q_M}{2}\right)\partial t \quad \text{.....} \quad (9).$$

Similarly the quantity that has flowed from the surge tank in time ∂t is $\left(Q_s + \frac{\partial Q_s}{2}\right)\partial t$ and the quantity that has flowed along the pipe is $\left(Q + \frac{\partial Q}{2}\right)\partial t$. As finite times of a few seconds will generally be taken it is convenient to write t for ∂t, then

$$\left(Q_s + \frac{\partial Q_s}{2}\right)t = \left(Q_M + \frac{\partial Q_M}{2}\right)t - \left(Q + \frac{\partial Q}{2}\right)t$$

or $$A_s \partial y = \left(Q_M + \frac{\partial Q_M}{2}\right) t - \left(Q + \frac{\partial Q}{2}\right) t \quad \text{.....(10)},$$

or, substituting from (9),

$$q_t = Qt + \frac{\partial Q}{2} t + A_s \partial y.$$

Substituting from (7) for ∂Q, and from (6*a*) for $\partial y = \partial h_a + \partial h_f$,

$$q_t = Qt + \frac{Ah_a}{2} \frac{g}{l} t^2 + \frac{A \partial h_a}{4} \frac{g}{l} t^2 + A_s \partial h_a + A_s \partial h_f \quad \text{.....(11)},$$

or $$\partial h_a = \frac{q_t - Q \,.\, t \,. - \frac{Ah_a}{2} \frac{g}{l} t^2 - A_s \partial h_f}{A_s + \frac{Aqt^2}{4l}} \quad \text{.....(12)}.$$

216. Arithmetical solution of the surge tank problem.

It is now necessary to proceed arithmetically in any given case.

For example let us suppose that at a given instant the turbines are working steadily and receiving 500 cubic feet of water per second from the supply pipe. Let the area of this pipe be 300 square feet, its length 20,000 feet, and the hydraulic mean depth 4·4 feet. As a first approximation let C be assumed 100. Then since the acceleration is zero and neglecting the velocity head

$$y = h_f = \frac{20000}{10000} \cdot \frac{v^2}{m} = \frac{v^2}{2{\cdot}2}$$
$$= 1{\cdot}26 \text{ feet},$$

compared with which $\frac{v^2}{2g}$ is negligible.

Let it be supposed for simplicity that the load on the turbines is so increased that the supply of water increases at the rate of 100 cubic feet in ten seconds. Let t be ten seconds.

Then during the first ten seconds $q_t = (500 + \frac{100}{2})\, t$
$= 5500$ cubic feet.

Since h_f is small ∂h_f can in the first ten seconds be taken as zero.

Therefore, from (12), since h_a is zero,

$$\partial h_a = \frac{5500 - 5000}{A_s + 12}.$$

Let the mean value of A_s for the first ten seconds be assumed as 238. That is, the area at level y from the free surface will be nearly this value.

Then $$\partial h_a = \tfrac{500}{250} = 2 \text{ ft.}$$

$$\partial Q = \frac{300 \times 32 \times 10}{20000}\left(\frac{\partial h_a}{2}\right) = 4{\cdot}8 \times 1 = 4{\cdot}8 \text{ cu. ft.}$$

The quantity of flow along the pipe in 10 seconds is

$$q_P = (500 + 2{\cdot}4)\ 10 = 5024.$$

The quantity that has left the surge tank is

$$5500 - 5024 = 476 \text{ cu. ft.}$$

Therefore $$\tfrac{476}{2} = 238,$$

which equals the assumed mean area.

Second period of 10 seconds.

$$h_a = 2 \text{ ft.},\ \partial h_f = 0{\cdot}1 \text{ say.}$$

$$Q = 504{\cdot}8 \text{ cu. ft. per sec.}$$

$$q_t = 6500 \text{ cu. ft.}$$

Let $$A_{sm} = 250 \text{ sq. ft.},$$

therefore $$\partial h_a = \frac{6500 - 5048 - 24 \times 2 - {\cdot}1 \times 250}{250 + 12}$$

$$= 5{\cdot}3 \text{ ft.}$$

$$\partial Q = 4{\cdot}8\left(h_a + \frac{\partial h_a}{2}\right) = 4{\cdot}8 \times 4{\cdot}65$$

$$= 22{\cdot}4 \text{ cu. ft.}$$

$$q_P = 5160.$$

The quantity that has left the surge tank is

$$6500 - 5160 = 1340 \text{ cu. ft.}$$

Therefore $$A_{sm} = \frac{1340}{5{\cdot}3}$$

$$= 253,$$

which is again nearly correct. It should be noticed that ∂h_f has been assumed 0·1. In the next calculation h_f at the beginning is

$$h_f = \frac{(527{\cdot}4)^2}{300^2 \times 2{\cdot}2} = 1{\cdot}4 \text{ feet.}$$

∂h_f will, therefore, be of the order 0·16 to 0·18.

By guessing again an area and proceeding in the same way the levels of the water in the surge tank can be worked out. The water will surge for some time and assuming the flow of 1200 cubic feet to remain constant for some time the level in the surge tank will settle down nearly to a level, below the reservoir level,

$$y = \left(\tfrac{1200}{300}\right)^2 \frac{1}{2{\cdot}2} \text{ feet}$$

$$= 7{\cdot}3 \text{ feet.}$$

Before this stage is reached the surging will follow approximately the curves shown in Fig. 275A.

When the water in the tank reaches the level of the water in the reservoir it is assumed to spill, so that during the interval 130 secs. to 190 secs. the level of the water in the tank remains constant and $\partial h_a = \partial h_f$. At 130 secs. it begins to fall and then surges as shown in Fig. 275A.

In Fig. 275B are shown plotted the friction head and acceleration head at various times, and in Fig. 275A in addition to the levels of the water in the surge tank, the velocities along the pipe line.

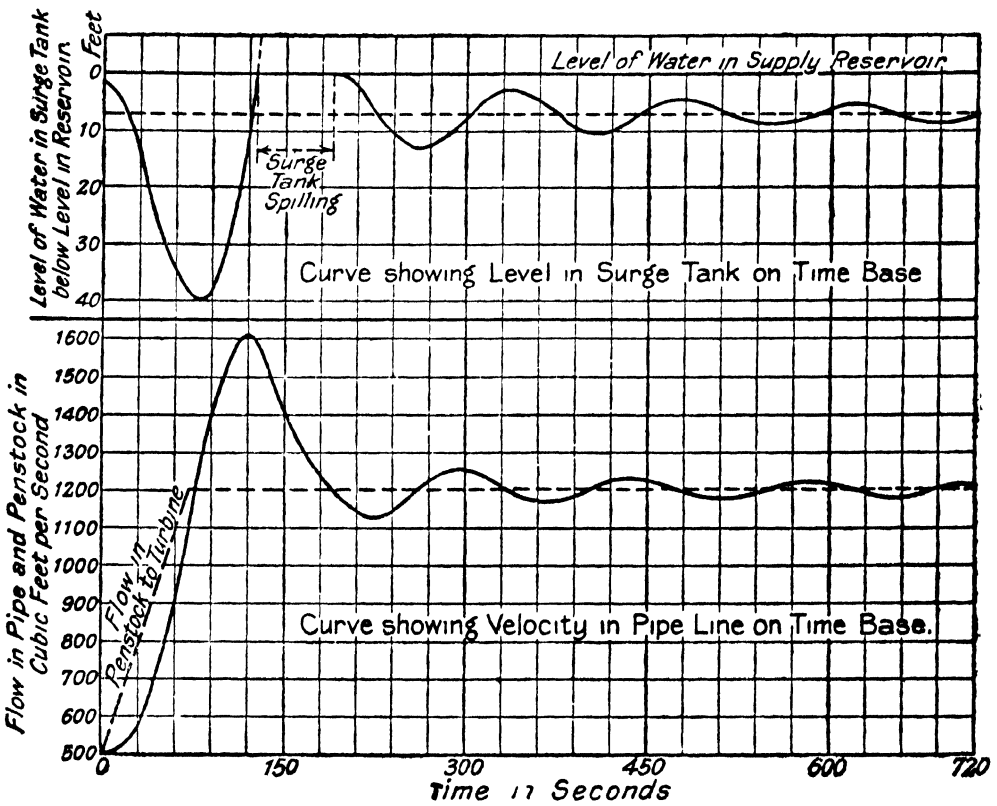

Fig. 275A.

The assumption made that the quantity of flow into the machine increases uniformly can only approximately be fulfilled, as clearly from equation (1) the velocity into the turbine will vary with the level of the water in the surge tank and it would be necessary therefore for the governor action to adjust the opening and closing of the nozzle or the guide blades to follow the change of level, in a manner practically impossible. A nearer approximation to the flow in the pipe line can however be determined by assuming the action of the governor and the gate opening at each instant of the motion

to be known. With the Pelton wheel the velocity U can be calculated with reasonable precision when the nozzle position and the head H_t are known. For each level of the water in the tank the velocity along the pipe line can be estimated from equation (1) and the calculations accordingly modified. This is in most cases hardly necessary as in designing a surge tank it is clear that there are other uncertainties and the assumption of uniform variation of flow in the penstock is sufficiently accurate.

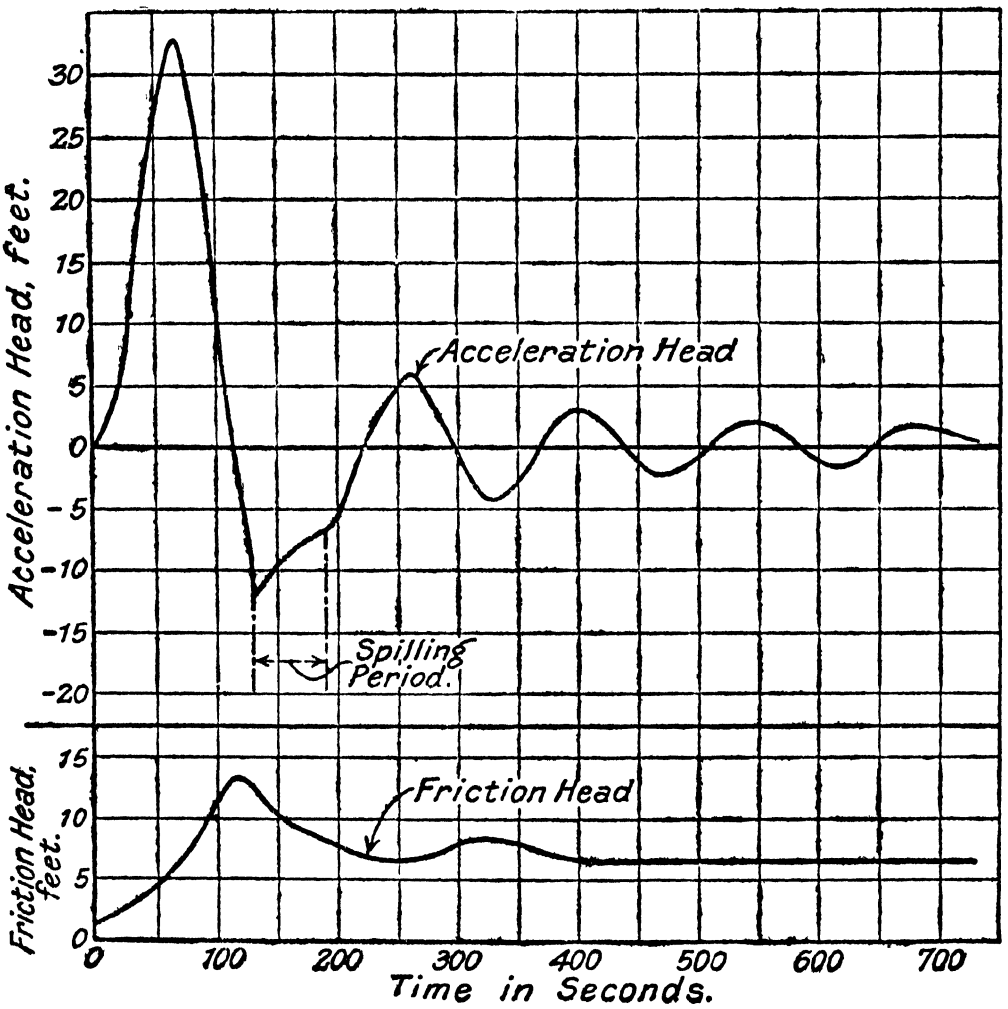

Fig. 275 B. Surge Tank of Variable Sectional Area.

The time taken for the machine to change the flow from 500 to 1200 cu. ft. per sec. has been assumed to be 70 secs. The time taken for the flow in the pipe AB to increase from 500 to 1200 cu. ft. per sec. is 87 secs., after which the velocity and the level in the surge tank fluctuate as shown in Fig. 275 A.

By making the surge tank to have a much larger area than assumed in the example the acceleration head changes much less rapidly as will be seen by comparing Fig. 276 B with Fig. 275 B.

The time for the flow in the pipe to become equal to the steady final demand is however increased, as will be seen by comparing Figs. 275A and 276A, being in this case 165 secs. as compared with 87 secs. in the smaller tank.

When the surge tank does not spill as in Fig. 276A the acceleration curve, the flow of water in the pipe curve and the level in the tank curve become continuous curves, consisting of a series of

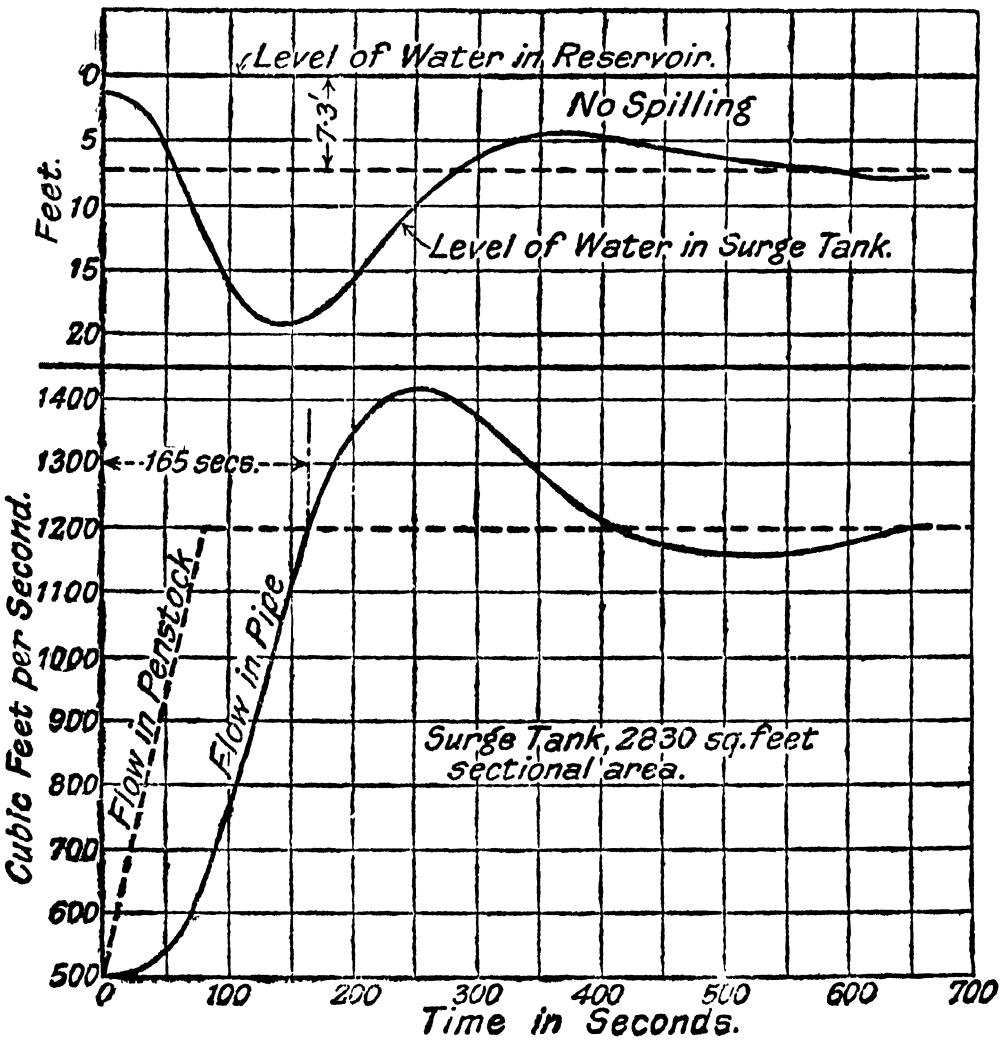

Fig. 276A. Surge Tank of Constant Area.

loops, of diminishing amplitude. Spilling clearly, with the small tank, Fig. 275B, more quickly diminishes the amplitude of the acceleration head curves than if spilling were not allowed.

When load is thrown off, instead of the load increasing, the level in the surge tank first rises to the spill way level and after a time begins to fall and oscillates as in the previous case. If it is desired to economise water and not spill the surge tank, in such a case

as Fig. 274A, must be taken higher than the reservoir water level.

The student, using equations (1) to (12), should calculate the variations in level of a surge tank having a constant sectional area and check the assumptions made by calculating the difference of flow along the penstock and the pipe and comparing it with the flow into or out of the surge tank in any element of time.

The assumptions that are made as to the rate at which the load may change are of fundamental importance. The case may occur when the whole load is suddenly thrown off and this assumption together with the opposite assumption that the load comes on suddenly is sometimes made. In the case when Q_M suddenly becomes zero q_t in (12) is zero.

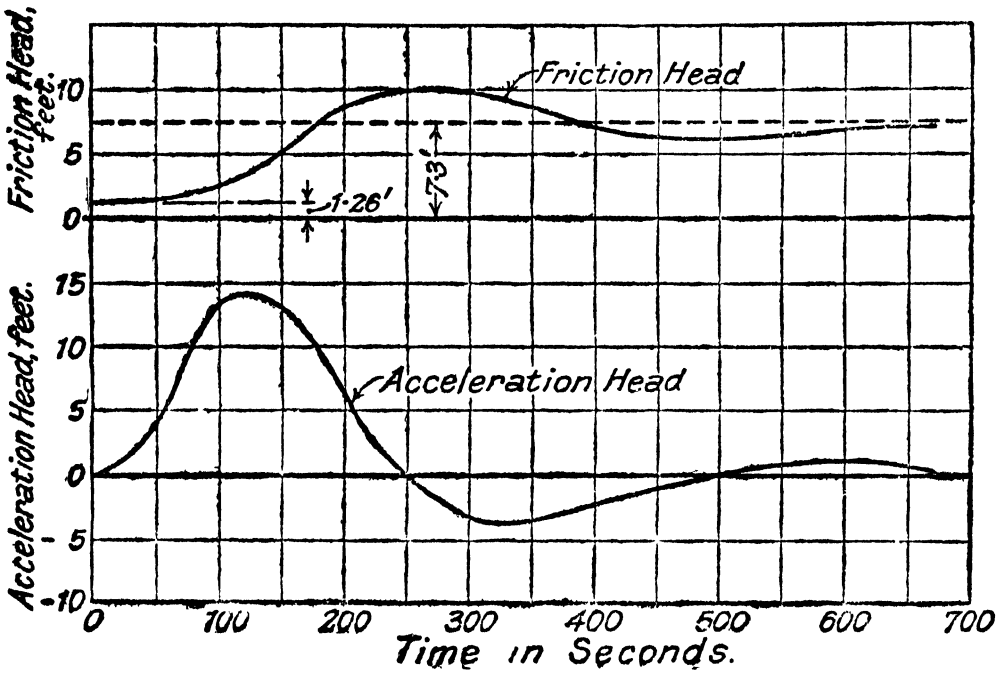

Fig. 276B. Surge Tank of Constant Area.

Closed Surge Tanks. In certain cases it may be necessary to use "air vessel surge tanks." For example if the penstock in a high head turbine has to be long or in cases where an open surge tank is not practicable it may be desirable to instal a subsidiary closed tank on the penstock partly filled with air or a single closed tank for the system. If the air pressure is known for a given level of the water in the closed tank it can be found for any other level and the pressure head at the point of attachment of the closed tank to the pipe system is then known. The equations given for the open surge tank problem can then be easily modified to fit this case.

Special forms of surge tanks. Space forbids a description of special forms of tanks but to those specially interested the following references may be useful:

Trans. Am. S. C. E. 1908, 1915, 1918, 1919–20.
Proc. „ „ 1921.
Mead, *Water Power Engineering.*
Gibson, *Hydro-Electric Engineering,* Vol. I.

216A. The governing of turbines.

When there is no surge tank on a pipe line, as for example a steel pipe line supplying water to a Pelton wheel as in Fig. 266, and a change of load takes place so that in a time t_0 seconds the quantity supplied to the machine changes from Q_1 to Q_2 cubic feet per second, the energy entering in the wheel during the given time can be calculated.

Let v_1 be the velocity of flow at the beginning of the time t_0 seconds and v_2 the velocity at the end of the time. Let it be supposed that the level in the supply tank or forebay remains constant. At the beginning of the time the friction head is

$$h_f = \frac{lv_1^2}{C^2 m} = Kv_1^2.$$

Assuming C to remain constant the friction head at the time t_0 is Kv_2^2.

If it be assumed that the velocity varies uniformly from v_1 to v_2, the acceleration of the water in the pipe $a = \frac{v_2 - v_1}{t_0}$.

The effective head at the turbine at the beginning of the period is

$$H_e = H - Kv_1^2 - \frac{v_1^2}{2g}.$$

At the end of the period it is

$$H - Kv_2^2 - \frac{v_2^2}{2g}.$$

At any time t after the acceleration begins the velocity in the pipe is v and the effective head at the inlet to the turbine is

$$H_e = H - Kv^2 - \frac{al}{g} - \frac{v^2}{2g}.$$

Or the energy entering the wheel per pound of flow is

$$H - Kv^2 - \frac{al}{g}.$$

If A is the sectional area of the pipe line, the energy entering the wheel in time ∂t is $e = 62{\cdot}4A \,.\, v\left(H - Kv^2 - \frac{al}{g}\right)\partial t$, or substituting for v its value $v = v_1 + at$

$$e = 62{\cdot}4A\,(v_1 + at)\left\{H - \frac{al}{g} - K\,(v_1 + at)^2\right\}\partial t.$$

Then the total energy supplied to the machine in time t_0 is

$$E = 62{\cdot}4A\int_0^{t_0}(v_1 + at)\left\{H - \frac{al}{g} - K\,(v_1 + at)^2\right\}\partial t$$

$$= 62{\cdot}4A\left(\frac{v_1 + v_2}{2}\right)t_0\left\{H - \frac{l\,(v_2 - v_1)}{gt_0} - \frac{K}{2}\,(v_2^2 + v_1^2)\right\}.$$

If the mean demand during the time t_0 on the machine has been N horse-power then

$$550Nt_0 + \text{Loss of Kinetic Energy of the moving parts} = E.$$

If the governor is required to keep the variation of the angular speed within specified limits w_1 and w_2 for the given load change, then if I is the moment of inertia of the rotating masses

$$550Nt_0 = E - \tfrac{1}{2}I\,(w_1^2 - w_2^2).$$

The importance of having sufficiently large flywheels to keep the speed within reasonable variations when the load is suddenly changed is illustrated by an example of a test on the turbines at Kinlochleven. Before fitting flywheels the rise of speed of the 600 K.W. turbines when 50 per cent. of the load was thrown off was 29 per cent. After fitting flywheels the rise of speed when the whole load was thrown off was only 10 per cent.

If N_1 is the horse-power at the beginning of the period and N_2 at the end of the period and the efficiencies of the machines at these loads are e_1 and e_2 respectively, then

$$\frac{62{\cdot}4e_1Av_1}{550}\left(H - Kv_1^2 - \frac{v_1^2}{2g}\right) = N_1$$

and

$$\frac{62{\cdot}4e_2Av_2}{550}\left(H - Kv_2^2 - \frac{v_2^2}{2g}\right) = N_2,$$

and v_1 and v_2 can therefore be determined.

On the assumption that the horse-power varies uniformly

$$N = \frac{N_2 + N_1}{2}.$$

When there is a surge tank on the pipe line, the effective head at the turbine H_t, Fig. 274 A, is clearly changing during the surging period and it is only possible to integrate the total energy entering the turbine in a specified time by a step by step process.

From equation (2), page 402, y, and thus the effective head at the turbine, can be obtained for any instant and for small elements of time the energy entering the wheel estimated. It has been assumed in the surge tank problem on page 405 that the velocity along the penstock varies uniformly. In this case the energy in time dt is therefore proportional to H_t and the value of E can therefore be obtained by the aid of the curve, Fig. 275 A, showing levels in the surge tank

EXAMPLES.

(1) Find the theoretical horse-power of an overshot water-wheel 22 feet diameter, using 20,000,000 gallons of water per 24 hours under a total head of 25 feet.

(2) An overshot water-wheel has a diameter of 24 feet, and makes 8·5 revolutions per minute. The velocity of the water as it enters the buckets is to be twice that of the wheel's periphery.

If the angle which the water makes with the periphery is to be 15 degrees, find the direction of the tip of the bucket, and the relative velocity of the water and the bucket.

(3) The sluice of an overshot water-wheel 12 feet radius is vertically above the centre of the wheel. The surface of the water in the sluice channel is 2 feet 3 inches above the top of the wheel and the centre of the sluice opening is 8 inches above the top of the wheel. The velocity of the wheel periphery is to be one-half that of the water as it enters the buckets. Determine the number of rotations of the wheel, the point at which the water enters the buckets, and the direction of the edge of the bucket.

(4) An overshot wheel 25 feet diameter having a width of 5 feet, and depth of crowns 12 inches, receives 450 cubic feet of water per minute, and makes 6 revolutions per minute. There are 64 buckets.

The water enters the wheel at 15 degrees from the crown of the wheel with a velocity equal to twice that of the periphery, and at an angle of 20 degrees with the tangent to the wheel.

Assuming the buckets to be of the form shown in Fig. 180, the length of the radial portion being one-half the length of the outer face of the bucket, find how much water enters each bucket, and, allowing for centrifugal forces, the point at which the water begins to leave the buckets.

(5) An overshot wheel 32 feet diameter has shrouds 14 inches deep, and is required to give 29 horse-power when making 5 revolutions per minute.

Assuming the buckets to be one-third filled with water and of the same form as in the last question, find the width of the wheel, when the total fall is 32 feet and the efficiency 60 per cent.

Assuming the velocity of the water in the penstock to be $1\frac{3}{4}$ times that of the wheel's periphery, and the bottom of the penstock level with the top of the wheel, find the point at which the water enters the wheel. Find also where water begins to discharge from the buckets.

(6) A radial blade impulse wheel of the same width as the channel in which it runs, is 15 feet diameter. The depth of the sluice opening is 12 inches and the head above the centre of the sluice is 3 feet. Assuming a coefficient of velocity of 0·8 and that the edge of the sluice is rounded so that there is no contraction, and the velocity of the rim of the wheel is 0·4 the velocity of flow through the sluice, find the theoretical efficiency of the wheel.

(7) An overshot wheel has a supply of 30 cubic feet per second on a fall of 24 feet.

Determine the probable horse-power of the wheel, and a suitable width for the wheel.

(8) The water impinges on a Poncelet float at 15° with the tangent to the wheel, and the velocity of the water is double that of the wheel. Find, by construction, the proper inclination of the tip of the float.

(9) In a Poncelet wheel, the direction of the jet impinging on the floats makes an angle of 15° with the tangent to the circumference and the tip of the floats makes an angle of 30° with the same tangent. Supposing the velocity of the jet to be 20 feet per second, find, graphically or otherwise, (1) the proper velocity of the edge of the wheel, (2) the height to which the water will rise on the float above the point of admission, (3) the velocity and direction of motion of the water leaving the float.

(10) Show that the efficiency of a simple reaction wheel increases with the speed when frictional resistances are neglected, but is greatest at a finite speed when they are taken into account.

If the speed of the orifices be that due to the head (1) find the efficiency, neglecting friction; (2) assuming it to be the speed of maximum efficiency, show that $\frac{2}{9}$ of the head is lost by friction, and $\frac{1}{9}$ by final velocity of water.

(11) Explain why, in a vortex turbine, the inner ends of the vanes are inclined backwards instead of being radial.

(12) An inward flow turbine wheel has radial blades at the outer periphery, and at the inner periphery the blade makes an angle of 30° with the tangent. The total head is 70 feet and $r=\frac{R}{2}$. Find the velocity of the rim of the wheel if the water discharges radially. Friction neglected.

(13) The inner and outer diameters of an inward flow turbine wheel are 1 foot and 2 feet respectively. The water enters the outer circumference at 12° with the tangent, and leaves the inner circumference radially. The radial velocity of flow is 6 feet at both circumferences. The wheel makes 3·6 revolutions per second. Determine the angles of the vanes at both circumferences, and the theoretical hydraulic efficiency of the turbine.

(14) Water is supplied to an inward flow turbine at 44 feet per second, and at 10 degrees to the tangent to the wheel. The wheel makes 200

revolutions per minute. The inner radius is 1 foot and the outer radius 2 feet. The radial velocity of flow through the wheel is constant.

Find the inclination of the vanes at inlet and outlet of the wheel.

Determine the ratio of the kinetic energy of the water entering the wheel per pound to the work done on the wheel per pound.

(15) The supply of water for an inward flow reaction turbine is 500 cubic feet per minute and the available head is 40 feet. The vanes are radial at the inlet, the outer radius is twice the inner, the constant velocity of flow is 4 feet per second, and the revolutions are 850 per minute. Find the velocity of the wheel, the guide and vane angles, the inner and outer diameters, and the width of the bucket at inlet and outlet. Lond. Un. 1906.

(16) An inward flow turbine on 15 feet fall has an inlet radius of 1 foot and an outlet radius of 6 inches. Water enters at 15° with the tangent to the circumference and is discharged radially with a velocity of 8 feet per second. The actual velocity of water at inlet is 22 feet per second. The circumferential velocity of the inlet surface of the wheel is $19\frac{1}{2}$ feet per second.

Construct the inlet and outlet angles of the turbine vanes.

Determine the theoretical hydraulic efficiency of the turbine.

If the hydraulic efficiency of the turbine is assumed 80 per cent. find the vane angles.

(17) A quantity of water Q cubic feet per second flows through a turbine, and the initial and final directions and velocities are known. Apply the principle of equality of angular impulse and moment of momentum to find the couple exerted on the turbine.

(18) The wheel of an inward flow turbine has a peripheral velocity of 50 feet per second. The velocity of whirl of the incoming water is 40 feet per second, and the radial velocity of flow 5 feet per second. Determine the vane angle at inlet.

Taking the flow as 20 cubic feet per second and the total losses as 20 per cent. of the available energy, determine the horse-power of the turbine, and the head H.

If 5 per cent. of the head is lost in friction in the supply pipe, and the centre of the turbine is 15 feet above the tail race level, find the pressure head at the inlet circumference of the wheel.

(19) An inward flow turbine is required to give 200 horse-power under a head of 100 feet when running at 500 revolutions per minute. The velocity with which the water leaves the wheel axially may be taken as 10 feet per second, and the wheel is to have a double outlet. The diameter of the outer circumference may be taken as $1\frac{3}{4}$ times the inner. Determine the dimensions of the turbine and the angles of the guide blades and vanes of the turbine wheel. The actual efficiency is to be taken as 75 per cent. and the hydraulic efficiency as 80 per cent.

(20) An outward flow turbine wheel has an internal diameter of 5·249 feet and an external diameter of 6·25 feet. The head above the turbine is 141·5 feet. The width of the wheel at inlet is 10 inches, and the quantity

of water supplied per second is 215 cubic feet. Assuming the hydraulic losses are 20 per cent., determine the angles of tips of the vanes so that the water shall leave the wheel radially. Determine the horse-power of the turbine and verify the work done per pound from the triangles of velocities.

(21) The total head available for an inward-flow turbine is 100 feet.

The turbine wheel is placed 15 feet above the tail water level.

When the flow is normal, there is a loss of head in the supply pipe of 3 per cent. of the head; in the guide passages a loss of 5 per cent.; in the wheel 9 per cent.; in the down pipe 1 per cent.; and the velocity of flow from the wheel and in the supply pipe, and also from the down pipe is 8 feet per second.

The diameter of the inner circumference of the wheel is $9\frac{1}{2}$ inches and of the outer 19 inches, and the water leaves the wheel vanes radially. The wheel has radial vanes at inlet.

Determine the number of revolutions of the wheel, the pressure head in the eye of the wheel, the pressure head at the circumference to the wheel, the pressure head at the entrance to the guide chamber, and the velocity which the water has when it enters the wheel. From the data given

$$\frac{v_1^2}{g} = \cdot 81\,\mathrm{H}.$$

(22) A horizontal inward flow turbine has an internal diameter of 5 feet 4 inches and an external diameter of 7 feet. The crowns of the wheel are parallel and are 8 inches apart. The difference in level of the head and tail water is 6 feet, and the upper crown of the wheel is just below the tail water level. Find the angle the guide blade makes with the tangent to the wheel, when the wheel makes 32 revolutions per minute, and the flow is 45 cubic feet per second. Neglecting friction, determine the vane angles, the horse-power of the wheel and the theoretical hydraulic efficiency.

(23) A parallel flow turbine has a mean diameter of 11 feet.

The number of revolutions per minute is 15, and the axial velocity of flow is 3·5 feet per second. The velocity of the water along the tips of the guides is 15 feet per second.

Determine the inclination of the guide blades and the vane angles that the water shall enter without shock and leave the wheel axially.

Determine the work done per pound of water passing through the wheel.

(24) The diameter of the inner crown of a parallel flow pressure turbine is 5 feet and the diameter of the outer crown is 8 feet. The head over the wheel is 12 feet. The number of revolutions per minute is 52. The radial velocity of flow through the wheel is 4 feet per second.

Assuming a hydraulic efficiency of 0·8, determine the guide blade angles and vane angles at inlet for the three radii 2 feet 6 inches, 3 feet 3 inches and 4 feet.

Assuming the depth of the wheel is 8 inches, draw suitable sections of the vanes at the three radii.

Find also the width of the guide blade in plan, if the upper and lower edges are parallel, and the lower edge makes a constant angle with the

plane of the wheel, so that the stream lines at the inner and the outer crown may have the correct inclinations.

(25) A parallel flow impulse turbine works under a head of 64 feet. The water is discharged from the wheel in an axial direction with a velocity due to a head of 4 feet. The circumferential speed of the wheel at its mean diameter is 40 feet per second.

Neglecting all frictional losses, determine the mean vane and guide angles. Lond. Un. 1905.

(26) An outward flow impulse turbine has an inner diameter of 5 feet, an external diameter of 6 feet 3 inches, and makes 450 revolutions per minute.

The velocity of the water as it leaves the nozzles is double the velocity of the periphery of the wheel, and the direction of the water makes an angle of 30 degrees with the circumference of the wheel.

Determine the vane angle at inlet, and the angle of the vane at outlet so that the water shall leave the wheel radially.

Find the theoretical hydraulic efficiency. If 8 per cent. of the head available at the nozzle is lost in the wheel, find the vane angle at exit that the water shall leave radially.

What is now the hydraulic efficiency of the turbine?

(27) In an axial flow Girard turbine, let V be the velocity due to the effective head. Suppose the water issues from the guide blades with the velocity 0·95 V, and is discharged axially with a velocity ·12 V. Let the velocity of the receiving and discharging edges be 0·55 V.

Find the angle of the guide blades, receiving and discharging angles of wheel vanes and hydraulic efficiency of the turbine.

(28) Water is supplied to an axial flow impulse turbine, having a mean diameter of 6 feet, and making 144 revolutions per minute, under a head of 100 feet. The angle of the guide blade at entrance is 30°, and the angle the vane makes with the direction of motion at exit is 30°. Eight per cent. of the head is lost in the supply pipe and guide. Determine the relative velocity of water and wheel at entrance, and on the assumption that 10 per cent. of the total head is lost in friction and shock in the wheel, determine the velocity with which the water leaves the wheel. Find the hydraulic efficiency of the turbine.

(29) The guide blades of an inward flow turbine are inclined at 30 degrees, and the velocity U along the tip of the blade is 60 feet per second. The velocity of the wheel periphery is 55 feet per second. The guide blades are turned so that they are inclined at an angle of 15 degrees, the velocity U remaining constant. Find the loss of head due to shock at entrance.

If the radius of the inner periphery is one-half that of the outer and the radial velocity through the wheel is constant for any flow, and the water left the wheel radially in the first case, find the direction in which it leaves in the second case. The inlet radius is twice the outlet radius.

(30) The supply of water to a turbine is controlled by a speed gate between the guides and the wheel. If when the gate is fully open the velocity with which the water approaches the wheel is 70 feet per second

and it makes an angle of 15 degrees with the tangent to the wheel, find the loss of head by shock when the gate is half closed. The velocity of the inlet periphery of the wheel is 75 feet per second.

(31) A Pelton wheel, which may be assumed to have semi-cylindrical buckets, is 2 feet diameter. The available pressure at the nozzle when it is closed is 200 lbs. per square inch, and the supply when the nozzle is open is 100 cubic feet per minute. If the revolutions are 600 per minute, estimate the horse-power of the wheel and its efficiency.

(32) Show that the efficiency of a Pelton wheel is a maximum—neglecting frictional and other losses—when the velocity of the cups equals half the velocity of the jet.

25 cubic feet of water are supplied per second to a Pelton wheel through a nozzle, the area of which is 44 square inches. The velocity of the cups is 41 feet per second. Determine the horse-power of the wheel assuming an efficiency of 75 per cent.

CHAPTER X.

CENTRIFUGAL PUMPS.

Pumps are machines driven by some prime mover, and used for raising fluids from a lower to a higher level, or for imparting energy to fluids. For example, when a mine has to be drained the water may be simply raised from the mine to the surface, and work done upon it against gravity. Instead of simply raising the water through a height h, the same pumps might be used to deliver water into pipes, the pressure in which is wh pounds per square foot.

A pump can either be a suction pump, a pressure pump, or both. If the pump is placed above the surface of the water in the well or sump, the water has to be first raised by suction; the maximum height through which a pump can draw water, or in other words the maximum vertical distance the pump can be placed above the water in the well, is theoretically 34 feet, but practically the maximum is from 25 to 30 feet. If the pump delivers the water to a height h above the pump, or against a pressure-head h, it is called a force pump.

216B. *Centrifugal and turbine pumps.

Theoretically any reaction turbine could be made to work as a pump by rotating the wheel in the opposite direction to that in which it rotates as a turbine, and supplying it with water at the circumference, with the same velocity, but in the inverse direction to that at which it was discharged when acting as a turbine. Up to the present, only outward flow pumps have been constructed, and, as will be shown later, difficulty would be experienced in starting parallel flow or inward flow pumps.

Several types of centrifugal pumps (outward flow) are shown in Figs. 277 to 280.

The principal difference between the several types is in the form of the casing surrounding the wheel, and this form has considerable influence upon the efficiency of the pump. The reason

* See Appendix, page 568.

for this can be easily seen in a general way from the following consideration. The water approaches a turbine wheel with a high velocity and in a direction making a small angle with the direction of motion of the inlet circumference of the wheel, and

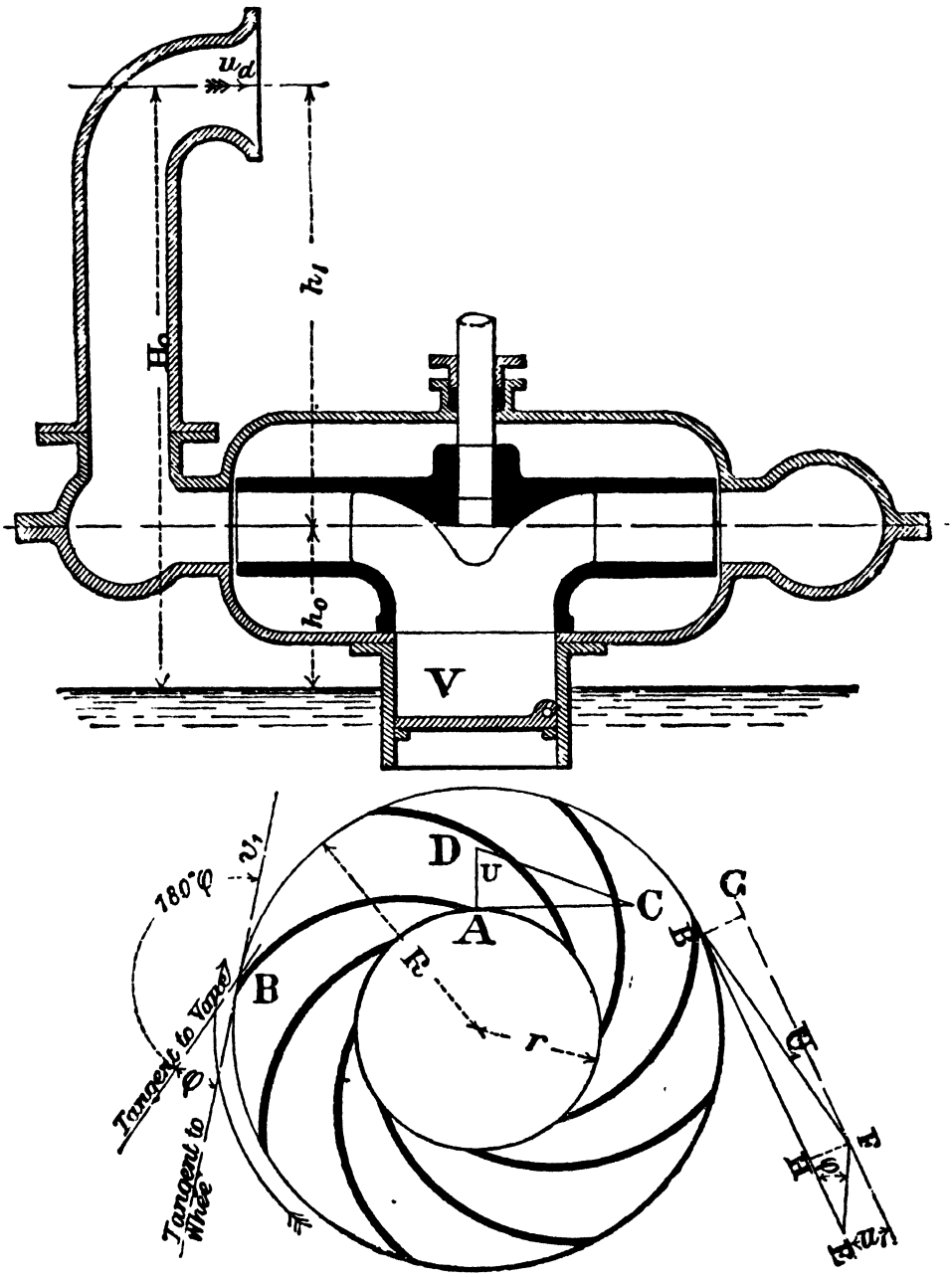

Fig. 277. Diagram of Centrifugal Pump.

thus it has a large velocity of whirl. When the water leaves the wheel its velocity is small and the velocity of whirl should be zero. In the centrifugal pump these conditions are entirely reversed; the water enters the wheel with a small velocity, and leaves

it with a high velocity. If the case surrounding the wheel admits of this velocity being diminished gradually, the kinetic energy of the water is converted into useful work, but if not, it is destroyed by eddy motions in the casing, and the efficiency of the pump is accordingly low.

In Fig. 277 a circular casing surrounds the wheel, and practically the whole of the kinetic energy of the water when it leaves the wheel is destroyed; the efficiency of such pumps is generally much less than 50 per cent.

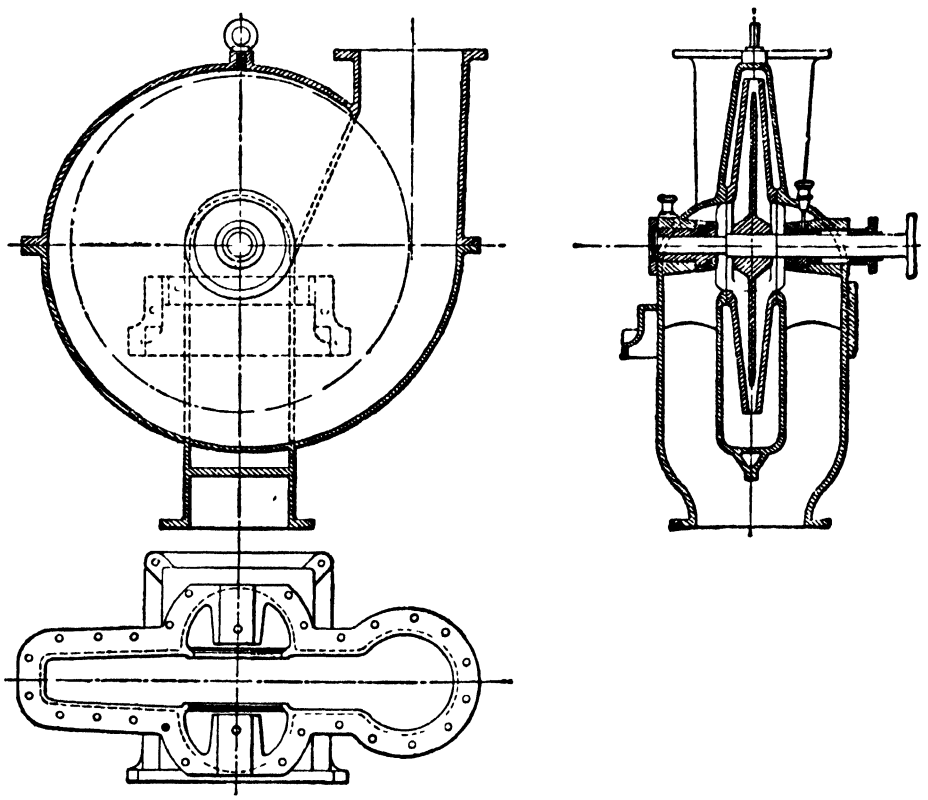

Fig. 278. *Centrifugal Pump with spiral casing.

The casing of Fig. 278 is made of spiral form, the sectional area increasing uniformly towards the discharge pipe, and thus being proportional to the quantity of water flowing through the section. It may therefore be supposed that the mean velocity of flow through any section is nearly constant, and that the stream lines are continuous.

The wheel of Fig. 279 is surrounded by a large whirlpool chamber in which, as shown later, the velocity with which the water rotates round the wheel gradually diminishes, and the velocity head with which the water leaves the wheel is partly converted into pressure head.

The same result is achieved in the pump of Fig. 280 by allowing

* See page 568

the water as it leaves the wheel to enter guide passages, similar to those used in a turbine to direct the water to the wheel. The area of these passages gradually increases and a considerable portion of the velocity head is thus converted into pressure head and is available for lifting water.

This class of centrifugal pump is known as the turbine pump.

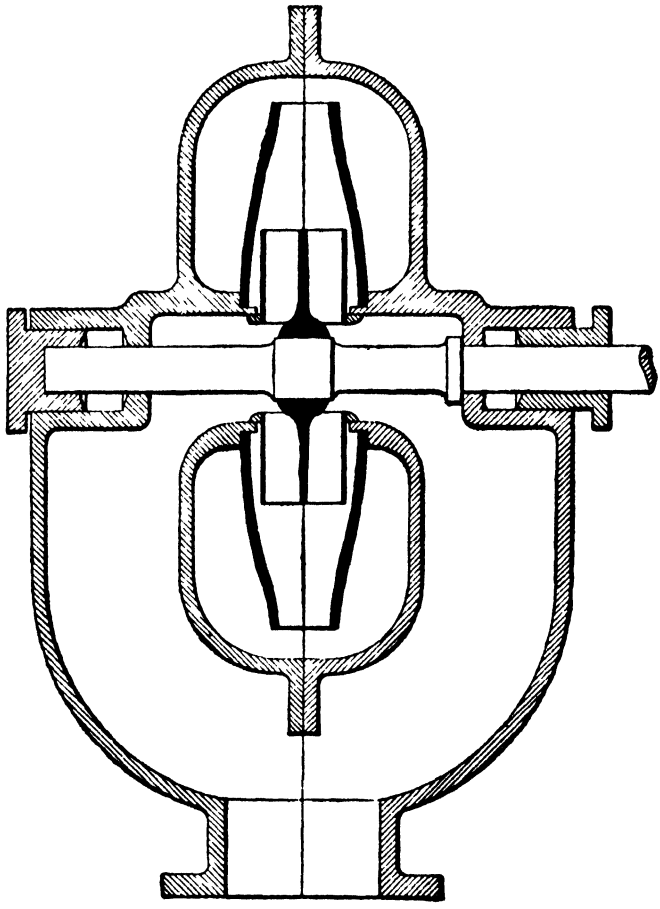

Fig. 279. Diagram of Centrifugal Pump with Whirlpool Chamber.

217. Starting centrifugal or turbine pumps.

A centrifugal pump cannot commence delivery unless the wheel, casing, and suction pipe are full of water.

If the pump is below the water in the well there is no difficulty in starting as the casing will be maintained full of water.

When the pump is above the water in the well, as in Fig. 277, a non-return valve V must be fitted in the suction pipe, to prevent the pump when stopped from being drained. If the pump becomes empty, or when the pump is first set to work, special means have to be provided for filling the pump case. In large pumps the air may be expelled by means of steam, which becomes condensed and the water rises from the well, or they should be provided with

an air-pump or ejector as an auxiliary to the pump. Small pumps can generally be easily filled by hand through a pipe such as shown at P, Fig. 280.

With some classes of pumps, if the pump has to commence delivery against full head, a stop valve on the rising main, Fig. 296, is closed until the pump has attained the speed necessary to commence delivery*, after which the stop valve is slowly opened.

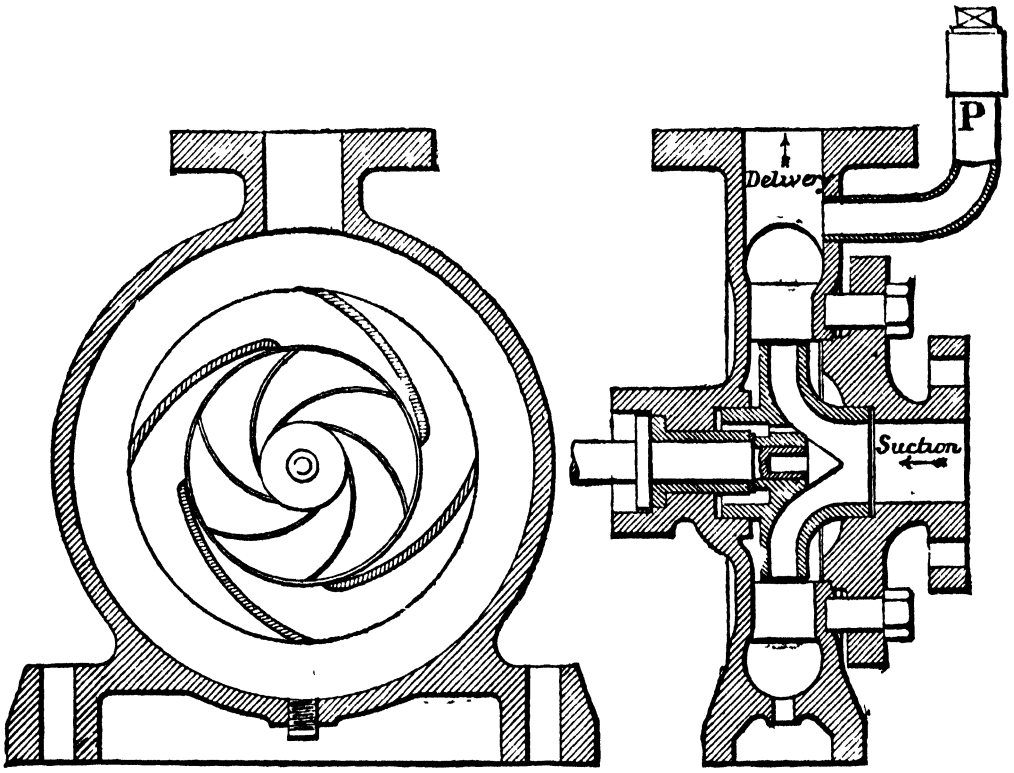

Fig. 280. Turbine Pump.

It will be seen later that, under special circumstances, other provisions will have to be made to enable the pump to commence delivery.

218. Form of the vanes of centrifugal pumps.

The conditions to be satisfied by the vanes of a centrifugal pump are exactly the same as for a turbine. At inlet the direction of the vane should be parallel to the direction of the relative velocity of the water and the tip of the vane, and the velocity with which the water leaves the wheel, relative to the pump case, is the vector sum of the velocity of the tip of the vane and the velocity relative to the vane. Between inlet and outlet the vanes may, as shown on page 366, have the involute form.

* See page 436.

Suppose the wheel and casing of Fig. 277 is full of water, and the wheel is rotated in the direction of the arrow with such a velocity that water enters the wheel in a known direction with a velocity U, Fig. 281, not of necessity radial.

Let v be the velocity of the receiving edge of the vane or inlet circumference of the wheel; v_1 the velocity of the discharging circumference of the wheel; U_1 the absolute velocity of the water as it leaves the wheel; V and V_1 the velocities of whirl at inlet and outlet respectively; V_r and v_r the relative velocities of the water and the vane at inlet and outlet respectively; u and u_1 the radial velocities at inlet and outlet respectively.

The triangle of velocities at inlet is ACD, Fig. 281, and if the vane at A, Fig. 277, is made parallel to CD the water will enter the wheel without shock.

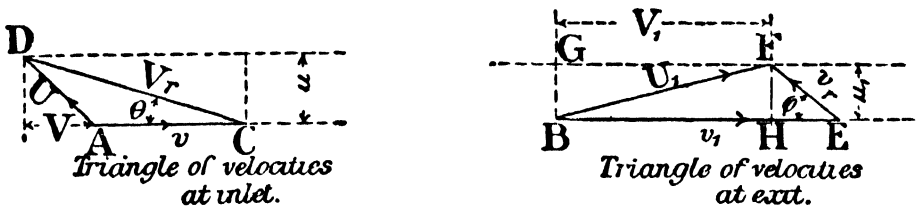

Fig. 281.

The wheel being full of water, there is continuity of flow, and if A and A_1 are the circumferential areas of the inner and outer circumferences, the radial component of the velocity of exit at the outer circumference is

$$u_1 = \frac{Au}{A_1}.$$

If the direction of the tip of the vane at the outer circumference is known the triangle of velocities at exit, Fig. 281, can be drawn as follows.

Set out BG radially and equally to u_1, and BE equal to v_1.

Draw GF parallel to BE at a distance from BE equal to u_1, and EF parallel to the tip of the vane to meet GF in F.

Then BF is the vector sum of BE and EF and is the velocity with which the water leaves the wheel relative to the fixed casing.

219. Work done on the water by the wheel.

Let R and r be the radii of the discharging and receiving circumferences respectively.

The change in angular momentum of the water as it passes through the wheel is $V_1R/g \pm Vr/g$ per pound of flow, the plus sign being used when V is in the opposite direction to V_1, as in Fig. 281.

Neglecting frictional and other losses, the work done by the wheel on the water per pound (see page 275) is

$$\frac{V_1 v_1}{g} \pm \frac{Vv}{g}.$$

If U is radial, as in Fig. 277, V is zero, and the work done on the water by the wheel is

$$\frac{V_1 v_1}{g} \text{ foot lbs. per lb. flow.}$$

If then H_0, Fig. 277, is the total height through which the water is lifted from the sump or well, and u_d is the velocity with which the water is delivered from the delivery pipe, the work done on each pound of water is

$$H_0 + \frac{u_d^2}{2g},$$

and therefore,

$$\frac{V_1 v_1}{g} = H_0 + \frac{u_d^2}{2g} = H.$$

Let $(180° - \phi)$ be the angle which the direction of the vane at exit makes with the direction of motion, and $(180° - \theta)$ the angle which the vane makes with the direction of motion at inlet. Then ACD is θ and BEF is ϕ.

In the triangle HEF, $HE = HF \cot \phi$, and therefore,

$$V_1 = v_1 - u_1 \cot \phi.$$

The theoretical lift, therefore, is

$$H = H_0 + \frac{u_d^2}{2g} = \frac{v_1 (v_1 - u_1 \cot \phi)}{g}.$$

If Q is the discharge and A_1 the peripheral area of the discharging circumference,

$$u_1 = \frac{Q}{A_1},$$

and

$$H = \frac{v_1^2 - v_1 \frac{Q}{A_1} \cot \phi}{g} \quad \text{.....(1).}$$

If, therefore, the water enters the wheel without shock and all resistances are neglected, the lift is independent of the ratio $\frac{R}{r}$, and depends only on the velocity and inclination of the vane at the discharging circumference.

220. Ratio of V_1 to v_1.

As in the case of the turbine, for any given head H, V_1 and v_1 can theoretically have any values consistent with the product

V_1v_1 being equal to gH, the ratio of V_1 to v_1 simply depending upon the magnitude of the angle ϕ.

The greater the angle ϕ is made the less the velocity v_1 of the periphery must be for a given lift.

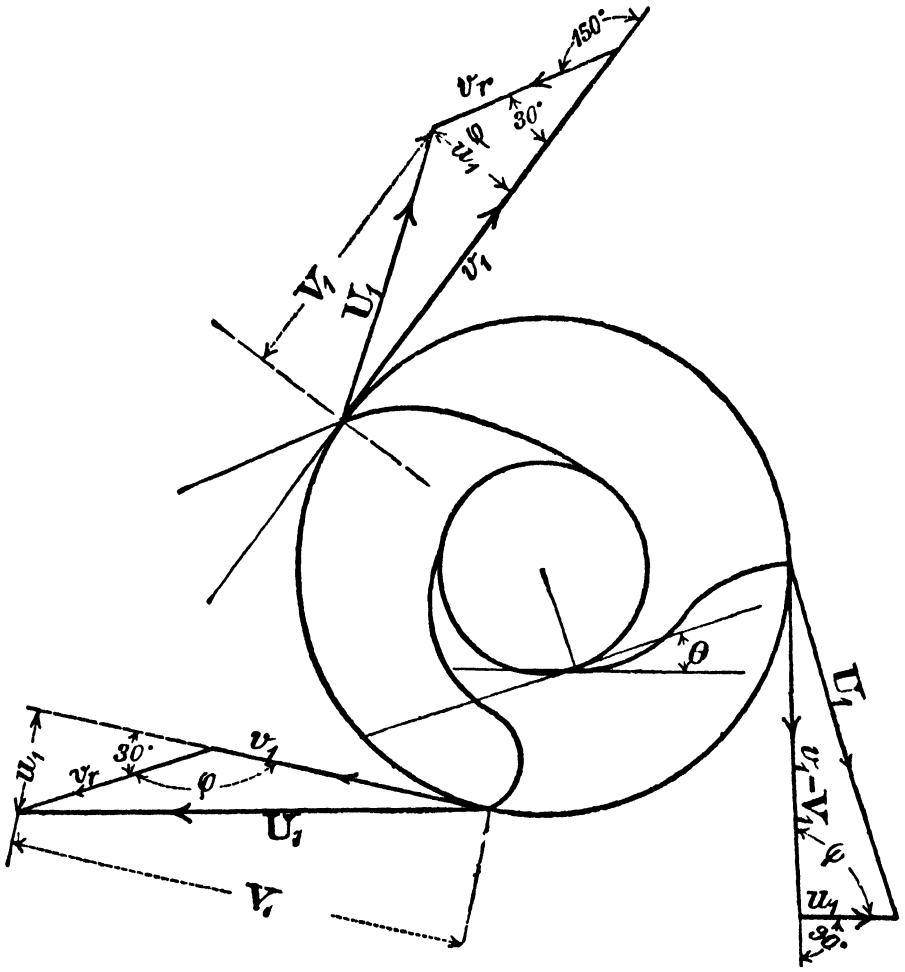

Fig 282.

This is shown at once by equation (1), section 219, and is illustrated in Fig. 282. The angle ϕ is given three values, 30 degrees, 90 degrees and 150 degrees, and the product V_1v_1 and also the radial velocity of flow u_1 are kept constant. The theoretical head and also the discharge for the three cases are therefore the same. The diagrams are drawn to a common scale, and it can therefore be seen that as ϕ increases v_1 diminishes, and U_1 the velocity with which the water leaves the wheel increases.

221. The kinetic energy of the water at exit from the wheel.

Part of the head H impressed upon the water by the wheel increases the pressure head between the inlet and outlet, and the remainder appears as the kinetic energy of the water as it leaves

the wheel. This kinetic energy is equal to $\frac{U_1^2}{2g}$, and can only be utilised to lift the water if the velocity can be gradually diminished so as to convert velocity head into pressure head. This however is not very easily accomplished, without being accompanied by a considerable loss by eddy motions. If it be assumed that the same proportion of the head $\frac{U_1^2}{2g}$ in all cases is converted into useful work, it is clear that the greater U_1, the greater the loss by eddy motions, and the less efficient will be the pump. It is to be expected, therefore, that the less the angle ϕ, the greater will be the efficiency, and experiment shows that for a given form of casing, the efficiency does increase as ϕ is diminished.

222. Gross lift of a centrifugal pump.

Let h_a be the actual height through which water is lifted; h_s the head lost in the suction pipe; h_d the head lost in the delivery pipe; and u_d the velocity of flow along the delivery pipe.

Any other losses of head in the wheel and casing are incident to the pump, but h_s, h_d, and the head $\frac{u_d^2}{2g}$ should be considered as external losses.

The gross lift of a pump is then

$$h = h_a + h_s + h_d + \frac{u_d^2}{2g},$$

and this is always less than H.

223. Efficiencies of a centrifugal pump.

Manometric efficiency. The ratio $\frac{h}{H}$, or

$$e = \frac{g.h}{v_1^2 - v_1 \frac{Q}{A_1} \cot \phi},$$

is the manometric efficiency of the pump at normal discharge.

The reason for specifically defining e as the manometric efficiency at normal discharge is simply that the theoretical lift H has been deduced from consideration of a definite discharge Q, and only for this one discharge can the conditions at the inlet edge be as assumed.

A more general definition is, however, generally given to e, and for any discharge Q, therefore, the manometric efficiency may be taken as the ratio of the gross lift at that discharge to the theoretical head

$$\frac{v_1^2 - v_1 \frac{Q}{A_1} \cot \phi}{g}.$$

This manometric efficiency of the pump must not be confused with the efficiency obtained by dividing the work done by the pump, by the energy required to do that work, as the latter in many pumps is zero, when the former has its maximum value.

Hydraulic efficiency. The hydraulic efficiency of a pump is the ratio of the gross work done by the pump to the work done on the pump wheel.

Let W = the weight of water lifted per second.

Let h = the gross head

$$= h_a + h_s + h_d + \frac{u_d^2}{2g}.$$

Let E = the work done on the pump wheel in foot pounds per second.

Let e_h = the hydraulic efficiency. Then

$$e_h = \frac{W \cdot h}{E}.$$

The work done on the pump wheel is less than the work done on the pump shaft by the belt or motor which drives the pump, by an amount equal to the energy lost by friction at the bearings of the machine. This generally, in actual machines, can be approximately determined by running the machine without load.

Actual efficiency. From a commercial point of view, what is generally required is the ratio of the useful work done by the pump, taking it as a whole, to the work done on the pump shaft.

Let E_s be the energy given to the pump shaft per sec. and e_m the mechanical efficiency of the pump, then

$$E = E_s \cdot e_m,$$

and the actual efficiency

$$e_a = \frac{W \cdot h_a}{E_s}.$$

Gross efficiency of the pump. The gross efficiency of the pump itself, including mechanical as well as fluid losses, is

$$e_g = \frac{W \cdot h}{E_s}.$$

224. Experimental determination of the efficiency of a centrifugal pump.

The actual and gross efficiencies of a pump can be determined directly by experiment, but the hydraulic efficiency can only be determined when at all loads the mechanical efficiency of the pump is known.

To find the actual efficiency, it is only necessary to measure the height through which water is lifted, the quantity of water

discharged, and the energy E_s given to the pump shaft in unit time.

A very convenient method of determining E_s with a fair degree of accuracy is to drive the pump shaft direct by an electric motor, the efficiency curve* for which at varying loads is known. A better method is to use some form of transmission dynamometer†.

225. Design of pump to give a discharge Q.

If a pump is required to give a discharge Q under a gross lift h, and from previous experience the probable manometric efficiency e at this discharge is known, the problem of determining suitable dimensions for the wheel of the pump is not difficult. The difficulty really arises in giving a correct value to e and in making proper allowance for leakage.

This difficulty will be better appreciated after the losses in various kinds of pumps have been considered. It will then be seen that e depends upon the angle ϕ, the velocity of the wheel, the dimensions of the wheel, the form of the vanes of the wheel, the discharge through the wheel, and upon the form of the casing surrounding the wheel; the form of the casing being just as important, or more important, than the form of the wheel in determining the probable value of e.

Design of the wheel of a pump for a given discharge under a given head. If a pump is required to give a discharge Q under an effective head h_a, the gross head h can only be determined if h_s, h_d, and $\frac{u_d^2}{2g}$, are known.

Any suitable value can be given to the velocity u_d. If the pipes are long it should not be much greater than 5 feet per second for reasons explained in the chapter on pipes, and the velocity u_s in the suction pipe should be equal to or less than u_d. The velocities u_s and u_d having been settled, the losses h_s and h_d can be approximated to and the gross head h found. In the suction pipe, as explained on page 422, a foot valve is generally fitted, at which, at high velocities, a loss of head of several feet may occur. The angle ϕ is generally made from 10 to 90 degrees. Theoretically, as already stated, it can be made much greater than 90 degrees, but the efficiency of ordinary centrifugal pumps might be very considerably diminished as ϕ is increased.

The manometric efficiency e varies very considerably; with radial blades and a circular casing, the efficiency is not generally

* See *Electrical Engineering*, Thomalen-Howe, p. 195.
† See paper by Stanton, *Proc. Inst. Mech. Engs.*, 1903.

more than 0·3 to 0·4. With a vortex chamber, or a spiral casing, and the vanes at inlet inclined so that the tip is parallel to the relative velocity of the water and the vane, and ϕ not greater than 90 degrees, the manometric efficiency e is from 0·5 to 0·75, being greater the less the angle ϕ, and with properly designed guide blades external to the wheel, e is from 0·6 to ·85.

The ratio of the diameter of the discharging circumference to the inlet circumference is somewhat arbitrary and is generally made from 2 to 3. Except for the difficulty of starting (see section 226), the ratio might with advantage be made much smaller, as by so doing the frictional losses might be considerably reduced. The radial velocity u_1 may be taken from 2 to 10 feet per second.

Having given suitable values to u, and to any two of the three quantities, e, v, and ϕ, the third can be found from the equation

$$h = \frac{e\,(v_1^2 - v_1 u_1 \cot \phi)}{g}.$$

The internal diameter d of the wheel will generally be settled from consideration of the velocity of flow u_2 into the wheel. This may be taken as equal to or about equal to u, but in special cases it may be larger than u.

Then if the water is admitted to the wheel at both sides, as in Fig. 278,

$$\frac{2\pi}{4} d^2 u_2 = \mathrm{Q},$$

from which d can be calculated when u_2 and Q are known.

Let b be the width of the vane at inlet and B at outlet, and D the diameter of the outlet circumference.

Then $$b = \frac{\mathrm{Q}}{\pi d u},$$

and $$\mathrm{B} = \frac{\mathrm{Q}}{\pi \mathrm{D} u_1}.$$

If the water moves toward the vanes at inlet radially, the inclination θ of the vane that there shall be no shock is such that

$$\tan \theta = \frac{u}{v},$$

and if guide blades are to be provided external to the wheel, as in Fig. 280, the inclination α of the tip of the guide blade with the direction of v_1 is found from

$$\tan \alpha = \frac{u_1}{\mathrm{V}_1}.$$

The guide passages should be so proportioned that the velocity U_1 is gradually diminished to the velocity in the delivery pipe.

Limiting velocity of the rim of the wheel. Quite apart from head lost by friction in the wheel due to the relative motion of the water and the wheel, there is also considerable loss of energy external to the wheel due to the relative motion of the water and the wheel. Between the wheel and the casing there is in most pumps a film of water, and between this film and the wheel, frictional forces are set up which are practically proportional to the square of the velocity of the wheel periphery and to the area of the wheel crowns. An attempt is frequently made to diminish this loss by fixing the vanes to a central diaphragm only, the wheel thus being without crowns, the outer casing being so formed that there is but a small clearance between it and the outer edges of the vanes. At high velocities these frictional resistances may be considerable. To keep them small the surface of the wheel crowns and vanes must be made smooth, and to this end many high speed wheels are carefully finished.

Until a few years ago the peripheral velocity of pump wheels was generally less than 50 feet per second, and the best velocity was supposed to be about 30 feet per second. They are now, however, run at much higher speeds, and the limiting velocities are fixed from consideration of the stresses in the wheel due to centrifugal forces. Peripheral velocities of nearly 200 feet per second are now frequently used, and Rateau has constructed small pumps with a peripheral velocity of 250 feet per second*.

Example To find the proportions of a pump with radial blades at outlet (*i.e.* $\phi=90°$) to lift 10 cubic feet of water per second against a head of 50 feet.

Assume there are two suction pipes and that the water enters the wheel from both sides, as in Fig. 273, also that the velocity in the suction and delivery pipes and the radial velocity through the wheel are 6 feet per second, and the manometric efficiency is 75 per cent.

First to find v_1.

Since the blades are radial, $$\cdot 75\,\frac{v_1^2}{g}=50,$$

from which $$v_1=46 \text{ feet per sec.}$$

To find the diameter of the suction pipes.

The discharge is 10 cubic feet per second, therefore

$$2\,.\,\frac{\pi}{4}\,d^2\,.\,6=10,$$

from which $$d=1\cdot 03'=12\tfrac{3}{8}''.$$

If the radius R of the external circumference be taken as $2r$ and r is taken equal to the radius of the suction pipes, then $R=12\frac{3}{8}''$, and the number of revolutions per second will be

$$n=\frac{46}{2\,.\,\pi\,.\,1\cdot 03}=7\cdot 1.$$

The velocity of the inner edge of the vane is

$$v=23 \text{ feet per sec.}$$

* *Engineer*, 1902.

The inclination of the vane at inlet that the water may move on to the vane without shock is

$$\tan\theta = \tfrac{6}{78},$$

and the water when it leaves the wheel makes an angle α with v_1 such that

$$\tan\alpha = \tfrac{6}{46}.$$

If there are guide blades surrounding the wheel, α gives the inclination of these blades.

The width of the wheel at discharge is

$$w = \frac{Q}{\pi \,.\, D \,.\, 6'} = \frac{10}{\pi \,.\, 2\cdot06 \times 6} = \cdot258'$$

$$= 3\tfrac{1}{8} \text{ inches about.}$$

The width of the wheel at inlet $= 6\tfrac{1}{4}$ inches.

226. The centrifugal head impressed on the water by the wheel. Forced Vortex.

Head against which a pump will commence to discharge. As shown on page 335, the centrifugal head impressed on the water as it passes through the wheel is

$$h_c = \frac{v_1^2}{2g} - \frac{v^2}{2g},$$

but this is not the lift of the pump. Theoretically it is the head which will be impressed on the water when there is no flow through the wheel, and is accordingly the difference between the pressure at inlet and outlet when the pump is first set in motion; or it is the statical head which the pump will maintain when running at its normal speed. If this is less than $\frac{eV_1v_1}{g}$, the pump theoretically cannot start lifting against its full head without being speeded up above its normal velocity.

The centrifugal head is, however, always greater than

$$\frac{v_1^2}{2g} - \frac{v^2}{2g},$$

as the water in the eye of the wheel and in the casing surrounding the wheel is made to rotate by friction.

For a pump having a wheel seven inches diameter surrounded by a circular casing 20 inches diameter, Stanton* found that, when the discharge was zero and the vanes were radial at exit, h_c was $\frac{1\cdot07v^2}{2g}$, and with curved vanes, ϕ being 30 degrees, h_c was $\frac{1\cdot12v^2}{2g}$.

For a pump with a spiral case surrounding the wheel, the centrifugal head h_c when there is no discharge, cannot be much greater than $\frac{v_1^2}{2g}$, as the water surrounding the wheel is prevented from rotating by the casing being brought near to the wheel at one point.

* *Proceedings Inst. M. E.*, 1903.

Parsons found for a pump having a wheel 14 inches diameter with radial vanes at outlet, and running at 300 revolutions per minute, that the head maintained without discharge was $\frac{1{\cdot}03v^2}{2g}$, and with an Appold* wheel running at 320 revolutions per minute the statical head was $\frac{0{\cdot}98v^2}{2g}$. For a pump, with spiral casing, having a rotor 1·54 feet diameter, the least velocity at which it commenced to discharge against a head of 14·67 feet was 392 revolutions per minute, and thus h_c was $\frac{{\cdot}95v_1^2}{2g}$, and the least velocity against a head of 17·4 feet was 424 revolutions per minute or h_c was again $\frac{0{\cdot}95v_1^2}{2g}$. For a pump with circular casing larger than the wheel, h_c was $\frac{1{\cdot}05v_1^2}{2g}$. For a pump having guide passages surrounding the wheel, and outside the guide passages a circular chamber as in Fig. 280, the centrifugal head may also be larger than $\frac{v_1^2}{2g}$; the mean actual value for this pump was found to be $1{\cdot}087\frac{v_1^2}{2g}$.

Stanton found, when the seven inches diameter wheels mentioned above discharged into guide passages surrounded by a circular chamber 20 inches diameter, that h_c was $\frac{1{\cdot}48v_1^2}{2g}$ when the vanes of the wheel were radial, and $\frac{1{\cdot}39v_1^2}{2g}$ when ϕ was 30 degrees.

That the centrifugal head when the wheel has radial vanes is likely to be greater than when the vanes of the wheel are set back is to be seen by a consideration of the manner in which the water in the chamber outside the guide passages is probably set in motion, Fig. 283. Since there is no discharge, this rotation cannot be caused by the water passing through the pump, but must be due to internal motions set up in the wheel and casing. The water in the guide chamber cannot obviously rotate about the axis O, but there is a tendency for it to do so, and consequently stream line motions, as shown in the figure, are probably set up. The layer of water nearest the outer circumference of the wheel will no doubt be dragged along by friction in the direction shown by the arrow, and water will flow from the outer casing to take its place; the stream lines will give motion to the water in the outer casing.

* See page 442.

When the vanes in the wheel are radial and as long as a vane is moving between any two guide vanes, the straight vane prevents the friction between the water outside the wheel and that inside, from dragging the water backwards along the vane, but when the vane is set back and the angle ϕ is greater than 90 degrees, there will be a tendency for the water in the wheel to move backwards while that in the guide chamber moves forward, and consequently the velocity of the stream lines in the casing will be less in the latter case than in the former. In either case, the general direction of flow of the stream lines, in the guide chamber, will be in the direction of rotation of the wheel, but due to friction and eddy motions, even with radial vanes, the velocity of the stream

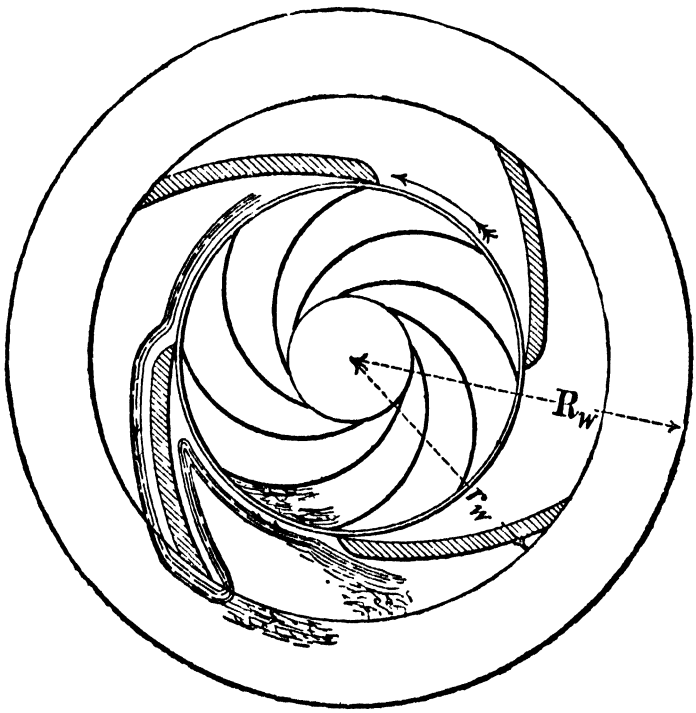

Fig. 283.

lines will be less than the velocity v_1 of the periphery of the wheel. Just outside the guide chambers the velocity of rotation will be less than v_1. In the outer chamber it is to be expected that the water will rotate as in a free vortex, or its velocity of whirl will be inversely proportional to the distance from the centre of the rotor, or will rotate in some manner approximating to this.

The head which a pump, with a vortex chamber, will theoretically maintain when the discharge is zero. In this case it is probable that as the discharge approaches zero, in addition to the water in the wheel rotating, the water in the vortex chamber will also rotate because of friction.

The centrifugal head due to the water in the wheel is

$$\frac{v_1^2}{2g} - \frac{v^2}{2g}.$$

If $R = 2r$, this becomes $\frac{3}{4}\frac{v_1^2}{2g}$.

The centrifugal head due to the water in the chamber is, Fig. 284,

$$\int_{r_w}^{R_w} \frac{v_0^2 dr}{g r_0},$$

r_0 and v_0 being the radius and tangential velocity respectively of any ring of water of thickness dr.

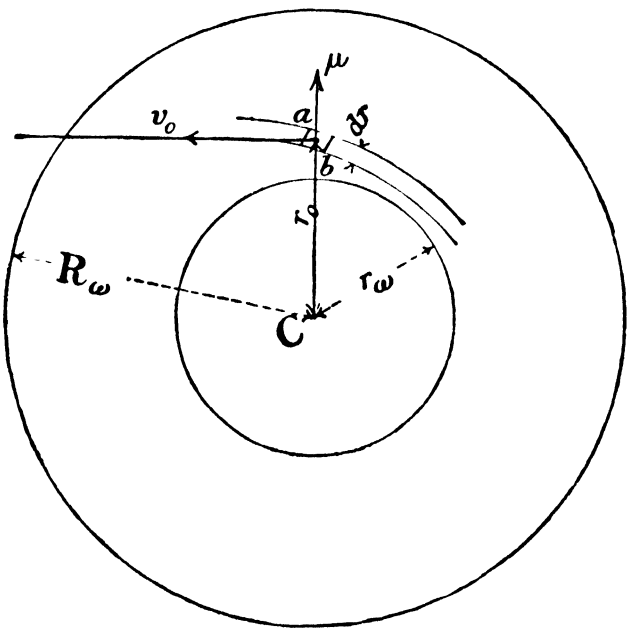

Fig. 284.

If it be assumed that $v_0 r_0$ is a constant, the centrifugal head due to the vortex chamber is

$$\frac{v_1^2 r_1^2}{g}\int_{r_w}^{R_w}\frac{dr}{r_0^3} = \frac{v_1^2 r_1^2}{2g}\left(\frac{1}{r_w^2} - \frac{1}{R_w^2}\right).$$

The total centrifugal head is then

$$h_c = \frac{v_1^2}{2g} - \frac{v^2}{2g} + \frac{v_1^2 r_1^2}{2g}\left(\frac{1}{r_w^2} - \frac{1}{R_w^2}\right).$$

If r_w is $2r$ and R_w is $2r_w$,

$$h_c = \frac{1{\cdot}5 v_1^2}{2g}.$$

The conditions here assumed, however, give h_c too high. In Stanton's experiments h_c was only $\frac{1{\cdot}12 v_1^2}{2g}$. Decouer from experi-

ments on a small pump with a vortex chamber, the diameter being about twice the diameter of the wheel, found h_c to be $\frac{1 \cdot 3 v_1^2}{2g}$.

Let it be assumed that h_c is $\frac{m v_1^2}{2g}$ in any pump, and that the lift of the pump when working normally is

$$h = \frac{e V_1 v_1}{g} = \frac{e\,(v_1^2 - v_1 u_1 \cot \phi)}{g}.$$

Then if h is greater than $\frac{m v_1^2}{2g}$, the pump will not commence to discharge unless speeded up to some velocity v_2 such that

$$\frac{m v_2^2}{2g} > \frac{e\,(v_1^2 - v_1 u_1 \cot \phi)}{g}.$$

After the discharge has been commenced, however, the speed may be diminished, and the pump will continue to deliver against the given head*.

For any given values of m and e the velocity v_2 at which delivery commences decreases with the angle ϕ. If ϕ is 90 or greater than 90 degrees, and m is unity, the pump will only commence to discharge against the normal head when the velocity is v_1, if the manometric efficiency e is less than 0·5. If ϕ is 30 degrees and m is unity, v_2 is equal to v_1 when e is 0·6, but if ϕ is 150 degrees v_2 is equal to v_1 when e is 0·428.

Nearly all actual pumps are run at such a speed that the centrifugal head at that speed is greater than the gross head against which the pump works, so that there is never any difficulty in starting the pump. This is accounted for (1) by the low manometric efficiencies of actual pumps, (2) by the angle ϕ never being greater than 90 degrees, and (3) by the wheels being surrounded by casings which allow the centrifugal head to be greater than $\frac{v_1^2}{2g}$.

It should be observed that it does not follow, because in many cases the manometric efficiency is small, the actual efficiency of the pump is of necessity low. (See Fig. 287.)

227. Head-velocity curve of a centrifugal pump at zero discharge.

For any centrifugal pump a curve showing the head against which it will start pumping at any given speed can easily be determined as follows.

On the delivery pipe fit a pressure gauge, and at the top

* See pages 438, 446 and 568.

of the suction pipe a vacuum gauge. Start the pump with the delivery valve closed, and observe the pressure on the two gauges for various speeds of the pump. Let p be the absolute pressure per sq. foot in the delivery pipe and p_1 the absolute pressure per sq. foot at the top of the suction pipe, then $\frac{p}{w} - \frac{p_1}{w}$ is the total centrifugal head h_c.

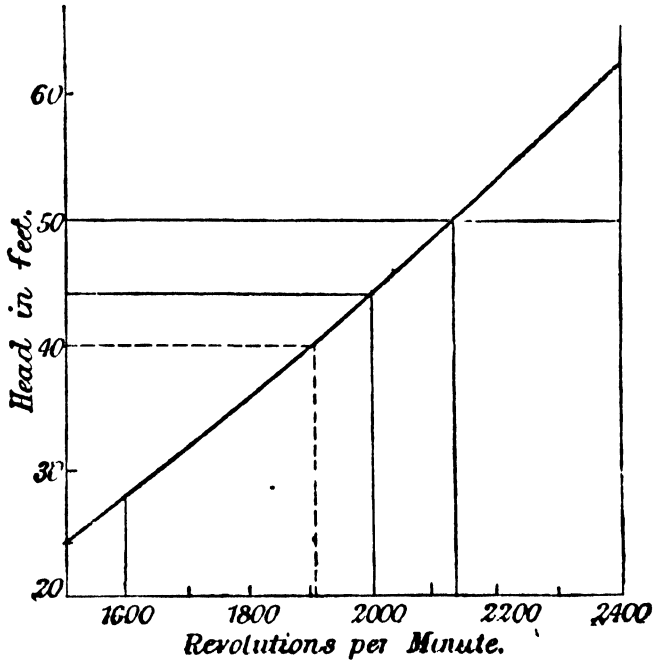

Fig. 285.

A curve may now be plotted similar to that shown in Fig. 285 which has been drawn from data obtained from the pump shown in Fig. 280.

When the head is 44 feet, the speed at which delivery would just start is 2000 revolutions per minute.

On reference to Fig. 293, which shows the discharge under different heads at various speeds, the discharge at 2000 revolutions per minute when the head is 44 feet is seen to be 12 cubic feet per minute. This means, that if the pump is to discharge against this head at this speed it cannot deliver less than 12 cubic feet per minute.

228. Variation of the discharge of a centrifugal pump with the head when the speed is kept constant*.

Head-discharge curve at constant velocity. If the speed of a centrifugal pump is kept constant and the head varied, the discharge varies as shown in Figs. 286A, 287, 289, and 292.

* See also page 445.

The curve No. 2, Fig. 286A, shows the variation of the head with discharge for the pump shown in Fig. 280 when running at 1950 revolutions per minute; and that of Fig. 287 was plotted from experimental data obtained by M. Rateau on a pump having a wheel 11·8 inches diameter.

The data for plotting the curve shown in Fig. 289* was obtained from a large centrifugal pump having a spiral chamber. In the case of the dotted curve the head is always less than the centrifugal head when the flow is zero, and the discharge against a given head has only one value.

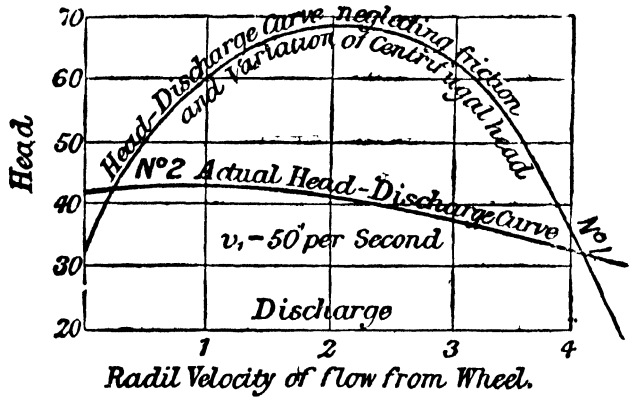

Fig. 286A Head-discharge curve for Centrifugal Pump. Velocity Constant.

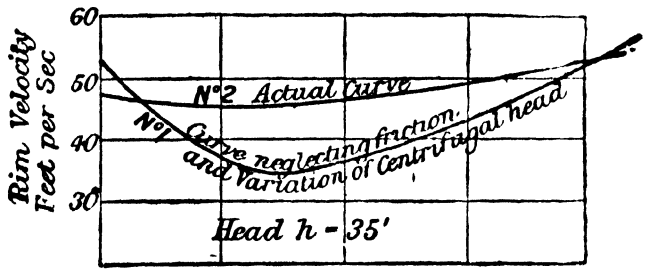

Fig. 286B. Velocity-discharge curve for Centrifugal Pump. Head Constant.

In Fig. 287 the discharge when the head is 80 feet may be either ·9 or 3·5 cubic feet per minute. The work required to drive the pump will be however very different at the two discharges, and, as shown by the curves of efficiency, the actual efficiencies for the two discharges are very different. At the given velocity therefore and at 80 feet head, the flow is ambiguous and is unstable, and may suddenly change from one value to the other, or it may actually cease, in which case the pump would not start again without the velocity v_1 being increased to 70·7 feet per second. This value is calculated from the equation

$$\frac{mv_1^2}{2g} = 80',$$

* *Proceedings Inst. Mech. Engs.*, 1903.

the coefficient m for this pump being 1·02. For the flow to be stable when delivering against a head of 80 feet, the pump should be run with a rim velocity greater than 70·7 feet per second, in which case the discharge cannot be less than $4\frac{1}{4}$ cubic feet per minute, as shown by the velocity-discharge curve of Fig. 287. The method of determining this curve is discussed later.

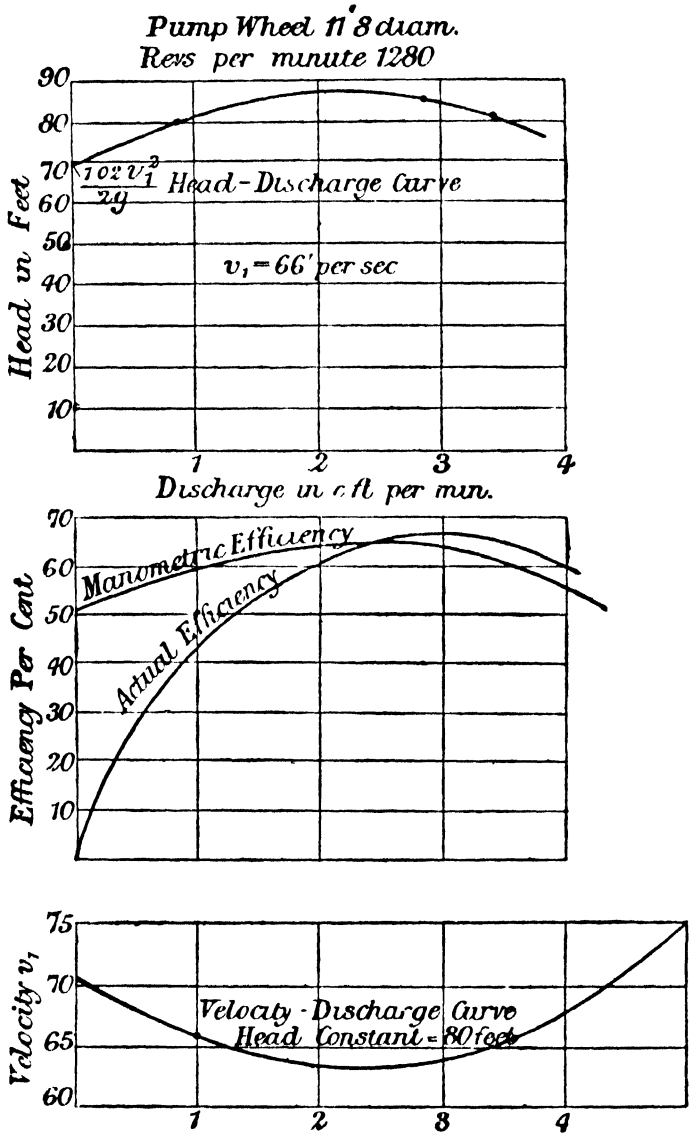

Fig. 287.

Example. A centrifugal pump, when discharging normally, has a peripheral velocity of 50 feet per second

The angle ϕ at exit is 30 degrees and the manometric efficiency is 60 per cent. The radial velocity of flow at exit is $2\sqrt{h}$.

Determine the lift h and the velocity of the wheel at which it will start delivery under full head.

$$h = 0\ 6\frac{Vv}{g},$$

$$V = 50 - (2\sqrt{h})\cos 130$$

$$= 50 - 1{\cdot}73\sqrt{h}.$$

Therefore $$h = 0{\cdot}6 \,.\, \frac{(50 - 1{\cdot}73\sqrt{h})\,50}{g},$$

from which $$h = 37 \text{ feet.}$$

Let v_2 be the velocity of the rim of the wheel at which pumping commences. Then assuming the centrifugal head, when there is no discharge, is

$$\frac{v_2^2}{2g} = 37,$$

$$v_2 = 48{\cdot}6 \text{ ft. per sec.}$$

229. Bernoulli's equations applied to centrifugal pumps. Consider the motion of the water in any passage between two consecutive vanes of a wheel. Let p be the pressure at inlet, p_1 at outlet and p_a the atmospheric pressure per sq. foot.

If the wheel is at rest and the water passes through it in the same way as it does when the wheel is in motion, and all losses are neglected, and the wheel is supposed to be horizontal, by Bernoulli's equations (see Fig. 277),

$$\frac{p_1}{w} + \frac{v_r^2}{2g} = \frac{p}{w} + \frac{V_r^2}{2g} \quad \text{.....(1).}$$

But since, due to the rotation, a centrifugal head

$$h_c = \frac{v_1^2}{2g} - \frac{v^2}{2g} \quad \text{.....(2)}$$

is impressed on the water between inlet and outlet, therefore,

$$\frac{p_1}{w} + \frac{v_r^2}{2g} = \frac{p}{w} + \frac{V_r^2}{2g} + \frac{v_1^2}{2g} - \frac{v^2}{2g} \quad \text{.....(3),}$$

or $$\frac{p_1}{w} - \frac{p}{w} = \frac{v_1^2}{2g} - \frac{v^2}{2g} + \frac{V_r^2}{2g} - \frac{v_r^2}{2g} \quad \text{.....(4).}$$

From (3) by substitution as on page 337,

$$\frac{p_1}{w} + \frac{U_1^2}{2g} = \frac{p}{w} + \frac{U^2}{2g} + \frac{V_1 v_1}{g} \pm \frac{Vv}{g} \quad \text{.....(5),}$$

and when U is radial and therefore equal to u,

$$\frac{p_1}{w} + \frac{U_1^2}{2g} = \frac{p}{w} + \frac{u^2}{2g} + \frac{V_1 v_1}{g} \quad \text{.....(6).}$$

If now the velocity U_1 is diminished gradually and without shock, so that the water leaves the delivery pipe with a velocity u_d, and if frictional losses be neglected, the height to which the water can be lifted above the centre of the pump is, by Bernoulli's equation,

$$h = \frac{p_1}{w} + \frac{U_1^2}{2g} - \frac{p_a}{w} - \frac{u_d^2}{2g} \quad \text{.....(7).}$$

If the centre of the wheel is h_0 feet above the level of the water in the sump or well, and the water in the well is at rest,

$$\frac{p_a}{w} = h_0 + \frac{p}{w} + \frac{u^2}{2g} \quad \text{.....(8).}$$

Substituting from (7) and (8) in (6)

$$\frac{V_1 v_1}{g} = h + h_0 + \frac{u_d^2}{2g}$$

$$= H_0 + \frac{u_d^2}{2g} = H \quad \ldots\ldots\ldots\ldots\ldots\ldots\ldots (9).$$

This result verifies the fundamental equation given on page 425.

Further from equation (6)

$$\frac{p_1}{w} + \frac{U_1^2}{2g} - \frac{p}{w} - \frac{u^2}{2g} = H_0 + \frac{u_d^2}{2g}.$$

Example. The centre of a centrifugal pump is 15 feet above the level of the water in the sump. The total lift is 60 feet and the velocity of discharge from the delivery pipe is 5 feet per second. The angle ϕ at discharge is 135 degrees, and the radial velocity of flow through the wheel is 5 feet per second. Assuming there are no losses, find the pressure head at the inlet and outlet circumferences.

At inlet $\quad \frac{p}{w} = 34' - 15' - \frac{5^2}{64}$

$= 18\ 6$ feet.

The radial velocity at outlet is

$$u_1 = 5 \text{ feet per second,}$$

and $\quad \frac{V_1 v_1}{g} = \frac{v_1^2 + u_1 v_1 \cot 45^\circ}{g} = 60' + \frac{25}{64},$

and therefore, $\quad v_1^2 + 5v_1 = 1940 \ldots \ldots\ldots\ldots\ldots\ldots\ldots\ldots\ldots (1),$

from which $\quad v_1 = 41{\cdot}6$ feet per second,

and $\quad V_1 = 46{\cdot}6$ „ „

Then $\quad \frac{U_1^2}{2g} = \frac{V_1^2 + u_1^2}{2g} = 34$ feet.

The pressure head at outlet is then

$$\frac{p_1}{w} = \frac{p_a}{w} + 45' - \frac{U_1^2}{2g}$$

$$= 45 \text{ feet.}$$

To find the velocity v_1 when ϕ is made 30 degrees.

$$\cot \phi = \sqrt{3},$$

therefore (1) becomes $\quad v_1^2 - 5\sqrt{3} \,.\, v_1 = 1940,$

from which $\quad v_1 = 48\ 6$ ft. per sec.

and $\quad V_1 = 40$ „ „

Then $\quad \frac{U_1^2}{2g} = 25\ 4$ feet, and $\frac{p_1}{w} = 53{\cdot}6$ feet.

230. Losses in centrifugal pumps.

The losses of head in a centrifugal pump are due to the same causes as the losses in a turbine.

Loss of head at exit. The velocity U_1 with which the water leaves the wheel is, however, usually much larger than in the case of the turbine, and as it is not an easy matter to diminish this velocity gradually, there is generally a much larger loss of velocity head at exit from the wheel in the pump than in the turbine.

In many of the earlier pumps, which had radial vanes at exit, the whole of the velocity head $\frac{U_1^2}{2g}$ was lost, no special precautions being taken to diminish it gradually and the efficiency was constantly very low, being less than 40 per cent.

The effect of the angle ϕ on the efficiency of the pump. To increase the efficiency Appold suggested that the blade should be set back, the angle ϕ being thus less than 90 degrees, Fig. 277.

Theoretically, the effect on the efficiency can be seen by considering the three cases considered in section 220 and illustrated in Fig. 282. When ϕ is 90 degrees $\frac{U_1^2}{2g}$ is ·54H, and when ϕ is 30 degrees $\frac{U_1^2}{2g}$ is ·36H. If, therefore, in these two cases this head is lost, while the other losses remain constant, the efficiency in the second case is 18 per cent. greater than in the first, and the efficiencies cannot be greater than 46 per cent. and 64 per cent. respectively.

In general when there is no precaution taken to utilise the energy of motion at the outlet of the wheel, the theoretical lift is

$$H_t = \frac{V_1 v_1}{g} - \frac{U_1^2}{2g} \quad \text{.....(1)},$$

and the maximum possible manometric efficiency is

$$e = 1 - \frac{U_1^2}{2V_1 v_1}.$$

Substituting for V_1, $v_1 - u_1 \cot\phi$, and for U_1^2, $V_1^2 + u_1^2$,

$$H_t = \frac{v_1^2}{2g} - \frac{u_1^2}{2g} \operatorname{cosec}^2\phi,$$

and

$$e = 1 - \frac{(v_1 - u_1 \cot\phi)^2 + u_1^2}{2(v_1^2 - v_1 u_1 \cot\phi)}$$

$$= \frac{v_1^2 - u_1^2 \operatorname{cosec}^2\phi}{2v_1(v_1 - u_1 \cot\phi)}.$$

When v_1 is 30 feet per second, u_1 5 feet per second and ϕ 30 degrees, e is 62·5 per cent. and when ϕ is 90 degrees e is 48·5 per cent.

Experiments also show that in ordinary pumps for a given lift and discharge the efficiency is greater the smaller the angle ϕ.

Parsons* found that when ϕ was 90 degrees the efficiency of a pump in which the wheel was surrounded by a circular casing was nearly 10 per cent. less than when the angle ϕ was made about 15 degrees.

* *Proceedings Inst. C. E.*, Vol. XLVII p. 272.

Stanton found that a pump 7 inches diameter having radial vanes at discharge had an efficiency of 8 per cent. less than when the angle ϕ at delivery was 30 degrees. In the first case the maximum actual efficiency was only 39·6 per cent., and in the second case 50 per cent.

It has been suggested by Dr Stanton that a second reason for the greater efficiency of the pump having vanes curved back at outlet is to be found in the fact that with these vanes the variation of the relative velocity of the water and the wheel is less than when the vanes are radial at outlet. It has been shown experimentally that when the section of a stream is diverging, that is the velocity is diminishing and the pressure increasing, there is a tendency for the stream lines to flow backwards towards the sections of least pressure. These return stream lines cause a loss of energy by eddy motions. Now in a pump, when the vanes are radial, there is a greater difference between the relative velocity of the water and the vane at inlet and outlet than when the angle ϕ is less than 90 degrees (see Fig. 282), and it is probable therefore that there is more loss by eddy motions in the wheel in the former case.

Loss of head at entry. To avoid loss of head at entry the vane must be parallel to the relative velocity of the water and the vane.

Unless guide blades are provided the exact direction in which the water approaches the edge of the vane is not known. If there were no friction between the water and the eye of the wheel it would be expected that the stream lines, which in the suction pipe are parallel to the sides of the pipe, would be simply turned to approach the vanes radially.

It has already been seen that when there is no flow the water in the eye of the wheel is made to rotate by friction, and it is probable that at all flows the water has some rotation in the eye of the wheel, but as the delivery increases the velocity of rotation probably diminishes. If the water has rotation in the same direction as the wheel, the angle of the vane at inlet will clearly have to be larger for no shock than if the flow is radial. That the water has rotation before it strikes the vanes seems to be indicated by the experiments of Mr Livens on a pump, the vanes of which were nearly radial at the inlet edge. (See section 236.) The efficiencies claimed for this pump are so high, that there could have been very little loss at inlet.

If the pump has to work under variable conditions and the water be assumed to enter the wheel at all discharges in the same direction, the relative velocity of the water and the edge of the

vane can only be parallel to the tip of the vane for one discharge, and at other discharges in order to make the water move along the vane a sudden velocity must be impressed upon it, which causes a loss of energy.

Let u_2, Fig. 288, be the velocity with which the water enters a wheel, and θ and v the inclination and velocity of the tip of the vane at inlet respectively.

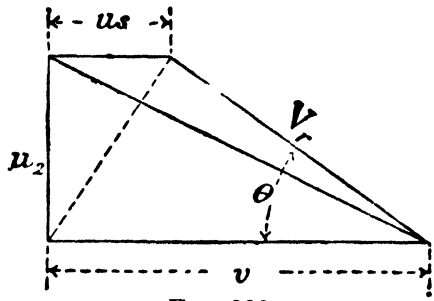

Fig. 288.

The relative velocity of u_2 and v is V_r', the vector difference of u_2 and v.

The radial component of flow through the opening of the wheel must be equal to the radial component of u_2, and therefore the relative velocity of the water along the tip of the vane is V_r.

If u_2 is assumed to be radial, a sudden velocity

$$u_s = v - u_2 \cot \theta$$

has thus to be given to the water.

If u_2 has a component in the direction of rotation u_s will be diminished.

It has been shown (page 67), on certain assumptions, that if a body of water changes its velocity from v_a to v_d suddenly, the head lost is $\frac{(v_a - v_d)^2}{2g}$, or is the head due to the change of velocity.

In this case the change of velocity is u_s, and the head lost may reasonably be taken as $\frac{ku_s^2}{2g}$. If k is assumed to be unity, the effective work done on the water by the wheel is diminished by

$$\frac{u_s^2}{2g} = \frac{(v - u_2 \cot \theta)^2}{2g}.$$

If now this loss takes place in addition to the velocity head being lost outside the wheel, and friction losses are neglected, then

$$\begin{aligned} h &= \frac{V_1 v_1}{g} - \frac{U_1^2}{2g} - \frac{(v - u_2 \cot \theta)^2}{2g} \\ &= \frac{v_1^2}{2g} - \frac{u_1^2}{2g} \operatorname{cosec}^2 \phi - \frac{(v - u_2 \cot \theta)^2}{2g} \\ &= \frac{v_1^2}{2g} - \frac{Q^2}{2gA_1^2} \operatorname{cosec}^2 \phi - \frac{\left(v - \frac{Q}{A} \cot \theta\right)^2}{2g} \\ &= \frac{v_1^2}{2g} - \frac{v^2}{2g} - \frac{u_1^2}{2g} \operatorname{cosec}^2 \phi + \frac{2vu_2 \cot \theta}{2g} - u_2^2 \frac{\cot^2 \theta}{2g} \quad \ldots\ldots(1). \end{aligned}$$

Example. The radial velocity of flow through a pump is 5 feet per second. The angle ϕ is 30 degrees and the angle θ is 15 degrees. The velocity of the outer circumference is 50 feet per sec. and the radius is twice that of the inner circumference.

Find the theoretical lift on the assumption that the whole of the kinetic energy is lost at exit.

$$h = \frac{v_1^2}{2g} - \frac{5^2}{2g}\operatorname{cosec}^2 30^\circ - \frac{(25 - 5\cot 15^\circ)^2}{2g}$$
$$= 37{\cdot}0 \text{ feet.}$$

The theoretical lift neglecting all losses is 64·2 feet, and the manometric efficiency is therefore 58 per cent.

231. Variation of the head with discharge and with the speed of a centrifugal pump.

It is of interest to study by means of equation (1), section 230, the variation of the discharge Q with the velocity of the pump when h is constant, and the variation of the head with the discharge when the velocity of the pump is constant, and to compare the results with the actual results obtained from experiment.

The full curve of Fig. 289 shows the variations of the head with the discharge when the velocity of a wheel is kept constant. The data for which the curve has been plotted is indicated in the figure.

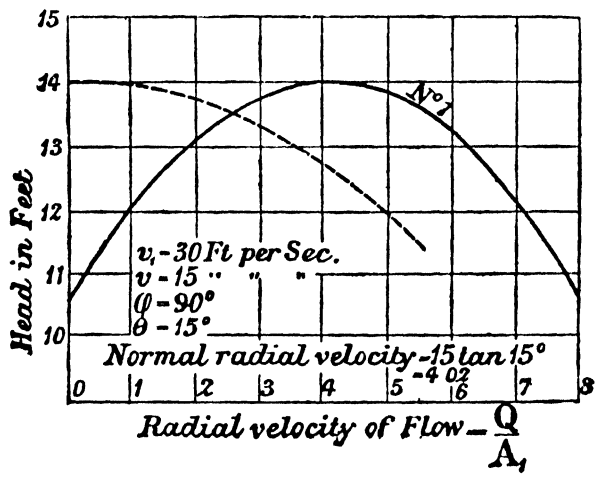

Fig. 289. Head-discharge curve at constant velocity.

When the discharge is zero

$$h_0 = \frac{v_1^2}{2g} - \frac{v^2}{2g} = 10{\cdot}5 \text{ feet.}$$

The velocity of flow $\frac{Q}{A_1}$ at outlet has been assumed equal to $\frac{Q}{A}$ at inlet.

Values of 1, 2, etc. were given to $\frac{Q}{A}$ and the corresponding values of h found from equation (1).

When the discharge is normal, that is, the water enters the wheel without shock, $\frac{Q}{A}$ is 4 feet and h is 14 feet. The theoretical head assuming no losses is then 28 feet and the manometric efficiency is thus 50 per cent. For less or greater values of $\frac{Q}{A}$ the head diminishes and also the efficiency.

The curve of Fig. 290 shows how the flow varies with the velocity for a constant value of h, which is taken as 12 feet.

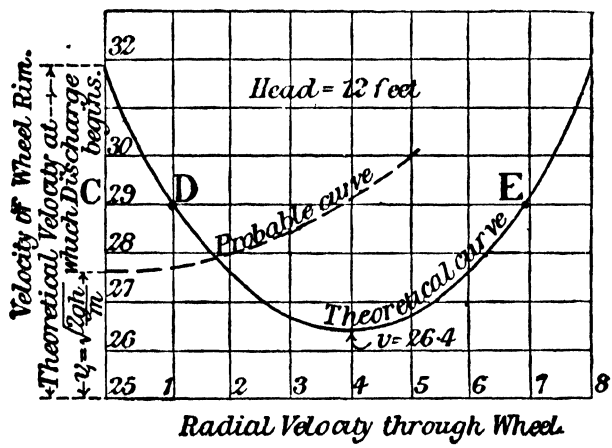

Fig. 290. Velocity-discharge curve at constant head for Centrifugal Pump.

It will be seen that when the velocity v_1 is 31·9 feet per second the velocity of discharge may be either zero or 8·2 feet per second. This means that if the head is 12 feet, the pump, theoretically, will only start when the velocity is 31·9 feet per second and the velocity of discharge will suddenly become 8·2 feet per second. If now the velocity v_1 is diminished the pump still continues to discharge, and will do so as long as v_1 is greater than 26·4 feet per second. The flow is however unstable, as at any velocity v_0 it may suddenly change from CE to CD, or it may suddenly cease, and it will not start again until v_1 is increased to 31·9 feet per second.

232. The effect of the variation of the centrifugal head and the loss by friction on the discharge of a pump.

If then the losses at inlet and outlet were as above and were the only losses, and the centrifugal head in an actual pump was equal to the theoretical centrifugal head, the pump could not be made to deliver water against the normal head at a small velocity of discharge. In the case of the pump considered in section 231, it could not safely be run with a rim velocity less than 31·9 ft. per sec., and at any greater velocity the radial velocity of flow could not be less than 8 feet per second.

In actual pumps, however, it has been seen that the centrifugal head at commencement is greater than

$$\frac{v_1^2}{2g} - \frac{v^2}{2g}.$$

There is also loss of head, which at high velocities and in small pumps is considerable, due to friction. These two causes considerably modify the head-discharge curve at constant velocity and the velocity-discharge curve at constant head, and the centrifugal head at the normal speed of the pump when the discharge is zero, is generally greater than any head under which the pump works, and many actual pumps can deliver variable quantities of water against the head for which they are designed.

The centrifugal head when the flow is zero is

$$\frac{mv_1^2}{2g},$$

m being generally equal to, or greater than unity. As the flow increases, the velocity of whirl in the eye of the wheel and in the casing will diminish and the centrifugal head will therefore diminish.

Let it be assumed that when the velocity of flow is u (supposed constant) the centrifugal head is

$$h_c = \frac{v_1^2}{2g} - \frac{v^2}{2g} + \frac{(kv - nu)^2}{2g},$$

k and n being constants which must be determined by experiment.

When u is zero

$$\frac{v_1^2}{2g} - \frac{v^2}{2g} + \frac{k^2v^2}{2g} = \frac{mv_1^2}{2g},$$

and if m is known k can at once be found.

Let it further be assumed that the loss by friction* and eddy motions, apart from the loss at inlet and outlet is $\frac{c^2u^2}{2g}$.

* The loss of head by friction will no doubt depend not only upon u but also upon the velocity v_1 of the wheel, and should be written as

$$\frac{Cu^2}{2g} + \frac{C_1v_1^2}{2g} + \text{etc.},$$

or, as

$$\frac{Cu^2}{2g} + \frac{C_2uv_1}{2g} + \ldots \text{ etc.}$$

If it be supposed it can be expressed by the latter, then the correction

$$\frac{k^2v^2}{2g} - \frac{2nku_1v_1}{2g} - \frac{k_1u^2}{2g},$$

if proper values are given to k, n_1 and k_1, takes into account the variation of the centrifugal head and also the friction head v_1.

The gross head h is then,

$$h = \frac{v_1^2}{2g} - \frac{v^2}{2g} - \frac{u^2}{2g}\operatorname{cosec}^2\phi + \frac{2vu\cot\theta}{2g} - u^2\cot^2\theta + \frac{(kv_1 - nu)^2}{2g} - \frac{c^2u^2}{2g} \quad \ldots\ldots\ldots\ldots\ldots (2).$$

If now the head h and flow Q be determined experimentally, the difference between h as determined from equation (1), page 444, and the experimental value of h, must be equal to

$$\frac{(kv_1 - nu)^2}{2g} - \frac{c^2u^2}{2g} = \frac{k^2v_1^2}{2g} - \frac{2nkuv_1}{2g} + \frac{u^2}{2g}(n^2 - c^2)$$

$$= \frac{k^2v_1^2}{2g} - \frac{2nkuv_1}{2g} - \frac{k_1u^2}{2g},$$

k_1 being equal to $(c^2 - n^2)$.

The coefficient k being known from an experiment when u is zero, for many pumps two other* experiments giving corresponding values of h and u will determine the coefficients n and k_1.

The head-discharge curve at constant velocity, for a pump such as the one already considered, would approximate to the dotted curve of Fig. 289. This curve has been plotted from equation (2), by taking k as 0·5, n as 7·64 and k_1 as -38.

Substituting values for k, n, k_1, cosec ϕ and cot ϕ, equation (2) becomes

$$h = \frac{mv_1^2}{2g} + \frac{Cu\,.\,v}{2g} + \frac{C_1u^2}{2g} \quad \ldots\ldots\ldots\ldots\ldots\ldots\ldots (3),$$

C and C_1 being new coefficients; or it may be written

$$h = \frac{mv_1^2}{2g} + \frac{C_2Qv}{2g} + \frac{C_3Q^2}{2g} \quad \ldots\ldots\ldots\ldots\ldots\ldots\ldots (4),$$

Q being the flow in any desired units, the coefficients C_2 and C_3 varying with the units. If *equation (4) is of the correct form, three experiments will determine the constants m, C_2 and C_3 directly, and having given values to any two of the three variables h, v, and Q the third can be found.

233. The effect of the diminution of the centrifugal head and the increase of the friction head as the flow increases, on the velocity-discharge curve at constant head.

Using the corrected equation (2), section 232, and the given values of k, n_1 and k_1 the dotted curve of Fig. 290 has been plotted.

From the dotted curve of Fig. 289 it is seen that u cannot be greater than 5 feet when the head is 12 feet, and therefore the new curve of Fig. 290 is only drawn to the point where u is 5.

The pump starts delivering when v is 27·7 feet per second and the discharge increases gradually as the velocity increases.

* See page 570.

The pump will deliver, therefore, water under a head of 12 feet at any velocity of flow from zero to 5 feet per second.

In such a pump the manometric efficiency must have its maximum value when the discharge is zero and it cannot be greater than

$$\frac{\dfrac{mv^2}{2g}}{\dfrac{v_1^2 - v_1u_1 \cot\theta}{g}}.$$

This is the case with many existing pumps and it explains why, when running at constant speed, they can be made to give any discharge varying from zero to a maximum, as the head is diminished.

234. Special arrangements for converting the velocity head $\frac{U^2}{2g}$ with which the water leaves the wheel into pressure head.

The methods for converting the velocity head with which the water leaves the wheel into pressure head have been indicated on page 421. They are now discussed in greater detail.

Thomson's vortex or whirlpool chamber. Professor James Thomson first suggested that the wheel should be surrounded by a chamber in which the velocity of the water should gradually change from U_1 to u_d the velocity of flow in the pipe. Such a chamber is shown in Fig. 279. In this chamber the water forms a free vortex, so called because no impulse is given to the water while moving in the chamber.

Any fluid particle *ab*, Fig. 284, may be considered as moving in a circle of radius r_0 with a velocity v_0 and to have also a radial velocity u outwards.

Let it be supposed the chamber is horizontal.

If W is the weight of the element in pounds, its momentum perpendicular to the radius is $\frac{Wv_0}{g}$ and the moment of momentum or angular momentum about the centre C is $\frac{Wv_0r}{g}$.

For the momentum of a body to change, a force must act upon it, and for the moment of momentum to change, a couple must act upon the body.

But since no turning effort, or couple, acts upon the element after leaving the wheel its moment of momentum must be constant.

Therefore, $$\frac{W v_0 r_0}{g}$$

is constant or $$v_0 r_0 = \text{constant.}$$

If the sides of the chamber are parallel the peripheral area of the concentric rings is proportional to r_0, and the radial velocity of flow u for any ring will be inversely proportional to r_0, and therefore, the ratio $\frac{u}{v_0}$ is constant, or the direction of motion of any element with its radius r_0 is constant, and the stream lines are equiangular spirals.

If no energy is lost, by friction and eddies, Bernoulli's theorem will hold, and, therefore, when the chamber is horizontal

$$\frac{u^2}{2g} + \frac{v_0^2}{2g} + \frac{p_0}{w}$$

is constant for the stream lines.

This is a general property of the free vortex.

If u is constant

$$\frac{v_0^2}{2g} + \frac{p_0}{w} = \text{constant.}$$

Let the outer radius of the whirlpool chamber be R_w and the inner radius r_w. Let v_{r_w} and v_{R_w} be the whirling velocities at the inner and outer radii respectively.

Then since $v_0 r_0$ is a constant,

and $$\frac{p_0}{w} + \frac{v_0^2}{2g} = \text{constant,}$$

$$\frac{p_{R_w}}{w} = \frac{p_{r_w}}{w} + \frac{v_{r_w}^2}{2g} - \frac{v_{R_w}^2}{2g}$$

$$= \frac{p_{r_w}}{w} + \frac{v_{r_w}^2}{2g}\left(1 - \frac{r_w^2}{R_w^2}\right).$$

When $$R_w = 2r_w,$$

$$\frac{p_{R_w}}{w} = \frac{p_{r_w}}{w} + \frac{3}{4} \cdot \frac{v_{r_w}^2}{2g}.$$

If the velocity head which the water possesses when it leaves the vortex chamber is supposed to be lost, and h_1 is the head of water above the pump and p_a the atmospheric pressure, then neglecting friction

$$\frac{p_{R_w}}{w} = h_1 + \frac{u_d^2}{2g} + \frac{p_a}{w}.$$

or $$h_1 = \frac{p_{R_w}}{w} - \frac{u_d^2}{2g} - \frac{p_a}{w}.$$

If then h_0 is the height of the pump above the well, the total lift h_2 is $h_1 + h_0$.

Therefore,

$$h_2 = h_0 + \frac{p_{rw}}{w} + \frac{v_{rw}^2}{2g}\left(1 - \frac{r_w^2}{R_w^2}\right) - \frac{u_d^2}{2g} - \frac{p_a}{w}.$$

But $$h_0 = \frac{p_a}{w} - \frac{p}{w} - \frac{u^2}{2g},$$

also $$p_{rw} = p_1,\ r_w = R, \text{ and } v_{rw} = V_1.$$

Therefore

$$h_2 = \frac{p_1}{w} - \frac{p}{w} - \frac{u^2}{2g} + \frac{V_1^2}{2g}\left(1 - \frac{R^2}{R_w^2}\right) - \frac{u_d^2}{2g}.$$

But from equation (6) page 413,

$$\frac{p_1}{w} - \frac{p}{w} - \frac{u^2}{2g} = \frac{V_1 v_1}{g} - \frac{U_1^2}{2g}.$$

Therefore

$$h_2 + \frac{u_d^2}{2g} = \frac{V_1 v_1}{g} - \frac{U_1^2}{2g} + \frac{V_1^2}{2g}\left(1 - \frac{R^2}{R_w^2}\right).$$

This might have been written down at once from equation (1), section 230. For clearly if there is a gain of pressure head in the vortex chamber of $\frac{V_1^2}{2g}\left(1 - \frac{R^2}{R_w^2}\right)$, the velocity head to be lost will be less by this amount than when there is no vortex chamber.

Substituting for V_1 and U_1 the theoretical lift h is now

$$h = \frac{v_1^2 - v_1 u_1 \cot\phi}{g} - \frac{u_1^2}{2g} - \frac{(v_1 - u_1 \cot\phi)^2}{2g}\frac{R^2}{R_w^2} \quad \text{.....(1).}$$

When the discharge or rim velocity is not normal, there is a further loss of head at entrance equal to

$$\frac{\left(v - \frac{Q}{A}\cot\theta\right)^2}{g},$$

and

$$h = \frac{v_1^2 - v_1 \frac{Q}{A_1}\cot\phi}{g} - \frac{Q^2}{2gA_1^2} - \frac{\left(v_1 - \frac{Q}{A_1}\cot\phi\right)^2}{2g}\frac{R^2}{R_w^2} - \frac{\left(v - \frac{Q}{A}\cot\theta\right)^2}{2g} \quad \text{.....(2).}$$

When there is no discharge v_{rw} is equal to v_1 and

$$h = \frac{v_1^2}{g} - \frac{v_1^2 R^2}{2gR_w^2} - \frac{v^2}{2g}.$$

If $$R = \tfrac{1}{2}R_w \text{ and } v = \tfrac{1}{2}v_1,$$

$$h = \frac{3}{2} \cdot \frac{v_1^2}{2g}.$$

Correcting equation (1) in order to allow for the variation of the centrifugal head with the discharge, and the friction losses,

$$h = \frac{v_1^2 - v_1 u_1 \cot \phi}{g} - \frac{u_1^2}{2g} - \frac{(v_1 - u_1 \cot \phi)^2 R^2}{2g R_w^2}$$
$$- \frac{(v - u \cot \theta)^2}{2g} + \frac{k^2 v^2}{2g} - \frac{2nkuv_1}{2g} - \frac{k_1 u^2}{2g},$$

which reduces to $$h = \frac{mv_1^2}{2g} + \frac{C_2 Q v}{2g} + \frac{C_3 Q^2}{2g}.$$

The experimental data on the value of the vortex chamber *per se*, in increasing the efficiency is very limited.

Stanton* showed that for a pump having a rotor 7 inches diameter surrounded by a parallel sided vortex chamber 18 inches diameter, the efficiency of the chamber in converting velocity head to pressure head was about 40 per cent. It is however questionable whether the design of the pump was such as to give the best results possible.

So far as the author is aware, centrifugal pumps with vortex chambers are not now being manufactured in England, but it seems very probable that by the addition of a well-designed chamber small centrifugal pumps might have their efficiencies considerably increased.

235. Turbine pumps.

Another method, first suggested by Professor Reynolds, and now largely used, for diminishing the velocity of discharge U_1 gradually, is to discharge the water from the wheel into guide passages the sectional area of which should gradually increase from the wheel outwards, Fig. 280, and the tangents to the tips of the guide blades should be made parallel to the direction of U_1.

The number of guide passages in small pumps is generally four or five.

If the guide blades are fixed as in Fig. 280, the direction of the tips can only be correct for one discharge of the pump, but except for large pumps, the very large increase in initial cost of the pump, if adjustable guide blades were used, as well as the mechanical difficulties, would militate against their adoption.

Single wheel pumps of this type can be used up to a head of 100 feet with excellent results, efficiencies as high as 85 per cent.

* *Proceedings Inst. C.E.*, 1903. See also page 568.

having been claimed. They are now being used to deliver wate against heads of over 350 feet, and M. Rateau has used a singl wheel 3·16 inches diameter running at 18,000 revolutions pe minute to deliver against a head of 936 feet.

Loss of head at the entrance to the guide passages. If th guide blades are fixed, the direction of the tips can only be correc for one discharge of the pump. For any other discharge than th normal, the direction of the water as it leaves the wheel is no parallel to the fixed guide and there is a loss of head due t shock.

Let α be the inclination of the guide blade and ϕ the van angle at exit.

Let u_1 be the radial velocity of flow. Then BE, Fig. 291, is the velocity with which the water leaves the wheel.

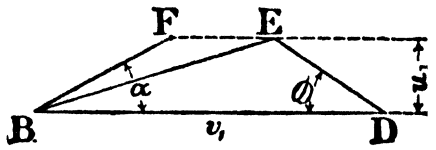

Fig. 291.

The radial velocity with which the water enters the guide passages must be u_1 and the velocit along the guide is, therefore, BF.

There is a sudden change of velocity from BE to BF, and o the assumption that the loss of head is equal to the head due to th relative velocity FE, the head lost is

$$\frac{(v_1 - u_1 \cot\phi - u_1 \cot\alpha)^2}{2g}.$$

At inlet the loss of head is

$$\frac{(v - u \cot\theta)^2}{2g},$$

and the theoretical lift is

$$h = \frac{v_1^2 - v_1 u_1 \cot\phi}{g} - \frac{(v - u\cot\theta)^2}{2g} - \frac{(v_1 - u_1\cot\phi - u_1\cot\alpha)^2}{2g}$$

$$= \frac{v_1^2}{2g} - \frac{v^2}{2g} + \frac{2v_1u_1\cot\alpha}{2g} + \frac{2vu\cot\theta}{2g}$$

$$- \frac{u_1^2(\cot\phi + \cot\alpha)^2}{2g} - \frac{u^2\cot^2\theta}{2g} \quad \text{.....(1).}$$

To correct for the diminution of the centrifugal head and t allow for friction,

$$\frac{k^2v^2}{2g} - \frac{2kv_1n\,.\,u_1}{2g} - k_1\frac{u_1^2}{2g},$$

must be added, and the lift is then

$$h = \frac{v_1^2}{2g} - \frac{v^2}{2g} + \frac{2v_1u_1\cot\alpha}{2g} + \frac{2vu\cot\theta}{2g} - \frac{u_1^2(\cot\phi + \cot\alpha)^2}{2g}$$

$$- \frac{u^2\cot^2\theta}{2g} + \frac{k^2v^2}{2g} - \frac{2knv_1u_1}{2g} - \frac{k_1u_1^2}{2g},$$

which, since u can always be written as a multiple of u_1, reduces to the form

$$2gh = mv_1^2 + Cu_1v_1 + C_1u_1^2 \quad \text{.....(2).}$$

Equations for the turbine pump shown in Fig. 280. *Characteristic curves.* Taking the data

$$\theta = 5 \text{ degrees}, \quad \cot\theta = 11{\cdot}43$$
$$\phi = 30 \quad \text{,,} \quad \cot\phi = 1{\cdot}732$$
$$\alpha = 3 \quad \text{,,} \quad \cot\alpha = 19{\cdot}6$$
$$D = 2{\cdot}5d$$

equation (2) above becomes

$$2gh = {\cdot}84v_1^2 + 48{\cdot}3u_1v_1 - 587u_1^2 \quad \text{.....(3)}$$

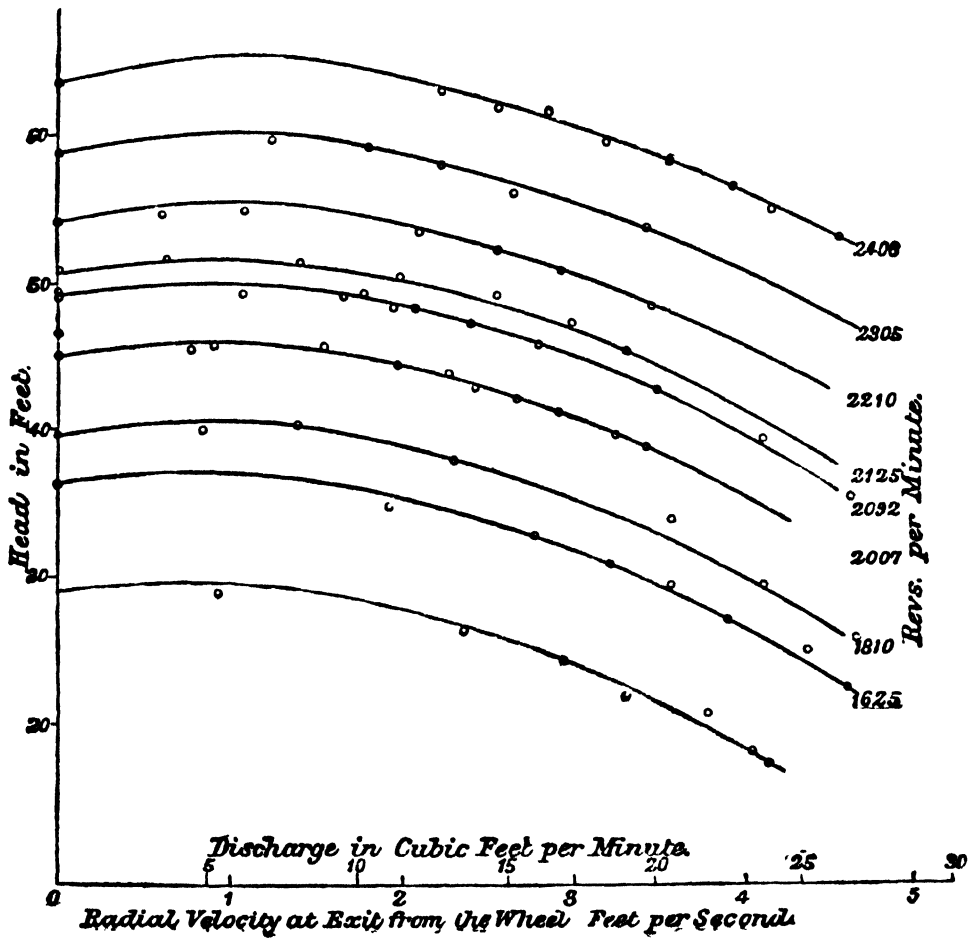

Fig. 292. Head-discharge curves at constant speed for Turbine Pump.

From equation (3) taking v_1 as 50 feet per second, the head-discharge curve No. 1, of Fig. 286A, has been drawn, and taking h as 35 feet, the velocity-discharge curve No. 1, of Fig. 286B, has been plotted.

In Figs. 292—4 are shown a series of head-discharge curves at

constant speed, velocity-discharge curves at constant head, and head-velocity curves at constant discharge, respectively.

The points shown near to the curves were determined experimentally, and the curves, it will be seen, are practically the mean curves drawn through the experimental points. They were however plotted in all cases from the equation

$$2gh = 1{\cdot}087v_1^2 + 2{\cdot}26u_1v_1 - 62{\cdot}1u_1^2,$$

obtained by substituting for m, C and C_1 in equation (2) the values 1·087, 2·26 and −62·1 respectively. The value of m was obtained by determining the head h, when the stop valve was closed, for speeds between 1500 and 2500 revolutions per minute, Fig. 285. The values of C and C_1 were first obtained, approximately, by taking two values of u_1 and v_1 respectively from one of the actual velocity-discharge curves near the middle of the series, for which h was known, and from the two quadratic equations thus obtained C and C_1 were calculated. By trial C and C_1 were then corrected to make the equation more nearly fit the remaining curves.

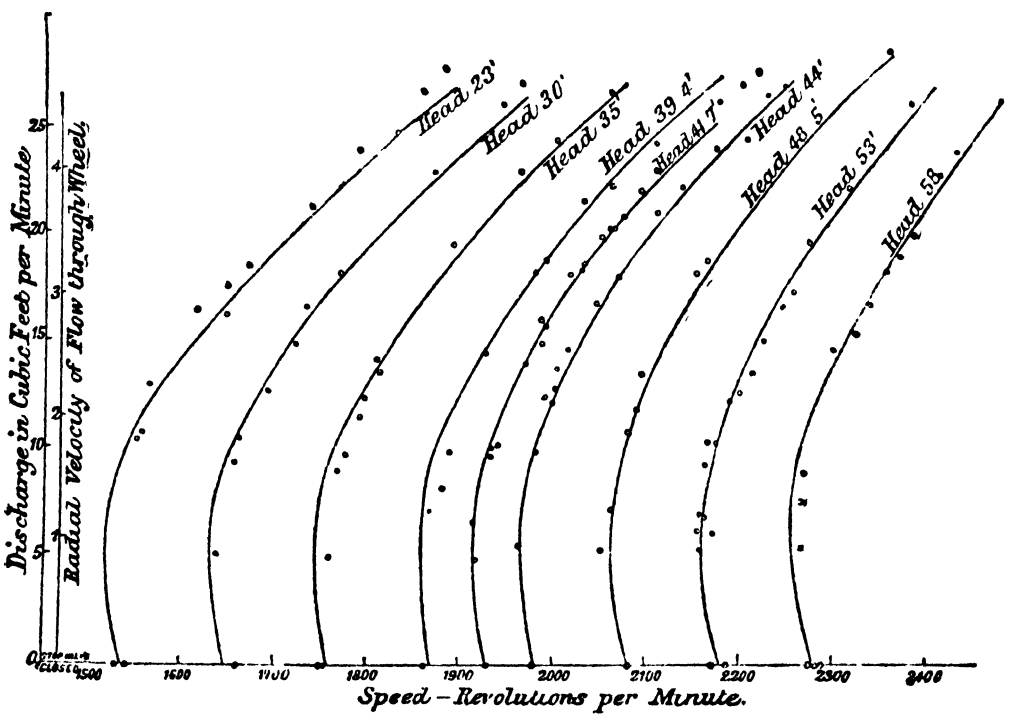

Fig. 293. Velocity-Discharge curves at Constant Head.

No attempt has been made to draw the actual mean curves in the figures, as in most cases the difference between them and the calculated curves drawn, could hardly be distinguished. The reader can observe for himself what discrepancies there are between the mean curves through the points and the calculated curves. It

will be seen that for a very wide range of speed, head, and discharge, the agreement between the curves and the observed points is very close, and the equation can therefore be used with confidence for this particular pump to determine its performance under stated conditions.

It is interesting to note, that the experiments clearly indicated the unstable condition of the discharge when the head was kept constant and the velocity was diminished below that at which the discharge commenced.

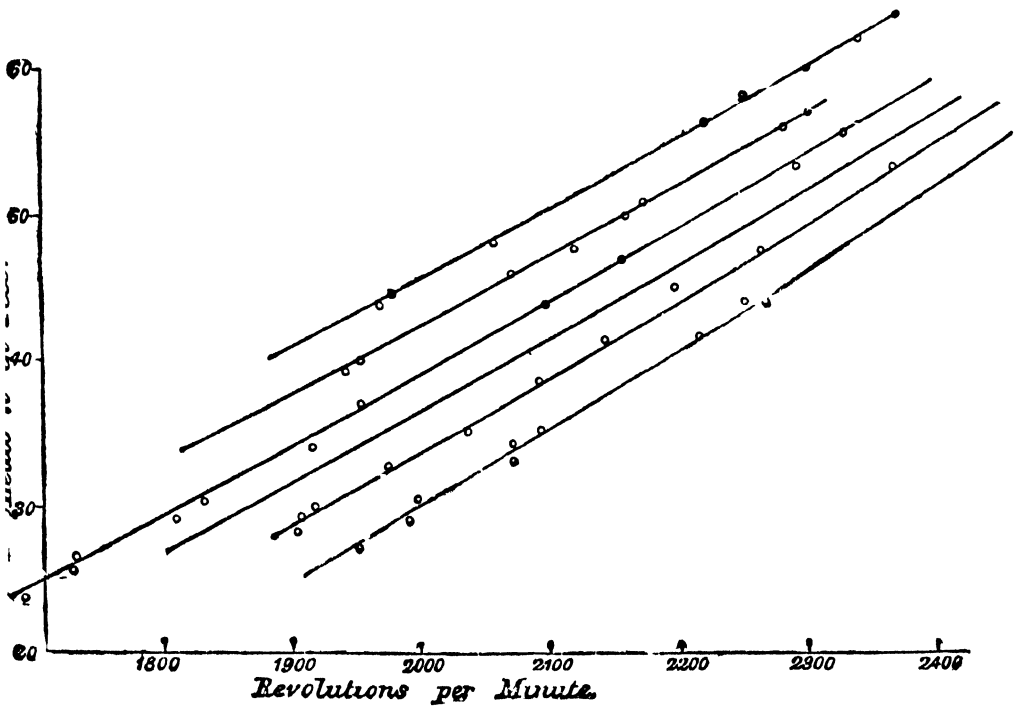

Fig. 294. Head-velocity curves at Constant Discharge.

236. Losses in the spiral casings of centrifugal pumps.

The spiral case allows the mean velocity of flow toward the discharge pipe to be fairly constant and the results of experiment seem to show that a large percentage of the velocity of the water at the outlet of the wheel is converted into pressure head. Mr Livens* obtained, for a pump having a wheel $19\frac{1}{2}$ inches diameter running at 550 revolutions per minute, an efficiency of 71 per cent. when delivering 1600 gallons per minute against a head of 25 feet. The angle ϕ was about 13 degrees and the mean of the angle θ for the two sides of the vane 81 degrees.

For a similar pump $21\frac{5}{8}$ inches diameter an efficiency of 82 per cent. was claimed.

* *Proceedings Inst. Mech. Engs.*, 1903.

The *author finds the equation to the head-discharge curve for the $19\frac{1}{2}$ inches diameter pump from Mr Livens' data to be

$$1{\cdot}18v_1^2 + 3u_1v_1 - 142u_1^2 = 2gh \quad \ldots\ldots\ldots \quad \ldots(1),$$

and for the $21\frac{5}{8}$ inches diameter pump

$$1{\cdot}18v_1^2 - 4{\cdot}5u_1v_1 = 2gh \quad \ldots\ldots\ldots\ldots \quad \ldots\ldots (2).$$

The velocity of rotation of the water round the wheel will be less than the velocity with which the water leaves the wheel and there will be a loss of head due to the sudden change in velocity. Let this loss of head be written $\frac{k_3U_1^2}{2g}$. The head, when u_1 is the radial velocity of flow at exit and assuming the water enters the wheel radially, is then

$$h = \frac{v_1^2 - v_1u_1\cot\phi}{g} - \frac{k_3U_1^2}{2g} - \frac{(v - u\cot\theta)^2}{2g}.$$

Allowing for friction and diminution of centrifugal head,

$$h = \frac{v_1^2 - v_1u_1\cot\phi}{g} - \frac{k_3U_1^2}{2g} - \frac{(v - u\cot\theta)^2}{2g} + \frac{kv_1^2}{2g} - \frac{nku_1v_1}{2g} - \frac{k_1u^2}{2g},$$

which again may be written $h = \frac{mv_1^2}{2g} + \frac{Cu_1v_1}{2g} + \frac{C_1u_1^2}{2g}$.

The values of m, C and C_1 are given for two pumps in (1) and (2).

237. General equation for a centrifugal pump.

The equations for the gross head h at discharge Q as determined for the several classes of pumps, $h = \frac{mv_1^2}{2g} + \frac{C_2Qv}{2g} + \frac{C_3Q^2}{2g}$, or, if u is the velocity of flow, $h = \frac{mv_1^2}{2g} + \frac{Cuv}{2g} + \frac{C_1u^2}{2g}$, in which m varies between 1 and 1·5. The coefficients C_2 and C_3 for any pump will depend upon the unit of discharge.

As a further example and illustrating the case in which at certain speeds the flow may be unstable, the curves of Fig. 287 may be now considered. When v_1 is 66 feet per second the equation to the head discharge curve is

$$h = \frac{1{\cdot}02v_1^2}{2g} + \frac{15{\cdot}5Qv_1}{2g} - \frac{236Q^2}{2g},$$

Q being in cubic feet per minute.

The velocity-discharge curve for a constant head of 80 feet as calculated from this equation is shown in Fig. 287.

To start the pump against a head of 80 feet the peripheral velocity has to be 70·7 feet per second, at which velocity the discharge Q suddenly rises to 4·3 cubic feet per minute. The curves

* See Appendix, page 568.

of actual and manometric efficiency are shown in Fig. 287, the maximum for the two cases occurring at different discharges.

237A. Characteristic curves*.

From tests on a centrifugal pump efficiency and power curves can be plotted exactly as for turbines, see Figs. 270A—270B. The theory of similar turbines, pages 386—7, is exactly applicable to centrifugal pumps. Curves similar to those of Figs. 271—272B can be plotted for a pump and used to anticipate the performance of a pump under varying conditions, or of a pump of similar form.

238. The limiting height to which a single wheel centrifugal pump can be used to raise water.

The maximum height to which a centrifugal pump can raise water, depends theoretically upon the maximum velocity at which the rim of the wheel can be run. It has already been stated that rim velocities up to 250 feet per second have been used. Assuming radial vanes and a manometric efficiency of 50 per cent., a pump running at this velocity would lift against a head of 980 feet.

At these very high velocities, however, the wheel must be of some material such as bronze or cast steel, having considerable resistance to tensile stresses, and special precautions must be taken to balance the wheel. The hydraulic losses are also considerable, and manometric efficiencies greater than 50 per cent. are hardly to be expected. According to M. Rateau†, the limiting head against which it is advisable to raise water by means of a single wheel is about 100 feet, and the maximum desirable velocity of the rim of the wheel is about 100 feet per second.

Single wheel pumps to lift up to 350 feet are however being used. At this velocity the stress in a hoop due to centrifugal forces is about 7250 lbs. per sq. inch‡.

239. The suction of a centrifugal pump.

The greatest height through which a centrifugal or other class of pump will draw water is about 27 feet. Special precaution has to be taken to ensure that all joints on the suction pipe are perfectly air-tight, and especially is this so when the suction head is greater than 15 feet; only under special circumstances is it therefore desirable for the suction head to be greater than this amount, and it is always advisable to keep the suction head as small as possible.

* See also page 454.

† "Pompes Centrifuges," etc, *Bulletin de la Société de l'Industrie minérale*, 1902; *Engineer*, p. 236, March, 1902.

‡ See Ewing's *Strength of Materials*; Wood's *Strength of Structural Members*; *The Steam Turbine* Stodola.

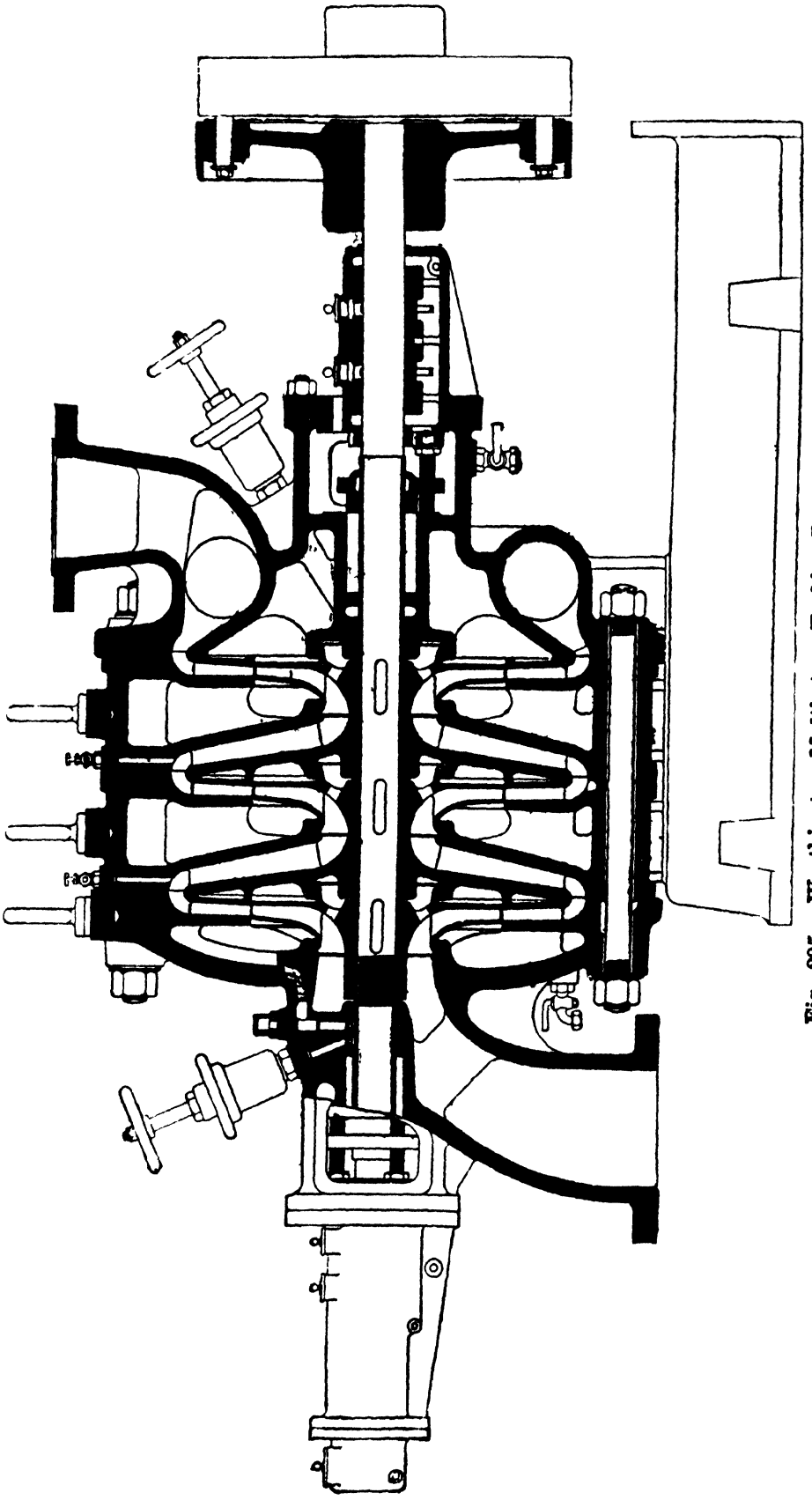

Fig. 295. Worthington Multi-stage Turbine Pump.

240. Series or multi-stage turbine pumps.

It has been stated that the limiting economical head for a single wheel pump is about 100 feet, and for high heads series pumps are now generally used.

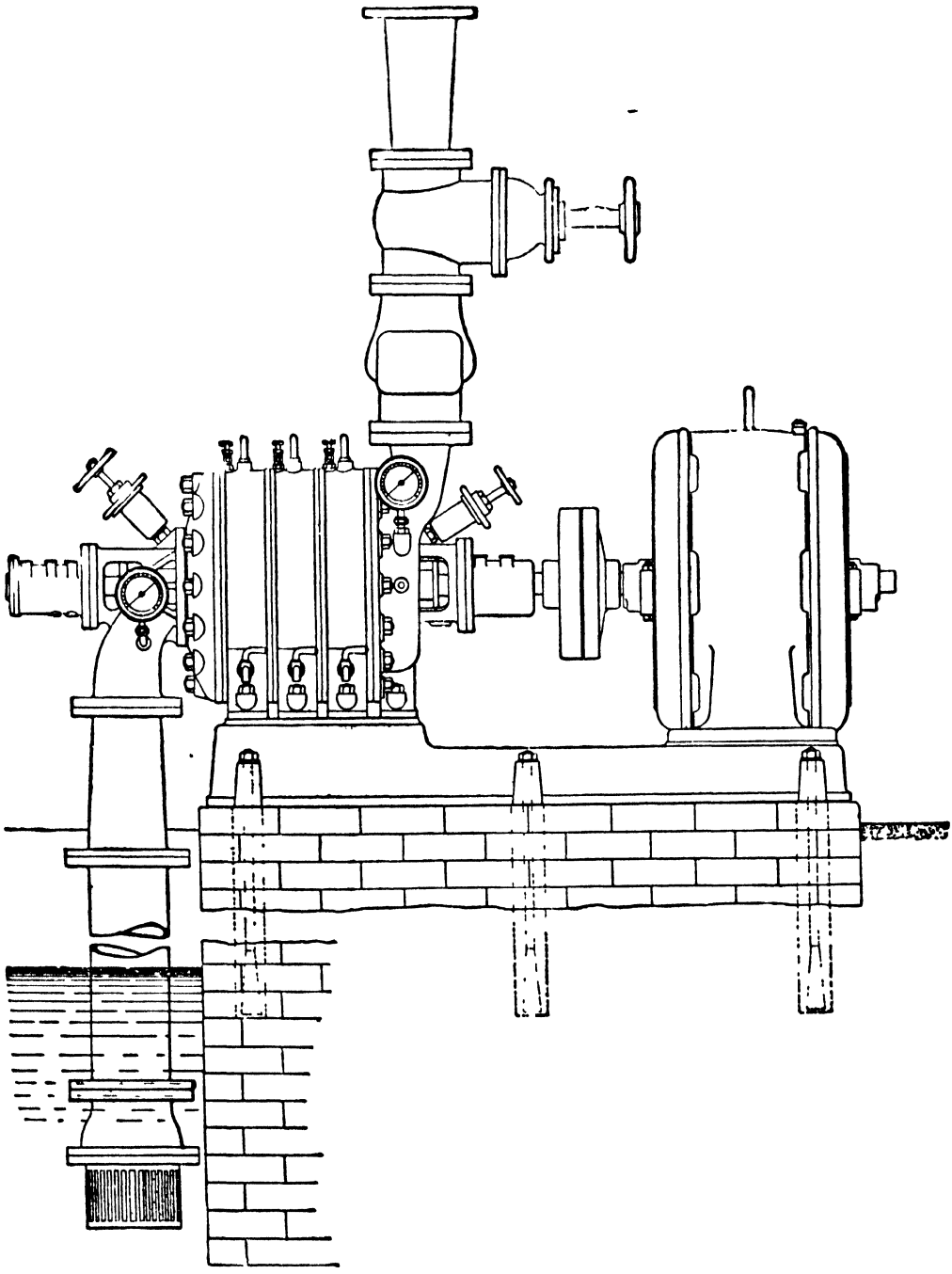

Fig. 296. General Arrangement of Worthington Multi-stage Turbine Pump.

By putting several wheels or rotors in series on one shaft, each rotor giving a head varying from 100 to 200 feet, water can be lifted to practically any height, and such pumps have been

constructed to work against a head of 2000 feet. The number of rotors, on one shaft, may be from one to twelve according to the total head. For a given head, the greater the number of rotors used, the less the peripheral velocity, and within certain limits the greater the efficiency.

Figs. 295 and 296 show a longitudinal section and general arrangement, respectively, of a series, or multi-stage pump, as constructed by the Worthington Pump Company. On the motor shaft are fixed three phosphor-bronze rotors, alternating with fixed guides, which are rigidly connected to the outer casing, and to the bearings. The water is drawn in through the pipe at the left of the pump and enters the first wheel axially. The water leaves the first wheel at the outer circumference and passes along an expanding passage in which the velocity is gradually diminished and enters the second wheel axially. The vanes in the passage are of hard phosphor-bronze made very smooth to reduce friction losses to a minimum. The water passes through the remaining rotors and guides in a similar manner and is finally discharged into the casing and thence into the delivery pipe.

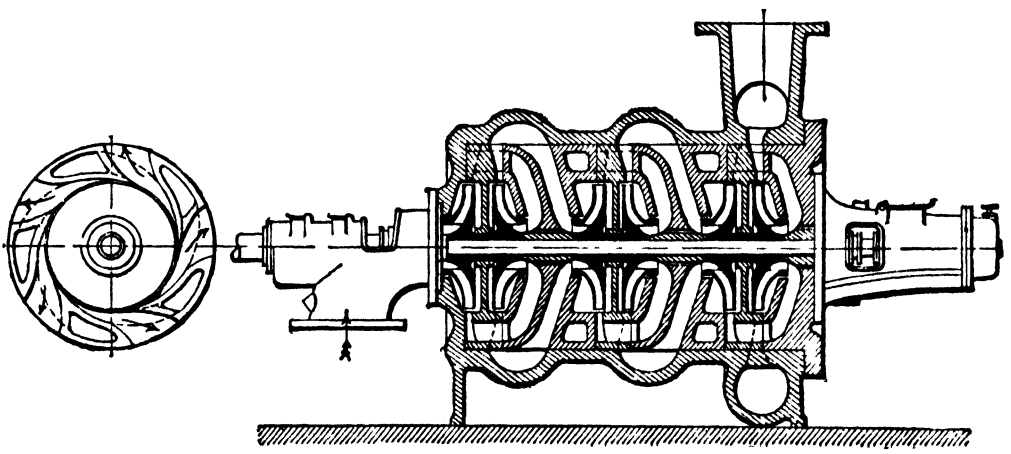

Fig. 297. Sulzer Multi-stage Turbine Pump.

The difference in pressure head at the entrances to any two consecutive wheels is the head impressed on the water by one wheel. If the head is h feet, and there are n wheels the total lift is nearly nh feet. The vanes of each wheel and the directions of the guide vanes are determined as explained for the single wheel so that losses by shock are reduced to a minimum, and the wheels and guide passages are made smooth so as to reduce friction.

Through the back of each wheel, just above the boss, are a number of holes which allow water to get behind part of the wheel, under the pressure at which it enters the wheel, to balance the end thrust which would otherwise be set up.

The pumps can be arranged to work either vertically or horizontally, and to be driven by belt, or directly by any form of motor.

Fig. 297 shows a multi-stage pump as made by Messrs Sulzer. The rotors are arranged so that the water enters alternately from the left and right and the end thrust is thus balanced. Efficiencies as high as 84 per cent. have been claimed for multi-stage pumps lifting against heads of 1200 feet and upwards.

The Worthington Pump Company state that the efficiency diminishes as the ratio of the head to the quantity increases, the best results being obtained when the number of gallons raised per minute is about equal to the total head.

Example. A pump is to be driven by a motor at 1450 revolutions per minute, and is required to lift 45 cubic feet of water per minute against a head of 320 feet. Required the diameter of the suction, and delivery pipes, and the diameter and number of the rotors, assuming a velocity of 5 5 feet per second in the suction and delivery pipes, and a manometric efficiency at the given delivery of 50 per cent.

Assume provisionally that the diameter of the boss of the wheel is 3 inches.

Let d be the external diameter of the annular opening, Fig. 295.

Then,
$$\frac{\frac{\pi}{4}(d^2-3^2)}{144}=\frac{45}{60\times 5\cdot 5},$$
from which $d=6$ inches nearly.

Taking the external diameter D of the wheel as $2d$, D is 1 foot.

Then,
$$v_1=\frac{1450}{63}\times\pi=76 \text{ feet per sec.}$$

Assuming radial blades at outlet the head lifted by each wheel is
$$h=0\cdot 5\,.\,\frac{76^2}{32} \text{ feet}$$
$$=90 \text{ feet.}$$

Four wheels would therefore be required.

241. Advantages of centrifugal pumps.

There are several advantages possessed by centrifugal pumps.

In the first place, as there are no sliding parts, such as occur in reciprocating pumps, dirty water and even water containing comparatively large floating bodies can be pumped without greatly endangering the pump.

Another advantage is that as delivery from the wheel is constant, there is no fluctuation of speed of the water in the suction or delivery pipes, and consequently there is no necessity for air vessels such as are required on the suction and delivery pipes of reciprocating pumps. There is also considerably less danger of large stress being engendered in the pipe lines by "water hammer*."

Another advantage is the impossibility of the pressure in the

* See page 384.

pump casing rising above that of the maximum head which the rotor is capable of impressing upon the water. If the delivery is closed the wheel will rotate without any danger of the pressure in the casing becoming greater than the centrifugal head (page 335). This may be of use in those cases where a pump is delivering into a reservoir or pumping from a reservoir. In the first case a float valve may be fitted, which, when the water rises to a particular height in the reservoir, closes the delivery. The pump wheel will continue to rotate but without delivering water, and if the wheel is running at such a velocity that the centrifugal head is greater than the head in the pipe line it will start delivery when the valve is opened. In the second case a similar valve may be used to stop the flow when the water falls below a certain level. This arrangement although convenient is uneconomical, as although the pump is doing no effective work, the power required to drive the pump may be more than 50 per cent. of that required when the pump is giving maximum discharge.

It follows that a centrifugal pump may be made to deliver water into a closed pipe system from which water may be taken regularly, or at intervals, while the pump continues to rotate at a constant velocity.

Pump delivering into a long pipe line. When a centrifugal pump or air fan is delivering into a long pipe line the resistances will vary approximately as the square of the quantity of water delivered by the pump.

Let p_2 be the absolute pressure per square inch which has to be maintained at the end of the pipe line, and let the resistances vary as the square of the velocity v along the pipe. Then if the resistances are equivalent to a head $h_f = kv^2$, the pressure head $\frac{p_1}{w}$ at the pump end of the delivery pipe must be

$$\frac{p_1}{w} = \frac{p_2}{w} + kv^2$$
$$= \frac{p_2}{w} + \frac{kQ^2}{A^2},$$

A being the sectional area of the pipe.

Let $\frac{p}{w}$ be the pressure head at the top of the suction pipe, then the gross lift of the pump is

$$h = \frac{p_1}{w} - \frac{p}{w} = \frac{p_2}{w} + \frac{kQ^2}{A^2} - \frac{p}{w}.$$

If, therefore, a curve, Fig. 298, be plotted having

$$\frac{(p_2 - p)}{w} + \frac{kQ^2}{A^2}$$

as ordinates, and Q as abscissae, it will be a parabola. If on the same figure a curve having h as ordinates and Q as abscissae be drawn for any given speed, the intersection of these two curves at the point P will give the maximum discharge the pump will deliver along the pipe at the given speed.

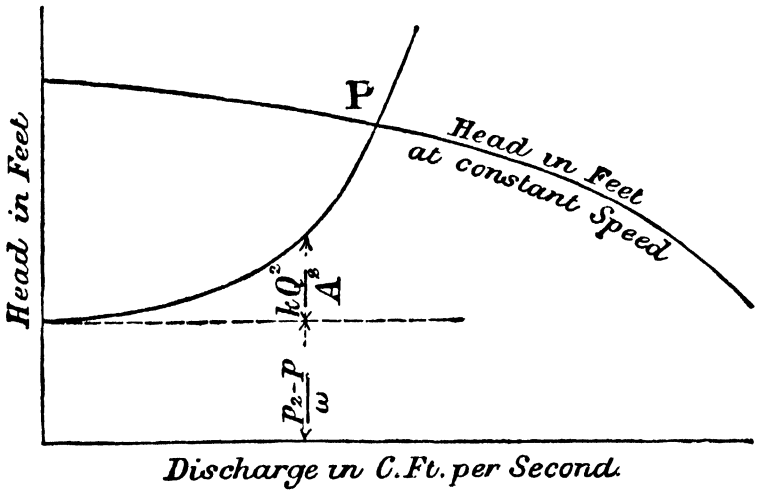

Fig. 298.

242. Parallel flow turbine pump.

By reversing the parallel flow turbine a pump is obtained which is similar in some respects to the centrifugal pump, but differs from it in an essential feature, that no head is impressed on the water by centrifugal forces between inlet and outlet. It therefore cannot be called a centrifugal pump.

The vanes of such a pump might be arranged as in Fig. 299, the triangles of velocities for inlet and outlet being as shown. Or the wheel may be of the form of a propeller (see Fig. 220).

The discharge may be allowed to take place into guide passages above or below the wheel, where the velocity can be gradually reduced.

Since there is no centrifugal head impressed on the water between inlet and outlet, Bernouilli's equation is

$$\frac{p_1}{w}+\frac{v_r^2}{2g}=\frac{p}{w}+\frac{V_r^2}{2g}.$$

From which, as in the centrifugal pump,

$$H=\frac{V_1v_1}{g}=\frac{p_1}{w}-\frac{p}{w}+\frac{U^2}{2g}-\frac{u^2}{2g}.$$

If the wheel has parallel sides as in Fig. 299, the axial velocity of flow will be constant and if the angles ϕ and θ are properly chosen, V_r and v_r may be equal, in which case the pressure at inlet and outlet of the wheel will be equal. This would have the advantage of stopping the tendency for leakage through the clearance between the wheel and casing.

Such a pump is similar to a reversed impulse turbine, the guide passages of which are kept full. The velocity with which the water leaves the wheel would however be great and the lift above the pump would depend upon the percentage of the velocity head that could be converted into pressure head.

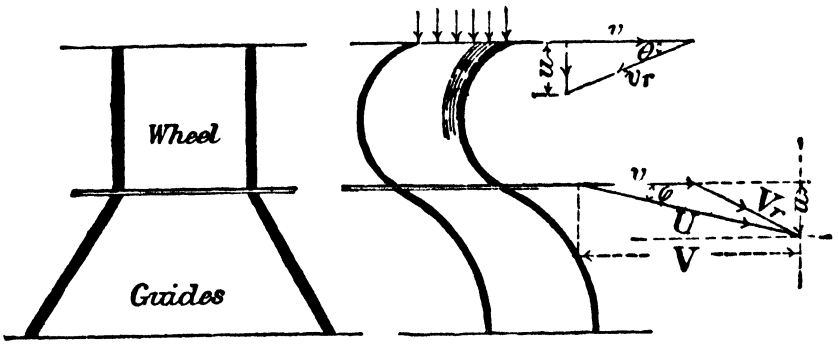

Fig 299.

Since there is no centrifugal head impressed upon the water, the parallel-flow pump cannot commence discharging unless the water in the pump is first set in motion by some external means, but as soon as the flow is commenced through the wheel, the full discharge under full head can be obtained.

To commence the discharge, the pump would generally have to be placed below the level of the water to be lifted, an auxiliary discharge pipe being fitted with a discharging valve, and a non-return valve in the discharge pipe, arranged as in Fig. 300.

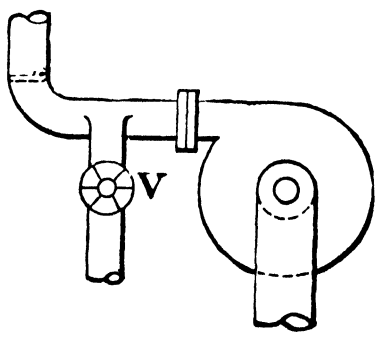

Fig. 300.

The pump could be started when placed at a height h_0 above the water in the sump, by using an ejector or air pump to exhaust the air from the discharge chamber, and thus start the flow through the wheel.

243. Inward flow turbine pump.

Like the parallel flow pump, an inward flow pump if constructed could not start pumping unless the water in the wheel were first set in motion. If the wheel is started with the water at rest the centrifugal head will tend to cause the flow to take place outwards, but if flow can be commenced and the vanes are properly designed, the wheel can be made to deliver water at its inner periphery. As in the centrifugal and parallel flow pumps, if the water enters the wheel radially, the total lift is

$$H = \frac{V_1 v_1}{g} = \frac{p_1}{w} - \frac{p}{w} + \frac{U^2}{2g} - \frac{u^2}{2g} \quad \ldots\ldots\ldots\ldots\ldots\ldots (1).$$

From the equation

$$\frac{p}{w} + \frac{V_r^2}{2g} = \frac{p_1}{w} + \frac{v_r^2}{2g} + \frac{v^2}{2g} - \frac{v_1^2}{2g},$$

it will be seen that unless V_r^2 is greater than

$$\frac{v_r^2}{2g} + \frac{v^2}{2g} - \frac{v_1^2}{2g},$$

p_1 is less than p, and $\frac{U^2}{2g}$ will then be greater than the total lift H.

Very special precautions must therefore be made to diminish the velocity U gradually, or otherwise the efficiency of the pump will be very low.

The centrifugal head can be made small by making the difference of the inner and outer radii small.

If

$$\frac{v_r^2}{2g} + \frac{v^2}{2g} - \frac{v_1^2}{2g}$$

is made equal to $\frac{V_r^2}{2g}$, the pressure at inlet and outlet will be the same, and if the wheel passages are carefully designed, the pressure throughout the wheel may be kept constant, and the pump becomes practically an impulse pump.

There seems no advantage to be obtained by using either a parallel flow pump or inward flow pump, except under rather exceptional circumstances, in place of the centrifugal pump, and as already suggested there are distinct disadvantages.

EXAMPLES.

(1) Find the horse-power required to raise 100 cubic feet of water per minute to a height of 125 feet, by a pump whose efficiency is $\frac{1}{2}$.

(2) A centrifugal pump has an inner radius of 4 inches and an outer radius of 12 inches. The angle the blade makes with the direction of motion at exit is 153 degrees. The wheel makes 545 revolutions per minute.

The discharge of the pump is 3 cubic feet per second. The sides of the wheel are parallel and 2 inches apart.

Determine the inclination of the tip of the blades at inlet so that there shall be no shock, the velocity with which the water leaves the wheel, and the theoretical lift. If the head due to the velocity with which the water leaves the wheel is lost, find the theoretical lift.

(3) A centrifugal pump wheel has a diameter of 7 inches and makes 1358 revolutions per minute.

The blades are formed so that the water enters and leaves the wheel without shock and the blades are radial at exit. The water is lifted by the pump 29·4 feet. Find the manometric efficiency of the pump.

(4) A centrifugal pump wheel 11 inches diameter which runs at 1203 revolutions per minute is surrounded by a vortex chamber 22 inches diameter, and has radial blades at exit. The pressure head at the circumference of the wheel is 23 feet. The water is lifted to a height of 43·5 feet above the centre of the pump. Find the efficiency of the whirlpool chamber.

(5) The radial velocity of flow through a pump is 5 feet per second, and the velocity of the outer periphery is 60 feet per second.

The angle the tangent to the blade at outlet makes with the direction of motion is 120 degrees. Determine the pressure head and velocity head where the water leaves the wheel, assuming the pressure head in the eye of the wheel is atmospheric, and thus determine the theoretical lift.

(6) A centrifugal pump with vanes curved back has an outer radius of 10 inches and an inlet radius of 4 inches, the tangents to the vanes at outlet being inclined at 40° to the tangent at the outer periphery. The section of the wheel is such that the radial velocity of flow is constant, 5 feet per second; and it runs at 700 revolutions per minute.

Determine:—

(1) the angle of the vane at inlet so that there shall be no shock,

(2) the theoretical lift of the pump,

(3) the velocity head of the water as it leaves the wheel. Lond. Un. 1906.

(7) A centrifugal pump 4 feet diameter running at 200 revolutions per minute, pumps 5000 tons of water from a dock in 45 minutes, the mean lift being 20 feet. The area through the wheel periphery is 1200 square inches and the angle of the vanes at outlet is 26°. Determine the hydraulic efficiency and estimate the average horse-power. Find also the lowest speed to start pumping against the head of 20 feet, the inner radius being half the outer. Lond. Un. 1906.

(8) A centrifugal pump, delivery 1500 gallons per minute with a lift of 25 feet, has an outer diameter of 16 inches, and the vane angle is 30°. All the kinetic energy at discharge is lost, and is equivalent to 50 per cent. of the actual lift. Find the revolutions per minute and the breadth at the inlet, the velocity of whirl being half the velocity of the wheel. Lond. Un. 1906.

(9) A centrifugal pump has a rotor $19\frac{1}{2}$ inches diameter; the width of the outer periphery is $3\frac{7}{16}$ inches. Using formula (1), section 236, determine the discharge of the pump when the head is 30 feet and v_1 is 50.

(10) The angle ϕ at the outlet of the pump of question (9) is 18°.

Find the velocity with which the water leaves the wheel, and the minimum proportion of the velocity head that must be converted into work, if the other losses are 15 per cent. and the total efficiency 70 per cent.

(11) The inner diameter of a centrifugal pump is $12\frac{1}{8}$ inches, the outer diameter $21\frac{5}{8}$ inches. The width of the wheel at outlet is $8\frac{5}{8}$ inches. Using equation (2), section 236, find the discharge of the pump when the head is 21·5 feet, and the number of revolutions per minute is 440.

(12) The efficiency of a centrifugal pump when running at 550 revolutions per minute is 70 per cent. The mean angle the tip of the vane makes with the direction of motion of the inlet edge of the vane is 99 degrees. The angle the tip of the vane makes with the direction of motion of the edge of the vane at exit is 167 degrees. The radial velocity of flow is 3·6 feet per second. The internal diameter of the wheel is $11\frac{1}{8}$ inches and the external diameter $19\frac{1}{2}$ inches.

Find the kinetic energy of the water when it leaves the wheel.

Assuming that 5 per cent. of the energy is lost by friction, and that one-half of the kinetic energy at exit is lost, find the head lost at inlet when the lift is 30 feet. Hence find the probable velocity impressed on the water as it enters the wheel.

(13) Describe a forced vortex, and sketch the form of the free surface when the angular velocity is constant.

In a centrifugal pump revolving horizontally under water, the diameter of the inside of the paddles is 1 foot, and of the outside 2 feet, and the pump revolves at 400 revolutions per minute. Find approximately how high the water would be lifted above the tail water level.

(14) Explain the action of a centrifugal pump, and deduce an expression for its efficiency. If such a pump were required to deliver 1000 gallons an hour to a height of 20 feet, how would you design it? Lond. Un. 1903.

(15) Find the speed of rotation of a wheel of a centrifugal pump which is required to lift 200 tons of water 5 feet high in one minute; having given the efficiency is 0·6. The velocity of flow through the wheel is 4·5 feet per second, and the vanes are curved backward so that the angle between their directions and a tangent to the circumference is 20 degrees. Lond. Un. 1905.

(16) A centrifugal pump is required to lift 2000 gallons of water per minute through 20 feet. The velocity of flow through the wheel is 7 feet per second and the efficiency 0·6. The angle the tip of the vane at outlet makes with the direction of motion is 150 degrees. The outer radius of the wheel is twice the inner. Determine the dimensions of the wheel.

CHAPTER XI.

RECIPROCATING PUMPS.

244. Reciprocating pumps.

A simple form of reciprocating force pump is shown diagrammatically in Fig. 301. It consists of a plunger P working in

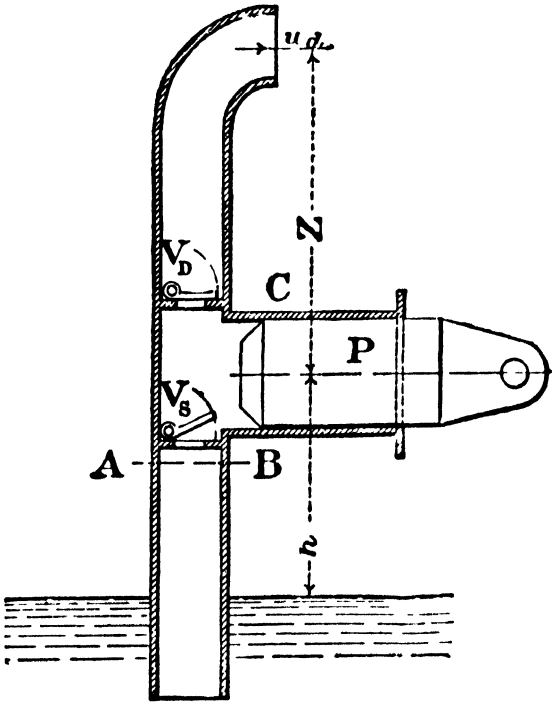

Fig. 301.

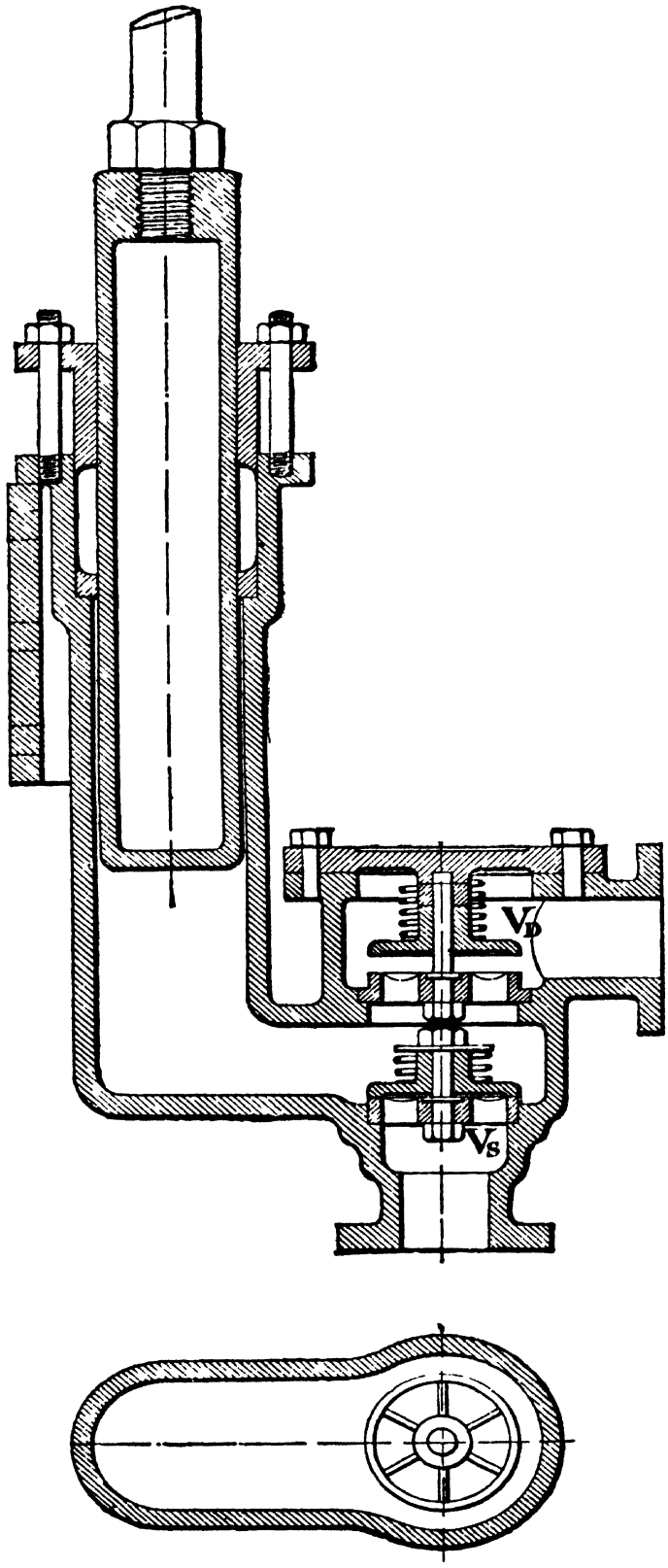

Fig. 301 *a*. Vertical Single-acting Reciprocating Pump.

a cylinder C and has two valves V_S and V_D, known as the suction and delivery valves respectively. A section of an actual pump is shown in Fig. 301 *a*.

Assume for simplicity the pump to be horizontal, with the centre of the barrel at a distance h from the level of the water in the well; h may be negative or positive according as the pump is above or below the surface of the water in the well.

Let B be the height of the barometer in inches of mercury. The equivalent head H, in feet of water, is

$$H = \frac{13{\cdot}596 \,.\, B}{12} = 1{\cdot}133B,$$

which may be called the barometric height in feet of water.

When B is 30 inches H is 34 feet.

When the plunger is at rest, the valve V_D is closed by the head of water above it, and the water in the suction pipe is sustained by the atmospheric pressure.

Let h_0 be the pressure head in the cylinder, then

$$h_0 = H - h,$$

or the pressure in pounds per square inch in the cylinder is

$$p = {\cdot}43\,(H - h),$$

p cannot become less than the vapour tension of the water. At ordinary temperatures this is nearly zero, and h cannot be greater than 34 feet.

If now the plunger is moved outwards, very slowly, and there is no air leakage the valve V_S opens, and the atmospheric pressure causes water to rise up the suction pipe and into the cylinder, h_0 remaining practically constant.

On the motion of the plunger being reversed, the valve V_S closes, and the water is forced through V_D into the delivery pipe.

In actual pumps if h_0 is less than from 4 to 9 feet the dissolved gases that are in the water are liberated, and it is therefore practically impossible to raise water more than from 25 to 30 feet.

Let A be the area of the plunger in square inches and L the stroke in feet. The pressure on the end of the plunger outside the cylinder is equal to the atmospheric pressure, and neglecting the friction between the plunger and the cylinder, the force necessary to move the plunger is

$$P = {\cdot}43\,\{H - (H - h)\}\,A = {\cdot}43h \,.\, A \text{ lbs.},$$

and the work done by the plunger per stroke is

$$E = {\cdot}43h \,.\, A \,.\, L \text{ ft. lbs.}$$

If V is the volume displacement per stroke of the plunger in cubic feet

$$E = 62{\cdot}4h \,.\, V \text{ ft. lbs.}$$

The weight of water lifted per stroke is ·43AL lbs., and the work done per pound is, therefore, h foot pounds.

Let Z be the head in the delivery pipe above the centre of the pump, and u_d the velocity with which the water leaves the delivery pipe.

Neglecting friction, the work done by the plunger during the delivery stroke is $Z + \frac{u_d^2}{2g}$ foot pounds per pound, and the total work in the two strokes is therefore $h + Z + \frac{u_d^2}{2g}$ foot pounds per pound.

The actual work done on the plunger will be greater than this due to mechanical friction in the pump, and the frictional and other hydraulic losses in the suction and delivery pipes, and at the valves; and the volume of water lifted per suction stroke will generally be slightly less than the volume moved through by the plunger.

Let W be the weight of water lifted per minute, and h_t the total height through which the water is lifted.

The effective work done by the pump is $W \,.\, h_t$ foot pounds per minute, and the effective horse-power is

$$HP = \frac{Wh_t}{33{,}000}.$$

245. Coefficient of discharge of the pump. Slip.

The theoretical discharge of a plunger pump is the volume displaced by the plunger per stroke multiplied by the number of delivery strokes per minute.

The actual discharge may be greater or less than this amount. The ratio of the discharge per stroke to the volume displaced by the plunger per stroke is the *Coefficient of discharge*, and the difference between these quantities is called the *Slip*.

If the actual discharge is less than the theoretical the slip is said to be positive, and if greater, negative.

Positive slip is due to leakage past the valves and plunger, and in a steady working pump, with valves in proper condition, should be less than five per cent.

The causes of negative slip and the conditions under which it takes place will be discussed later*.

* See page 491.

246. Diagram of work done by the pump.

Theoretical Diagram. Let a diagram be drawn, Fig. 302, the ordinates representing the pressure in the cylinder and the abscissae the corresponding volume displacements of the plunger. The volumes will clearly be proportional to the displacement of the plunger from the end of its stroke. During the suction stroke, on the assumption made above that the plunger moves very slowly and that therefore all frictional resistances, and also the inertia forces, may be neglected, the absolute pressure behind the plunger is constant and equal to $H - h$ feet of water, or $62{\cdot}4\,(H - h)$ pounds per square foot, and on the delivery stroke the pressure is

$$62{\cdot}4\left(Z + H + \frac{u_d^2}{2g}\right) \text{ pounds per square foot.}$$

The effective work done per suction stroke is ABCD which equals $62{\cdot}4 . h . V$, and during the delivery stroke is EADF which equals

$$62{\cdot}4\left(Z + \frac{u_d^2}{2g}\right),$$

and EBCF is the work done per cycle, that is, during one suction and one delivery stroke.

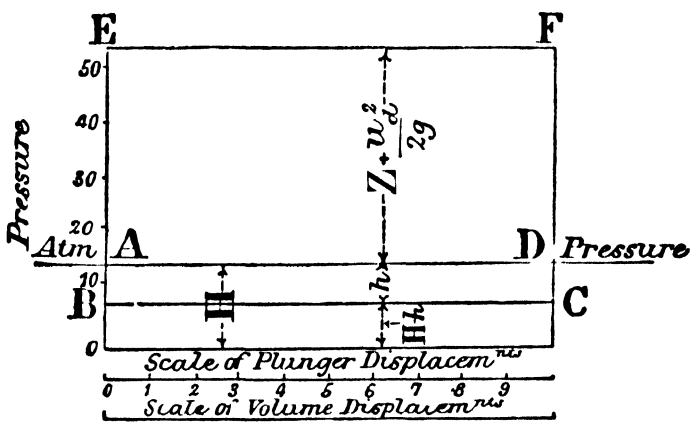

Fig. 302. Theoretical diagram of pressure in a Reciprocating Pump.

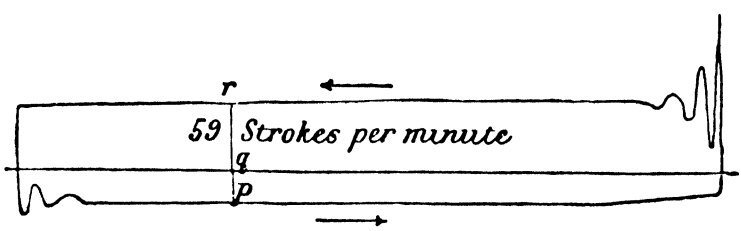

Fig. 303.

Actual diagram. Fig. 303 shows an actual diagram taken by means of an indicator from a single acting pump, when running at a slow speed.

The diagram approximates to the rectangular form and only

differs from the above in that at any point p in the suction stroke, pq in feet of water is equal to h plus the losses in the suction pipe, including loss at the valve, plus the head required to accelerate the water in the suction pipe, and qr is the head required to lift the water and overcome all losses, and to accelerate the water in the delivery pipe. The velocity of the plunger being small, these correcting quantities are practically inappreciable.

The area of this diagram represents the actual work done on the water per cycle, and is equal to $W(Z+h)$, together with the head due to velocity of discharge and all losses of energy in the suction and delivery pipes.

It will be seen later that although at any instant the pressure in the cylinder is effected by the inertia forces, the total work done in accelerating the water is zero.

247. The accelerations of the pump plunger and of the water in the suction pipe.

The theoretical diagram, Fig. 302, has been drawn on the assumption that the velocity of the plunger is very small and without reference to the variation of the velocity and of the acceleration of the plunger, but it is now necessary to consider this variation and its effect on the motion of the water in the suction and delivery pipes. To realise how the velocity and acceleration of the plunger vary, suppose it to be driven by a crank and connecting rod, as in Fig. 304, and suppose the crank rotates with a uniform angular velocity of ω radians per second.

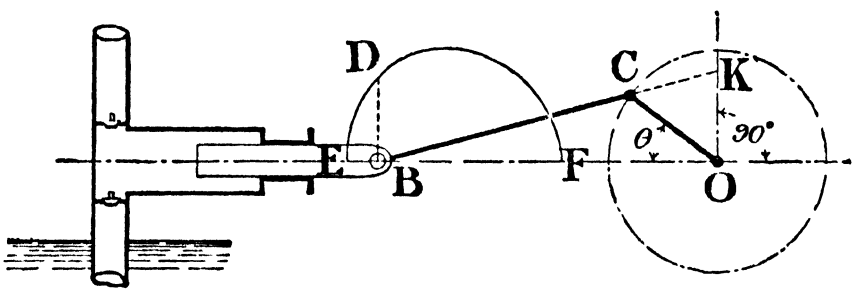

Fig. 304.

If r is the radius of the crank in feet, the velocity of the crank pin is $V = \omega r$ feet per second. For any crank position OC, it is proved in books on mechanism, that the velocity of the point B is $\frac{V.OK}{OC}$. By making BD equal to OK a diagram of velocities EDF is found.

When CB is very long compared with CO, OK is equal to $OC \sin\theta$, and the velocity v of the plunger is then $V \sin\theta$, and

EDF is a semicircle. The plunger then moves with simple harmonic motion.

If now the suction pipe is as in Fig. 304, and there is to be continuity in the column of water in the pipe and cylinder, the velocity of the water in the pipe must vary with the velocity of the plunger.

Let v be the velocity of the plunger at any instant, A and a the cross-sectional areas of the plunger and of the pipe respectively. Then the velocity in the pipe must be $\frac{v \cdot A}{a}$.

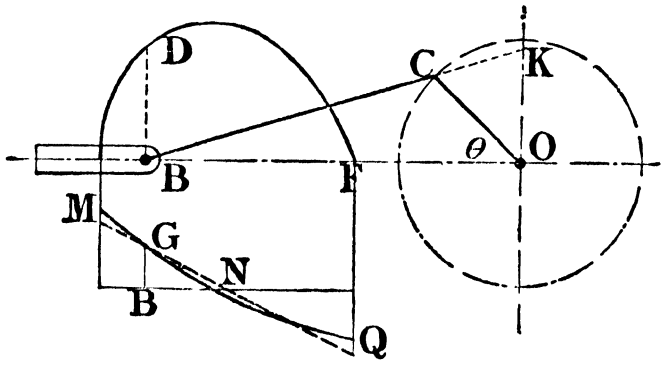

Fig. 305.

As the velocity of the plunger is continuously changing, it is continuously being accelerated, either positively or negatively.

Let l be the length of the connecting rod in feet. The acceleration* F of the point B in Fig. 305, for any crank angle θ, is approximately

$$F = \omega^2 r \left(\cos\theta + \frac{r}{l}\cos 2\theta\right).$$

Plotting F as BG, Fig. 305, a curve of accelerations MNQ is obtained.

When the connecting rod is very long compared with the length of the crank, the motion is simple harmonic, and the acceleration becomes

$$F = \omega^2 r \cos\theta,$$

and the diagram of accelerations is then a straight line.

Velocity and acceleration of the water in the suction pipe. The velocity and acceleration of the plunger being v and F respectively, for continuity, the velocity of the water in the pipe must be $v\frac{A}{a}$ and the acceleration

$$f_a = \frac{F \cdot A}{a}.$$

* See *Balancing of Engines*, W. E. Dalby.

248. The effect of acceleration of the plunger on the pressure in the cylinder during the suction stroke.

When the velocity of the plunger is increasing, F is positive, and to accelerate the water in the suction pipe a force P is required. The atmospheric pressure has, therefore, not only to lift the water and overcome the resistance in the suction pipe, but it has also to provide the necessary force to accelerate the water, and the pressure in the cylinder is consequently diminished.

On the other hand, as the velocity of the plunger decreases, F is negative, and the piston has to exert a reaction upon the water to diminish its velocity, or the pressure on the plunger is increased.

Let L be the length of the suction pipe in feet, a its cross-sectional area in square feet, f_a the acceleration of the water in the pipe at any instant in feet per second per second, and w the weight of a cubic foot of water.

Then the mass of water in the pipe to be accelerated is $w.a.L$ pounds, and since by Newton's second law of motion

$$\text{accelerating force} = \text{mass} \times \text{acceleration},$$

the accelerating force required is

$$P = \frac{w.a.L}{g}.f_a \text{ lbs.}$$

The pressure per unit area is

$$\frac{P}{a} = \frac{w.L}{g}.f_a \text{ lbs.},$$

and the equivalent head of water is

$$h_a = \frac{L}{g}.f_a,$$

or since

$$f_a = \frac{F.A}{a},$$

$$h_a = \frac{L.A}{g.a}.F.$$

This may be large if any one of the three quantities, L, $\frac{A}{a}$, or F is large.

Neglecting friction and other losses the pressure in the cylinder is now

$$H - h - h_a,$$

and the head resisting the motion of the piston is $h + h_a$.

249. Pressure in the cylinder during the suction stroke when the plunger moves with simple harmonic motion.

If the plunger be supposed driven by a crank and very long

connecting rod, the crank rotating uniformly with angular velocity ω radians per second, for any crank displacement θ,

$$F = \omega^2 r \cos\theta,$$

and

$$h_a = \frac{L.A.\omega^2 r}{g.a}.\cos\theta.$$

The pressure in the cylinder is

$$H - h - \frac{LA\omega^2 r\cos\theta}{ga}.$$

When θ is zero, $\cos\theta$ is unity, and when θ is 90 degrees, $\cos\theta$ is zero. For values of θ between 90 and 180 degrees, $\cos\theta$ is negative.

The variation of the pressure in the cylinder is seen in Fig. 306, which has been drawn for the following data.

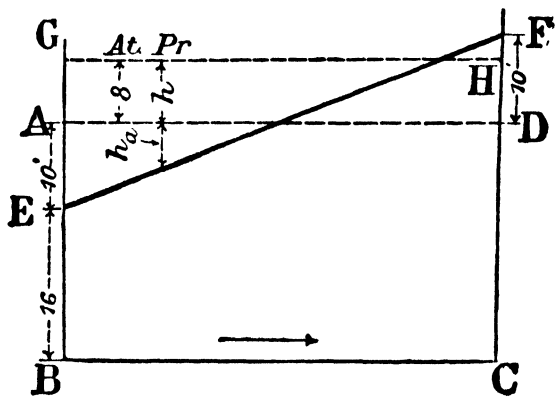

Fig. 306.

Diameter of suction pipe $3\frac{1}{8}$ inches, length 12 feet 6 inches. Diameter of plunger 4 inches, length of stroke $7\frac{1}{2}$ inches.

Number of strokes per minute 136. Height of the centre of the pump above the water in the sump, 8 feet. The plunger is assumed to have simple harmonic motion.

The plunger, since its motion is simple harmonic, may be supposed to be driven by a crank $3\frac{3}{4}$ inches long, making 68 revolutions per minute, and a very long connecting rod.

The angular velocity of the crank is

$$\omega = \frac{2\pi.68}{60} = 7{\cdot}1 \text{ radians per second.}$$

The acceleration at the ends of the stroke is

$$F = \omega^2.r = 7{\cdot}1^2 \times 0{\cdot}312$$
$$= 15{\cdot}7 \text{ feet per sec. per sec.,}$$

$$\frac{A}{a} = \left(\frac{4}{3{\cdot}125}\right)^2 = 1{\cdot}63,$$

and

$$h_a = \frac{12{\cdot}5.15{\cdot}7.1{\cdot}63}{32} = 10 \text{ feet.}$$

The pressure in the cylinder neglecting the water in the cylinder at the beginning of the stroke is, therefore,

$$34-(10+8)=16 \text{ feet},$$

and at the end it is $34-8+10=36$ feet. That is, it is greater than the atmospheric pressure.

When θ is 90 degrees, $\cos\theta$ is zero, and h_a is therefore zero, and when θ is greater than 90 degrees, $\cos\theta$ is negative.

The area AEDF is clearly equal to GADH, and the work done per suction stroke is, therefore, not altered by the accelerating forces; but the rate at which the plunger is working at various points in the stroke is affected by them, and the force required to move the plunger may be very much increased.

In the above example, for instance, the force necessary to move the piston at the commencement of the stroke has been more than doubled by the accelerating force, and instead of remaining constant and equal to ·43.8.A during the stroke, it varies from

$$P=\cdot 43\,(8+10)\,A$$

to

$$P=\cdot 43\,(8-10)\,A.$$

Air vessels. In quick running pumps, or when the length of the pipe is long, the effects of these accelerating forces tend to become serious, not only in causing a very large increase in the stresses in the parts of the pump, but as will be shown later, under certain circumstances they may cause separation of the water in the pipe, and violent hammer actions may be set up. To reduce the effects of the accelerating forces, air vessels are put on the suction and delivery pipes, Figs. 310 and 311.

250. Accelerating forces in the delivery pipe of a plunger pump when there is no air vessel.

When the plunger commences its return stroke it has not only to lift the water against the head in the delivery pipe, but, if no air vessel is provided, it has also to accelerate the water in the cylinder and the delivery pipe. Let D be the diameter, a_1 the area, and L_1 the length of the pipe. Neglecting the water in the cylinder, the acceleration head when the acceleration of the piston is F, is

$$h_a=\frac{L_1 . A . F}{g a_1},$$

and neglecting head lost by friction etc., and the water in the cylinder, the head resisting motion is

$$Z+h_a+\frac{u_d^2}{2g}.$$

If F is negative, h_a is also negative.

When the plunger moves with simple harmonic motion the diagram is as shown in Fig. 307, which is drawn for the same data as for Fig. 306, taking Z as 20 feet, L_1 as 30 feet, and the diameter D as $3\frac{1}{8}$ inches.

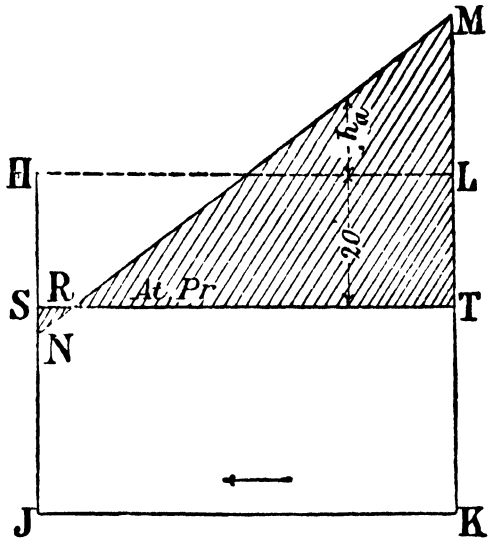

Fig. 307.

The total work done on the water in the cylinder is NJKM, which is clearly equal to HJKL. If the atmospheric pressure is acting on the outer end of the plunger, as in Fig. 301, the nett work done on the plunger will be SNRMT, which equals HSTL.

251. Variation of pressure in the cylinder due to friction when there is no air vessel.

Head lost by friction in the suction and delivery pipes. If v is the velocity of the plunger at any instant during the suction stroke, d the diameter, and a the area of the suction pipe, the velocity of the water in the pipe, when there is no air vessel, is $\frac{vA}{a}$, and the head lost by friction at that velocity is

$$h_f = \frac{4fv^2A^2L}{2gda^2}.$$

Similarly, if a_1, D, and L_1 are the area, diameter and length respectively of the delivery pipe, the head lost by friction, when the plunger is making the delivery stroke and has a velocity v, is

$$H_f = \frac{4fv^2A^2L_1}{2gDa_1^2}.$$

When the plunger moves with simple harmonic motion,

$$v = \omega r \sin\theta,$$

and

$$h_f = \frac{4fA^2\omega^2r^2\sin^2\theta L}{2gda^2}.$$

If the pump makes n strokes per second, or the number of revolutions of the crank is $\frac{n}{2}$ per second, and l_s is the length of the stroke,

$$\omega = \pi n,$$

and

$$l_s = 2r.$$

Substituting for ω and r,

$$h_f = \frac{f A^2 \pi^2 n^2 L l_s^2 \sin^2\theta}{2gda^2}.$$

Plotting values of h_f at various points along the stroke, the parabolic curve EMF, Fig. 308, is obtained.

When θ is 90 degrees, $\sin\theta$ is unity, and h_f is a maximum. The mean ordinate of the parabola, which is the mean frictional head, is then

$$\frac{2}{3}\,\frac{f A^2 \pi^2 n^2 L l_s^2}{2gda^2},$$

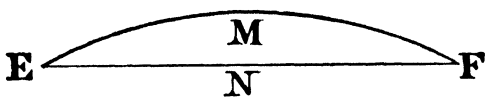

Fig. 308.

and since the mean frictional head is equal to the energy lost per pound of water, the work done per stroke by friction is

$$\frac{62{\cdot}4 \,.\, \frac{2}{3} A l_s f A^2 \pi^2 n^2 L l_s^2}{2gda^2} \text{ foot lbs.},$$

all dimensions being in feet.

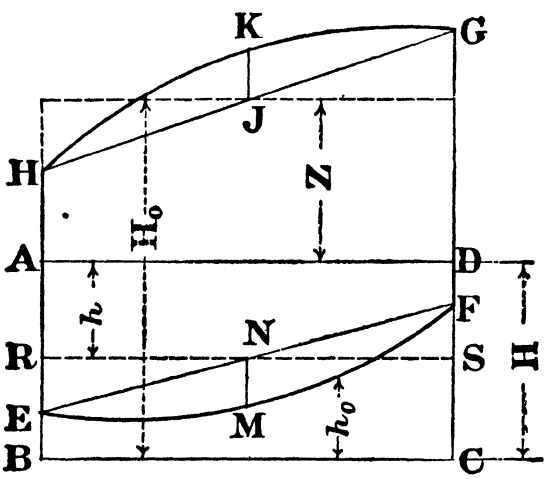

Fig. 309.

Let D_0 be the diameter of the plunger in feet. Then

$$A = \frac{\pi}{4} D_0^2,$$

and

$$\frac{A^2}{a^2} = \frac{D_0^4}{d^4}.$$

Therefore, work done by friction per suction stroke, when there is no air vessel on the suction pipe, is

$$\frac{5fn^2D_0^6Ll_s^3}{d^5}.$$

The pressure in the cylinder for any position of the plunger during the suction stroke is now, Fig. 309,

$$h_0 = H - h - h_a - h_f.$$

At the ends of the stroke h_f is zero, and for simple harmonic motion h_a is zero at the middle of the stroke.

The work done per suction stroke is equal to the area AEMFD, which equals

$$ARSD + EMF = 62{\cdot}4hV + \frac{5fn^2D_0^6Ll_s^3}{d^5}.$$

Similarly, during the delivery stroke the work done is

$$62{\cdot}4ZV + \frac{5f_1n^2D_0^6L_1l_s^3}{D^5}.$$

The friction diagram is HKG, Fig. 309, and the resultant diagram of total work done during the two strokes is EMFGKH.

252. Air vessel on the suction pipe.

As remarked above, in quick running pumps, or when the lengths of the pipes are long, the effects of the accelerating forces become serious, and air vessels are put on the suction and delivery pipes, as shown in Figs. 310 and 311. By this means the velocity in the part of the suction pipe between the well and the air vessel is practically kept constant, the water, which has its velocity continually changing as the velocity of the piston changes, being practically confined to the water in the pipe between the air vessel and the cylinder. The head required to accelerate the water at any instant is consequently diminished, and the friction head also remains nearly constant.

Let l_1 be the length of the pipe between the air vessel and the cylinder, l the length from the well to the air vessel, a the cross-sectional area of each of the pipes and d the diameter of the pipe.

Let h_v be the pressure head in the air vessel and let the air vessel be of such a size that the variation of the pressure may for simplicity be assumed negligible.

Suppose now that water flows from the well up the pipe AB continuously and at a uniform velocity. The pump being single acting, while the crank makes one revolution, the quantity of water which flows along AB must be equal to the volume the plunger displaces per stroke.

The time for the crank to make one revolution is

$$t = \frac{2\pi}{\omega} \text{ secs.},$$

therefore, the mean velocity of flow is

$$v_m = \frac{A}{a}\frac{2r\omega}{2\pi} = \frac{A}{\pi}\frac{\omega r}{a}.$$

$\left(\text{For a double acting pump } v_m = \frac{2A}{a}\frac{\omega r}{\pi}.\right)$

During the delivery stroke, all the water is entering the air vessel, the water in the pipe BC being at rest.

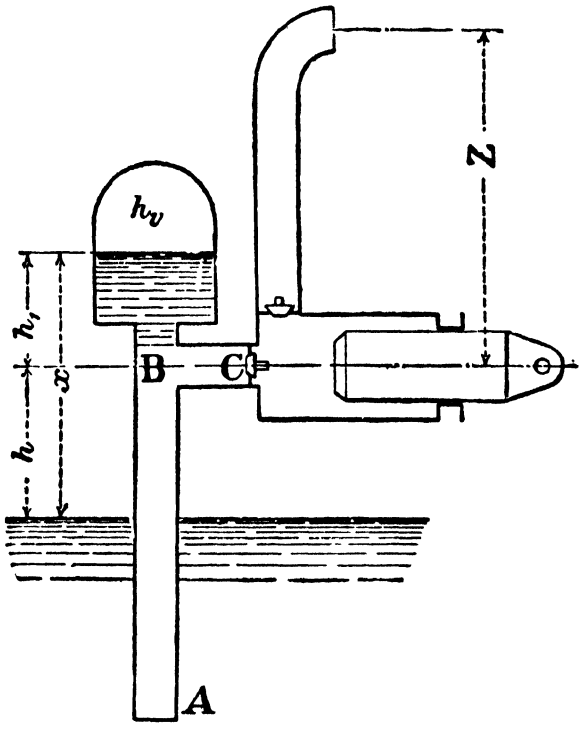

Fig. 310.

Then by Bernouilli's theorem, including friction and the velocity head, other losses being neglected, the atmospheric head

$$H = x + h_v + \frac{A^2}{2ga^2}\frac{\omega^2 r^2}{\pi^2} + \frac{4fA^2\omega^2 r^2 l}{2gd\pi^2 a^2} \text{ .....(1).}$$

The third and fourth quantities of the right-hand part of the equation will generally be very small and h_v is practically equal to $H - x$.

When the suction stroke is taking place, the water in the pipe BC has to be accelerated.

Let H_B be the pressure head at the point B, when the velocity of the plunger is v feet per second, and the acceleration F feet per second per second.

Let h_f be the loss of head by friction in AB, and h_f' the loss in BC. The velocity of flow along BC is $\frac{vA}{a}$, and the velocity of flow from the air vessel is, therefore,

$$\frac{v.A}{a} - \frac{A\omega r}{\pi a}.$$

Then considering the pipe AB,

$$H_B = H - h - \frac{A^2\omega^2 r^2}{2g\pi^2 a^2} - h_f,$$

and from consideration of the pressures above B,

$$H_B = h_v + h_1 - \frac{\left(\frac{vA}{a} - \frac{A\omega r}{\pi a}\right)^2}{2g}.$$

Neglecting losses at the valve, the pressure in the cylinder is then approximately

$$h_0 = H_B - h_f' - \frac{Al_1F}{ag}$$

$$= H - h - \frac{A^2\omega^2 r^2}{2g\pi^2 a^2} - h_f - h_f' - \frac{Al_1F}{ag}.$$

Neglecting the small quantity $\frac{A^2\omega^2 r^2}{2g\pi^2 a^2}$,

$$h_0 = H - h - (h_f + h_f') - \frac{Al_1F}{ag}.$$

For a plunger moving with simple harmonic motion

$$h_0 = H - h - \frac{4f\omega^2 r^2 A^2}{2ga^2 d}\left(\frac{l}{\pi^2} + l_1 \sin^2\theta\right) - \frac{A}{a}\frac{l_1\omega^2 r\cos\theta}{g}.$$

By putting the air vessel near to the cylinder, thus making l_1 small, the acceleration head becomes very small and

$$h_0 = H - h - h_f \text{ nearly},$$

and for simple harmonic motion

$$h_0 = H - h - \frac{4f\omega^2 r^2 A^2}{2ga^2 d}\frac{l}{\pi^2}.$$

The mean velocity in the suction pipe can very readily be determined as follows.

Let Q be the quantity of water lifted per second in cubic feet.

Then since the velocity along the suction pipe is practically constant $v_m = \frac{Q}{a}$ and the friction head is

$$h_f = \frac{4fQ^2 l}{2ga^2 d}.$$

When the pump is single acting and there are n strokes per second,

$$Q = Al_s \cdot \frac{n}{2},$$

and therefore,

$$v_m = \frac{A \cdot l_s \cdot n}{2a},$$

and

$$h_f = \frac{fA^2 l_s^2 n^2 l}{2ga^2 d}.$$

If the pump is double acting,

$$h_f = \frac{2fA^2 l_s^2 n^2 l}{ga^2 d}.$$

For the same length of suction pipe the mean friction head, when there is no air vessel and the pump is single acting, is $\frac{2}{3}\pi^2$ times the friction head when there is an air vessel.

253. Air vessel on the delivery pipe.

An air vessel on the delivery pipe serves the same purpose as on the suction pipe, in diminishing the mass of water which changes its velocity as the piston velocity changes.

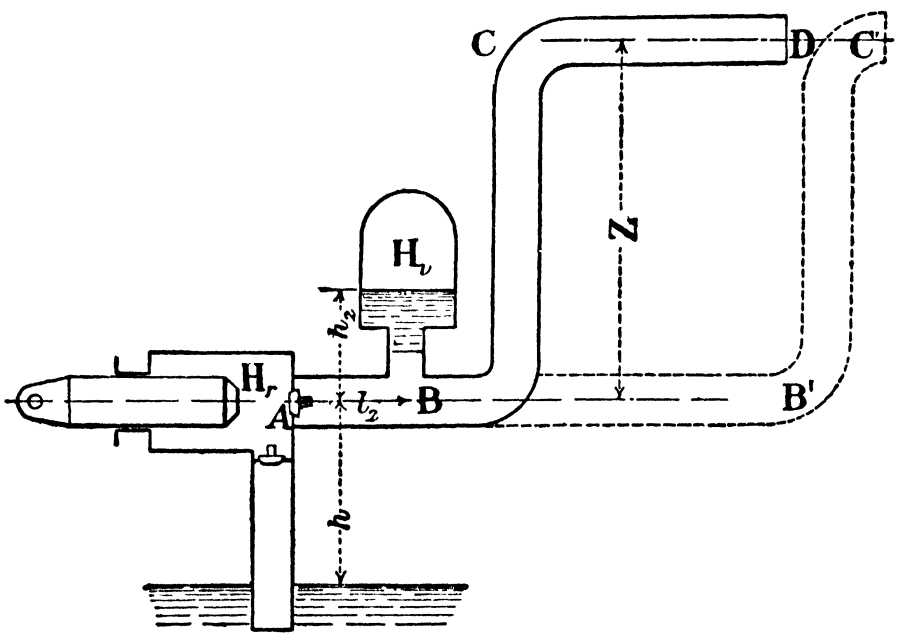

Fig 311.

As the delivery pipe is generally much longer than the suction pipe, the changes in pressure due to acceleration may be much greater, and it accordingly becomes increasingly desirable to provide an air vessel.

Assume the air vessel so large that the pressure head in it remains practically constant.

Let l_2, Fig. 311, be the length of the pipe between the pump and the air vessel, l_d be the length of the whole pipe, and a_1 and D the area and diameter respectively of the pipe.

Let h_2 be the height of the surface of the water in the air vessel above the centre of the pipe at B, and let H_v be the pressure head in the air vessel. On the assumption that H_v remains constant, the velocity in the part BC of the pipe is practically constant.

Let Q be the quantity of water delivered per second.

The mean velocity in the part BC of the delivery pipe will be

$$u = \frac{Q}{\frac{\pi}{4} D^2}.$$

The friction head in this part of the pipe is constant and equal to

$$\frac{4fu^2(l_d - l_2)}{2gD}.$$

Considering then the part BC of the delivery pipe, the total head at B required to force the water along the pipe will be

$$Z + \frac{4fu^2}{2gD}(l_d - l_2) + H.$$

But the head at B must be equal to $H_v + h_2$ nearly, therefore,

$$H_v + h_2 = Z + \frac{4fu^2}{2gD}(l_d - l_2) + H \quad \text{.....(1).}$$

In the part AB of the pipe the velocity of the water will vary with the velocity of the plunger.

Let v and F be the velocity and acceleration of the plunger respectively.

Neglecting the water in the cylinder, the head H_r resisting the motion of the plunger will be the head at B, plus the head necessary to overcome friction in AB, and to accelerate the water in AB.

Therefore, $$H_r = H_v + h_2 + \frac{4fl_2v^2A^2}{2gDa_1^2} + \frac{F.A.l_2}{a_1g}.$$

For the same total length of the delivery pipe the acceleration head is clearly much smaller than when there is no air vessel.

Substituting for $H_v + h_2$ from (1),

$$H_r = Z + H + \frac{4fu^2}{2gD}(l_d - l_2) + \frac{4fl_2v^2A^2}{2gDa_1^2} + \frac{F.A.l_2}{a_1g}.$$

If the pump is single acting and the plunger moves with simple harmonic motion and makes n strokes per second,

$$Q = A2r\frac{n}{2},$$

and $$u = \frac{Arn}{a_1}.$$

Therefore,

$$H_r = Z + H + \frac{4fA^2r^2n^2(l_d - l_2)}{2gDa_1^2} + \frac{4fl_2\omega^2r^2\sin^2\theta\, A^2}{2gDa_1^2} + \frac{A}{a_1}\frac{l_2}{g}\omega^2 r\cos\theta.$$

Neglecting the friction head in l_2 and assuming l_2 small compared with l_d,

$$H_r = Z + H + \frac{4fr^2n^2A^2l_d}{2gDa_1^2} + \frac{Al_2}{a_1g}\omega^2 r\cos\theta.$$

254. Separation during the suction stroke.

In reciprocating pumps it is of considerable importance that during the stroke no discontinuity of flow shall take place, or in other words, no part of the water in the pipe shall separate from the remainder, or from the water in the cylinder of the pump. Such separation causes excessive shocks in the working parts of the pump and tends to broken joints and pipes, due to the hammer action caused by the sudden change of momentum of a large mass of moving water overtaking the part from which it has become separated.

Consider a section AB of the pipe, Fig. 301, near to the inlet valve. For simplicity, neglect the acceleration of the water in the cylinder or suppose it to move with the plunger, and let the acceleration of the plunger be F feet per second per second.

If now the water in the pipe is not to be separated from that in the cylinder, the acceleration f_a of the water in the pipe must not be less than $\frac{FA}{a}$ feet per second per second, or separation will not take place as long as $\frac{FA}{a} \leqq f_a$.

If f_a at any instant becomes equal to $\frac{FA}{a}$, and f_a is not to become less than $\frac{FA}{a}$, the diminution ∂f of f_a, when F is diminished by a small amount ∂F, must not be less than $\frac{A}{a}\partial F$, or in general the differential of f_a must not be less than $\frac{A}{a}$ times the differential of F.

The general condition for no separation is, therefore,

$$\frac{A}{a}\partial F \leqq \partial f \quad \text{.....(1).}$$

Perhaps a simpler way to look at the question is as follows.

Let it be supposed that for given data the curve of pressures in the cylinder during the suction stroke has been drawn as in Fig. 309. In this figure the pressure in the cylinder always remains positive, but suppose some part of the curve of pressures EF to

come below the zero line BC as in Fig. 312*. The pressure in the cylinder then becomes negative; but it is impossible for a fluid to be in tension and therefore discontinuity in the flow must occur†.

In actual pumps the discontinuity will occur, if the curve EFG falls below the pressure at which the dissolved gases are liberated, or the pressure head becomes less than from 4 to 10 feet.

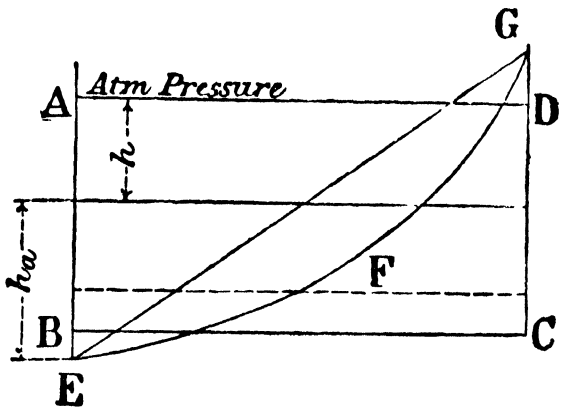

Fig. 312.

At the dead centre the pressure in the cylinder just becomes zero when $h + h_a = \mathrm{H}$, and will become negative when $h + h_a > \mathrm{H}$.

Theoretically, therefore, for no separation at the dead centre,

$$h_a \leqq \mathrm{H} - h \quad \text{or} \quad \frac{\mathrm{FAL}}{ga} \leqq \mathrm{H} - h.$$

If separation takes place when the pressure head is less than some head h_m, for no separation,

$$h_a \leqq \mathrm{H} - h_m - h,$$

and

$$\frac{\mathrm{FA}}{a} \leqq \frac{g\,(\mathrm{H} - h_m - h)}{l}.$$

Neglecting the water in the cylinder, at any other point in the stroke, the pressure is negative when

$$h + h_a + h_f + \frac{v^2}{2g}\frac{\mathrm{A}^2}{a^2} > \mathrm{H}.$$

That is, when $$h + \frac{\mathrm{FA}}{a}\frac{\mathrm{L}}{g} + h_f + \frac{v^2}{2g}\frac{\mathrm{A}^2}{a^2} > \mathrm{H}.$$

And the condition for no separation, therefore, is

$$\frac{\mathrm{FA}}{a} \leqq \frac{g\left(\mathrm{H} - h_m - h - \frac{v^2\mathrm{A}^2}{2ga^2} - h_f\right)}{\mathrm{L}} \quad \ldots\ldots\ldots\ldots\ldots\ldots (2).$$

* See also Fig. 315, page 489.

† Surface tension of fluids at rest is not alluded to.

255. Separation during the suction stroke when the plunger moves with simple harmonic motion.

When the plunger is driven by a crank and very long connecting rod, the acceleration for any crank angle θ is

$$F = \omega^2 r \cos\theta,$$

or if the pump makes n single strokes per second,

$$\omega = \pi n,$$

and
$$F = \pi^2 n^2 . r \cos\theta = \frac{\pi^2 n^2}{2} . l_s \cos\theta,$$

l_s being the length of the stroke.

F is a maximum when θ is zero, and separation will not take place at the end of the stroke if

$$\frac{A}{a}\omega^2 r \leqq \frac{g(H - h_m - h)}{L},$$

and will just not take place when

$$\frac{A}{a}\omega^2 r \text{ or } \frac{\pi^2}{2} . \frac{A}{a} n^2 l_s = g\left(\frac{H - h_m - h}{L}\right).$$

The minimum area of the suction pipe for no separation is, therefore,

$$a = \frac{A\omega^2 r L}{g(H - h_m - h)} \quad \text{.....(3)}$$

and the maximum number of single strokes per second is

$$n = \frac{1}{\pi}\sqrt{\frac{2g(H - h_m - h)\,a}{A . l_s . L}} \quad \text{.....(4).}$$

Separation actually takes place at the dead centre at a less number of strokes than given by formula (4), due to causes which could not very well be considered in deducing the formula.

Example. A single acting pump has a stroke of $7\frac{1}{2}$ inches and the plunger is 4 inches diameter. The diameter of the suction pipe is $3\frac{1}{8}$ inches, the length 12·5 feet, and the height of the centre of the pump above the water in the well is 10 feet.

To find the number of strokes per second at which separation will take place, assuming it to do so when the pressure head is zero.

$$H - h = 24 \text{ feet},$$

$$\frac{A}{a} = 1{\cdot}63,$$

and, therefore,
$$n = \frac{1}{\pi}\sqrt{\frac{64 \times 24 \times 12}{1{\cdot}63 \times 7{\cdot}5 \times 12{\cdot}5}}$$

$$= \frac{11}{\pi} = 3{\cdot}5$$

$$= 210 \text{ strokes per minute.}$$

Nearly all actual diagrams taken from pumps, Figs. 313—315, have the corner at the commencement of the suction stroke

rounded off, so that even at very slow speeds slight separation occurs. The two principal causes of this are probably to be found first, in the failure of the valves to open instantaneously, and second, in the elastic yielding of the air compressed in the water at the end of the delivery stroke.

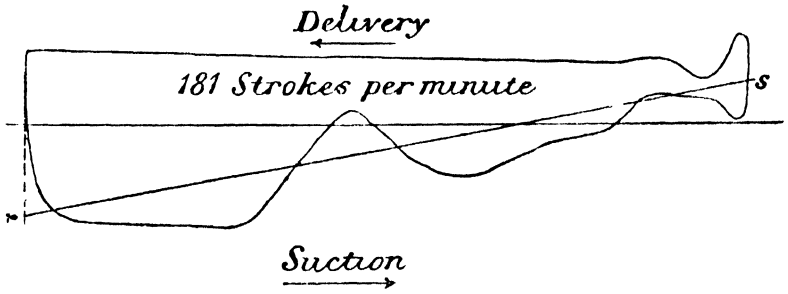

Fig. 313.

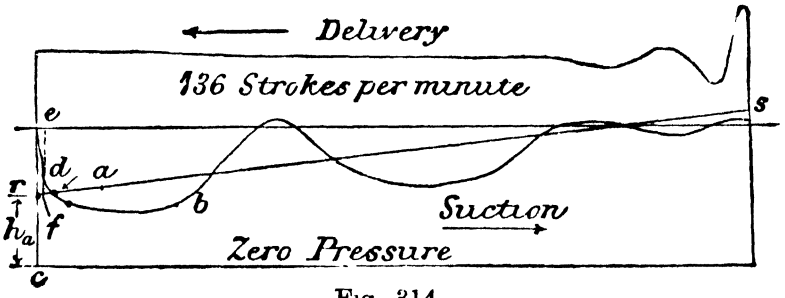

Fig. 314.

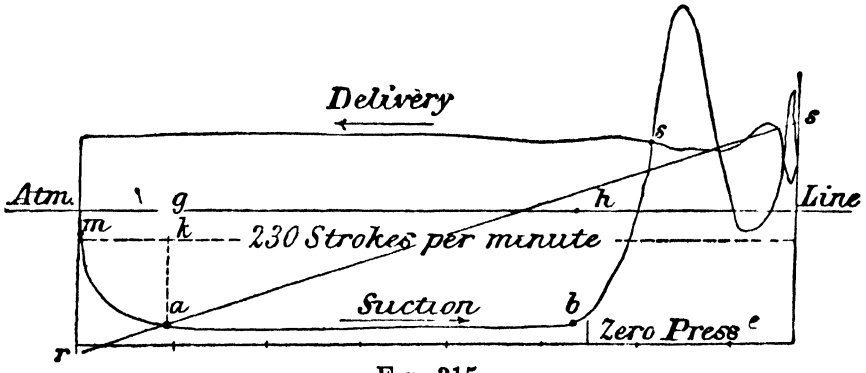

Fig. 315.

The diagrams Figs. 303 and 313—315, taken from a single-acting pump, having a stroke of 7½ inches, and a ram 4 inches diameter, illustrate the effect of the rounding of the corner in producing separation at a less speed than that given by equation (4).

Even at 59 strokes per minute, Fig. 303, at the dead centre a momentary separation appears to have taken place, and the water has then overtaken the plunger, the hammer action producing vibration of the indicator. In Figs. 313—315, the ordinates to the line *rs* give the theoretical pressures during the suction stroke. The actual pressures are shown by the diagram. At 136 strokes

per minute at the point e in the stroke the available pressure is clearly less than ef the head required to lift the water and to produce acceleration, and the water lags behind the plunger. This condition obtains until the point a is passed, after which the water is accelerated at a quicker rate than the piston, and finally overtakes it at the point b, when it strikes the plunger and the indicator spring receives an impulse which makes the wave form on the diagram. At 230 strokes per minute, the speed being greater than that given by the formula when h_m is assumed to be 10 feet, the separation is very pronounced, and the water does not overtake the piston until ·7 of the stroke has taken place. It is interesting to endeavour to show by calculation that the water should overtake the plunger at b.

While the piston moves from a to b the crank turns through 70 degrees, in $\frac{60}{115} \cdot \frac{70}{360}$ seconds = ·101 seconds. Between these two points the pressure in the cylinder is 2 lbs. per sq. inch, and therefore the head available to lift the water, to overcome all resistances and to accelerate the water in the pipe is 29·3 feet.

The height of the centre of the pump is 6′ 3″ above the water in the sump. The total length of the suction pipe is about 12·5 feet, and its diameter is $3\frac{1}{8}$ inches.

Assuming the loss of head at the valve and due to friction etc., to have a mean value of 2·5 feet, the mean effective head accelerating the water in the pipe is 20·5 feet. The mean acceleration is, therefore,

$$f_a = \frac{20{\cdot}5 \times 32}{12{\cdot}5} = 52{\cdot}5 \text{ feet per sec. per sec.}$$

When the piston is at g the water will be at some distance behind the piston. Let this distance be z inches and let the velocity of the water be u feet per sec. Then in the time it takes the crank to turn through 70 degrees the water will move through a distance

$$\begin{aligned} S &= ut + \tfrac{1}{2} f_a t^2 \\ &= 0{\cdot}101u + \tfrac{1}{2} 52{\cdot}5 \times {\cdot}0102 \text{ feet} \\ &= 1{\cdot}2u + 3{\cdot}2 \text{ inches.} \end{aligned}$$

The horizontal distance ab is 4·2 inches, so that $z + 4{\cdot}2$ inches should be equal to $1{\cdot}2u + 3{\cdot}2$ inches.

The distance of the point g from the end of the stroke is ·84 inch and the time taken by the piston to move from rest to g, is 0·058 second. The mean pressure accelerating the water during this time is the mean ordinate of akm when plotted on a time base; this is about 5 lbs. per sq. inch, and the equivalent head is 12·8 feet.

The frictional resistances, which vary with the velocity, will be small. Assuming the mean frictional head to be ·25 foot, the head causing acceleration is 12·55 feet and the mean acceleration of the water in the pipe while the piston moves from rest to g is, therefore,

$$f_a = \frac{12{\cdot}55 \times 32}{12{\cdot}5} = 32 \text{ feet per sec. per sec.}$$

The velocity in the pipe at the end of 0·058 second, should therefore be

$$v = 32 \times {\cdot}058 = 1{\cdot}86 \text{ feet per sec.}$$

and the velocity in the cylinder

$$u = \frac{1{\cdot}86}{1{\cdot}63} = 1{\cdot}12 \text{ feet per sec.}$$

Since the water in the pipe starts from rest the distance it should move in 0·058 second is

$$12 \,.\, \tfrac{1}{2}\, 32 \,.\, ({\cdot}058)^2 = {\cdot}65 \text{ in.,}$$

and the distance it should advance in the cylinder is

$$\frac{0{\cdot}65}{1{\cdot}63} \text{ ins.} = {\cdot}4 \text{ in.;}$$

so that z is 0·4 in.

Then $$z + 4{\cdot}2 \text{ ins.} = 4{\cdot}6,$$

and $$1{\cdot}2u + 3{\cdot}2 \text{ ins.} = 4{\cdot}57 \text{ ins.}$$

The agreement is, therefore, very close, and the assumptions made are apparently justified.

256. Negative slip in a plunger pump.

Fig. 315 shows very clearly the momentary increase in the pressure due to the blow, when the water overtakes the plunger, the pressure rising above the delivery pressure, and causing discharge before the end of the stroke is reached. If no separation had taken place, the suction pressure diagram would have approximated to the line rs and the delivery valve would still have opened before the end of the stroke was reached.

The coefficient of discharge is 1·025, whereas at 59 strokes per minute it is only 0·975.

257. Separation at points in the suction stroke other than at the end of the stroke.

The acceleration of the plunger for a crank displacement θ is $\omega^2 r \cos\theta$, and of the water in the pipe is $\frac{\omega^2 r A}{a}\cos\theta$, and therefore for no separation at any crank angle θ

$$\frac{\omega^2 r A}{a}\cos\theta \leq \frac{g}{L}\left(H - h_m - h - \frac{\omega^2 r^2 \sin^2\theta A^2}{2ga^2} - h_f\right) \quad \ldots\ldots(1).$$

Putting in the value of h_f, and differentiating both sides of the equation, and using the result of equation (1), page 456,

$$\frac{A}{a}\omega^2 r \sin\theta \leqq \frac{\omega^2 r^2}{L}\frac{A^2}{a^2}\left(1+\frac{4fL}{d}\right)\sin\theta\cos\theta,$$

from which $$aL \leqq A\left(1+\frac{4fL}{d}\right) r\cos\theta.$$

Separation will just not take place if

$$aL = Ar\left(1+\frac{4fL}{d}\right)\cos\theta,$$

or when $$\cos\theta = \frac{aL}{Ar\left(1+\frac{4fL}{d}\right)} \quad \text{.....(2).}$$

Since $\cos\theta$ cannot be greater than unity, there is no real solution to this equation, unless $Ar\left(1+\frac{4fL}{d}\right)$ is equal to or greater than al.

If, therefore, $\frac{4fl}{d}$ is supposed equal to zero, and aL the volume of the suction pipe is greater than half the volume of the cylinder, separation cannot take place if it does not take place at the dead centre.

In actual pumps, aL is not likely to be less than Ar, and consequently it is only necessary to consider the condition for no separation at the dead centre.

258. Separation with a large air vessel on the suction pipe. To find whether separation will take place with a large air vessel on the suction pipe, it is only necessary to substitute in equations (2), section 254, and (3), (4), section 255, h_v of Fig. 310 for H, l_1 for L, and h_1 for h. In Fig. 310, h_1 is negative.

For no separation when the plunger is at the end of the stroke the minimum area of the pipe between the air vessel and the cylinder is

$$a = \frac{\omega^2 r \,.\, A \,.\, l_1}{g\,(h_v - h_m - h_1)}.$$

Substituting for h_v its value from equation (1), section 253, and h for $x - h_1$, Fig. 310,

$$a = \frac{\omega^2 r \,.\, A \,.\, l_1}{g\left(H - h - h_m - \frac{\omega^2 r^2 A^2}{2g\pi^2 a} - \frac{4fL\omega^2 r^2 A^2}{2gd\pi^2 a^2}\right)}.$$

If the velocity and friction heads, in the denominator, be neglected as being small compared with $(H - h)$, then,

$$a = \frac{\omega^2 r A l_1}{g\,(H - h_m - h)}.$$

The maximum number of strokes is

$$n = \frac{1}{\pi}\sqrt{\frac{2g\,(\mathrm{H} - h - h_m)\,a}{\mathrm{A}l_s l_1}}.$$

A pump can therefore be run at a much greater speed, without fear of separation, with an air vessel on the suction pipe, than without one.

259. Separation in the delivery pipe.

Consider a pipe as shown in Fig. 316, the centre of CD being at a height Z above the centre of AB.

Let the pressure head at D be H_0, which, when the pipe discharges into the atmosphere, becomes H.

Let l, l_1 and l_2 be the lengths of AB, BC and CD respectively, h_f, h_{f_1} and h_{f_2} the losses of head by friction in these pipes when the plunger has a velocity v, and h_m the pressure at which separation actually takes place.

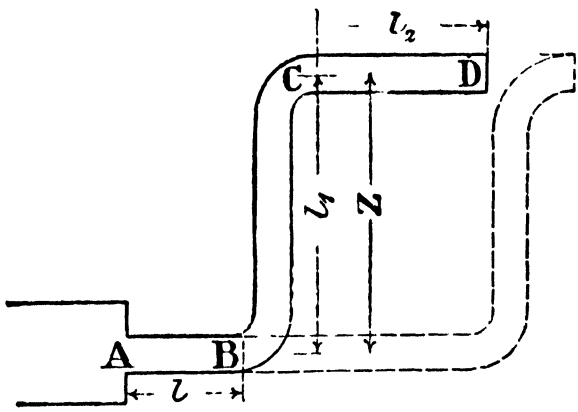

Fig. 316.

Suppose now the velocity of the plunger is diminishing, and its retardation is F feet per second per second. If there is to be continuity, the water in the pipe must be also retarded by $\frac{\mathrm{F}\,.\,\mathrm{A}}{a}$ feet per second per second, and the pressure must always be positive and greater than h_m.

Let H_c be the pressure at C; then the head due to acceleration in the pipe DC is

$$\frac{\mathrm{FA}l_2}{ga}$$

and if the pipe CD is full of water

$$\mathrm{H}_c = \mathrm{H}_0 - \frac{\mathrm{FA}l_2}{ga} + h_f,$$

which becomes negative when

$$\frac{\mathrm{FA}l_2}{ga} > \mathrm{H}_0 + h_f.$$

The condition for no separation at C is, therefore,

$$H_0 - h_m + h_f \geqq \frac{FAl_2}{ga},$$

or separation takes place when

$$\frac{FAl_2}{ga} > H_0 - h_m + h_f.$$

At the point B separation will take place if

$$\frac{FA}{a}\frac{(l_1 + l_2)}{g} > H_0 - h_m + h_{f_2} + h_{f_1} + Z,$$

and at the point A if

$$\frac{FA}{a}\frac{(l + l_1 + l_2)}{g} > H_0 + Z - h_m + h_f + h_{f_1} + h_{f_2}.$$

At the dead centre v is zero, and the friction head vanishes.

For no separation at the point C it is then necessary that

$$H_0 - h_m \geqq \frac{FAl_2}{ga},$$

for no separation at B

$$H_0 + Z - h_m \geqq \frac{FA\,(l_1 + l_2)}{ga},$$

and for no separation at A

$$H_0 + Z - h_m \geqq \frac{FA\,(l_1 + l_2 + l_3)}{ga}.$$

For given values of H_0, F and Z, the greater l_2, the more likely is separation to take place at C, and it is therefore better, for a given total length of the discharge pipe, to let the pipe rise near the delivery end, as shown by dotted lines, rather than as shown by the full lines.

If separation does not take place at A it clearly will not take place at B.

Example. The retardation of the plunger of a pump at the end of its stroke is 8 feet per second per second. The ratio of the area of the delivery pipe to the plunger is 2, and the total length of the delivery pipe is 152 feet. The pipe is horizontal for a length of 45 feet, then vertical for 40 feet, then rises 5 feet on a slope of 1 vertical to 8 horizontal and is then horizontal, and discharges into the atmosphere. Will separation take place on the assumption that the pressure head cannot be less than 7 feet?

Ans. At the bottom of the sloping pipe the pressure is

$$39 \text{ feet} - \frac{FA}{a}\frac{67}{32} = 5{\cdot}5 \text{ feet}.$$

The pressure head is therefore less than 7 feet and separation will take place. The student should also find whether there is separation at any other point.

260. Diagram of pressure in the cylinder and work done during the suction stroke, considering the variable quantity of water in the cylinder.

It is instructive to consider the suction stroke a little more in detail.

Let v and F be the velocity and acceleration respectively of the piston at any point in the stroke.

As the piston moves forward, water will enter the pipe from the well and its velocity will therefore be increased from zero to $v.\frac{A}{a}$; the head required to give this velocity is

$$h_1 = \frac{v^2A^2}{2ga^2} \quad \text{.....(1).}$$

On the other hand water that enters the cylinder from the pipe is diminished in velocity from $\frac{vA}{a}$ to v, and neglecting any loss due to shock or due to contraction at the valve there is a gain of pressure head in the cylinder equal to

$$h_2 = \frac{v^2}{2g}\frac{A^2}{a^2} - \frac{v^2}{2g} \quad \text{.....(2).}$$

The friction head in the pipe is

$$h_f = \frac{4fLv^2A^2}{2ga^2d} \quad \text{.....(3).}$$

The head required to accelerate the water in the pipe is

$$h_a = \frac{FAL}{ag} \quad \text{.....(4).}$$

The mass of water to be accelerated in the cylinder is a variable quantity and will depend upon the plunger displacement.

Let the displacement be x feet from the end of the stroke.

The mass of water in the cylinder is $\frac{wAx}{g}$ lbs. and the force required to accelerate it is

$$P = \frac{wAx}{g}.F,$$

and the equivalent head is

$$\frac{P}{wA} = \frac{x.F}{g}.$$

The total acceleration head is therefore

$$\frac{F}{g}\left(x + \frac{LA}{a}\right).$$

Now let H_0 be the pressure head in the cylinder, then

$$H_0 = H - h - \frac{v^2}{2g}\frac{A^2}{a^2} + \frac{v^2}{2g}\frac{A^2}{a^2} - \frac{v^2}{2g} - \frac{4fLA^2v^2}{2g\,.\,da^2} - \frac{F}{g}\left(x + \frac{LA}{a}\right)$$

$$= H - h - \frac{v^2}{2g} - \frac{4fLA^2v^2}{2gda^2} - \frac{F}{g}\left(x + \frac{LA}{a}\right) \quad \ldots\ldots\ldots\ldots\ldots\ldots (5).$$

When the plunger moves with simple harmonic motion, and is driven by a crank of radius r rotating uniformly with angular velocity ω, the displacement of the plunger from the end of the stroke is $r(1 - \cos\theta)$, the velocity $\omega r \sin\theta$ and its acceleration is $\omega^2 r \cos\theta$.

Therefore

$$H_0 = H - h - \frac{\omega^2 r^2 \sin^2\theta}{2g} - \frac{4fLA^2v^2}{2gda^2}$$

$$- \frac{L}{g}\omega^2 r \frac{A}{a}\cos\theta - \frac{\omega^2 r^2 \cos\theta}{g} + \frac{\omega^2 r^2 \cos^2\theta}{g} \quad \ldots (6).$$

Work done during the suction stroke. Assuming atmospheric pressure on the face of the plunger, the pressure per square foot resisting its motion is

$$(H - H_0)\,w.$$

For any small plunger displacement ∂x, the work done is, therefore,

$$A\,(H - H_0)\,w\,.\,\partial x,$$

and the total work done during the stroke is

$$E = \int_0^{2l} A\,(H - H_0)\,w\,.\,\partial x.$$

The displacement from the end of the stroke is

$$x = r\,(1 - \cos\theta),$$

and therefore $$dx = r \sin\theta\, d\theta,$$

and $$E = \int_0^{\pi} w\,.\,A\,(H - H_0)\,r \sin\theta\, d\theta.$$

Substituting for H_0 its value from equation (6)

$$E = w\,.\,Ar \int_0^{\pi} h + \frac{4fLA^2\omega^2 r^2 \sin^2\theta}{2gda^2} + \frac{\omega^2 r^2 \sin^2\theta}{2g}$$

$$+ \frac{\omega^2 r^2 \cos\theta}{g} - \frac{\omega^2 r^2 \cos^2\theta}{g} + \frac{L}{g}\frac{A}{a}\omega^2 r \cos\theta\Big\} \sin\theta\, d\theta.$$

The sum of the integration of the last four quantities of this expression is equal to zero, so that the work done by the accelerating forces is zero, and

$$E = wAr \int^{\pi} (h + h_f) \sin\theta\, d\theta$$

$$= 2Arw\left(h + \tfrac{2}{3}\,.\,\frac{4fLA^2\omega^2 r^2}{2g\,.\,da^2}\right).$$

Or the work done is that required to lift the water through a height h together with the work done in overcoming the resistance in the pipe.

Diagrams of pressure in the cylinder and of work done per stroke. The resultant pressure in the cylinder, and the head resisting the motion of the piston can be represented diagrammatically, by plotting curves the ordinates of which are equal to H_0 and $H - H_0$ as calculated from equations (5) or (6). For clearness the diagrams corresponding to each of the parts of equation (6) are drawn in Figs. 318—321 and in Fig. 317 is shown the combined diagram, any ordinate of which equals

$$H - h - (kl + cd + ef - gh).$$

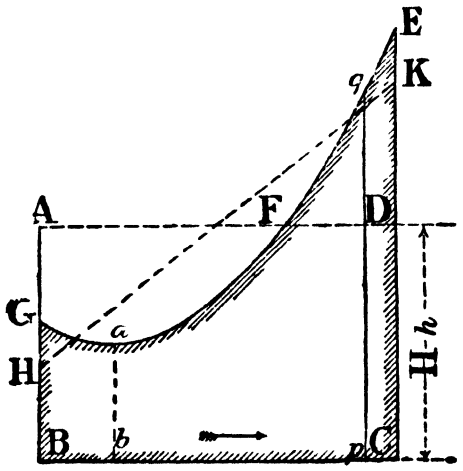

Fig. 317.

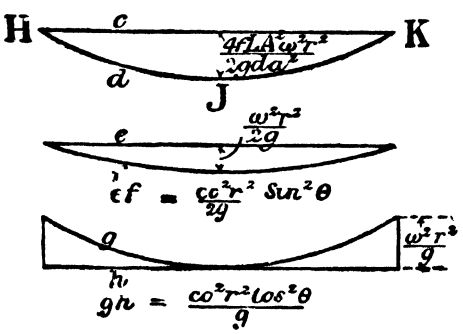

Figs. 318, 319, 320.

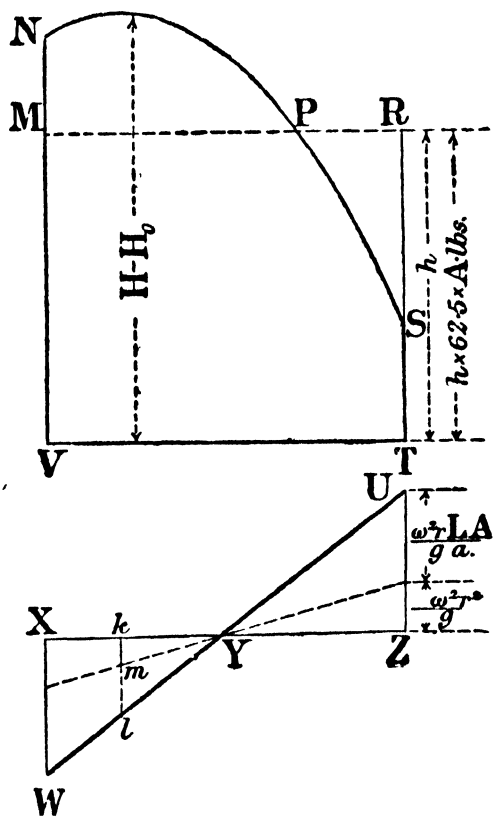

Figs. 321, 322.

In Fig. 318 the ordinate cd is equal to

$$-\frac{4f\mathrm{LA}^2}{2gda^2}\,\omega^2r^2\sin^2\theta,$$

and the curve HJK is a parabola, the area of which is

$$-\frac{2}{3}\cdot\frac{4f\mathrm{LA}^2}{2gda^2}\,\omega^2r^2l_s.$$

In Fig. 319, the ordinate ef is

$$-\frac{\omega^2 r^2}{2g}\sin^2\theta,$$

and the ordinate gh of Fig. 320 is

$$+\frac{\omega^2 r^2}{g}\cos^2\theta.$$

The areas of the curves are respectively

$$\frac{2}{3}\frac{\omega^2 r^2}{2g}l_s \text{ and } \frac{1}{3}\frac{\omega^2 r^2}{g}.l_s,$$

and are therefore equal; and since the ordinates are always of opposite sign the sum of the two areas is zero.

In Fig. 322, km is equal to

$$\frac{\omega^2 r^2\cos\theta}{g},$$

and kl to

$$\frac{\omega^2 r}{g}\cos\theta\left(x+\frac{\text{L}.\text{A}}{a}\right).$$

Since $\cos\theta$ is negative between 90° and 180° the area WXY is equal to YZU.

Fig. 321 has for its ordinate at any point of the stroke, the head $\text{H}-\text{H}_0$ resisting the motion of the piston.

This equals $\qquad h+kl+cd+ef-gh,$

and the curve NPS is clearly the curve GFE, inverted.

The area VNST measured on the proper scale, is the work done per stroke, and is equal to VMRT + HJK.

The scale of the diagram can be determined as follows.

Since h feet of water $= 62{\cdot}4h$ lbs. per square foot, the pressure in pounds resisting the motion of the piston at any point in the stroke is

$$62{\cdot}4\,.\,\text{A}\,.\,h \text{ lbs.}$$

If therefore, VNST be measured in square feet the work done per stroke in ft.-lbs.

$$= 62{\cdot}4\,\text{A}\,.\,\text{VNST}.$$

261. Head lost at the suction valve.

In determining the pressure head H_0 in the cylinder, no account has been taken of the head lost due to the sudden enlargement from the pipe into the cylinder, or of the more serious loss of head due to the water passing through the valve. It is probable that the whole of the velocity head, $\frac{v^2\text{A}^2}{2ga^2}$, of the water entering the cylinder from the pipe is lost at the valve, in which case the available head H will not only have to give this velocity to the water, but will

also have to give a velocity head $\frac{v^2}{2g}$ to any water entering the cylinder from the pipe.

The pressure head H_0 in the cylinder then becomes

$$H_0 = H - h - \frac{v^2}{2g} \cdot \frac{A^2}{a^2} - \frac{v^2}{2g} - \frac{4fLv^2A^2}{2gda^2} - \frac{F}{g}\left(x + \frac{lA}{a}\right).$$

262. Variation of the pressure in hydraulic motors due to inertia forces.

The description of hydraulic motors is reserved for the next chapter, but as these motors are similar to reversed reciprocating pumps, it is convenient here to refer to the effect of the inertia forces in varying the effective pressure on the motor piston.

If L is the length of the supply pipe of a hydraulic motor, a the cross-sectional area of the supply, A the cross-sectional area of the piston of the motor, and F the acceleration, the acceleration of the water in the pipe is $\frac{F \cdot A}{a}$ and the head required to accelerate the water in the pipe is

$$h_a = \frac{FAL}{ga}.$$

If p is the pressure per square foot at the inlet end of the supply pipe, and h_f is equal to the losses of head by friction in the pipe, and at the valve etc., when the velocity of the piston is v, the pressure on the piston per square foot is

$$p_e = p - wh_a - wh_f.$$

When the velocity of the piston is diminishing, F is negative, and the inertia of the water in the pipe increases the pressure on the piston.

Example (1). The stroke of a double acting pump is 15 inches and the number of strokes per minute is 80. The diameter of the plunger is 12 inches and it moves with simple harmonic motion. The centre of the pump is 18 feet above the water in the well and the length of the suction pipe is 25 feet.

To find the diameter of the suction pipe that no separation shall take place, assuming it to take place when the pressure head becomes less than 7 feet.

As the plunger moves with simple harmonic motion, it may be supposed driven by a crank of $7\frac{1}{2}$ inches radius and a very long connecting rod, the angular velocity of the crank being $2\pi 40$ radians per minute.

The acceleration at the end of the stroke is then

$$\frac{4\pi^2 \cdot 40^2 \cdot r}{60}.$$

Therefore,
$$\frac{25}{32}\,\frac{4\pi^2}{60^2} \times 40^2 \times \frac{5A}{8a} = 34' - 20',$$

from which
$$\frac{A}{a} = 1{\cdot}64.$$

Therefore $$\frac{D}{d}=1\cdot28$$

and $$d=9\cdot4''.$$

Ar is clearly less than al, therefore separation cannot take place at any other point in the stroke.

Example (2). The pump of example (1) delivers water into a rising main 1225 feet long and 5 inches diameter, which is fitted with an air vessel.

The water is lifted through a total height of 220 feet.

Neglecting all losses except friction in the delivery pipe, determine the horse-power required to work the pump. $f=\cdot0105$.

Since there is an air vessel in the delivery pipe the velocity of flow u will be practically uniform.

Let A and a be the cross-sectional areas of the pump cylinder and pipe respectively.

Then, $$u=\frac{A\,.\,2r\,.\,80}{60a}=\frac{D^2}{d^2}\,\frac{2r\,.\,80}{60}$$

$$=\frac{12^2}{25}\cdot\frac{10}{8}\cdot\frac{80}{60}=9\cdot6 \text{ ft. per sec.}$$

The head h lost due to friction is

$$h=\frac{\cdot042\times9\cdot6^2\times1225}{2g\,.\,\frac{5}{12}}$$

$$=176\cdot4 \text{ feet.}$$

The total lift is therefore

$$220+176\cdot4=396\cdot4 \text{ feet.}$$

The weight of water lifted per minute is

$$\frac{\pi}{4}\cdot\frac{15''}{12}\,.\,80\times62\cdot5 \text{ lbs.}=4900 \text{ lbs.}$$

Therefore, $$\text{HP}=\frac{4900\times396\cdot4}{33{,}000}=58\cdot8.$$

Example (3). If in example (2) the air vessel is near the pump and the mean level of the water in the vessel is to be kept at 2 feet above the centre of the pump, find the pressure per sq. inch in the air vessel.

The head at the junction of the air vessel and the supply pipe is the head necessary to lift the water 207 feet and overcome the friction of the pipe.

Therefore, $$H_v+2'=207+176\cdot4,$$

$$H_v=381\cdot4 \text{ feet,}$$

$$p=\frac{381\cdot4\times62\cdot5}{144}$$

$$=165 \text{ lbs. per sq. inch.}$$

Example (4). A single acting hydraulic motor making 50 strokes per minute has a cylinder 8 inches diameter and the length of the stroke is 12 inches. The diameter of the supply pipe is 3 inches and it is 500 feet long. The motor is supplied with water from an accumulator, see Fig. 339, at a constant pressure of 300 lbs. per sq. inch.

Neglecting the mass of water in the cylinder, and assuming the piston moves with simple harmonic motion, find the pressure on the piston at the beginning and the centre of its stroke. The student should draw a diagram of pressure for one stroke.

There are 25 useful strokes per minute and the volume of water supplied per minute is, therefore,

$$25\,.\,\frac{\pi}{4}d^2=8\cdot725 \text{ cubic feet.}$$

At the commencement of the stroke the acceleration is $\pi^2\frac{50^2}{60^2}r$, and the velocity in the supply pipe is zero.

The head required to accelerate the water in the pipe is, therefore,

$$h_a = \frac{\pi^2 . 50^2 . 1 . 8^2 . 500}{60^2 . 2 . 3^2 . 32}$$

$$= 380 \text{ feet,}$$

which is equivalent to 165 lbs. per sq. inch.

The effective pressure on the piston is therefore 135 lbs. per sq. inch.

At the end of the stroke the effective pressure on the piston is 465 lbs. per sq. inch.

At the middle of the stroke the acceleration is zero and the velocity of the piston is

$$\tfrac{50}{60}\pi r = 1{\cdot}31 \text{ feet per second.}$$

The friction head is then

$$h = \frac{{\cdot}04 . 1{\cdot}31^2 . 8^4 . 500'}{2g . 3^4 . \frac{1}{4}}$$

$$= 108 \text{ feet.}$$

The pressure on the plunger at the middle of the stroke is

$$300 \text{ lbs.} - \frac{108 \times 62{\cdot}4}{144} = 253 \text{ lbs. per sq. inch.}$$

The mean friction head during the stroke is $\frac{2}{3} . 108 = 72$ feet, and the mean loss of pressure is 31 3 lbs per sq. inch.

The work lost by friction in the supply pipe per stroke is $31{\cdot}3 . \frac{\pi}{4} . 8^2 . l_s$

$$= 1570 \text{ ft. lbs.}$$

The work lost per minute = 39250 ft. lbs.

The net work done per minute neglecting other losses is

$$(300 \text{ lbs.} - 31{\cdot}3) . \frac{\pi}{4} . l_s . 8^2 . 25$$

$$= 337{,}700 \text{ ft. lbs.,}$$

and therefore the work lost by friction is about 10·4 per cent. of the energy supplied.

Other causes of loss in this case are, the loss of head due to shock where the water enters the cylinder, and losses due to bends and contraction at the valves.

It can safely be asserted that, at any instant, a head equal to the velocity head of the water in the pipe, will be lost by shock at the valves, and a similar quantity at the entrance to the cylinder These quantities are however always small, and even if there are bends along the pipe, which cause a further loss of head equal to the velocity head, or even some multiple of it, the percentage loss of head will still be small, and the total hydraulic efficiency will be high.

This example shows clearly that power can be transmitted hydraulically efficiently over comparatively long distances.

263. High pressure plunger pump.

Fig. 323 shows a section through a high pressure pump suitable for pressures of 700 or 800 lbs. per sq. inch.

Suction takes place on the outward stroke of the plunger, and delivery on both strokes.

A brass liner is fitted in the cylinder and the plunger which, as shown, is larger in diameter at the right end than at the left, is also made of brass; the piston rod is of steel. Hemp packing is used to prevent leakage past the piston and also in the gland box.

The plunger may have leather packing as in Fig. 324.

On the outward stroke neglecting slip the volume of water

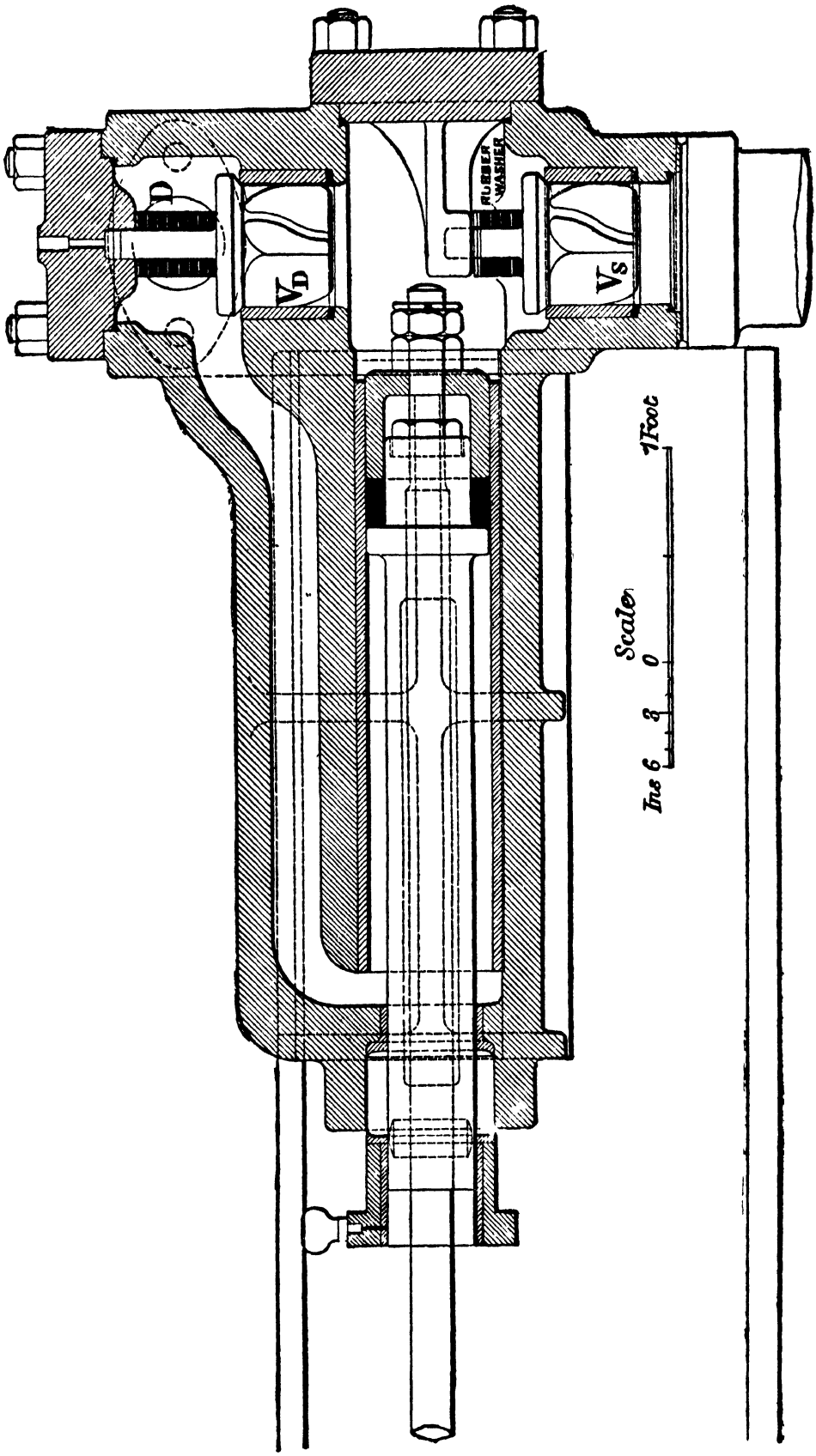

Fig 323. High pressure Double Acting Pump.

drawn into the cylinder is $\frac{\pi}{4}D_0^2 . L$ cubic feet, D_0 being the diameter of the piston and L the length of the stroke. The quantity of water forced into the delivery pipe through the valve V_D is

$$\frac{\pi}{4}(D_0^2 - d^2)\,L \text{ cubic feet,}$$

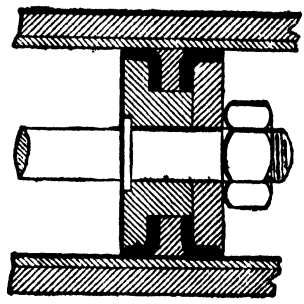

Fig. 324.

d being the diameter of the small part of the plunger.

On the in-stroke, the suction valve is closed and water is forced through the delivery valve; part of this water enters the delivery pipe and part flows behind the piston through the port P.

The amount that flows into the delivery pipe is

$$\frac{\pi}{4}L\{D_0^2 - (D_0^2 - d^2)\} = \frac{\pi}{4}d^2L.$$

If, therefore, $(D_0^2 - d^2)$ is made equal to d^2, or D_0 is $\sqrt{2}d$, the delivery, during each stroke, is $\frac{\pi}{8}D_0^2L$ cubic feet, and if there are n strokes per minute, the delivery is $42{\cdot}45D_0^2Ln$ gallons per minute.

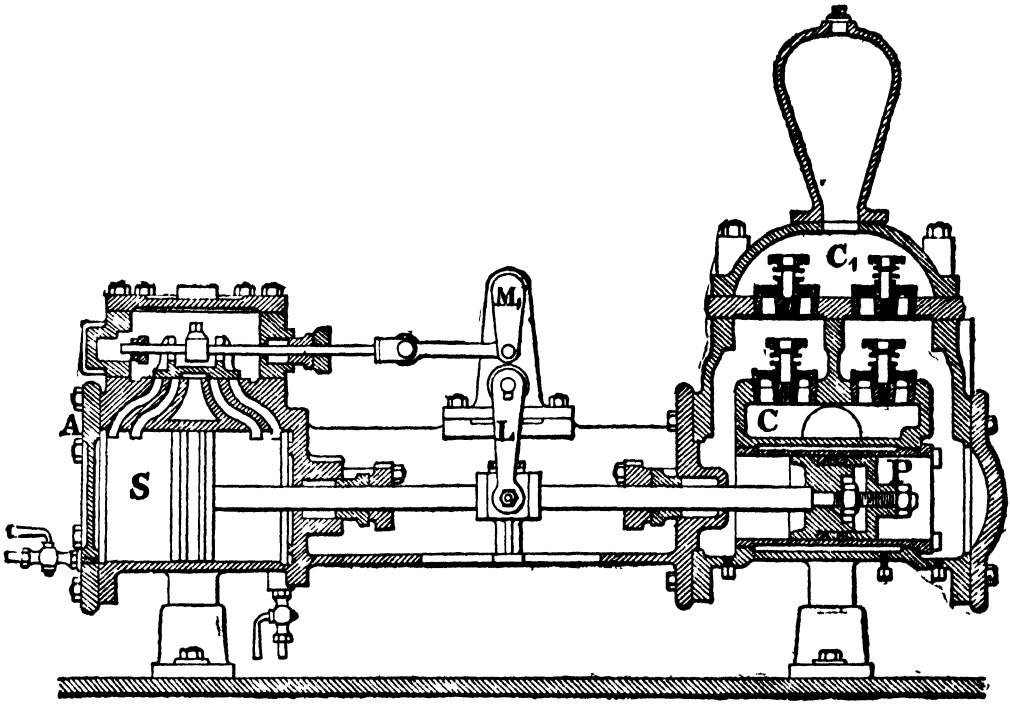

Fig. 325. Tangye Duplex Pump.

264. Duplex feed pump.

Fig. 325 shows a section through one pump and steam cylinder of a Tangye double-acting pump.

There are two steam cylinders side by side, one of which only is shown, and two pump cylinders in line with the steam cylinders.

In the pump the two lower valves are suction valves and the two upper delivery valves. As the pump piston P moves to the right, the left-hand lower valve opens and water is drawn into the pump from the suction chamber C. During this stroke the right upper valve is open, and water is delivered into the delivery C_1. When the piston moves to the left, the water is drawn in through the lower right valve and delivered through the upper left valve.

The steam engine has double ports at each end. As the piston approaches the end of its stroke the steam valve, Fig. 326, is at rest and covers the steam port 1 while the inner steam port 2 is open to exhaust. When the piston passes the steam port 2, the steam enclosed in the cylinder acts as a cushion and brings the piston and plunger gradually to rest.

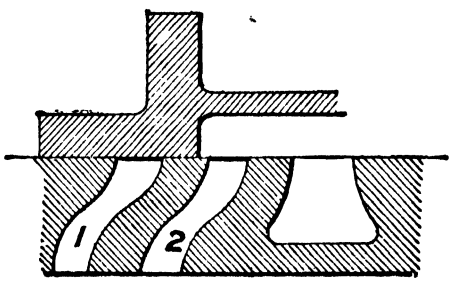

Fig. 326.

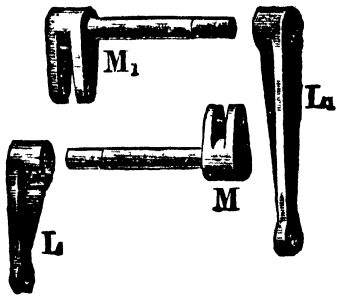

Fig 327.

Let the one engine and pump shown in section be called A and the other engine and pump, not shown, be called B.

As the piston of A moves from right to left, the lever L, Figs. 325 and 327, rotates a spindle to the other end of which is fixed a crank M, which moves the valve of the cylinder B from left to right and opens the left port of the cylinder B. Just before the piston of A reaches the left end of its stroke, the piston of B, therefore, commences its stroke from left to right, and by a lever L_1 and crank M_1 moves the valve of cylinder A also from left to right, and the piston of A can then commence its return stroke. It should be noted that while the piston of A is moving, that of B is practically at rest, and *vice versa.*

265. The hydraulic ram.

The hydraulic ram is a machine which utilises the momentum of a stream of water falling a small height to raise a part of the water to a greater height.

In the arrangement shown in Fig. 328 water is supplied from a tank, or stream, through a pipe A into a chamber B, which has two

valves V and V_1. When no flow is taking place the valve V falls off its seating and the valve V_1 rests on its seating. If water is allowed to flow along the pipe A it will escape through the open valve V. The contraction of the jet through the valve opening, exactly as in the case of the plate obstructing the flow in a pipe, page 168, causes the pressure to be greater on the under face of the valve, and when the pressure is sufficiently large the valve will commence to close. As it closes the pressure will increase and the rate of closing will be continually accelerated. The rapid closing of the valve arrests the motion of the water in the pipe, and there is a sudden rise in pressure in B, which causes the valve V_1 to open, and a portion of the water passes into the air vessel C. The water in the supply pipe and in the vessel B, after being brought to rest, recoils, like a ball thrown against a wall, and the pressure in the vessel is again diminished, allowing the water to once more escape through the valve V. The cycle of operations is then repeated, more water being forced into the air chamber C, in which the air is compressed, and water is forced up the delivery pipe to any desired height.

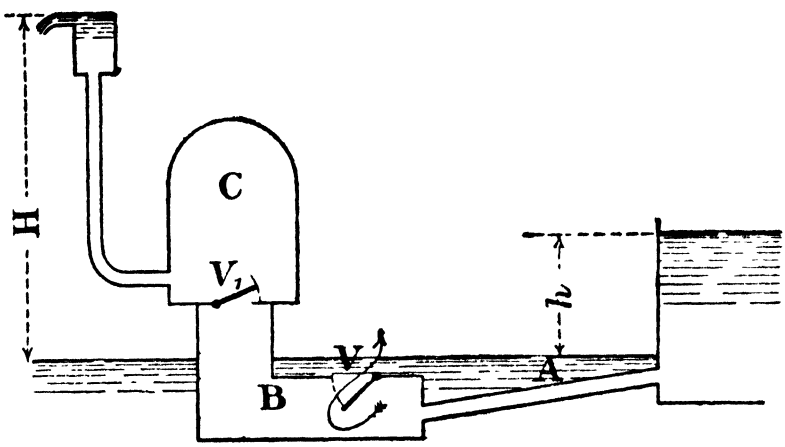

Fig. 328.

Let h be the height the water falls to the ram, H the height to which the water is lifted.

If W lbs. of water descend the pipe per second, the work available per second is Wh foot lbs., and if e is the efficiency of the ram, the weight of water lifted through a height H will be

$$w = \frac{e \,.\, W \,.\, h}{H}.$$

The efficiency e diminishes as H increases and may be taken as 60 per cent. at high heads. (See Appendix, page 561.)

Fig. 329 shows a section through the De Cours hydraulic ram, the valves of which are controlled by springs. The springs

can be regulated so that the number of beats per minute is completely under control, and can be readily adjusted to suit varying heads.

With this type of ram Messrs Bailey claim to have obtained at low heads, an efficiency of more than 90 per cent., and with H equal to $8h$ an efficiency of 80 per cent.

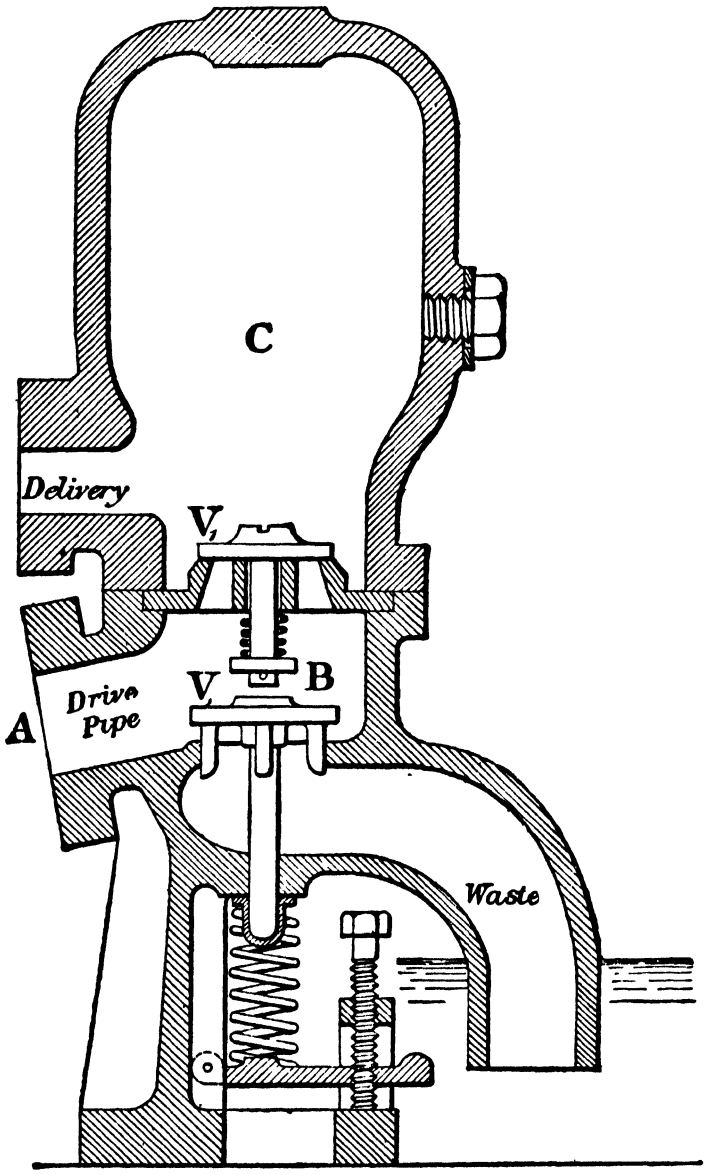

Fig. 329. De Cours Hydraulic Ram.

As the water escapes through the valve V_1 into the air vessel C, a little air should be taken with it to maintain the air pressure in C constant.

This is effected in the De Cours ram by allowing the end of the exhaust pipe F to be under water. At each closing of the valve

V, the siphon action of the water escaping from the discharge causes air to be drawn in past the spindle of the valve. A cushion of air is thus formed in the box B every stroke, and some of this air is carried into C when the valve V_1 opens.

The extreme simplicity of the hydraulic ram, together with the ease with which it can be adjusted to work with varying quantities of water, render it particularly suitable for pumping in out-of-the-way places, and for supplying water, for fountains and domestic purposes, to country houses situated near a stream.

266. Lifting water by compressed air.

A very simple method of raising water from deep wells is by means of compressed air. A delivery pipe is sunk into a well, the open end of the pipe being placed at a considerable distance below the surface of the water in the well.

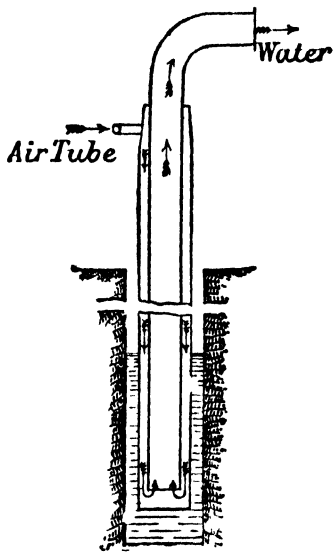

Fig. 330A.

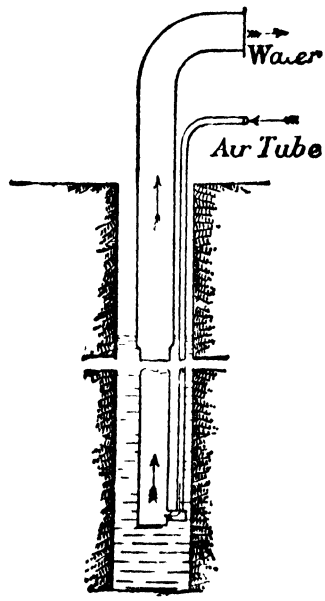

Fig. 330B.

In the arrangement shown in Fig. 330A, there is surrounding the delivery tube a pipe of larger diameter into which air is pumped by a compressor. The air rises up the delivery pipe carrying with it a quantity of water. An alternative arrangement is shown in Fig. 330B. Whether the air acts as a piston and pushes the water in front of it, or forms a mixture with the water*, depends very largely upon the rate at which air is supplied to the pump.

In the pump experimented upon by Kelly, at certain rates of working the discharge was continuous, the air and the water being mixed together, while at low discharges the action was intermittent and the pump worked in a definite cycle; the discharge commenced

* Kelly, *Proc. Inst. C. E.* Vol. CLXIII.

slowly; the velocity then gradually increased until the pipe discharged full bore; this was followed by a rush of air, after which the flow gradually diminished and finally stopped; after a period of no flow the cycle commenced again. When the rate at which air was supplied was further diminished, the water rose up the delivery tube, but not sufficiently high to overflow, and the air escaped without doing useful work.

The efficiency of these pumps is very low and only in exceptional cases does it reach 50 per cent. The volume v of air, in cubic feet, at atmospheric pressure, required to lift one cubic foot of water through a height h depends upon the efficiency. With an efficiency of 30 per cent. it is approximately $v=\frac{h}{20}$, and with an efficiency of 40 per cent. $v=\frac{h}{25}$ approximately.

It is necessary that the lower end of the delivery be at a greater distance below the surface of the water in the well, than the height of the lift above the free surface, and the well has consequently to be made very deep.

On the other hand the well is much smaller in diameter than would be required for reciprocating or centrifugal pumps, and the initial cost of constructing the well per foot length is much less.

266A. The Humphrey internal combustion pump.

An ingenious, and what promises to be a very efficient pump has recently been developed by Mr H. A. Humphrey, which is both simple in principle and in construction. The force necessary for the raising of the water being obtained by the explosion of a combustible mixture in a vessel above the surface of the water in the vessel. All rotating and reciprocating parts found in ordinary pumps are dispensed with. The idea of exploding such a mixture in contact with the water did not originate with Mr Humphrey, but the credit must remain with him of having evolved on a large scale a successful pump and of having overcome the serious difficulties to be faced in an ingenious and satisfactory manner.

The pump in its simplest form is shown in Fig. 331 A. C is a combustion chamber, into which is admitted the combustible charge through the valve F. E is the exhaust valve. These two valves are connected by an interlocking* gear, so arranged that when the admission opens and closes it locks itself shut and unlocks the exhaust valve ready for the next exhaust stroke. When the exhaust valve closes it locks itself, and releases the

* *Proc. Inst. Mech. Engs.* 1910.

admission valve, which is then ready to admit a fresh charge, when the suction stroke occurs. A sparking plug, not shown in the figure, is used to explode the combustible mixture.

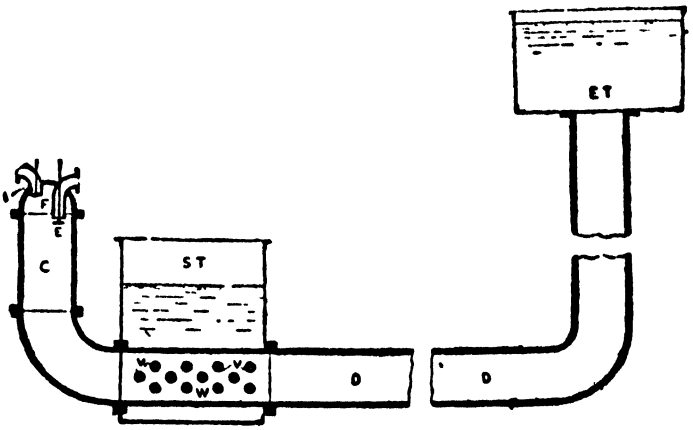

Fig. 331 A.

The delivery pipe D is connected directly to the combustion chamber C and to the supply tank ET. W is the water valve box having a number of small valves V, instead of one big one, opening inwards, each held on its seat by a light spring, and through which water enters the delivery pipe from the supply tank. Suppose a compressed charge to be enclosed in the chamber C and fired by a spark. The increase of pressure sets the water in C and in the pipe D in motion, a quantity of water entering the tank ET. The velocity of the water in D increases as long as the pressure of the gases in C is greater than the head against which the pump is delivering together with the head lost by friction, etc.

Referring to the diagram, Fig. 331 A, let h be the head of water, supposed for simplicity constant, against which the pump is delivering; let H be the atmospheric pressure in feet of water, and p the pressure per sq. foot at any instant in the combustion chamber. Let v be the velocity of the column of water at any instant, and let the friction head plus the head lost by eddies as the water enters the supply tank at this velocity be $\frac{Fv^2}{2g}$. As long as $\frac{p}{w}$ is greater than $H+h+\frac{Fv^2}{2g}$ the mass of water in D will be accelerated positively and the maximum velocity v_m of the water will be reached when

$$\frac{p}{w}=H+h+\frac{Fv_m^2}{2g}.$$

The water will have acquired a kinetic energy per lb. equal to $\frac{v_m^2}{2g}$, and will continue its motion towards the tank. As it does so

the pressure in C falls below the atmospheric pressure and the exhaust valve E opens. The pressure in C plus the height of the surface of the water in C above the centre of W will give the pressure in W, and when this is less than the atmospheric pressure plus the head of water in ST the valves V will open and allow water to enter D.

When the kinetic energy of the moving column has expended itself by forcing water into the tank ST, the water will begin to return and will rise in the chamber C until the surface hits the valve E and shuts the exhaust, the exhaust valve becoming locked as explained above while the inlet valve is released, and is ready to open when the pressure in C falls below the atmospheric pressure. A portion of the burnt gases is enclosed in the upper part of C, and the energy of the returning column is used to compress this gas to a pressure which is greater than $h+H$. When the column is again brought to rest a second movement of the column of water towards D takes place, the pressure in C falling again below the atmospheric pressure and a fresh charge of gas and air is drawn in. Again the column begins to return and compresses the mixture to a pressure much greater than that due to the static head, when it is ignited and a fresh cycle begins.

The action of the pump is unaltered if it discharges into an air vessel, Fig. 331 B, instead of into an elevated tank, this arrangement being useful when a continuous flow is required.

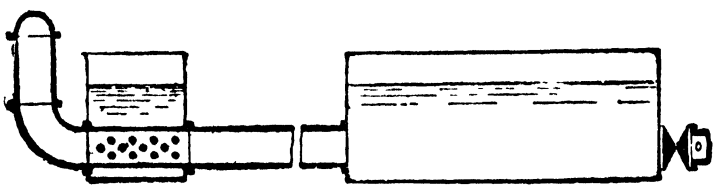

Fig. 331 B.

Figs. 332 A and 332 B show other arrangements of the pump. In the two papers cited above other types and modifications of the cycle of operations for single and two barrel pumps are described, showing that the pump can be adapted to almost any conditions without difficulty.

An important feature of the pump is in the use that is made of the "fly-wheel" effect of the moving column of water to give high compression, which is a necessity for the efficient working of an internal combustion engine*.

* See works on gas and oil engines.

To start the pump from rest, a charge of air is pumped into the chamber C by a hand pump or small compressor, and the exhaust valve is opened by hand. This starts the oscillation of the column, which closes the exhaust valve, and compresses the air enclosed in the clearance.

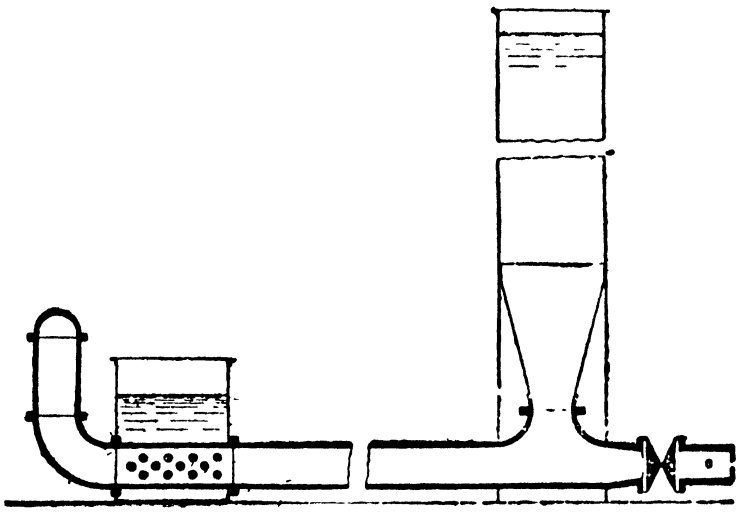

Fig. 332A.

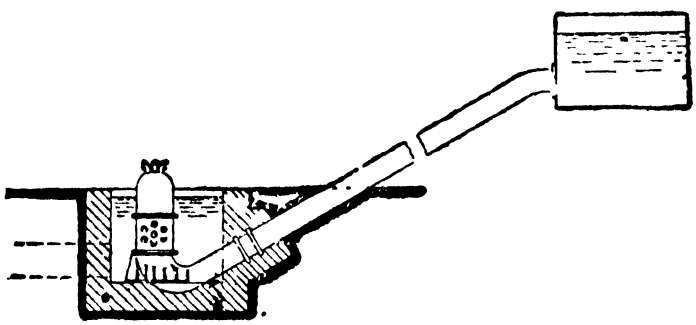

Fig. 332B.

This compressed air expands below the atmospheric pressure and a charge of gas and air is drawn into the cylinder, which is compressed and ignited and the cycles are commenced.

For a given set of conditions the length of the discharge pipe is important in determining the periodicity of the cycles and thus the discharge of the pump.

Let the volume of gases when explosion takes place (Fig. 332C) be p_0 lbs. per sq. foot absolute, and let the volume occupied by the gases be V_0 cubic feet. Let A be the cross-sectional area of the explosion chamber, h the head against which the pump works in feet of water, H the atmospheric pressure in feet of water. Let the delivery pipe be of length L and of the same diameter as the explosion chamber. As the expansion of the gases takes place let the law of expansion be $pV^n = \text{constant}$.

The volume V of the expanding gases when the surface of the water has moved a distance x will be $V_1 = V_0 + Ax$ and the pressure will be $p_1 = \frac{p_0 V_0^n}{(V_0 + Ax)^n}$.

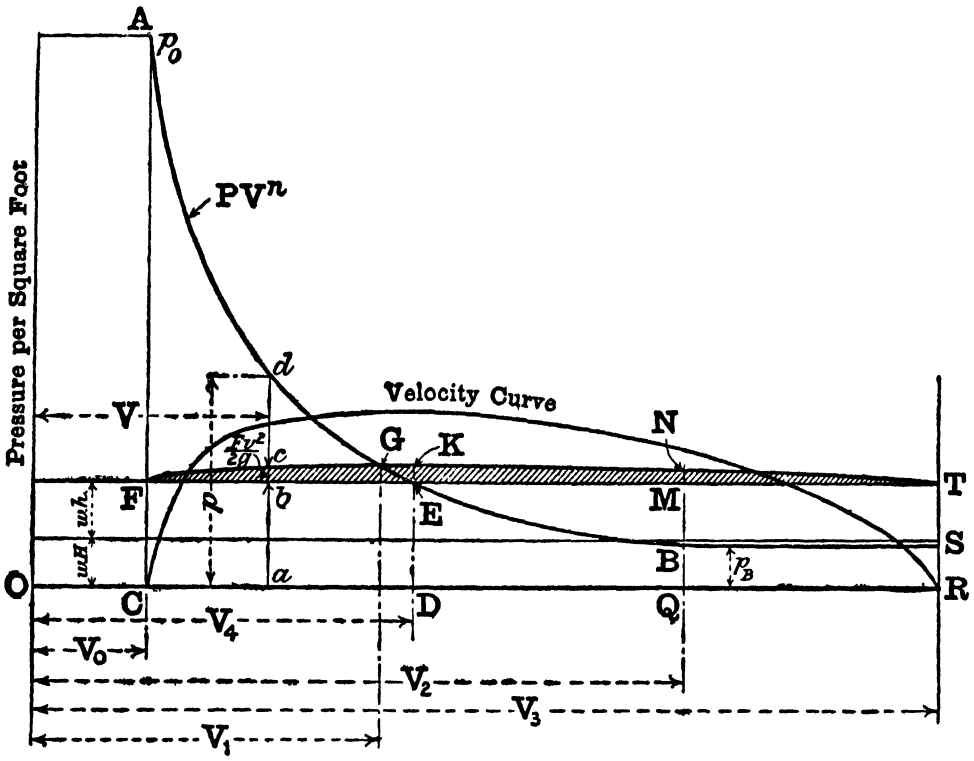

Fig. 332c.

If p is the pressure at any instant during expansion the work done by the expanding gases is

$$A\int_{V_0}^{V_1} p\,dx = \frac{p_0 V_0 - p_1 V_1}{n-1}.$$

This energy has had to give kinetic energy to the water in the pipe, to lift a quantity of water equal to Ax into the tank, and to overcome friction. If the delivery pipe is not bell-mouthed the water as it enters the tank with a velocity v will have kinetic energy per lb. of $\frac{v^2}{2g}$ ft. lbs.

The kinetic energy of the water in the pipe at any velocity v is

$$\frac{wLAv^2}{2g}.$$

Let the friction head at any velocity be $h_f = \frac{F_1 v^2}{2g}$.

Then

$$\frac{wLAv^2}{2g} = \int_0^x pA\,dx - w\,(h + H)\,A\,dx - \frac{F_1 w\,.\,Av^2}{2g}\,.\,dx - \frac{w\,.\,Av^2 dx}{2g} \quad \ldots(1).$$

Or from the diagram let AB be the expansion curve of the exploded gases. Let h be the head against which the pump is lifting, and H the atmospheric pressure expressed in feet of water. If there is no friction in the pump, or other losses of head, the pressure in the chamber becomes equal to the absolute head against which water is being pumped when the volume is V_4.

Up to this point the velocity of the water is being increased, and

$$\frac{w \,.\, \mathrm{AL} \,.\, v_4^2}{2g} = \text{area AFE}.$$

The actual velocity will be less than v_4 as calculated from this formula, due to the losses of head.

Let it be assumed that the total loss of energy per lb. at any velocity v is $\frac{\mathrm{F}v^2}{2g}$, this including frictional losses and losses by eddy motions as the water enters the supply tank.

Then if EK be made equal to

$$\frac{\mathrm{F}v_4^2}{2g}$$

and the parabolic arc FK be drawn, the frictional head at any other volume will be approximately bc. The curve AB now cuts the curve FK at G, and V_1 is a nearer approximation to the volume at which the maximum velocity occurs.

Let v_m be this maximum velocity.

Then $$\frac{w\mathrm{AL}v_m^2}{2g} = \mathrm{AF}c\mathrm{G}.$$

The friction head can now be corrected if thought desirable and v_m re-calculated. At any volume V the velocity is given by

$$\frac{w\mathrm{AL}v^2}{2g} = \mathrm{AF}cd.$$

Let the exhaust valve be supposed to open when the pressure falls to p_B (say 14·5 lbs. per sq. inch).

Then the velocity when the exhaust opens is given by

$$\frac{w\mathrm{AL}v_2^2}{2g} = \mathrm{ACQB} - \mathrm{CFGNQ}.$$

For further movements of the column of water the pressure remains constant, and if the energy of water entering through the valves V is neglected the water will come to rest when

$$\mathrm{ACQRSBA} = \mathrm{FGTRC},$$

or if the mean loss of head is taken as $\frac{2}{3}$ of the maximum, when

$$\frac{p_0\mathrm{V}_0 - p_2\mathrm{V}_2}{n-1} + p_B\,(\mathrm{V}_3 - \mathrm{V}_2) = (\mathrm{V}_3 - \mathrm{V}_0)\left(wh + w\mathrm{H} + \tfrac{2}{3}\frac{\mathrm{F}v^2}{2g}\right).$$

From this equation V_s can be calculated or by trial the two areas can be made equal.

By calculating the velocity at various points along the stroke a velocity curve, as shown in the figure, can be drawn.

The time taken for the stroke CR can then be found by dividing the length $\frac{V_s - V_0}{A}$ by the mean ordinate of the velocity diagram.

On the return cushioning stroke the exhaust valve will close when the volume V_s is reached and the gases in the cylinder will then be compressed. The compression curve can be drawn and the velocities at the various points in the stroke calculated. The velocity at B for instance in the return stroke will be approximately given by

$$\frac{wALv_B^2}{2g} = \text{BMTS} - \text{NMT},$$

the area NMT being subtracted because friction will act in opposition to the head h which is creating the velocity.

EXAMPLES.

(1) A double-acting plunger pump has a piston 6 inches diameter and the length of the strokes is 12 inches. The gross head is 500 feet, and the pump makes 80 strokes per minute. Assuming no slip, find the discharge and horse-power of the pump. Find also the necessary diameter for the steam cylinder of an engine driving the pump direct, assuming the steam pressure is 100 lbs. per square inch, and the mechanical efficiency of the combination is 85 per cent.

(2) A plunger pump is placed above a tank containing water at a temperature of 200° F. The weight of the suction valve is 2 lbs. and its diameter $1\frac{1}{2}$ inches. Find the maximum height above the tank at which the pump may be placed so that it will draw water, the barometer standing at 30 inches and the pump being assumed perfect and without clearance. (The vapour tension of water at 200° F. is about 11·6 lbs. per sq. inch.)

(3) A pump cylinder is 8 inches diameter and the stroke of the plunger is one foot. Calculate the maximum velocity, and the acceleration of the

water in the suction and delivery pipes, assuming their respective diameters to be 7 inches and 5 inches, the motion of the piston to be simple harmonic, and the piston to make 36 strokes per minute.

(4) Taking the data of question (3) calculate the work done on the suction stroke of the pump,

(1) neglecting the friction in the suction pipe,

(2) including the friction in the suction pipe and assuming that the suction pipe is 25 feet long and that $f=0{\cdot}01$.

The height of the centre of the pump above the water in the sump is 18 feet.

(5) If the pump in question (4) delivers into a rising main against a head of 120 feet, and if the length of the main itself is 250 feet, find the total work done per revolution. Assuming the pump to be double acting, find the I.H.P. required to drive the pump, the efficiency being ·72 and no slip in the pump. Find the delivery of the pump, assuming a slip of 5 per cent.

(6) The piston of a pump moves with simple harmonic motion, and it is driven at 40 strokes per minute. The stroke is one foot. The suction pipe is 25 feet long, and the suction valve is 19 feet above the surface of the water in the sump. Find the ratio between the diameter of the suction pipe and the pump cylinder, so that no separation may take place at the dead points. Water barometer 34 feet.

(7) Two double-acting pumps deliver water into a main without an air vessel. Each is driven by an engine with a fly-wheel heavy enough to keep the speed of rotation uniform, and the connecting rods are very long.

Let Q be the mean delivery of the pumps per second, Q_1 the quantity of water in the main. Find the pressure due to acceleration (*a*) at the beginning of a stroke when one pump is delivering water, (*b*) at the beginning of the stroke of one of two double-acting pumps driven by cranks at right angles when both are delivering. When is the acceleration zero?

(8) A double-acting horizontal pump has a piston 6 inches diameter (the diameter of the piston rod is neglected) and the stroke is one foot. The water is pumped to a height of 250 feet along a delivery pipe 450 feet long and $4\frac{1}{2}$ inches diameter. An air vessel is put on the delivery pipe 10 feet from the delivery valve.

Find the pressure on the pump piston at the two ends of the stroke when the pump is making 40 strokes per minute, assuming the piston moves with simple harmonic motion and compare these pressures with the pressures when there is no air vessel. $f=\cdot0075$.

(9) A single acting hydraulic motor makes 160 strokes per minute and moves with simple harmonic motion.

The motor is supplied with water from an accumulator in which the pressure is maintained at 200 lbs. per square inch.

The cylinder is 8 inches diameter and 12 inches stroke. The delivery pipe is 200 feet long, and the coefficient, which includes loss at bends, etc. may be taken as $f=0{\cdot}2$.

Neglecting the mass of the reciprocating parts and of the variable quantity of water in the cylinder, draw a curve of effective pressure on the piston.

(10) The suction pipe of a plunger pump is 35 feet long and 4 inches diameter, the diameter of the plunger is 6 inches and the stroke 1 foot.

The delivery pipe is $2\frac{1}{2}$ inches diameter, 90 feet long, and the head at the delivery valve is 40 feet. There is no air vessel on the pump. The centre of the pump is 12 feet 6 inches above the level of the water in the sump.

Assuming the plunger moves with simple harmonic motion and makes 50 strokes per minute, draw the theoretical diagram for the pump.

Neglect the effect of the variable quantity of water in the cylinder and the loss of head at the valves.

(11) Will separation take place anywhere in the delivery pipe of the pump, the data of which is given in question (10), if the pipe first runs horizontally for 50 feet and then vertically for 40, or rises 40 feet immediately from the pump and then runs horizontally for 50 feet, and separation takes place when the pressure head falls below 5 feet?

(12) A pump has three single-acting plungers $29\frac{1}{4}$ inches diameter driven by cranks at 120 degrees with each other. The stroke is 5 feet and the number of strokes per minute 40. The suction is 16 feet and the length of the suction pipe is 22 feet. The delivery pipe is 3 feet diameter and 350 feet long. The head at the delivery valve is 214 feet.

Find (*a*) the minimum diameter of the suction pipe so that there is no separation, assuming no air vessel and that separation takes place when the pressure becomes zero.

(*b*) The horse-power of the pump when there is an air vessel on the delivery very near to the pump. $f = \cdot 007$.

[The student should draw out three cosine curves differing in phase by 120 degrees. Then remembering that the pump is single acting, the resultant curve of accelerations will be found to have maximum positive and also negative values of $\frac{\omega^2 r \,.\, A}{2a}$ every 60 degrees. The maximum acceleration head is then $h_a = \pm \frac{\omega^2 r \,.\, AL}{2ga}$.

For no separation, therefore, $a = \frac{4\pi^2 rLA}{18g\,(34-16)}$.]

(13) The piston of a double-acting pump is 5 inches in diameter and the stroke is 1 foot. The delivery pipe is 4 inches diameter and 400 feet long and it is fitted with an air vessel 8 feet from the pump cylinder. The water is pumped to a height of 150 feet. Assuming that the motion of the piston is simple harmonic, find the pressure per square inch on the piston at the beginning and middle of its stroke and the horse-power of the pump when it makes 80 strokes per minute. Neglect the effect of the variable quantity of water in the cylinder. Lond. Un. 1906.

(14) The plunger of a pump moves with simple harmonic motion. Find the condition that separation shall not take place on the suction stroke and show why the speed of the pump may be increased if an air vessel is put in the suction pipe. Sketch an indicator diagram showing separation. Explain "negative slip." Lond. Un. 1906.

(15) In a single-acting force pump, the diameter of the plunger is 4 inches, stroke 6 inches, length of suction pipe 63 feet, diameter of suction pipe $2\frac{7}{8}$ inches, suction head 0·07 ft. When going at 10 revolutions per minute, it is found that the average loss of head per stroke between the suction tank and plunger cylinder is 0·23 ft. Assuming that the frictional losses vary as the square of the speed, find the absolute head on the suction side of the plunger at the two ends and at the middle of the stroke, the revolutions being 50 per minute, and the barometric head 34 feet. Draw a diagram of pressures on the plunger—simple harmonic motion being assumed. Lond. Un. 1906.

(16) A single-acting pump without an air vessel has a stroke of $7\frac{1}{2}$ inches. The diameter of the plunger is 4 inches and of the suction pipe $3\frac{1}{8}$ inches. The length of the suction pipe is 12 feet, and the centre of the pump is 9 feet above the level in the sump.

Determine the number of single strokes per second at which theoretically separation will take place, and explain why separation will actually take place when the number of strokes is less than the calculated value.

(17) Explain carefully the use of an air vessel in the delivery pipe of a pump. The pump of question (16) makes 100 single strokes per minute, and delivers water to a height of 100 feet above the water in the well through a delivery pipe 1000 feet long and 2 inches diameter. Large air vessels being put on the suction and delivery pipes near to the pump.

On the assumption that all losses of head other than by friction in the delivery pipe are neglected, determine the horse-power of the pump. There is no slip.

(18) A pump plunger has an acceleration of 8 feet per second per second when at the end of the stroke, and the sectional area of the plunger is twice the sectional area of the delivery pipe. The delivery pipe is 152 feet long. It runs from the pump horizontally for a length of 45 feet, then vertically for 40 feet, then rises 5 feet, on a slope of 1 vertical to 8 horizontal, and finally runs in a horizontal direction.

Find whether separation will take place, and if so at which section of the pipe, if it be assumed that separation takes place when the pressure head in the pipe becomes 7 feet.

(19) A pump of the duplex kind, Fig. 325, in which the steam piston is connected directly to the pump piston, works against a head of h feet of water, the head being supplied by a column of water in the delivery pipe. The piston area is A_0, the plunger area A, the delivery pipe area a, the length of the delivery pipe l and the constant steam pressure on the piston p_0 lbs. per square foot. The hydraulic resistance may be represented by $\frac{Fv^2}{2g}$, v being the velocity of the plunger and F a coefficient.

Show that when the plunger has moved a distance x from the beginning of the stroke

$$v^2=\frac{2g}{F}\left(\frac{p_0A_0}{wA}-h\right)(1-e^{-\frac{Fax}{lA}}).$$ Lond. Un. 1906.

Let the piston be supposed in any position and let it have a velocity v. Then the velocity of the plunger is v and the velocity of the water in the pipe is $\frac{v\,.\,A}{a}$. The kinetic energy of the water in the pipe at this velocity is

$$\frac{wlav^2A^2}{2g\,.\,a^2}\text{ ft. lbs.}$$

If now the plunger moves through a distance dx, the work done by the steam is $p_0A_0\,dx$ ft. lbs.; the work done in lifting water is $w\,.\,h\,.\,A\,dx$; the work done by friction is $\frac{Fv^2}{2g}w\,.\,A\,dx$; and, therefore,

$$\frac{wlv^2A^2}{2ga}=\int_0^x p_0A_0dx-whA\,dx-\frac{Fv^2}{2g}w\,.\,A\,dx.$$

Differentiating

$$\frac{wlA^2}{a}\frac{d}{dx}\left(\frac{v^2}{2g}\right)=p_0A_0-whA-\frac{FwAv^2}{2g}.$$

Let $$\frac{v^2}{2g}=E,\quad \frac{wlA^2}{a}=Z \text{ and } FwA=f.$$

Then $$fE+Z\frac{dE}{dx}=p_0A_0-whA$$

or $$\frac{f}{Z}E+\frac{dE}{dx}=\frac{p_0A_0-whA}{Z}.$$

The solution of this equation is

$$E=\frac{p_0A_0-whA}{\frac{f}{Z}}(1-e^{-\frac{fx}{Z}})$$

$$=\frac{p_0A_0-whA}{FwA}(1-e^{-\frac{Fax}{lA}}).$$

(20) A pump valve of brass has a specific gravity of $8\frac{1}{2}$ with a lift of $\frac{1}{10}$ foot, the stroke of the piston being 4 feet, the head of water 40 feet and the ratio of the full valve area to the piston area one-fifth.

If the valve is neither assisted nor meets with any resistance to closing, find the time it will take to close and the "slip" due to this gradual closing. Time to close is given by formula, $S=\frac{1}{2}ft^2$. $f=\frac{7\cdot5}{8\cdot5}\times32\cdot2$. Lond. Un. 1906.

CHAPTER XII.

HYDRAULIC MACHINES.

267. Joints and packings used in hydraulic work.

The high pressures used in hydraulic machinery make it necessary to use special precautions in making joints.

Figs. 333 and 334 show methods of connecting two lengths of pipe. The arrangement shown in Fig. 333 is used for small

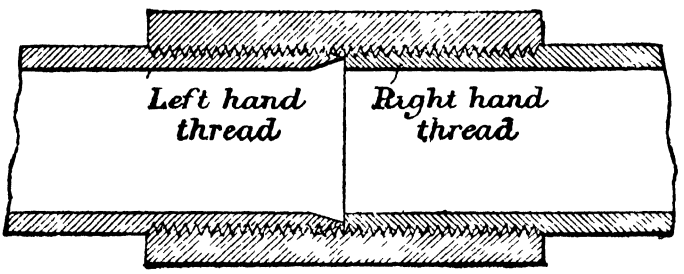

Fig. 333.

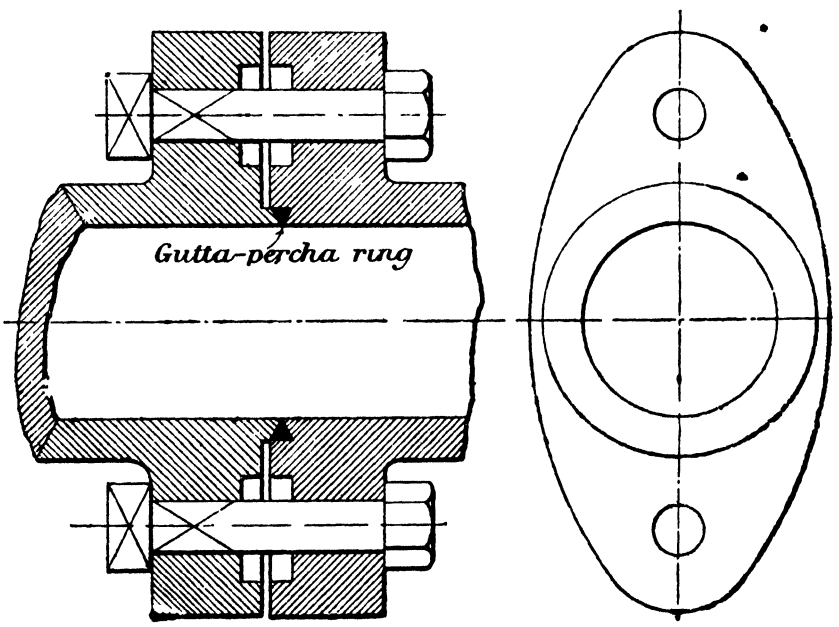

Fig. 334.

wrought-iron pipes, no packing being required. In Fig. 334 the packing material is a gutta-percha ring. Fig. 336 shows an ordinary socket joint for a cast-iron hydraulic main. To make the joint, a few cords of hemp or tarred rope are driven into the socket. Clay is then put round the outside of the socket and molten lead run in it. The lead is then jammed into the socket with a caulking tool. Fig. 335 shows various forms of packing leathers, the applications of which will be seen in the examples given of hydraulic machines.

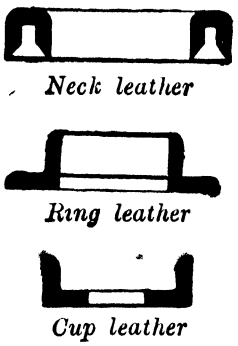

Fig. 335.

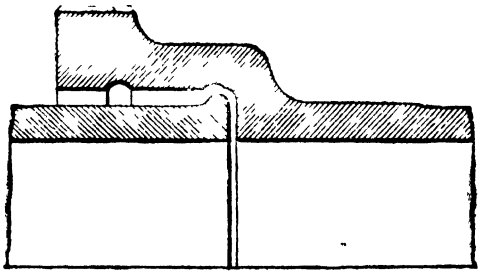

Fig 336.

Hemp twine, carefully plaited, and dipped in hot tallow, makes a good packing, when used in suitably designed glands (see Fig. 339) and is also very suitable for pump buckets, Fig. 323. Plaited Asbestos or cotton may be substituted for hemp, and metallic packings are also used as shown in Figs. 337 and 338.

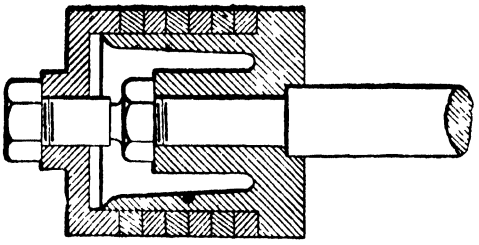

Fig. 337.

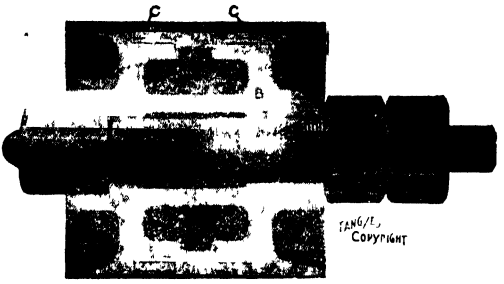

Fig. 338.

268. The accumulator.

The accumulator is a device used in connection with hydraulic machinery for storing energy.

In the form generally adopted in practice it consists of a long cylinder C, Fig. 339, in which slides a ram R and into which water is delivered from pumps. At the top of the ram is fixed a rigid cross head which carries, by means of the bolts, a large cylinder which can be filled with slag or other heavy material, or it may be loaded with cast-iron weights as in Fig. 340. The water is

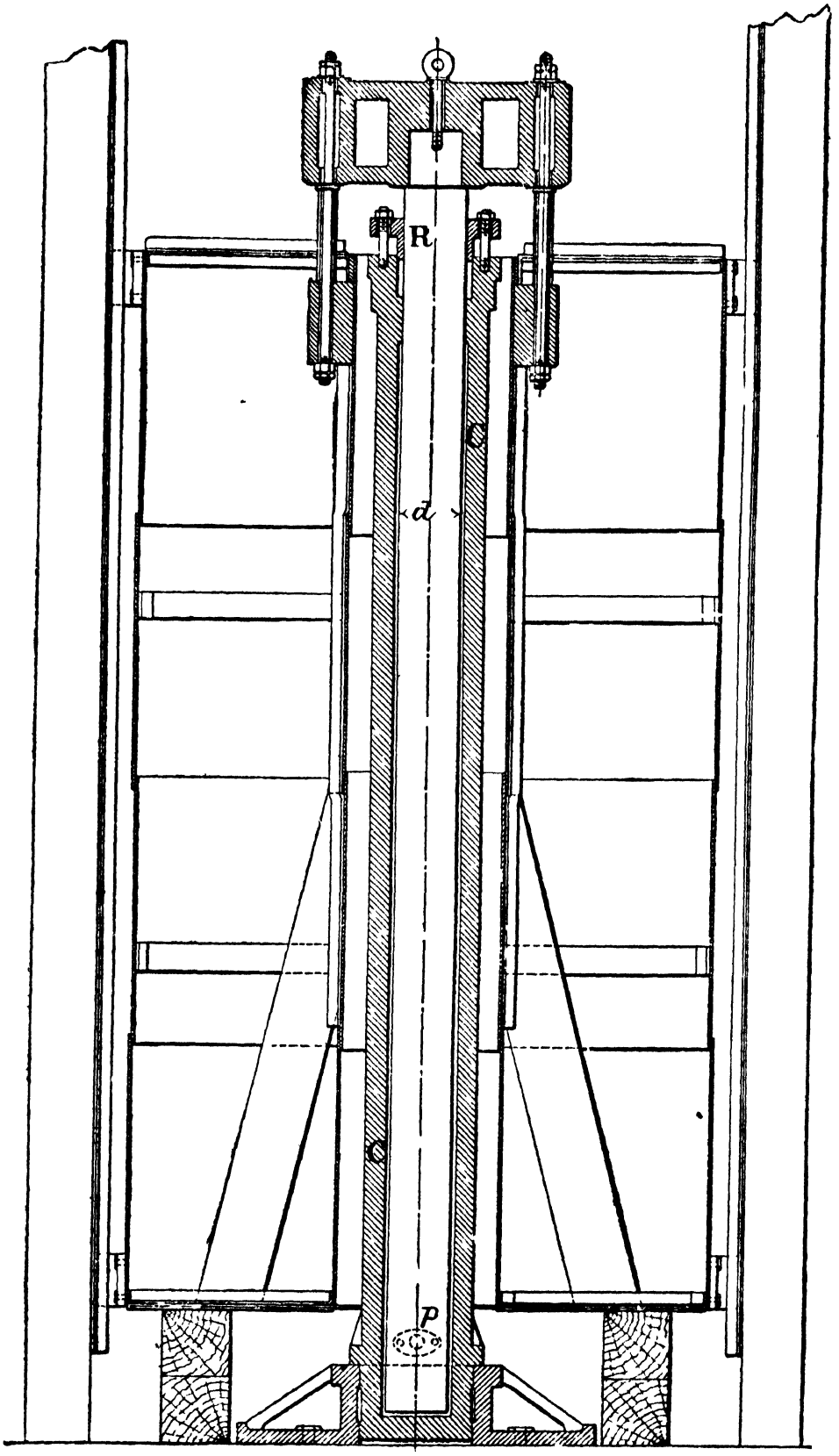

Fig. 339. Hydraulic Accumulator.

admitted to the cylinder at any desired pressures through a pipe connected to the cylinder by the flange shown dotted, and the weight is so adjusted that when the pressure per sq. inch in the cylinder is a given amount the ram rises.

If d is the diameter of the ram in inches, p the pressure in lbs. per sq. inch, and h the height in feet through which the ram can be lifted, the weight of the ram and its load is

$$W = p \cdot \frac{\pi}{4} d^2 \text{ lbs.},$$

and the energy that can be stored in the accumulator is

$$E = p \cdot \frac{\pi}{4} d^2 \cdot h \text{ foot lbs.}$$

The principal object of the accumulator is to allow hydraulic machines, or lifts, which are being supplied with hydraulic power from the pumps, to work for a short time at a much greater rate than the pumps can supply energy. If the pumps are connected directly to the machines the rate at which the pumps can supply energy must be equal to the rate at which the machines are working, together with the rate at which energy is being lost by friction, etc., and the pump must be of such a capacity as to supply energy at the greatest rate required by the machines, and the frictional resistances. If the pump supplies water to an accumulator, it can be kept working at a steady rate, and during the time when the demand is less than the pump supply, energy can be stored in the accumulator.

In addition to acting as a storer of energy, the accumulator acts as a pressure regulator and as an automatic arrangement for starting and stopping the pumps.

When the pumps are delivering into a long main, the demand upon which is varying, the sudden cutting off of the whole or a part of the demand may cause such a sudden rise in the pressure as to cause breakage of the pipe line, or damage to the pump. With an accumulator on the pipe line, unless the ram is descending and is suddenly brought to rest, the pressure cannot rise very much higher than the pressure p which will lift the ram.

To start and stop the pump automatically, the ram as it approaches the top of its stroke moves a lever connected to a chain which is led to a throttle valve on the steam pipe of the pumping engine, and thus shuts off steam. On the ram again falling below a certain level, it again moves the lever and opens the throttle valve. The engine is set in motion, pumping recommences, and the accumulator rises.

Example. A hydraulic crane working at a pressure of 700 lbs. per sq. inch has to lift 30 cwts. at a rate of 200 feet per minute through a height of 50 feet, once every 1½ minutes. The efficiency of the crane is 70 per cent. and an accumulator is provided.

Find the volume of the cylinder of the crane, the minimum horse-power for the pump, and the minimum capacity of the accumulator.

Let A be the sectional area of the ram of the crane cylinder in sq. feet and L the length of the stroke in feet.

Then, $$p \,.\, 144 \,.\, A \,.\, L \times 0{\cdot}70 = 30 \times 112 \times 50',$$

or $$AL = V = \frac{30 \times 112 \times 50}{0{\cdot}70 \times 144 \times 700}$$

$$= 2{\cdot}38 \text{ cubic feet.}$$

The rate of doing work in the lift cylinder is

$$\frac{112 \times 30 \times 200}{0{\cdot}7} = 960{,}000 \text{ ft. lbs. per minute,}$$

and the work done in lifting 50 feet is 240,000 ft lbs. Since this has to be done once every one and half minutes, the work the pump must supply in one and half minutes is at least 240,000 ft. lbs., and the minimum horse-power is

$$HP = \frac{240{,}000}{33{,}000 \times 1{\cdot}5} = 4\ 86.$$

The work done by the pump while the crane is lifting is

$$\frac{240{,}000 \times 0{\cdot}25}{1{\cdot}5} = 40{,}000 \text{ ft. lbs.}$$

The energy stored in the accumulator must be, therefore, at least 200,000 ft. lbs Therefore, if V_a is its minimum capacity in cubic feet,

$$V_a \times 700 \times 144 = 200{,}000,$$

or $$V_a = 2 \text{ cubic feet nearly.}$$

269. Differential accumulator*.

Tweddell's differential accumulator, shown in Fig. 340, has a fixed ram, the lower part of which is made slightly larger than the upper by forcing a brass liner upon it. A cylinder loaded with heavy cast-iron weights slides upon the ram, water-tight joints being made by means of the cup leathers shown. Water is pumped into the cylinder through a pipe, and a passage drilled axially along the lower part of the ram.

Let p be the pressure in lbs. per sq. inch, d and d_1 the diameters of the upper and lower parts of the ram respectively. The weight lifted (neglecting friction) is then

$$W = p \,.\, \frac{\pi}{4}(d_1^2 - d^2) \text{ lbs.,}$$

and if h is the lift in feet, the energy stored is

$$E = p \,.\, \frac{\pi}{4}(d_1^2 - d^2)\, h \,.\, \text{foot lbs.}$$

The difference of the diameters d_1 and d being small, the pressure p can be very great for a comparatively small weight W.

The capacity of the accumulator is, however, very small. This is of advantage when being used in connection with

* *Proceedings Inst. Mech. Engs.*, 1874.

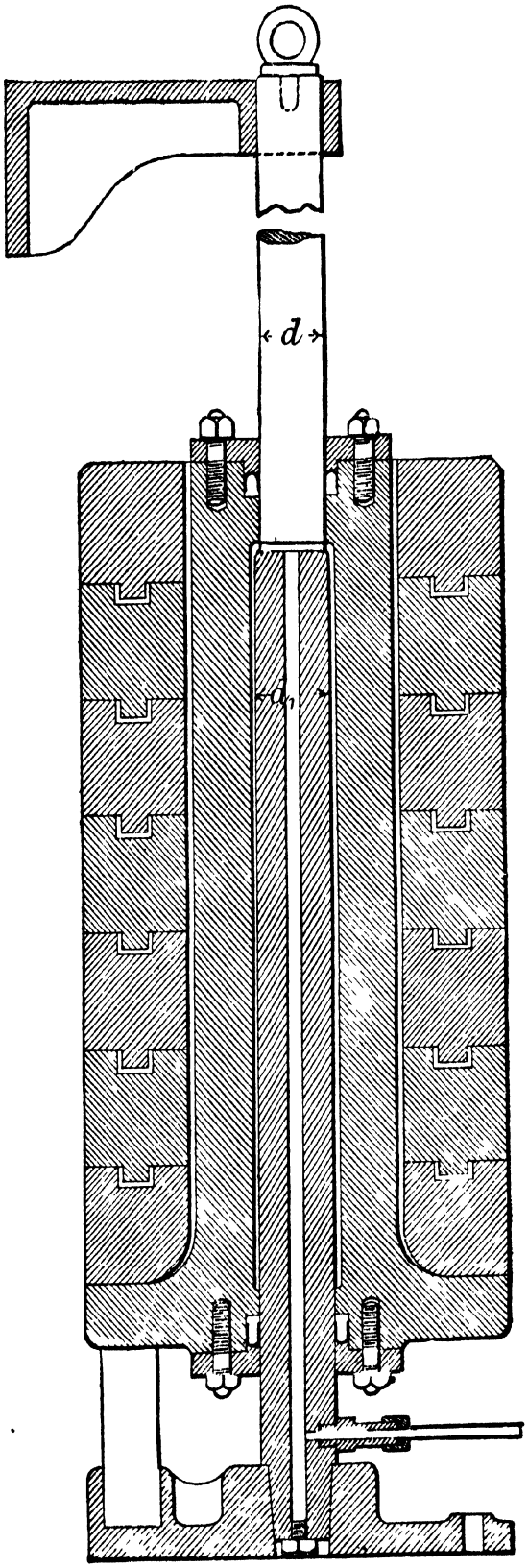

Fig. 340.

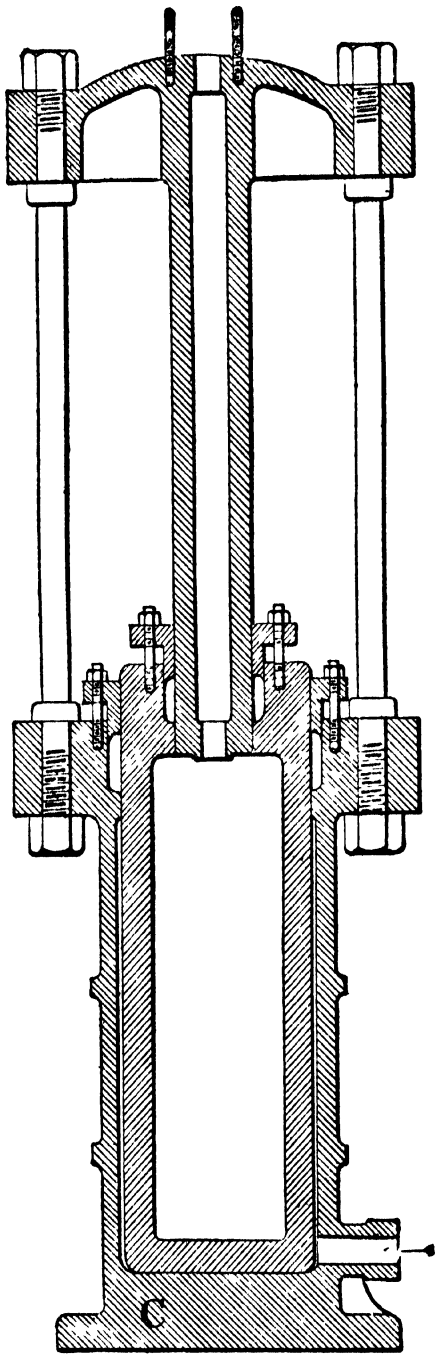

Fig. 341. Hydraulic Intensifier.

hydraulic riveters, as when a demand is made upon the accumulator, the ram falls quickly, but is suddenly arrested when the ram of the riveter comes to rest, and there is a consequent increase in the pressure in the cylinder of the riveter which clinches the rivet. Mr Tweddell estimates that when the accumulator is allowed to fall suddenly through a distance of from 18 to 24 inches, the pressure is increased by 50 per cent.

270. Air accumulator.

The air accumulator is simply a vessel partly filled with air and into which the pumps, which are supplying power to machinery, deliver water while the machinery is not at work.

Such an air vessel has already been considered in connection with reciprocating pumps and an application is shown in connection with a forging press, Fig. 343.

If V is the volume of air in the vessel when the pressure is p pounds per sq. inch and a volume v of water is pumped into the vessel, the volume of air is $(V-v)$.

Assuming the temperature remains constant, the pressure p_1 in the vessel will now be

$$p_1 = \frac{p \,.\, V}{V-v}.$$

If V is the volume of air, and a volume of water v is taken out of the vessel,

$$p_1 = \frac{p \,.\, V}{V+v}.$$

271. Intensifiers.

It is frequently desirable that special machines shall work at a higher pressure than is available from the hydraulic mains. To increase the pressure to the desired amount the intensifier is used.

One form is shown in Fig. 341. A large hollow ram works in a fixed cylinder C, the ram being made water-tight by means of a stuffing-box. Connected to the cylinder by strong bolts is a cross head which has a smaller hollow ram projecting from it, and entering the larger ram, in the upper part of which is made a stuffing-box. Water from the mains is admitted into the large cylinder and also into the hollow ram through the pipe and the lower valve respectively shown in Fig. 342.

If p lbs. per sq. inch is the pressure in the main, then on the underside of the large ram there is a total force acting of $p\frac{\pi}{4}D^2$ pounds, and the pressure inside the hollow ram rises to $p\frac{D^2}{d^2}$ pounds per sq. inch, D and d being the external diameters of the large ram and the small ram respectively.

The form of intensifier here shown is used in connection with a large flanging press. The cylinder of the press and the upper part of the intensifier are filled with water at 700 lbs. per sq. inch and the die brought to the work. Water at the same pressure is admitted below the large ram of the intensifier and the pressure in the upper part of the intensifier, and thus in the press cylinder, rises to 2000 lbs. per sq. inch, at which pressure the flanging is finished.

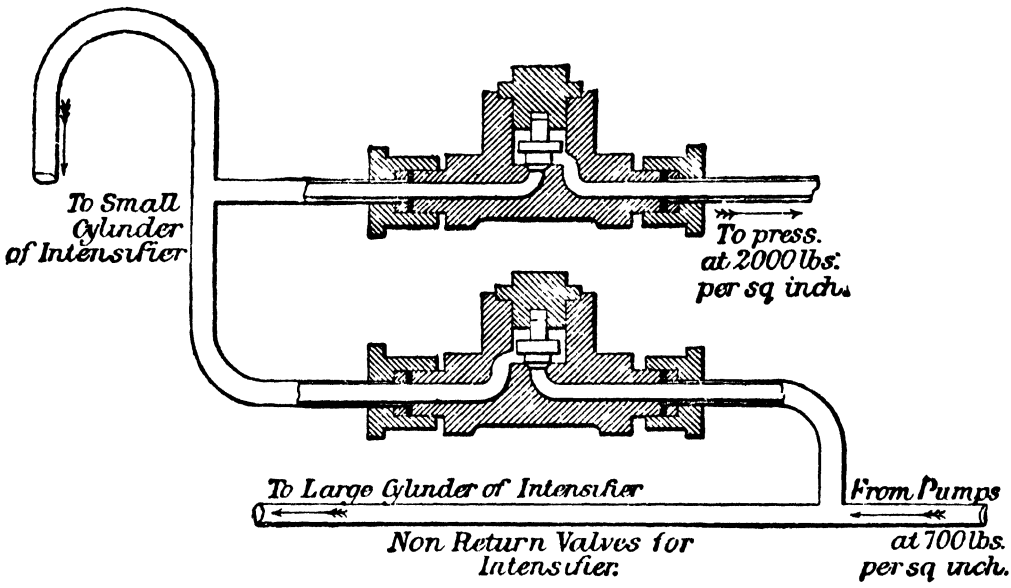

Fig. 342.

272. Steam intensifiers.

The large cylinder of an intensifier may be supplied with steam, instead of water, as in Fig. 343, which shows a steam intensifier used in conjunction with a hydraulic forging press. These intensifiers have also been used on board ship* in connection with hydraulic steering gears.

273. Hydraulic forging press, with steam intensifier and air accumulator.

The application of hydraulic power to forging presses is illustrated in Fig. 343. This press is worked in conjunction with a steam intensifier and air accumulator to allow of rapid working. The whole is controlled by a single lever K, and the press is capable of making 80 working strokes per minute.

When the lever K is in the mid position everything is at rest; on moving the lever partly to the right, steam is admitted into the cylinders D of the press through a valve. On moving the lever to its extreme position, a finger moves the valve M and admits water

* *Proceedings Inst. Mech. Engs.*, 1874.

under a relay piston shown at the top of the figure, which opens a valve E at the top of the air vessel. In small presses the valve E is opened by levers. The ram B now ascends at the rate of

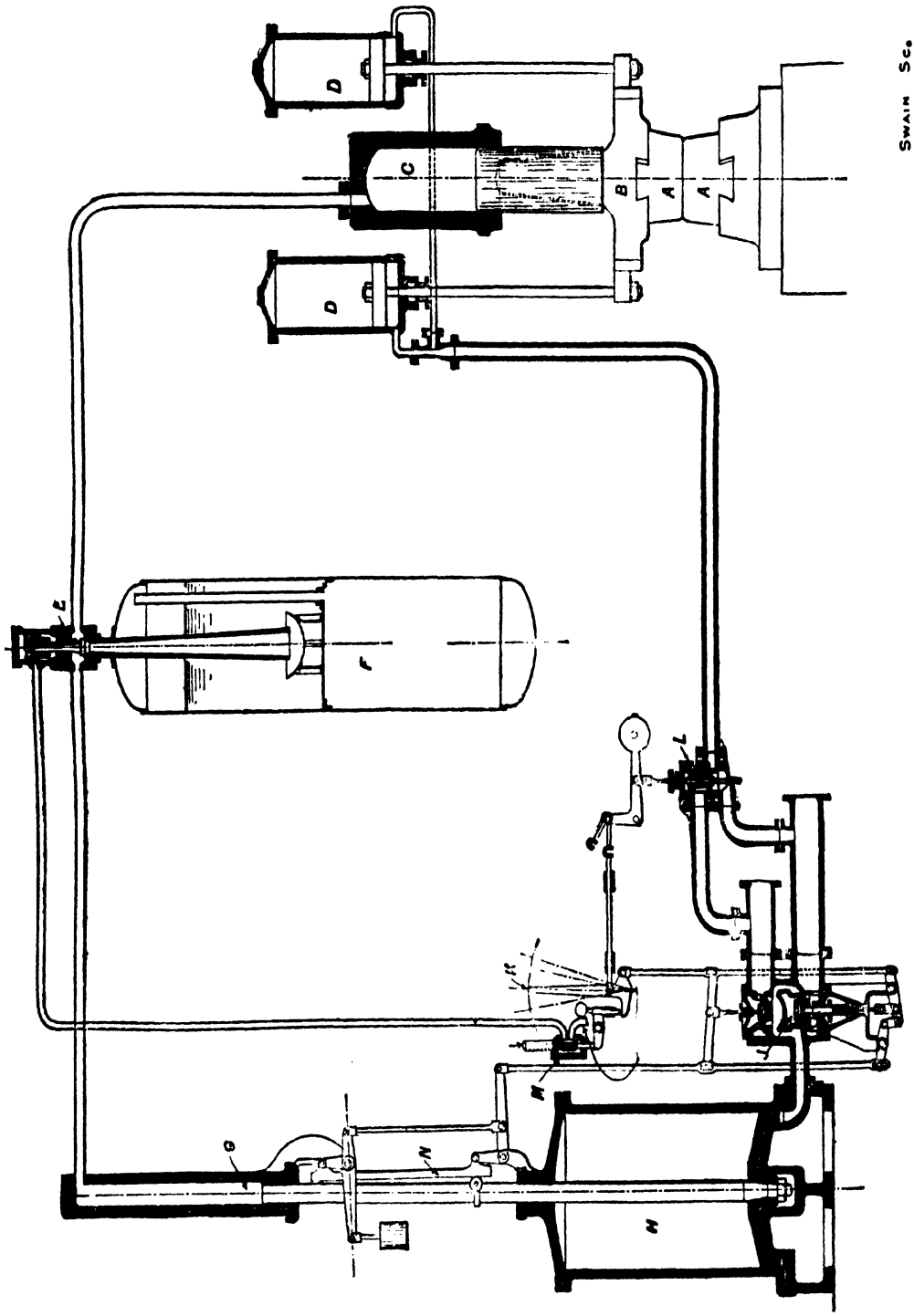

Swain Sc.

Fig. 343. Davy's Hydraulic Forging Press with Steam Intensifier and Air Accumulator.

about 1 foot per second, the water in the cylinder *c* being forced into the accumulator. On moving the lever K to the left, as soon as it has passed the central position the valve L is opened to

exhaust, and water from the air vessel, assisted by gravity, forces down the ram B, the velocity acquired being about 2 feet per second, until the press head A touches the work. The movement of the lever K being continued, a valve situated above the valve J is opened, and steam is admitted to the intensifier cylinder H; the valve E closes automatically, and a large pressure is exerted on the work under the press head.

If only a very short stroke is required, the bye-pass valve L is temporarily disconnected, so that steam is supplied continuously to the lifting cylinders D. The lever K is then simply used to admit and exhaust steam from the intensifier H, and no water enters or leaves the accumulator. An automatic controlling gear is also fitted, which opens the valve J sufficiently early to prevent the intensifier from overrunning its proper stroke.

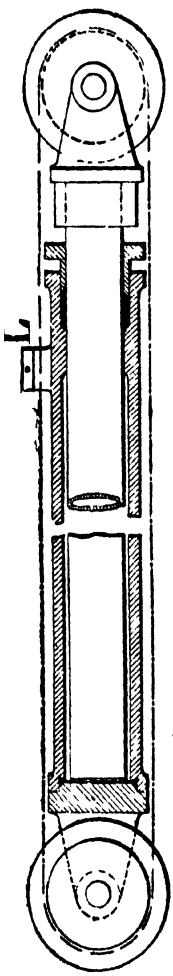

Fig. 344.

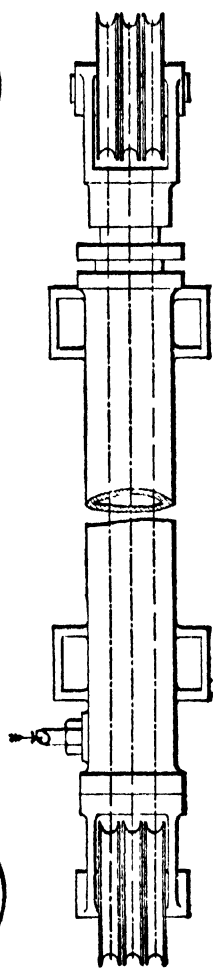

Fig. 345.

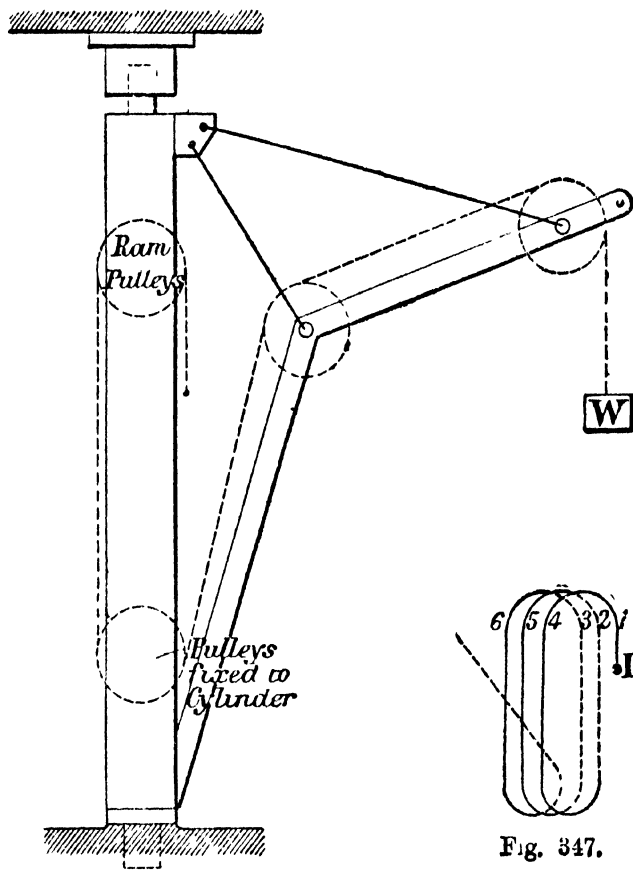

Fig. 346.

Fig. 347.

274. Hydraulic cranes.

Fig. 344 shows a section through, and Fig. 345 an elevation of, a hydraulic crane cylinder.

One end of a wire rope, or chain, is fixed to a lug L on the cylinder, and the rope is then passed alternately round the upper and lower pulleys, and finally over the pulley on the jib of the crane, Fig. 346. In the crane shown there are three pulleys on the ram, and neglecting friction, the pressure on the ram is equally divided among the six ropes. The weight lifted is therefore one-sixth of the pressure on the ram, but the weight is lifted a distance equal to six times the movement of the ram.

Let p_0 and p be the pressures per sq. inch in the crane valve chest and in the cylinder respectively, d the diameter and A the area of the ram in inch units, a the area of the valve port, and v and v_1 the velocities in ft. per sec. of the ram and the water through the port respectively. Then

$$p_0 - p = \frac{w}{144}\frac{(v_1 - v)^2}{2g} = \frac{\cdot 433 v^2 A^2}{2ga^2} \text{ nearly} \quad \ldots\ldots\ldots\ldots (1).$$

The energy supplied to the crane per cubic foot displacement of the ram is $144p_0$ ft. lbs., and the work done on the ram is $144p$ ft. lbs. For a given lift, the number of cubic feet of water used is the same whatever the load lifted, and at light loads the hydraulic efficiency p/p_0 is consequently small. If there are $n/2$ pulleys on the end of the ram, arranged as in Fig. 347, and e is the mechanical efficiency of the ram packing and e_1 of the pulley system, the actual weight lifted is

$$W = ee_1 \frac{\pi p d^2}{4n} \quad \ldots\ldots\ldots\ldots\ldots\ldots\ldots\ldots (2).$$

When the ram is in good condition the efficiency of cup leather packings is from ·6 to ·78, of plaited hemp or asbestos from ·7 to ·85, of cotton from ·8 to ·96, and the efficiency of each pulley is from ·95 to ·98. When the lift is direct acting n in (2) is replaced by unity. To determine the diameter of the ram to lift a given load, at a given velocity, with a given service pressure p_0, the ratio of the ram area to port area must be known so that p can be found from (1). If W_1 is the load on the ram when the crane is running light, the corresponding pressure p_1 in the cylinder can be found from (2), and by substituting in (1), the corresponding velocity v_2 of lifting can be obtained. If the valve is to be fully open at all loads, the ratio of the ram area to the port area should be fixed so that the velocity v_2 does not become excessive. The ratio of v_2 to v is generally made from 1·5 to 3.

275. Double power cranes.

To enable a crane designed for heavy work to lift light loads with reasonable efficiency, two lifting rams of different diameters are employed, the smaller of which can be used at light loads.

A convenient arrangement is as shown in Figs. 348 and 349, the smaller ram R′ working inside the large ram R.

When light loads are to be lifted, the large ram is prevented from moving by strong catches C, and the volume of water used is only equal to the diameter of the small ram into the length of the stroke. For large loads, the catches are released and the two rams move together.

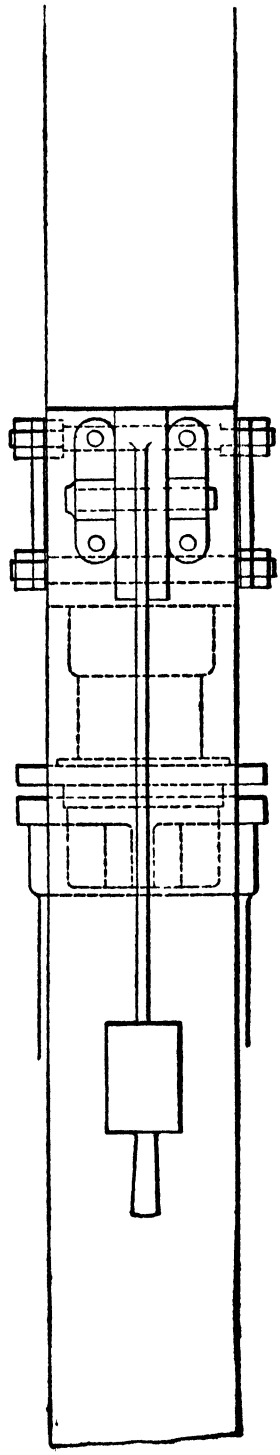

Fig. 348.

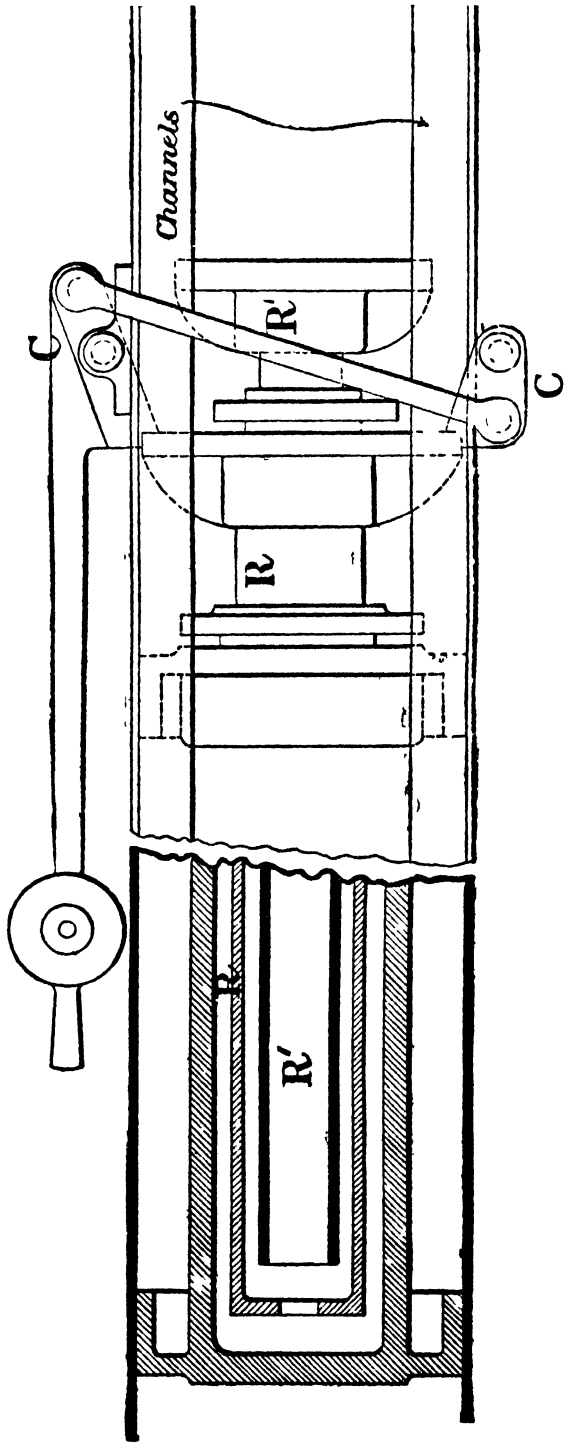

Fig. 349. Double-power Hydraulic Crane Cylinder.

Another arrangement is shown in Fig. 350, water being admitted to both faces of the piston when light loads are to be lifted, and to the face A only when heavy loads are to be raised.

For a given stroke s of the ram, the ratio of the energy supplied in the first case to that in the second is $(D^2 - d^2)/D^2$.

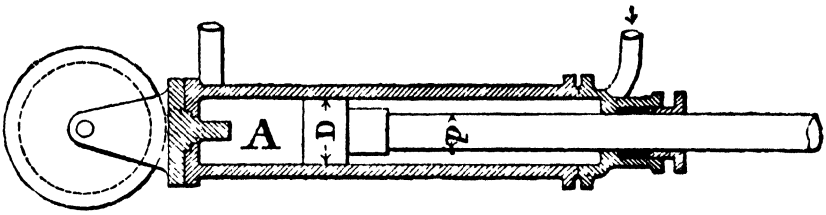

Fig. 350. Armstrong Double-power Hydraulic Crane Cylinder.

276. Hydraulic crane valves.

Figs. 351 and 352 show two forms of lifting and lowering valves used by Armstrong, Whitworth and Co. for hydraulic cranes.

In the arrangement shown in Fig. 351 there are two independent valves, the one on the left being the pressure, and that on the right the exhaust valve.

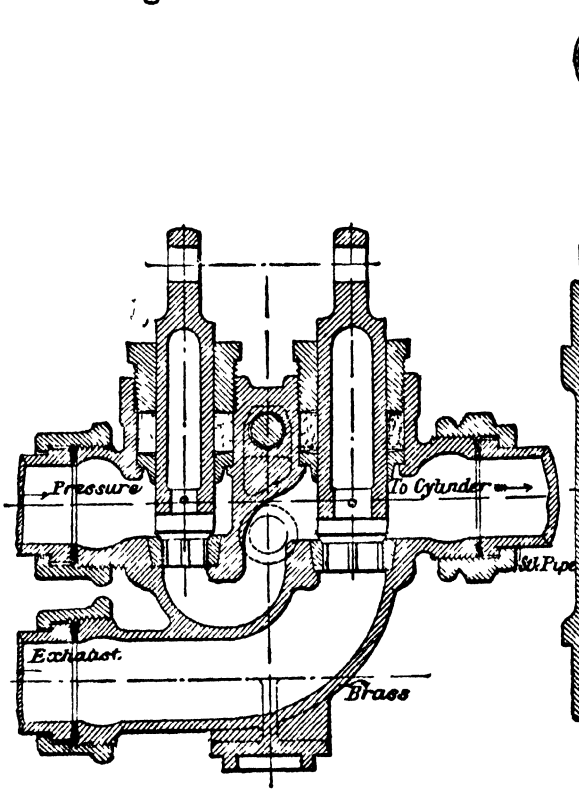

Fig. 351. Armstrong-Whitworth Hydraulic Crane Valve.

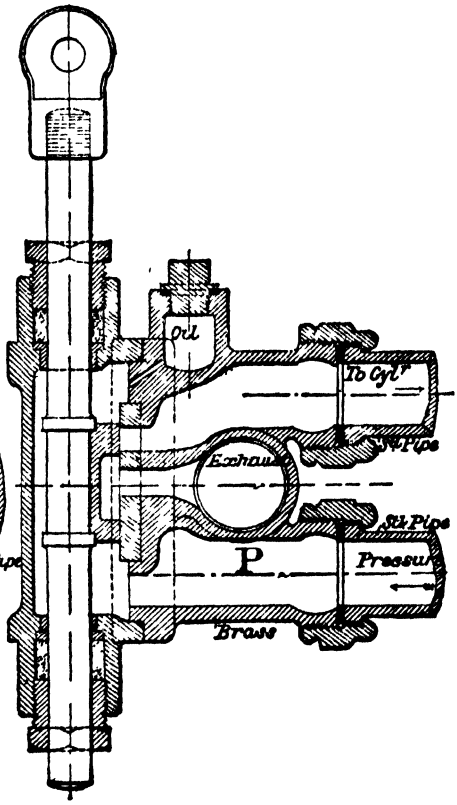

Fig. 352. Armstrong-Whitworth Hydraulic Crane Slide Valve.

In the arrangement shown in Fig. 352 a single D slide valve is used. Water enters the valve chest through the pressure passage P. The valve is shown in the neutral position. If the valve is lowered, the water enters the cylinder, but if it is raised, water escapes from the cylinder through the port of the slide valve.

277. Small hydraulic press. Fig. 353 is a section through the cylinder of a small hydraulic press, used for testing springs.

The cast-iron cylinder is fitted with a brass liner, and axially with the cylinder a rod P_r, having a piston P at the free end, is screwed into the liner. The steel ram is hollow, the inner cylinder being lined with a brass liner.

Water is admitted and exhausted from the large cylinder through a Luthe valve, fixed to the top of the cylinder and operated by the lever A. The small cylinder inside the ram is connected directly to the pressure pipe by a hole drilled along the rod P_r, so that the full pressure of the water is continuously exerted upon the small piston P and the annular ring RR.

Leakage to the main cylinder is prevented by means of a gutta-percha ring G and a ring leather c, and leakage past the steel ram and piston P by cup leathers L and L_1.

When the valve spindle is moved to the right, the port p is connected with the exhaust, and the ram is forced up by the pressure of the water on the annular ring RR. On moving the valve spindle over to the left, pressure water is admitted into the cylinder and the ram is forced down. Immediately the pressure is released, the ram comes back again.

Let D be the diameter of the ram, d the diameter of the rod P_r, d_1 the diameter of the piston P, and p the water pressure in pounds per sq. inch in the cylinder.

The resultant force acting on the ram is

$$P = p\frac{\pi}{4}\{D^2 - d^2 - (d_1^2 - d^2)\} = p\frac{\pi}{4}(D^2 - d_1^2) \text{ lbs.},$$

and the force lifting the ram when pressure is released from the main cylinder is,

$$F = p\frac{\pi}{4}(d_1^2 - d^2) \text{ lbs.}$$

The cylindrical valve spindle S has a chamber C cast in it, and two rings of six holes in each ring are drilled through the external shell of the chamber. These rings of holes are at such a distance apart that, when the spindle is moved to the right, one ring is opposite to the exhaust and the other opposite to the port p, and when the spindle is moved to the left, the holes

are respectively opposite to the port p and the pressure water inlet.

Leakage past the spindle is prevented by the four ring leathers shown.

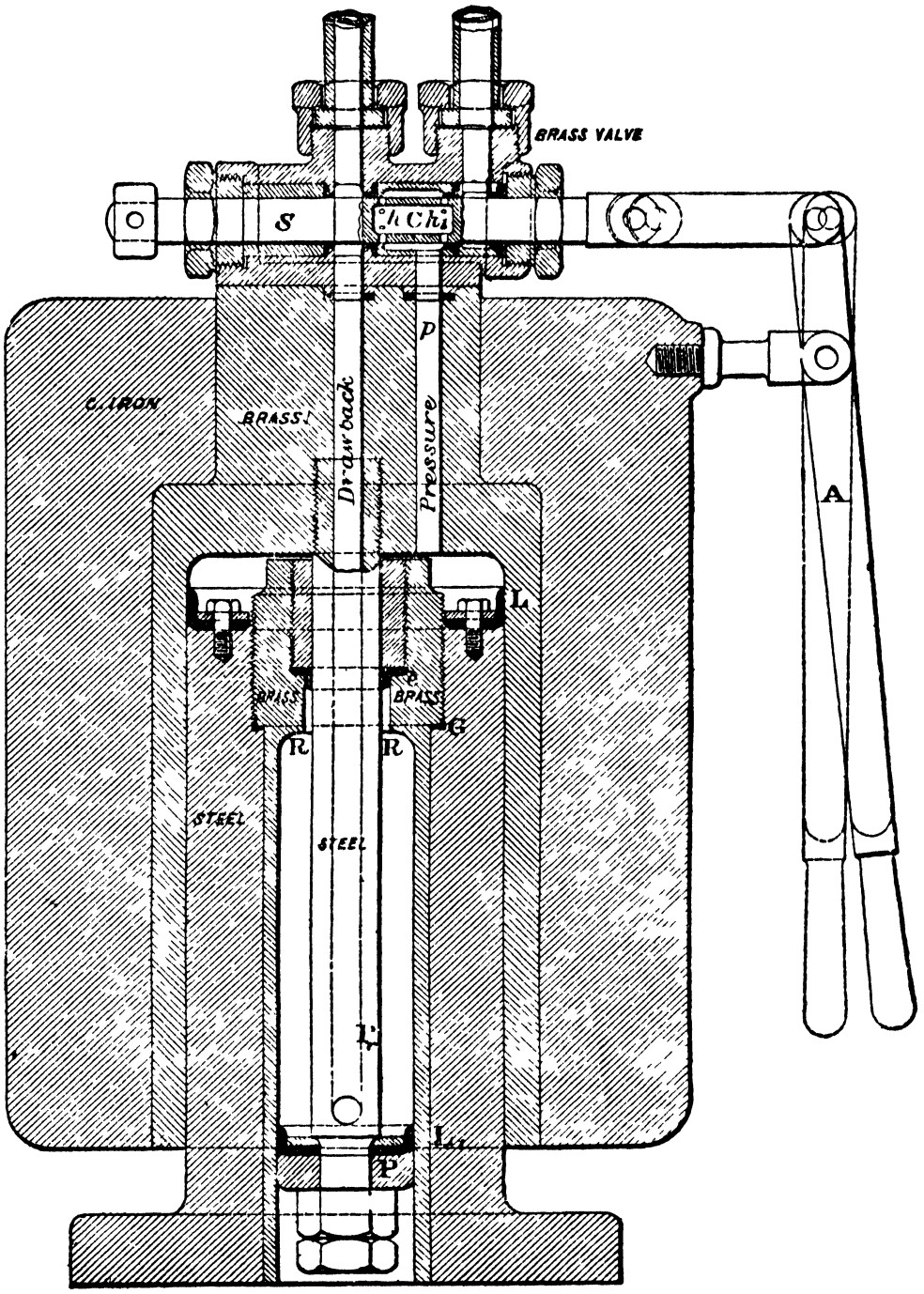

Fig. 353. Hydraulic Press with Luthe Valve.

278. Hydraulic riveter.

A section through the cylinder and ram of a hydraulic riveter is shown in Fig. 354.

re respectively opposite to the port p and the pressure water let.

Leakage past the spindle is prevented by the four ring leathers own.

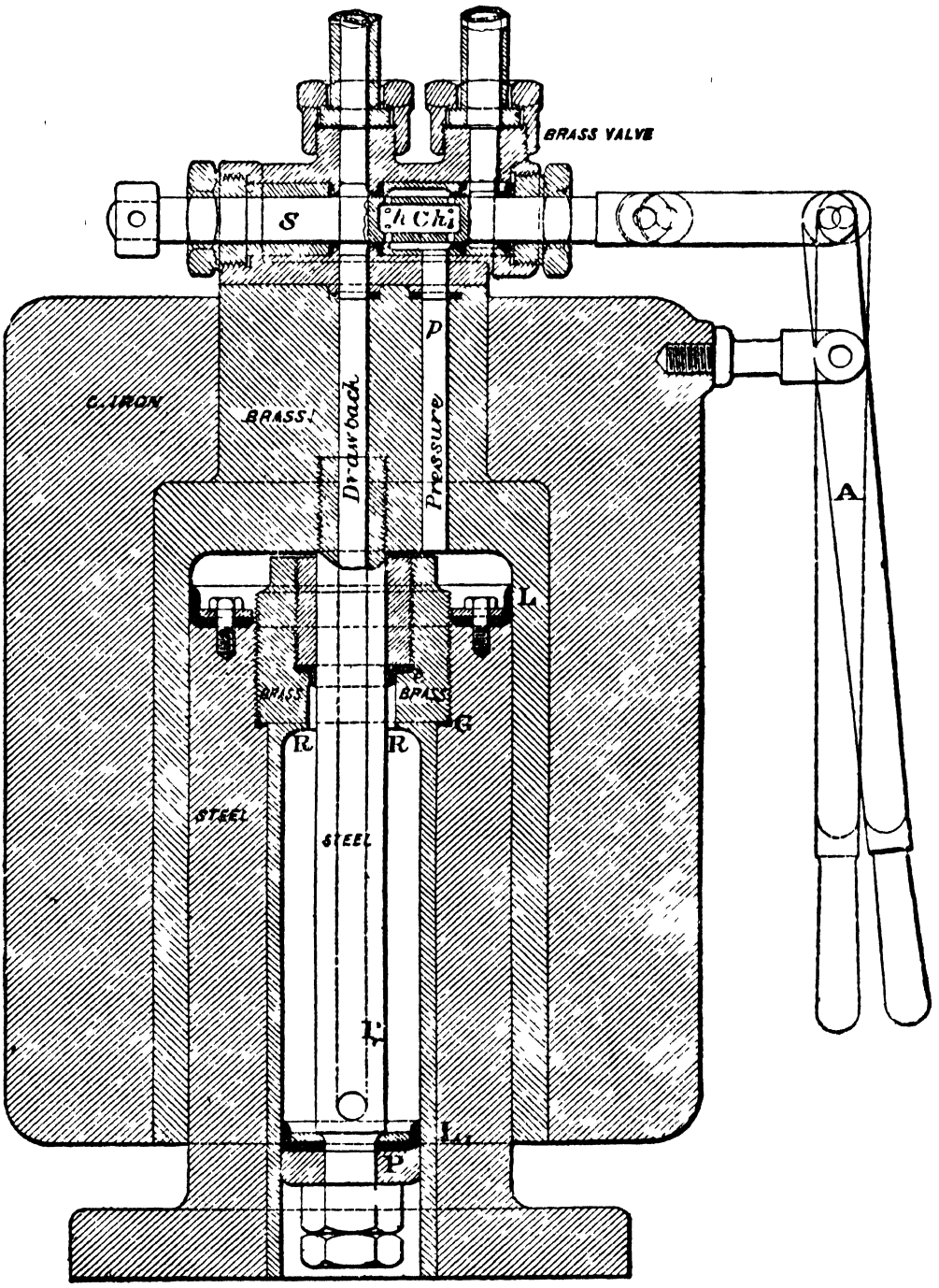

Fig. 353. Hydraulic Press with Luthe Valve.

278. Hydraulic riveter.

A section through the cylinder and ram of a hydraulic riveter shown in Fig. 354.

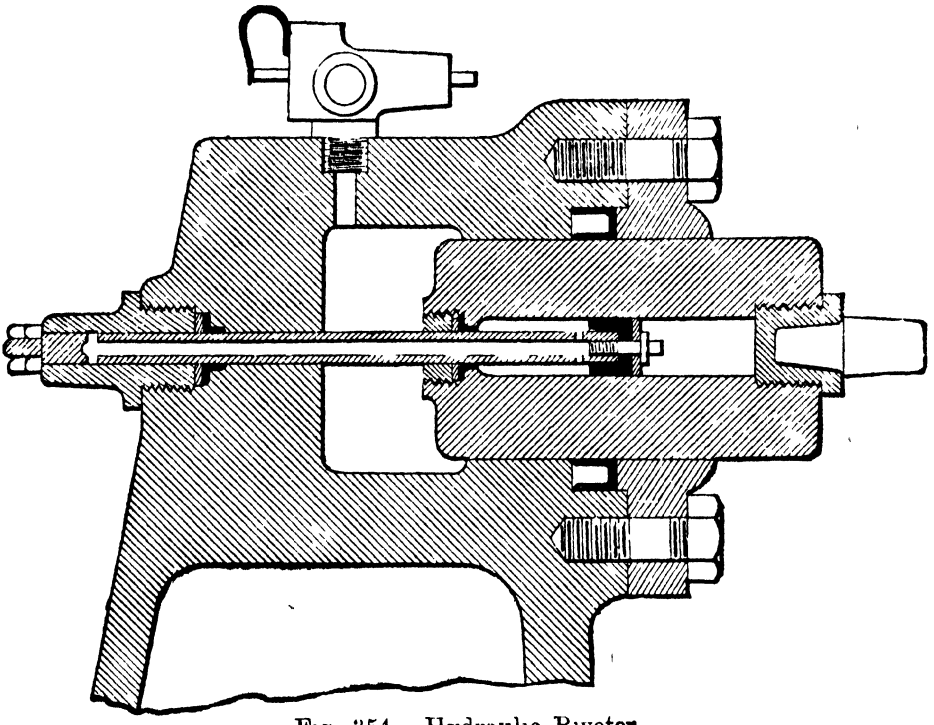

Fig. 354. Hydraulic Riveter.

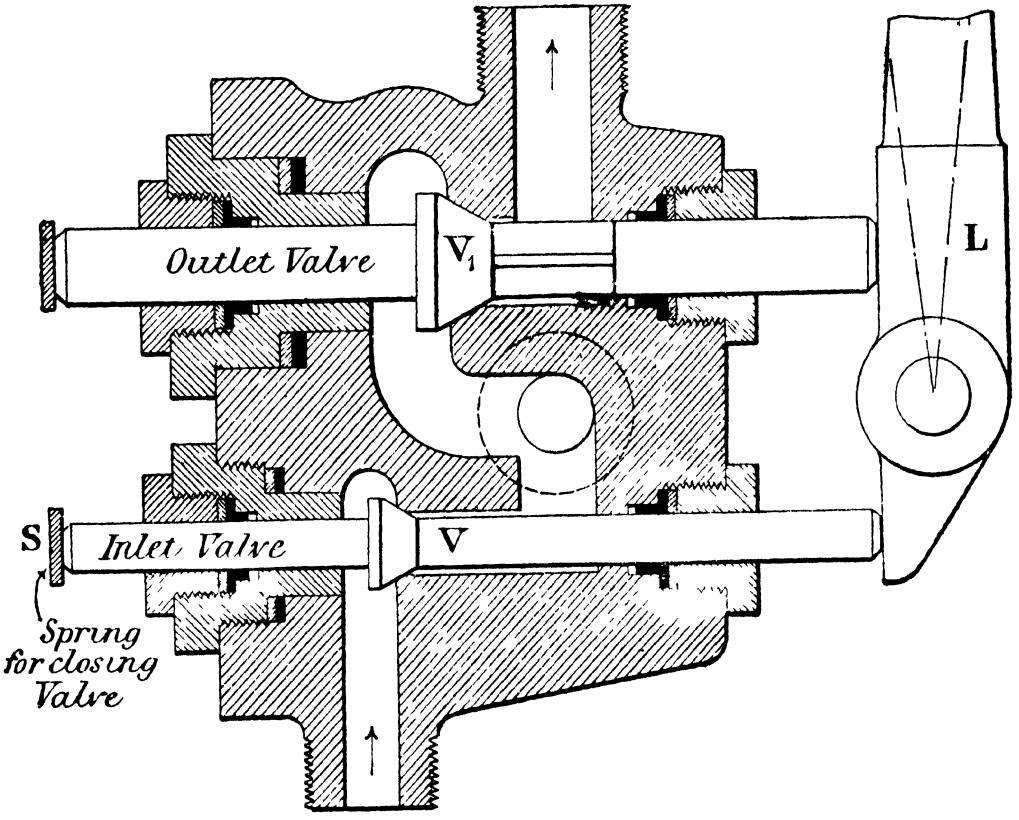

Fig. 355. Valves for Hydraulic Riveter.

The mode of working is exactly the same as that of the small press described in section 277.

An enlarged section of the valves is shown in Fig. 355. On pulling the lever L to the right, the inlet valve V is opened, and pressure water is admitted to the large cylinder, forcing out the ram. When the lever is in mid position, both valves are closed by the springs S, and on moving the lever to the left, the exhaust valve V_1 is opened, allowing the water to escape from the cylinder. The pressure acting on the annular ring inside the large ram then brings back the ram. The methods of preventing leakage are clearly shown in the figures.

279. Hydraulic engines.

Hydraulic power is admirably adapted for machines having a reciprocating motion only, especially in those cases where the load is practically constant.

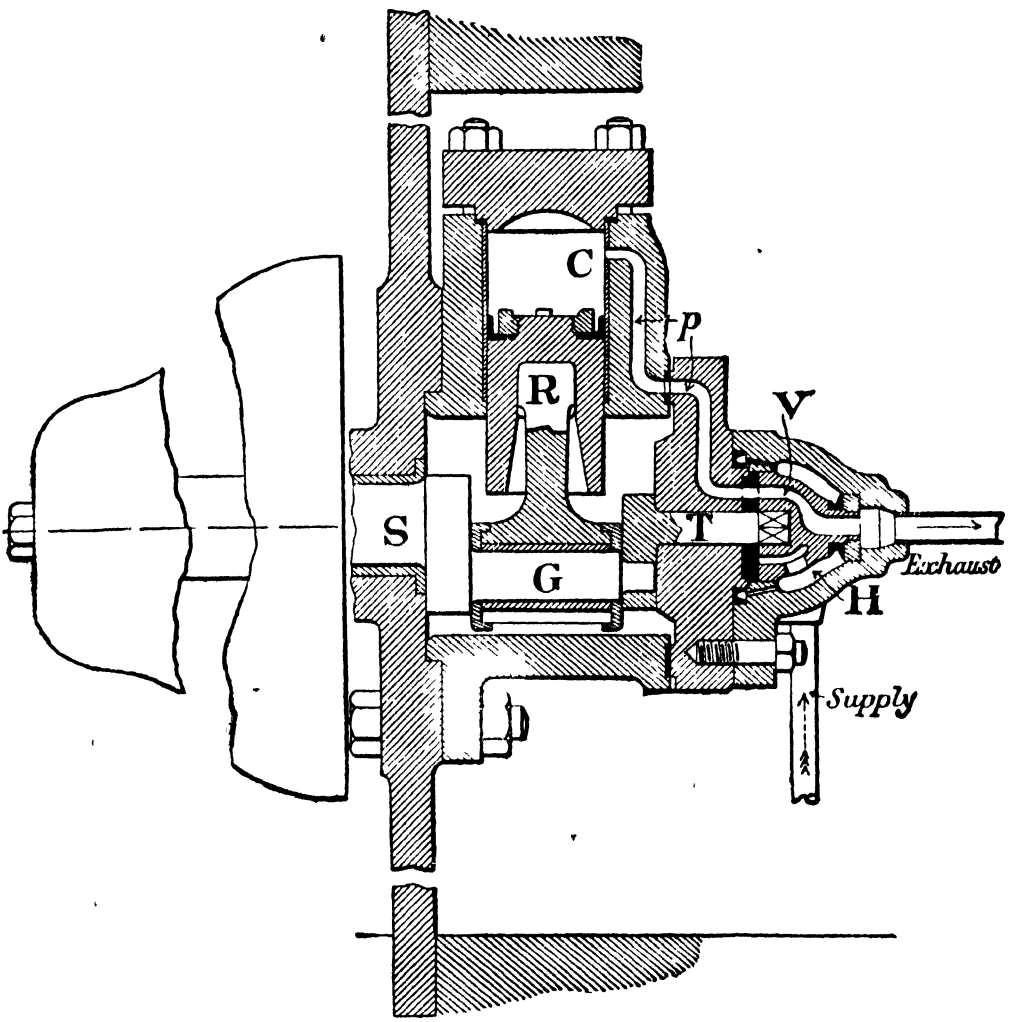

Fig. 356. Hydraulic Capstan.

It has moreover been successfully applied to the driving of machines such as capstans and winches in which a reciprocating motion is converted into a rotary motion.

The hydraulic-engine shown in Figs. 356 and 357, has three cylinders in one casting, the axes of which meet on the axis of the crank shaft S. The motion of the piston P is transmitted to the crank pin by short connecting rods R. Water is admitted and exhausted through a valve V, and ports *p*.

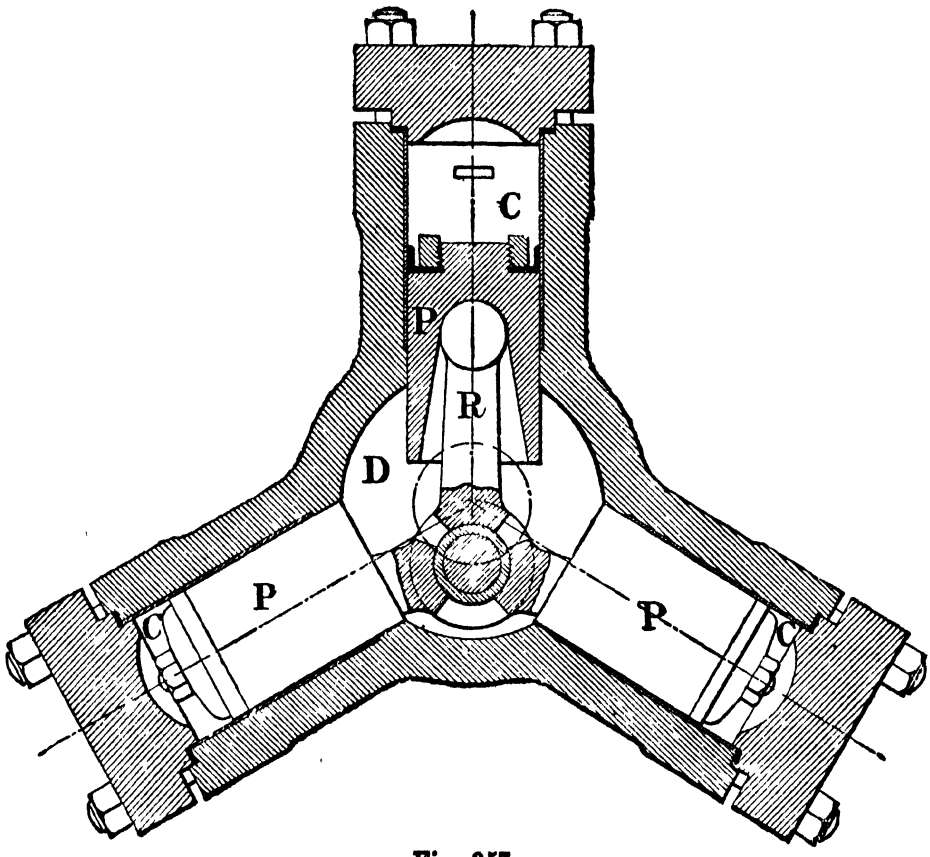

Fig. 357.

The face of the valve is as shown in Fig. 358, E being the exhaust port connected through the centre of the valve to the exhaust pipe, and KM the pressure port, connected to the supply chamber H by a small port through the side of the valve. The valve seating is generally made of lignum-vitae, and has three circular ports as shown dotted in Fig. 358. The valve receives its motion from a small auxiliary crank T, revolved by a projection from the crank pin G. When the piston 1 is at the end of its stroke, Fig. 359, the port p_1 should be just opening to the pressure port, and just closing to the exhaust port E. The port p_3 should be fully open to pressure and port p_2 fully open to exhaust. When the crank has turned through 60 degrees, piston 3 will

be at the inner end of its stroke, and the edge M of the pressure port should be just closing to the port p_3. At the same instant the edge N of the exhaust port should be coincident with the lower edge of the port p_3. The angles QOM, and LON, therefore, should each be 60 degrees. A little lead may be given to the valve ports, *i.e.* they may be made a little longer than shown in the Fig. 358, so as to ensure full pressure on the piston when commencing its stroke. There is no dead centre, as in whatever position the crank stops one or more of the pistons can exert a turning moment on the shaft, and the engine will, therefore, start in any position.

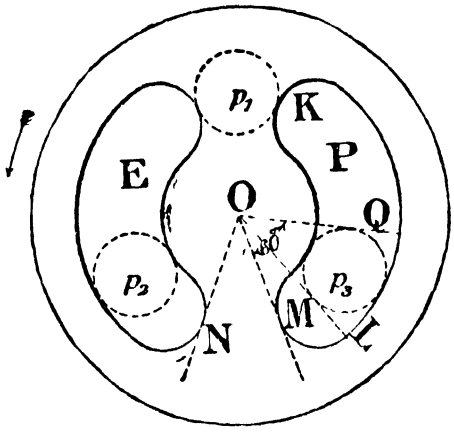

Fig. 358.

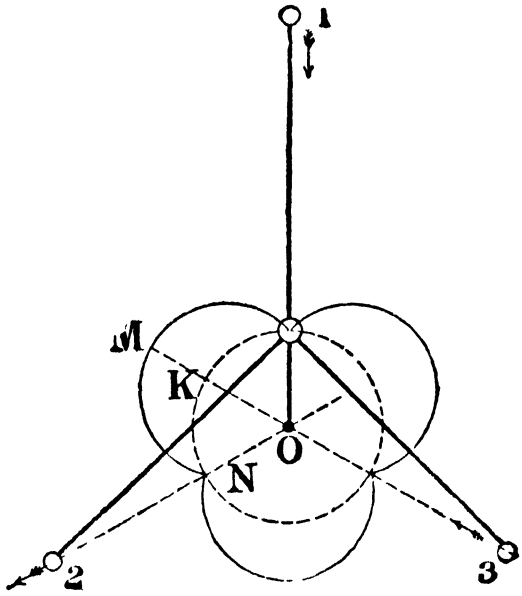

Fig. 359.

The crank* effort, or turning moment diagram, is shown in Fig. 359, the turning moment for any crank position OK being OM. The turning moment can never be less than ON, which is the magnitude of the moment when any one of the pistons is at the end of its stroke.

This type of hydraulic engine has been largely used for the driving of hauling capstans, and other machinery which works intermittently. It has the disadvantage, already pointed out in connection with hydraulic lifts and cranes, that the amount of water supplied is independent of the effective work done by the machine, and at light loads it is consequently very inefficient. There have been many attempts to overcome this difficulty, notably as in the Hastie engine†, and Rigg engine.

* See text book on Steam Engine.
† *Proceedings Inst. Mech. Engs.*, 1874.

280. Rigg hydraulic engine.

To adapt the quantity of water used to the work done, Rigg* has modified the three cylinder engine by fixing the crank pin, and allowing the cylinders to revolve about it as centre.

The three pistons P_1, P_2 and P_3 are connected to a disc, Fig. 360, by three pins. This disc revolves about a fixed centre A. The three cylinders rotate about a centre G, which is capable of being moved nearer or further away from the point A as desired. The stroke of the pistons is twice AG, whether the crank or the cylinders revolve, and since the cylinders, for each stroke, have to be filled with high pressure water, the quantity of water supplied per revolution is clearly proportional to the length AG.

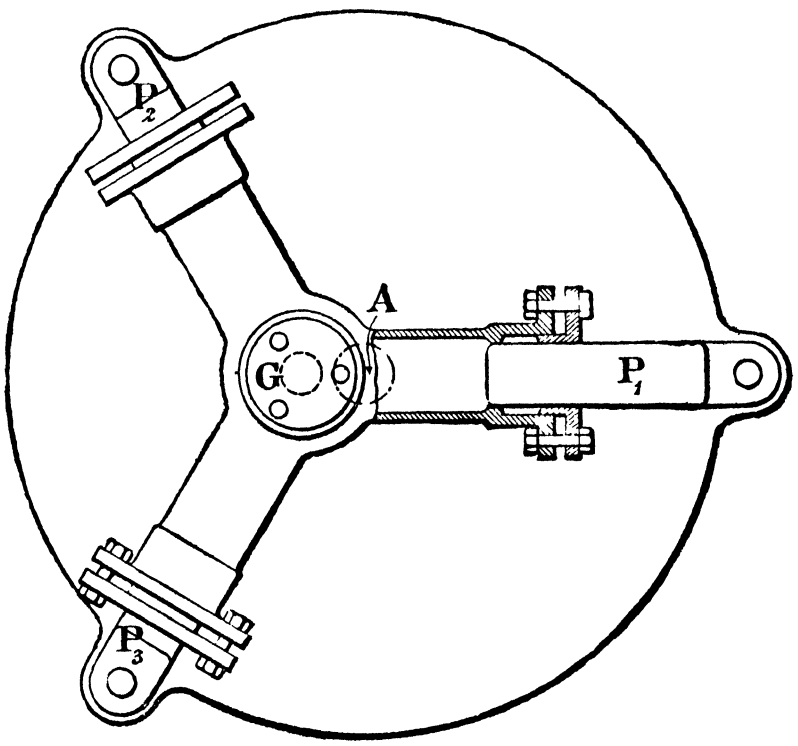

Fig. 360. Rigg Hydraulic Engine.

The alteration of the length of the stroke is effected by means of the subsidiary hydraulic engine, shown in Fig. 361. There are two cylinders C and C_1, in which slide a hollow double ended ram PP_1 which carries the pin G, Fig. 360. Cast in one piece with the ram is a valve box B. R is a fixed ram, and through it water enters the cylinder C_1, in which the pressure is continuously maintained. The difference between the effective areas of P and P_1 when water is in the two cylinders, is clearly equal to the area of the ram head R_1.

* See also *Engineer*, Vol. LXXXV, 1898.

From the cylinder C_1 the water is led along the passages shown to the valve V. On opening this valve high-pressure water is admitted to the cylinder C. A second valve similar to V, but not shown, is used to regulate the exhaust from the cylinder C. When this valve is opened, the ram PP_1 moves to the left and carries with it the pin G, Fig. 360. On the exhaust being closed and the valve V opened, the full pressure acts upon both ends of the ram, and since the effective area of P is greater than P_1 it is moved to the right carrying the pin G. If both valves are closed, water cannot escape from the cylinder C and the ram is locked in position by the pressure on the two ends.

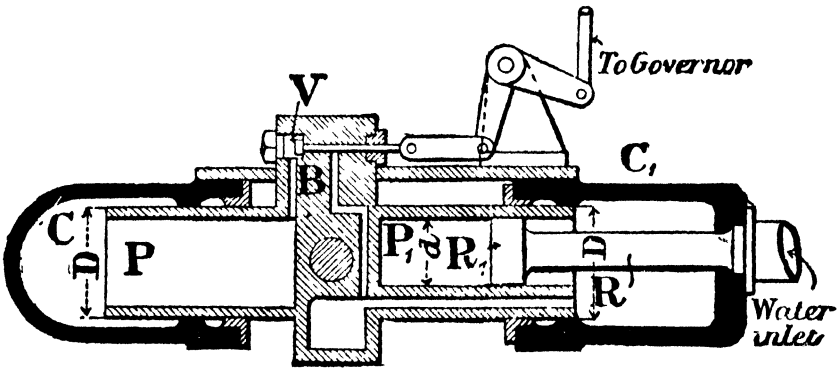

Fig. 361.

EXAMPLES.

(1) The ram of a hydraulic crane is 7 inches diameter. Water is supplied to the crane at 700 lbs. per square inch. By suitable gearing the load is lifted 6 times as quickly as the ram. Assuming the total efficiency of the crane is 70 per cent., find the weight lifted.

(2) An accumulator has a stroke of 23 feet; the diameter of the ram is 23 inches; the working pressure is 700 lbs. per square inch. Find the capacity of the accumulator in horse-power hours.

(3) The total weight on the cage of an ammunition hoist is 3250 lbs. The velocity ratio between the cage and the ram is six, and the extra load on the cage due to friction may be taken as 30 per cent. of the load on the cage. The steady speed of the ram is 6 inches per second and the available pressure at the working valve is 700 lbs. per square inch.

Estimate the loss of head at the entrance to the ram cylinder, and assuming this was to be due to a sudden enlargement in passing through the port to the cylinder, estimate, on the usual assumption, the area of the port, the ram cylinder being $9\frac{3}{8}$ inches diameter. Lond. Un. 1906.

The effective pressure $p = \dfrac{3250 \times 1{\cdot}3 \times 6}{\frac{\pi}{4} d^2}$.

Loss of head $$=\frac{(700-p).144}{w}=\frac{(v-\cdot 5)^2}{2g}.$$

v = velocity through the valve.

Area of port $$=\frac{\frac{\pi}{4}.d^2\times\cdot 5}{v}.$$

(4) Describe, with sketches, some form of hydraulic accumulator suitable for use in connection with riveting. Explain by the aid of diagrams, if possible, the general nature of the curve of pressure on the riveter ram during the stroke; and point out the reasons of the variations. Lond. Un. 1905. (See sections 262 and 269.)

(5) Describe with sketches a hydraulic intensifier.

An intensifier is required to increase the pressure of 700 lbs. per square inch on the mains to 3000 lbs. per square inch. The stroke of the intensifier is to be 4 feet and its capacity three gallons. Determine the diameters of the rams. Inst. C. E. 1905.

(6) Sketch in good proportion a section through a differential hydraulic accumulator. What load would be necessary to produce a pressure of 1 ton per square inch, if the diameters of the two rams are 4 inches and 4½ inches respectively? Neglect the friction of the packing. Give an instance of the use of such a machine and state why accumulators are used.

(7) A Tweddell's differential accumulator is supplying water to riveting machines. The diameters of the two rams are 4 inches and 4½ inches respectively, and the pressure in the accumulator is 1 ton per square inch. Suppose when the valve is closed the accumulator is falling at a velocity of 5 feet per second, and the time taken to bring it to rest is 2 seconds, find the increase in pressure in the pipe.

(8) A lift weighing 12 tons is worked by water pressure, the pressure in the main at the accumulator being 1200 lbs. per square inch; the length of the supply pipe which is 8½ inches in diameter is 900 yards. What is the approximate speed of ascent of this lift, on the assumption that the friction of the stuffing-box, guides, etc. is equal to 6 per cent. of the gross load lifted and the ram is 8 inches diameter?

(9) Explain what is meant by the "coefficient of hydraulic resistance" as applied to a whole system, and what assumption is usually made regarding it? A direct acting lift having a ram 10 inches diameter is supplied from an accumulator working under a pressure of 750 lbs. per square inch. When carrying no load the ram moves through a distance of 60 feet, at a uniform speed, in one minute, the valves being fully open. Estimate the coefficient of hydraulic resistance referred to the velocity of the ram, and also how long it would take to move the same distance when the ram carries a load of 20 tons. Lond. Un. 1905.

$\left(\frac{C_r}{64}=\text{head lost}=\frac{750\times 144}{62\cdot 4}.\right.$ Assumption is made that resistance varies as v^2.$\left.\right)$

CHAPTER XIII.

RESISTANCE TO THE MOTION OF BODIES IN WATER.

281. Froude's* experiments to determine frictional resistances of thin boards when propelled in water.

It has been shown that the frictional resistance to the flow of water along pipes is proportional to the velocity raised to some power n, which approximates to two, and Mr Froude's classical experiments, in connection with the resistance of ships, show that the resistance to motion of plane vertical boards when propelled in water, follows a similar law.

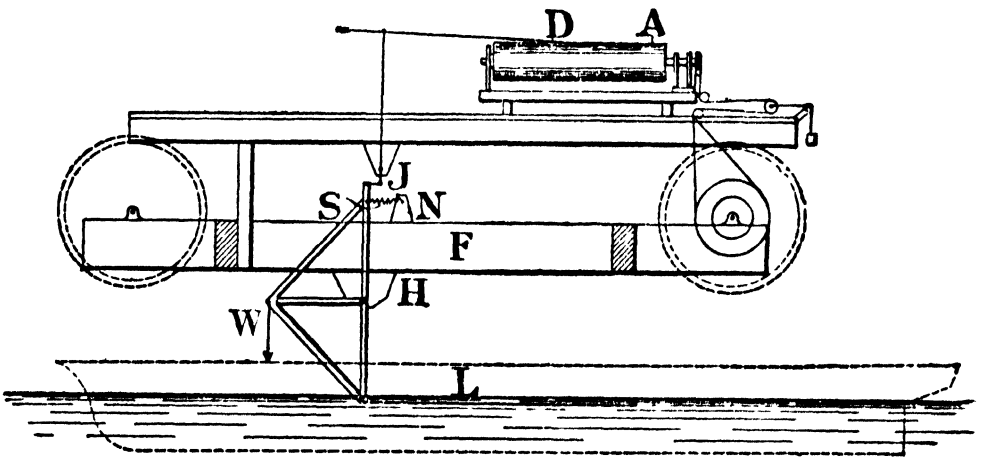

Fig. 362.

The experiments were carried out near Torquay in a parallel sided tank 278 feet long, 36 feet broad and 10 feet deep. A light railway on "which ran a stout framed truck, suspended from the axles of two pairs of wheels," traversed the whole length of the tank, about 20 inches above the water level. The truck was propelled by an endless wire rope wound on to a barrel, which could be made to revolve at varying speeds, so that the truck could traverse the length of the tank at any desired velocity between 100 and 1000 feet per minute.

* *Brit. Ass. Reports*, 1872–4.

Planes of wood, about $\frac{3}{16}$ inch thick, the surfaces of which were covered with various materials as set out in Table XXXIX, were made of a uniform depth of 19 inches, and when under experiment were placed on edge in the water, the upper edge being about $1\frac{1}{2}$ inches below the surface. The lengths were varied from 2 to 50 feet.

The apparatus as used by Froude is illustrated and described in the *British Association Reports* for 1872.

A later adaptation of the apparatus as used at Haslar for determining the resistance of ships' models is shown in Fig. 362. An arm L is connected to the model and to a frame beam, which is carried on a double knife edge at H. A spring S is attached to a knife edge on the beam and to a fixed knife edge N on the frame of the truck. A link J connects the upper end of the beam to a multiplying lever which moves a pen D over a recording cylinder. This cylinder is made to revolve by means of a worm and wheel, the worm being driven by an endless belt from the axle of the truck. The extension of the spring S and thus the movement of the pen D is proportional to the resistance of the model, and the rotation of the drum is proportional to the distance moved. A pen A actuated by clockwork registers time on the cylinder. The time taken by the truck to move through a given distance can thus be determined.

To calibrate the spring S, weights W are hung from a knife edge, which is exactly at the same distance from H as the points of attachment of L and the spring S.

From the results of these experiments, Mr Froude made the following deductions.

(1) The frictional resistance varies very nearly with the square of the velocity.

(2) The mean resistance per square foot of surface for lengths up to 50 feet diminishes as the length is increased, but is practically constant for lengths greater than 50 feet.

(3) The frictional resistance varies very considerably with the roughness of the surface.

Expressed algebraically the frictional resistance to the motion of a plane surface of area A when moving with a velocity v feet per second is

$$r_f = \frac{f_0 \cdot \mathrm{A} v^n}{10^n}$$

$$= f \cdot \mathrm{A} \cdot v^n,$$

f being equal to $\frac{f_0}{10^n}$.

TABLE XXXIX.

Showing the result of Mr Froude's experiments on the frictional resistance to the motion of thin vertical boards towed through water in a direction parallel to its plane.

Width of boards 19 inches, thickness $\frac{3}{16}$ inch.

n = power or index of speed to which resistance is approximately proportional.

f_0 = the mean resistance in pounds per square foot of a surface, the length of which is that specified in the heading, when the velocity is 10 feet per second.

f_1 = the resistance per square foot, at a distance from the leading edge of the board, equal to that specified in the heading, at a velocity of 10 feet per second.

As an example, the resistance of the tinfoil surface per square foot at 8 feet from the leading edge of the board, at 10 feet per second, is estimated at 0·263 pound per square foot; the mean resistance is 0·278 pound per square foot.

Surface covered with	Length of planes											
	2 feet			8 feet			20 feet			50 feet		
	n	f_0	f_1	n	f_0	f_1	n	f_0	f_1	n	f_0	f_1
Varnish	2·0	0 41	0 390	1·85	0·325	0 264	1·85	0·278	0·240	1·83	0·250	0·226
Tinfoil	2·16	0 30	0 295	1·99	0·278	0·263	1·90	0·262	0 244	1·83	0·246	0·232
Calico	1·93	0 87	0·725	1·92	0 626	0·504	1·89	0·531	0·447	1·87	0·474	0·423
Fine sand	2·0	0 81	0·690	2 0	0 583	0·450	2·0	0·480	0·384	2·06	0·405	0·337
Medium sand	2·0	0 90	0 730	2 0	0·625	0·488	2·0	0·534	0·465	2·00	0·488	0·456
Coarse sand	2·0	1·10	0·880	2·0	0·714	0·520	2·0	0·588	0·490			

The diminution of the resistance per unit area, with the length, is principally due to the relative velocity of the water and the board not being constant throughout the whole length.

As the board moves through the water the frictional resistance of the first foot length, say, of the board, imparts momentum to the water in contact with it, and the water is given a velocity in the direction of motion of the board. The second foot length will therefore be rubbing against water having a velocity in its own direction, and the frictional resistance will be less than for the first foot. The momentum imparted to the water up to a certain point, is accumulative, and the total resistance does not therefore increase proportionally with the length of the board.

282. Stream line theory of the resistance offered to the motion of bodies in water.

Resistance of ships. In considering the motion of water along pipes and channels of uniform section, the water has been assumed to move in "stream lines," which have a relative motion to the sides of the pipe or channel and to each other, and the resistance to the motion of the water has been considered as due to the friction between the consecutive stream lines, and between the water and the surface of the channel, these frictional resistances above certain speeds being such as to cause rotational motions in the mass of the water.

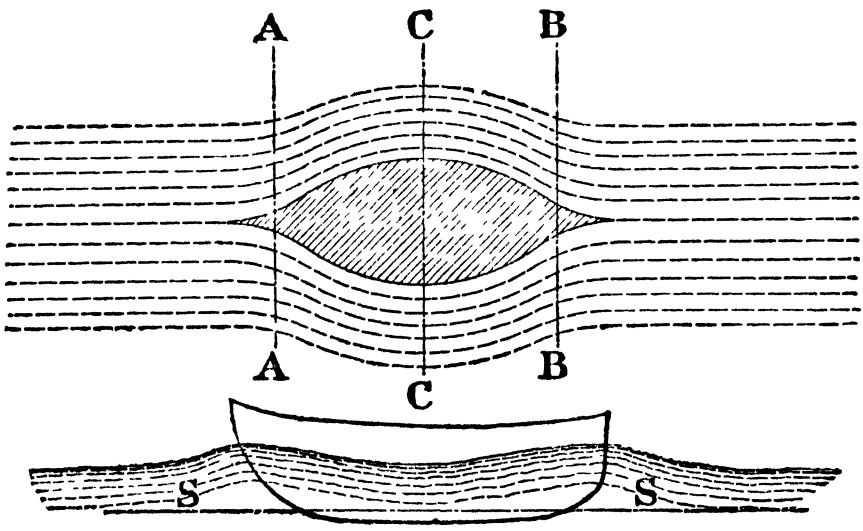

Fig. 363.

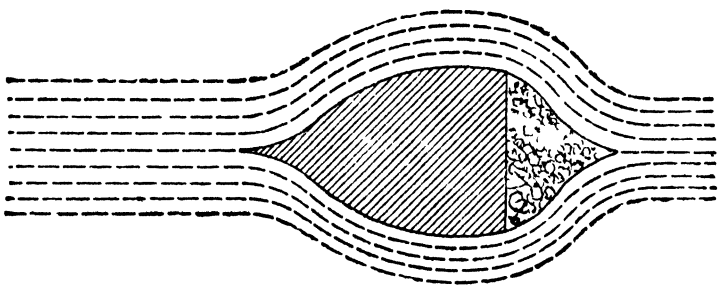

Fig. 364.

It has also been shown that at any sudden enlargement of a stream, energy is lost due to eddy motions, and if bodies, such as are shown in Figs. 110 and 111, be placed in the pipe, there is a pressure acting on the body in the direction of motion of the water. The origin of the resistance of ships is best realised by the "stream line" theory, in which it is assumed that relative to the ship the water is moving in stream lines as shown in Figs. 363, 364, consecutive stream lines also having relative motion.

According to this theory the resistance is divided into three parts.

(1) Frictional resistance due to the relative motions of consecutive stream lines, and of the stream lines and the surface of the ship.

(2) Eddy motion resistances due to the dissipation of the energy of the stream lines, all of which are not gradually brought to rest.

(3) Wave making resistances due to wave motions set up at the surface of the water by the ship, the energy of the waves being dissipated in the surrounding water.

According to the late Mr Froude, the greater proportion of the resistance is due to friction, and especially is this so in long ships, with fine lines, that is the cross section varies very gradually from the bow towards midships, and again from the midships towards the stern. At speeds less than 8 knots, Mr Froude has shown that the frictional resistance of ships, the full speed of which is about 13 knots, is nearly 90 per cent. of the whole resistance, and at full speed it is not much less than 60 per cent. He has further shown that it is practically the same as that resisting the motion of a thin rectangle, the length and area of the two sides of which are equal to the length and immersed area respectively of the ship, and the surface of which has the same degree of roughness as that of the ship.

If A is the area of the immersed surface, f the coefficient of friction, which depends not only upon the roughness but also upon the length, V the velocity of the ship in feet per second, the resistance due to friction is

$$r_f = f \,.\, \mathrm{A} \,.\, \mathrm{V}^n,$$

the value of the index n approximating to 2.

The eddy resistance depends upon the bluntness of the stern of the boat, and can be reduced to a minimum by diminishing the section of the ship gradually, as the stern is approached, and by avoiding a thick stern and stern post.

As an extreme case consider a ship of the section shown in Fig. 364, and suppose the stream lines to be as shown in the figure. At the stern of the boat a sudden enlargement of the stream lines takes place, and the kinetic energy, which has been given to the stream lines by the ship, is dissipated. The case is analogous to that of the cylinder, Fig. 111, p. 169. Due to the loss of energy, or head, there is a resultant pressure acting upon the ship in the direction of flow of the stream lines, and consequently opposing its motion.

If the ship has fine lines towards the stern, as in Fig. 363, the velocities of the stream lines are diminished gradually and the loss of energy by eddy motions becomes very small. In actual ships it is probably not more than 8 per cent. of the whole resistance.

The wave making resistance depends upon the length and the form of the ship, and especially upon the length of the "entrance" and "run." By the "entrance" is meant the front part of the ship, which gradually increases in section* until the middle body, which is of uniform section, is reached, and by the "run," the hinder part of the ship, which diminishes in section from the middle body to the stern post.

Beyond a certain speed, called the critical speed, the rate of increase in wave making resistance is very much greater than the rate of increase of speed. Mr Froude found that for the S.S. "Merkara" the wave making resistance at 13 knots, the normal speed of the ship, was 17 per cent. of the whole, but at 19 knots it was 60 per cent. The critical speed was about 18 knots.

An approximate formula for the critical speed V in knots is

$$V = \sqrt{L + L_1},$$

L being the length of entrance, and L_1 the length of the run in feet.

The mode of the formation by the ship of waves can be partly realised as follows.

Suppose the ship to be moving in smooth water, and the stream lines to be passing the ship as in Fig. 363. As the bow of the boat strikes the dead water in front there is an increase in pressure, and in the horizontal plane SS the pressure will be greater at the bow than at some distance in front of it, and consequently the water at the bow is elevated above the normal surface.

Now let AA, BB, and CC be three sections of the ship and the stream lines.

Near the midship section CC the stream lines will be more closely packed together, and the velocity of flow will be greater, therefore, than at AA or BB. Assuming there is no loss of energy in a stream line between AA and BB and applying Bernouilli's theorem to any stream line,

$$\frac{p_A}{w} + \frac{v_A^2}{2g} = \frac{p_C}{w} + \frac{v_C^2}{2g} = \frac{p_B}{w} + \frac{v_B^2}{2g},$$

* See Sir W. White's *Naval Architecture*, *Transactions of Naval Architects*, 1877 and 1881.

and since v_A and v_B are less than v_C,

$$\frac{p_A}{w} \text{ and } \frac{p_B}{w} \text{ are greater than } \frac{p_C}{w}.$$

The surface of the water at AA and BB is therefore higher than at CC and it takes the form shown in Fig. 363.

Two sets of waves are thus formed, one by the advance of the bow and the other by the stream lines at the stern, and these wave motions are transmitted to the surrounding water, where their energy is dissipated. This energy, as well as that lost in eddy motions, must of necessity have been given to the water by the ship, and a corresponding amount of work has to be done by the ship's propeller. The propelling force required to do work equal to the loss of energy by eddy motions is the eddy resistance, and the force required to do work equal to the energy of the waves set up by the ship is the wave resistance.

To reduce the wave resistance to a minimum the ship should be made very long, and should have no parallel body, or the entire length of the ship should be devoted to the entrance and run. On the other hand for the frictional resistance to be small, the area of immersion must be small, so that in any attempt to design a ship the resistance of which shall be as small as possible, two conflicting conditions have to be met, and, neglecting the eddy resistances, the problem resolves itself into making the sum of the frictional and wave resistances a minimum.

Total resistance. If R is the total resistance in pounds, r_f the frictional resistance, r_e the eddy resistance, and r_w the wave resistance,

$$R = r_f + r_e + r_w.$$

The frictional resistance r_f can easily be determined when the nature of the surface is known. For painted steel ships f is practically the same as for the varnished boards, and at 10 feet per second the frictional resistance is therefore about $\frac{1}{4}$ lb. per square foot, and at 20 feet per second 1 lb. per square foot. The only satisfactory way to determine r_e and r_w for any ship is to make experiments upon a model, from which, by the principle of similarity, the corresponding resistances of the ship are deduced. The horse-power required to drive the ship at a velocity of V feet per second is

$$HP = \frac{RV}{550}.$$

To determine the total resistance of the model the apparatus shown in Fig. 362 is used in the same way as in determining the frictional resistance of thin boards.

283. Determination of the resistance of a ship from the resistance of a model of the ship.

To obtain the resistance of the ship from the experimental resistance of the model the principle of similarity, as stated by Mr Froude, is used. Let the linear dimensions of the ship be D times those of the model.

Corresponding speeds. According to Mr Froude's theory, for any speed V_m of the model, the speed of the ship at which its resistance must be compared with that of the model, or the corresponding speed V_s of the ship, is

$$V_s = V_m \sqrt{D}.$$

Corresponding resistances. If R_m is the resistance of the model at the velocity V_m, and it be assumed that the coefficients of friction for the ship and the model are the same, the resistance R_s of the ship at the corresponding speed V_s is

$$R_s = R_m D^3.$$

As an example, suppose a model one-sixteenth of the size of the ship; the corresponding speed of the ship will be four times the speed of the model, and the resistance of the ship at corresponding speeds will be 16^3 or 4096 times the resistance of the model.

Correction for the difference of the coefficients of friction for the model and ship. The material of which the immersed surface of the model is made is not generally the same as that of the ship, and consequently R_s must be corrected to make allowance for the difference of roughness of the surfaces. In addition the ship is very much longer than the model, and the coefficient of friction, even if the surfaces were of the same degree of roughness, would therefore be less than for the model.

Let A_m be the immersed surface of the model and A_s of the ship.

Let f_m be the coefficient of friction for the model and f_s for the ship, the values being made to depend not only upon the roughness but also upon the length. If the resistance is assumed to vary as V^2, the frictional resistance of the model at the velocity V_m is

$$r_m = f_m A_m V_m^2,$$

and for the ship at the corresponding speed V_s the frictional resistance is

$$r_s = f_s A_s V_s^2.$$

But $$A_s = A_m D^2$$

and $$V_s^2 = V_m^2 D,$$

and, therefore,
$$r_s = f_s A_m V_m^2 D^3$$
$$= \frac{f_s}{f_m} r_m D^3.$$

Then the resistance of the ship is
$$R_s = (R_m - r_m) D^3 + r_s$$
$$= \left\{R_m + r_m \left(\frac{f_s}{f_m} - 1\right)\right\} D^3.$$

Determination of the curve of resistance of the ship from the curve of resistance of the model. From the experiments on the model a curve having resistances as ordinates and velocities as abscissae is drawn as in Fig. 365. If now the coefficients of friction for the ship and the model are the same, this curve, by an alteration of the scales, becomes a curve of resistance for the ship.

For example, in the figure the dimensions of the ship are supposed to be sixteen times those of the model. The scale of velocities for the ship is shown on CD, corresponding velocities being four times as great as the velocity of the model, and the scale of resistances for the ship is shown at EH, corresponding resistances being 4096 times the resistance of the model.

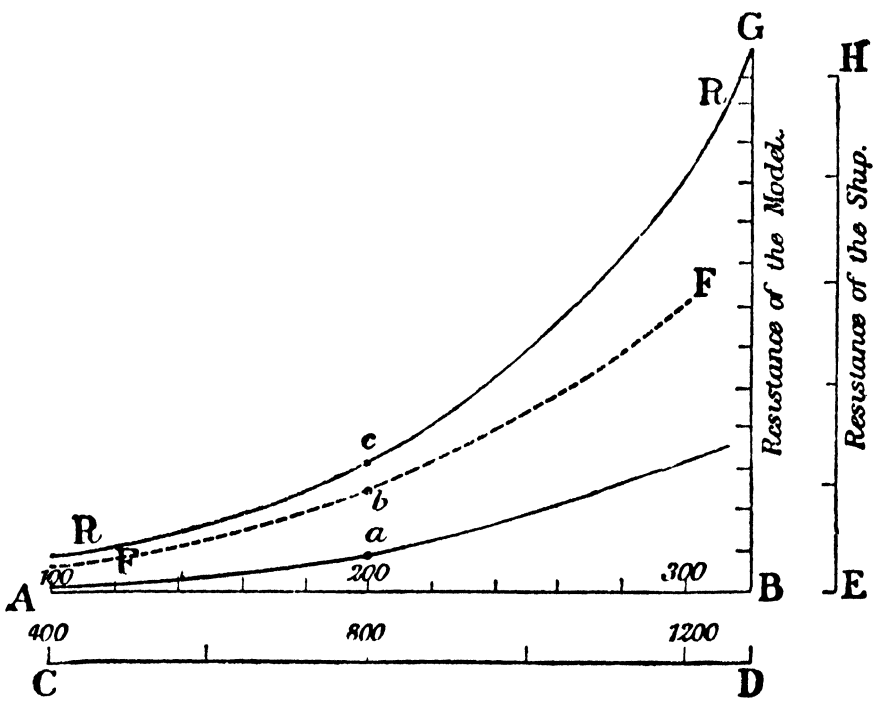

Fig. 365.

Mr Froude's method of correcting the curve for the difference of the coefficients of friction for the ship and the model. From the formula
$$r_m = f_m A_m V_m^n,$$

the frictional resistance of the model for several values of V_m is calculated, and the curve FF plotted on the same scale as used for the curve RR. The wave and eddy making resistance at any velocity is the ordinate between FF and RR. At velocities of 200 feet per minute for the model and 800 feet per minute for the ship, for example, the wave and eddy making resistance is *bc*, measured on the scale BG for the model and on the scale EH for the ship.

The frictional resistance of the ship is now calculated from the formula $r_s = f_s A_s V_s^n$, and ordinates are set down from the curve FF, equal to r_s, to the scale for ship resistance. A third curve is thus obtained, and at any velocity the ordinate between this curve and RR is the resistance of the ship at that velocity. For example, when the ship has a velocity of 800 feet per minute the resistance is *ac*, measured on the scale EH.

EXAMPLES.

(1) Taking skin friction to be 0·4 lb. per square foot at 10 feet per second, find the skin resistance of a ship of 12,000 square feet immersed surface at 15 knots (1 knot = 1·69 feet per second). Also find the horse-power to drive the ship against this resistance.

(2) If the skin friction of a ship is 0·5 of a pound per square foot of immersed surface at a speed of 6 knots, what horse-power will probably be required to obtain a speed of 14 knots, if the immersed surface is 18,000 square feet? You may assume the maximum speed for which the ship is designed is 17 knots.

(3) The resistance of a vessel is deduced from that of a model $\frac{1}{16}$th the linear size. The wetted surface of the model is 29·4 square feet, the skin friction per square foot, in fresh water, at 10 feet per second is 0·3 lb., and the index of velocity is 1·94. The skin friction of the vessel in salt water is 60 lbs. per 100 square feet at 10 knots, and the index of velocity is 1·83. The total resistance of the model in fresh water at 200 feet per minute is 1·46 lbs. Estimate the total resistance of the vessel in salt water at the speed corresponding to 200 feet per minute in the model. Lond. Un. 1906.

(4) How from model experiments may the resistance of a ship be inferred? Point out what corrections have to be made. At a speed of 300 feet per minute in fresh water, a model 10 feet in length with a wet skin of 24 square feet has a total resistance of 2·39 lbs., 2 lbs. being due to skin resistance, and ·39 lb. to wave-making. What will be the total resistance at the corresponding speed in salt water of a ship 25 times the linear dimensions of the model, having given that the surface friction per square foot of the ship at that speed is 1·3 lbs.? Lond. Un. 1906.

CHAPTER XIV.

STREAM LINE MOTION.

284. Hele Shaw's experiments on the flow of thin sheets of water.

Professor Hele Shaw* has very beautifully shown, on a small scale, the form of the stream lines in moving masses of water under varying circumstances, and has exhibited the change from stream line to sinuous, or rotational flow, by experiments on the flow of water at varying velocities between two parallel glass plates. In some of the experiments obstacles of various forms were placed between the plates, past which the water had to flow, and in others, channels of various sections were formed through which the water was made to flow. The condition of the water as it flowed between the plates was made visible by mixing with it a certain quantity of air, or else by allowing thin streams of coloured water to flow between the plates along with the other water. When the velocity of flow was kept sufficiently low, whatever the form of the obstacle in the path of the water, or the form of the channel along which it flowed, the water persisted in stream line flow. When the channel between the plates was made to enlarge suddenly, as in Fig. 58, or to pass through an orifice, as in Fig. 59, and as long as the flow was in stream lines, no eddy motions were produced and there were no indications of loss of head. When the velocity was sufficiently high for the flow to become sinuous, the eddy motions were very marked. When the motion was sinuous and the water was made to flow past obstacles similar to those indicated in Figs. 110 and 111, the water immediately in contact with the down-stream face was shown to be at rest. Similarly the water in contact with the annular ring surrounding a sudden enlargement appeared to be at rest and the assumption made in section 51 was thus justified.

* *Proceedings of Naval Architects*, 1897 and 1898. *Engineer*, Aug. 1897 and May 1898.

When the flow was along channels and sinuous, the sinuously moving water appeared to be separated from the sides of the channel by a thin film of water, which Professor Hele Shaw suggested was moving in stream lines, the velocity of which in the film diminish as the surface of the channel is approached. The experiments also indicated that a similar film surrounded obstacles of ship-like and other forms placed in flowing water, and it was inferred by Professor Hele Shaw that, surrounding a ship as it moves through still water, there is a thin film moving in stream lines relatively to the ship, the shearing forces between which and the surrounding water set up eddy motions which account for the skin friction of the ship.

285. Curved stream line motion.

Let a mass of fluid be moving in curved stream lines, and let AB, Fig. 366, be any one of the stream lines.

At any point c let the radius of curvature of the stream line be r and let O be the centre of curvature.

Consider the equilibrium of an element $abde$ surrounding the point c.

Let W be the weight of this element.

p be the pressure per unit area on the face bd.

$p + \partial p$ be the pressure per unit area on the face ae.

θ be the inclination of the tangent to the stream line at c to the horizontal.

a be the area of each of the faces bd and ae.

v be the velocity of the stream line at c.

∂r be the thickness ab of the stream line.

If then the stream line is in a vertical plane the forces acting on the element are

(1) W due to gravity,

(2) the centrifugal force $\frac{Wv^2}{gr}$ acting along the radius away from the centre, and

(3) the pressure $a\partial p$ acting along the radius towards the centre of curvature O.

Resolving along the radius through c,

$$a\partial p - \frac{Wv^2}{gr} + W\cos\theta = 0,$$

or since

$$W = wa\partial r,$$

$$\frac{dp}{dr} = \frac{wv^2}{gr} - w\cos\theta \quad \text{.....(1).}$$

If the stream line is horizontal, as in the case of water flowing

round the bend of a river, Oc is horizontal and the component of W along Oc is zero.

Then $$\frac{dp}{dr} = \frac{w}{g}\frac{v^2}{r} \quad \text{.....(2).}$$

Integrating between the limits R and R_1 the difference of pressure on any horizontal plane at the radii R and R_1 is

$$p_1 - p = \frac{w}{g}\int_R^{R_1} \frac{v^2}{r}\,dr \quad \text{.....(3),}$$

which can be integrated when v can be written as a function of r.

Now for any horizontal stream line, applying Bernoulli's equation,

$$\frac{p}{w} + \frac{v^2}{2g} \text{ is constant,}$$

or $$\frac{p}{w} + \frac{v^2}{2g} = \text{H}.$$

Differentiating $$\frac{1}{w}\frac{dp}{dr} + \frac{vdv}{gdr} = \frac{d\text{H}}{dr} \quad \text{.....(4).}$$

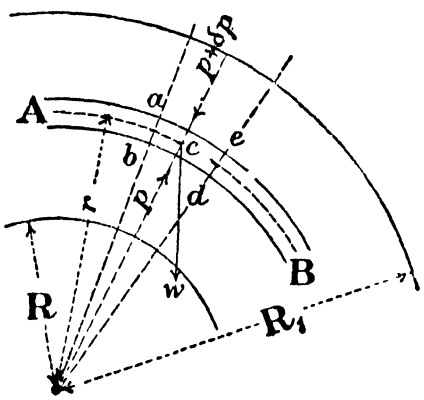

Fig. 366.

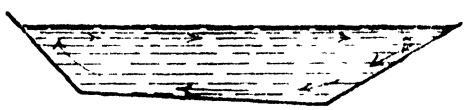

Fig. 367.

Free vortex. An important case arises when H is constant for all the stream lines, as when water flows round a river bend, or as in Thomson's vortex chamber.

Then $$\frac{1}{w}\frac{dp}{dr} = \frac{-vdv}{gdr} \quad \text{.....(5).}$$

Substituting the value of $\frac{dp}{dr}$ from (5) in (2)

$$\frac{-wv}{g}\frac{dv}{dr} = \frac{w}{g}\cdot\frac{v^2}{r},$$

from which $$rdv + vdr = 0,$$

and therefore by integration

$$vr = \text{constant} = \text{C}$$

Equation (3) now becomes

$$\frac{p_1 - p}{w} = \frac{C^2}{g}\int_R^{R_1} \frac{dr}{r^3}$$

$$= \frac{C^2}{2g}\left(\frac{1}{R^2} - \frac{1}{R_1^2}\right).$$

Forced vortex. If, as in the turbine wheel and centrifugal pump, the angular velocities of all the stream lines are the same, then in equation (3)

$$v = \omega r$$

and

$$\frac{p_1 - p}{w} = \frac{\omega}{g}\int_R^{R_1} r dr$$

$$= \frac{\omega^2}{2g}(R_1^2 - R^2).$$

Scouring of the banks of a river at the bends. When water runs round a bend in a river the stream lines are practically concentric circles, and since at a little distance from the bend the surface of the water is horizontal, the head H on any horizontal in the bend must be constant, and the stream lines form a free vortex. The velocity of the outer stream lines is therefore less than the inner, while the pressure head increases as the outer bank is approached, and the water is consequently heaped up towards the outer bank. The velocity being greater at the inner bank it might be expected that it will be scoured to a greater extent than the outer. Experience shows that the opposite effect takes place. Near the bed of the river the stream lines have a less velocity (see page 209) than in the mass of the fluid, and, as James Thomson has pointed out, the rate of increase of pressure near the bed of the stream, due to the centrifugal forces, will be less than near the surface. The pressure head near the bed of the stream, due to the centrifugal forces, is thus less than near the surface, and this pressure head is consequently unable to balance the pressure head due to the heaping of the surface water, and cross-currents are set up, as indicated in Fig. 367, which cause scouring of the outer bank and deposition at the inner bank.

APPENDIX.

1. Coefficients of discharge:

(*a*) for circular sharp-edged orifices.

Experiments by Messrs Judd and King at the Ohio University on the flow through sharp-edged orifices from $\frac{3}{4}$ inch to $2\frac{1}{2}$ inches diameter showed that the coefficient was constant for all heads between 5 and 92 feet, the values of the coefficients being as follows. (*Engineering News*, 27th September, 1906.)

Diameter of orifice in inches	Coefficients
$2\frac{1}{2}$	0·5956
2	0·6083
$1\frac{1}{2}$	0·6085
1	0·6097
$\frac{3}{4}$	0·6111

The results in the following table have been determined by Bilton (*Victorian Institute of Engineers, Library Inst. C. E. Tract*, 8vo. Vol. 629). Bilton claims that above a certain "critical" head the coefficient remains constant, but below this head it increases.

Coefficients of discharge for standard circular orifices.

Head in inches	Diameter of orifices in inches						
	$2\frac{1}{2}$ and over	2	$1\frac{1}{2}$	1	$\frac{3}{4}$	$\frac{1}{2}$	$\frac{1}{4}$
45 and over	0·598	0·599	0·603	0·608	0·613	0·621	0·628
22						0·621	0·638
18					0·613	0·623	0·643
17	0·598	0·599	0·603	0·608	0·614	0·625	0·645
12	0·600	0·601	0·606	0·612	0·618	0·630	0·653
9	0·604	0·606	0·612	0·619	0·623	0·637	0·660
6	0·610	0·612	0·618	0·626	0·632	0·643	0·669
3				0·640	0·646	0·657	0·680
2						0·663	0·683

(b) for triangular notches.

Recent experiments by Barr (*Engineering*, April 1910) on the flow through triangular notches having an angle of 90 degrees showed that the coefficient C (page 85) varies, but the mean value is very near to that given by Thomson.

The coefficients as determined by Barr are given in the following table:

Head	2″	2½″	3″	3½″	4″	7″	10″
Coefficient C	2·586	2·564	2·551	2·541	2·533	2·505	2·49

2. The critical velocity in pipes. Effect of temperature.

A simple apparatus, Fig. 368, which can be made in any laboratory and a description of which it is hoped may be of value to teachers, has been used by the author for experiments on the flow of water in pipes.

Three carefully selected pieces of brass tubing 0·5 cms. diameter, each about 6 feet long, were taken, and the diameters measured by filling with water at 60° F. The three tubes were connected at AA by being sweated into brass blocks, holes through which were drilled of the same diameter as the outsides of the tubes. Between the two ends of the tubes, while being soldered in the blocks, was inserted a piece of thin hard steel about $\frac{1}{200}$th of an inch in thickness. The tubes were thus fixed in line, while at the same time a connection is made to the gauge G from each end of the tube AA.

To the ends of each of the end tubes were fixed other blocks B into which were inserted tubes T. Inside each of these tubes was placed a thermometer. Flow could take place through the tubes T into vessels V and V_1. During any experiment a constant head was maintained by allowing the water to flow into the tank S at such a rate by the pipe P that there was also a slight overflow down the pipe P′.

Between the tank and the pipe was a coil which was surrounded by a tank in which was a mass of water kept heated by bunsen burners, or by the admission of steam.

Flow from the tank could be adjusted by the cock C or by the pinch taps (1) to (4).

The pinch tap (4) was found very useful in that by opening and closing, the quantity of water flowing through the coil could be kept constant while the flow through the pipe was changed.

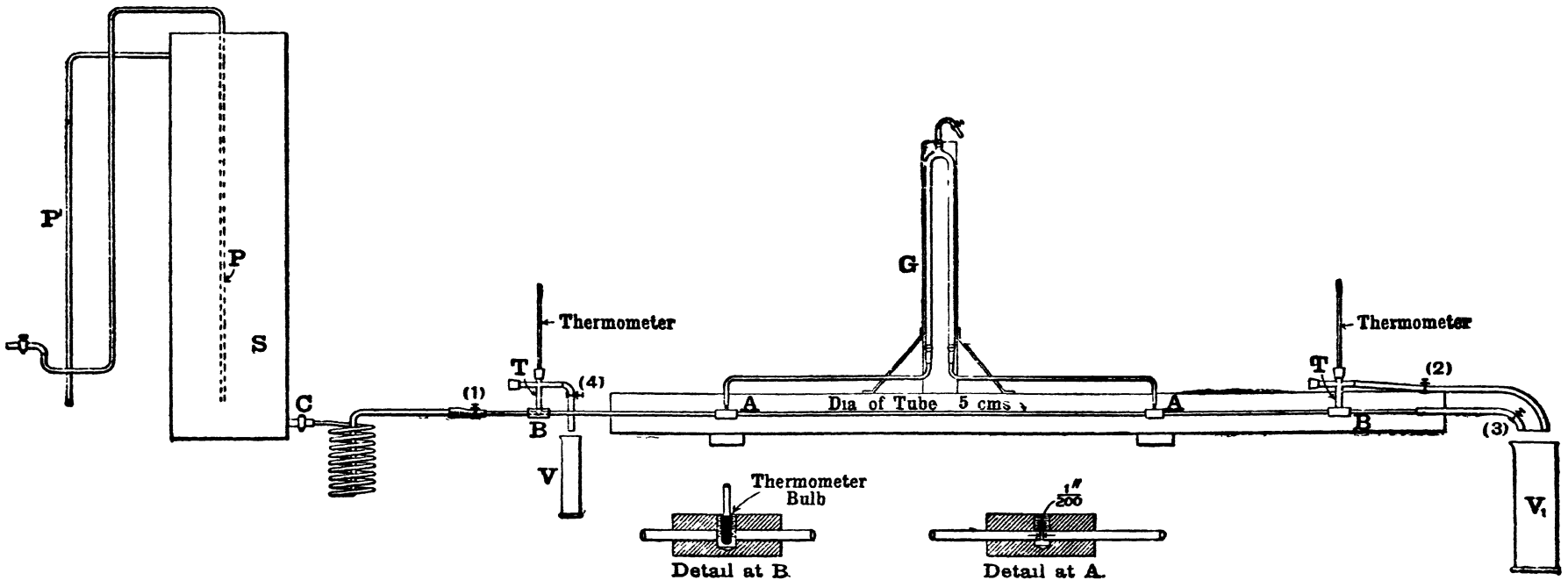

Fig. 368. Diagram of apparatus for determining critical velocity in a pipe at varying temperatures.

The loss of head was measured at the air gauge G in cms. of water.

The results obtained at various temperatures are shown plotted in Fig. 369.

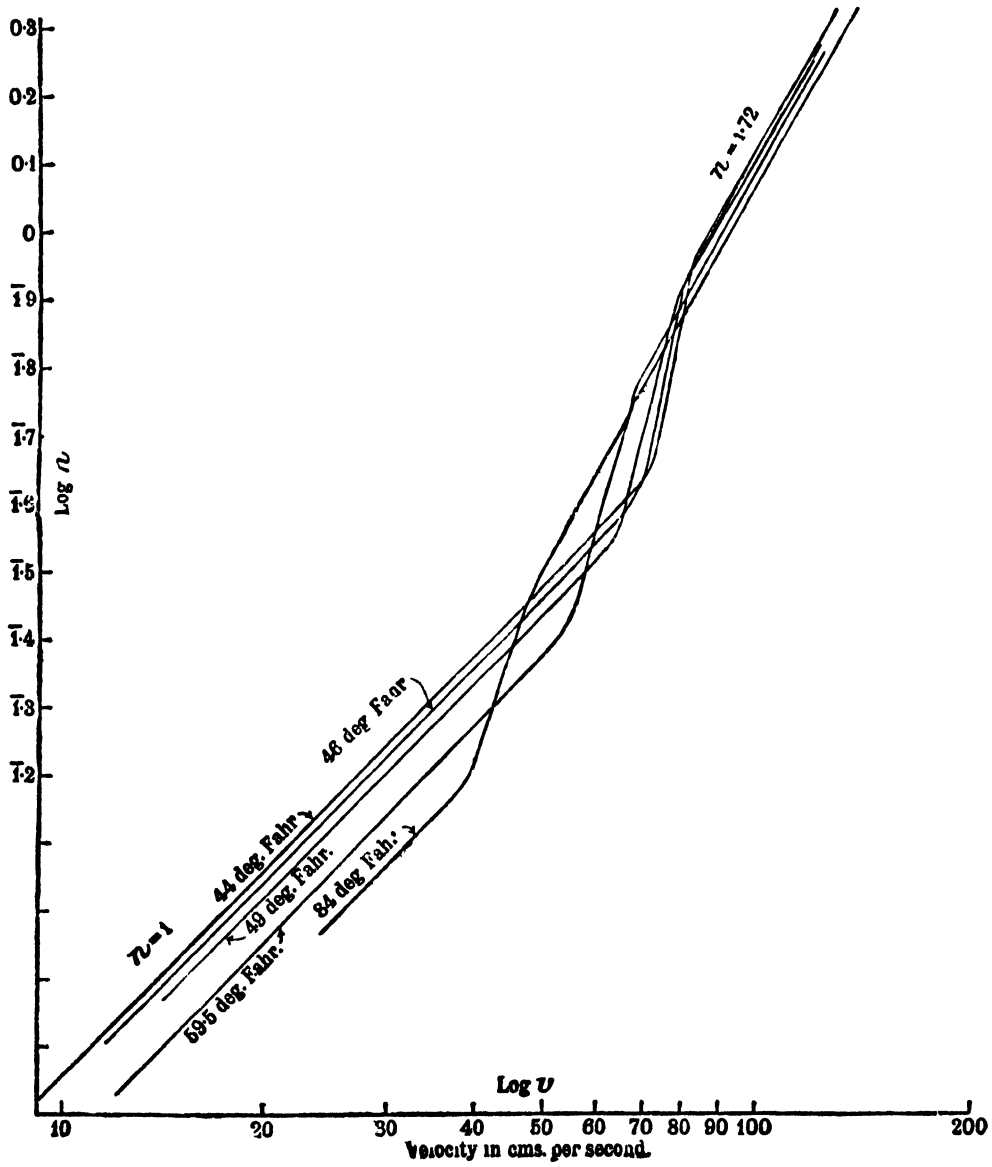

Fig. 369.

At any temperature, for velocities below the critical velocity, the columns of water in the gauge were very steady, oscillations scarcely being perceivable with the cathetometer telescope. At the critical velocity the columns in the gauge become very unsteady and oscillate through a distance of two or three centimetres. When the upper critical velocity is passed the columns again become steady.

3. Losses of head in pipe bends.

The experimental data, as remarked in the text, on losses of head in pipe bends are not very complete. The following table gives results obtained by Schoder* from experiments on a series of 6 inches diameter bends of different radii. The experiments were carried out by connecting the bends in turn to two lengths of straight pipe 6 inches diameter, the head lost at various velocities in one of the lengths having been previously carefully determined. The bend being in position the loss of head in the bend and in the straight piece was then found and the loss caused by the bend obtained by difference.

In the table the length of straight pipe is given in which the loss of head would be the same as in the bend.

Losses of head caused by 90 degree bends expressed in terms of the length of straight pipe of the same diameter in which a loss of head would occur equal to the loss caused by the bend.

Diameter of all bends 6″ (very nearly).

No. of curve	Material	Radius in feet	Radius in pipe diameters	Length of centre line in feet	Equivalent lengths of pipe on centre lines			
					Velocity in feet per second			
					3	5	10	16
	Wrought iron	10	20	16·77	8·4	6·7	4·4	3·2
	"	7·50	15	12·84	3·2	1·6	0·2	
	"	5·00	10	9·01	5·0	3·5	2·1	1·4
	"	4·00	8	7·34	6·8	5·2	3·9	3·0
	"	3·00	6	5·89	6·8	5·1	3·9	3·2
	"	2·50	5	5·08	3·0	2·5	2·1	2·2
		2·00	4	3·64	5·6	4·3	3·5	2·7
		1·50	3	2·86	4·8	4·1	3·5	2·7
		1·08	2·16	2·54	5·2	4·4	3·9	3·0
		0·95	1·9	1·75	6·0	5·1	4·6	3·8
		0·88	1·76	3·62	5·8	5·8	5·6	5·7
		0·67	1·34	1·05	9·8	8·6	7·7	7·0

Fig. 370 shows the loss of head due to 90 degree bends in pipes 3 inches and 4 inches diameter as obtained by Dr Brightmore†. The forms of the curves are very similar to the curves obtained by Schoder for the 6 inch bends quoted above. Brightmore found that the loss of head caused by square elbows in 3 inches and

* *Proc. Am. S.C.E.* Vol. XXXIV. p. 416.

† *Proc. Inst. C.E.* Vol. CLXIX. p. 323.

4 inches diameter pipes was the same and was equal to $\frac{1{\cdot}17v^2}{2g}$, v being the velocity of the water in the pipe in feet per second.

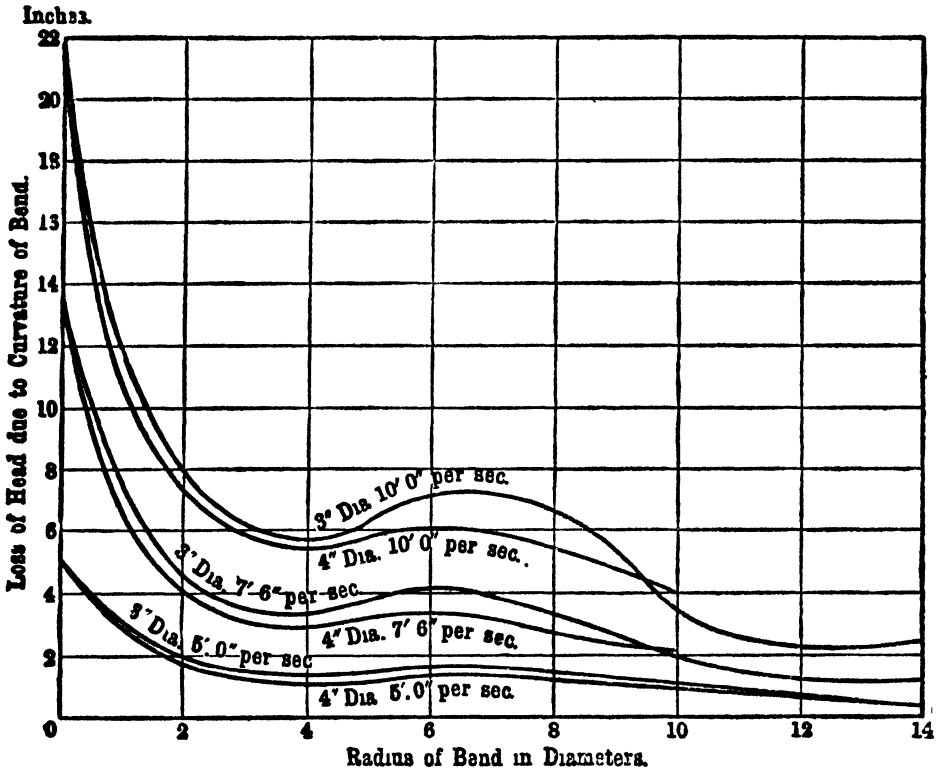

Fig. 370. Loss of head due to bends in pipes 3″ and 4″ in diameter.

Davies* gives the loss of head in a $2\frac{1}{16}''$ diameter elbow as $0{\cdot}0113v^2$ and in a $2\frac{3}{8}''$ diameter elbow with short turn as $0{\cdot}0202v^2$.

4. The Pitot tube.

There has been considerable controversy as to the correct theory of the Pitot tube, some authorities contending that the impact head h produced by the velocity of the moving stream impinging on the tube with the plane of its opening facing up stream should be expressed as $h = \frac{kv^2}{g}$, and others contending that it should be expressed as $h = k_1 \frac{v^2}{2g}$.

If the momentum of the water per second which would flow through an area equal to the area of the impact orifice is destroyed the pressure on the area is equal to $\frac{wav^2}{g}$, and the height of the column of water maintained by this pressure would be $h = \frac{v^2}{g}$.

* *Proc. Am. S.C.E.*, Sep. 1908, Vol. xxxiv. p. 1037.

The assumption made in the text, which agrees with experiment, shows that the height is equal to $\frac{v^2}{2g}$, and it has therefore been contended that the destroyed momentum of the mass should not be considered as producing the head, but rather the "velocity head." Those who maintain this position do not recognise the simple fact that when it is stated that the kinetic energy of the stream is destroyed, it is exactly the same thing as saying that the momentum of the stream is destroyed, and that the reason why the head is not equal to $\frac{v^2}{g}$ is that the momentum of a mass of water equal to the mass which passes through an area equal to the area of the impact surface is not destroyed.

Experiments by White*, the author and others show that when a jet of water issuing from an orifice is made to impinge on a plate having its plane perpendicular to the axis of the jet, the pressure on the plate is distributed over an area much greater than the area of the original jet, and the maximum intensity of pressure occurs at a point on the plate coinciding with the axis of the jet; and is equal to one-half the intensity of pressure that would obtain if the whole pressure was distributed over an area equal to the area of the jet. In this case the whole momentum is destroyed on an area much greater than the area of the jet. The total pressure on the plate however divided by the area of the jet is equal to

$$\frac{v^2}{g}.$$

5. The Hydraulic Ram.

In the text no theory is attempted of the working of this interesting apparatus, only a very imperfect and elementary description of the mode of working being attempted. Those interested are referred to an able and voluminous paper by Leroy Francis Harza (*Bulletin of the University of Wisconsin*) in which the Hydraulic Ram is dealt with very fully from both an experimental and theoretical point of view.

6. Circular Weirs.

If a vertical pipe, Fig. 371, with the horizontal end AB carefully faced is placed in a tank and water, having its surface a reasonable distance above AB, flows down the pipe as indicated in the figure, Gourley† has shown that the flow in cubic feet per

* *Journ. of the Assoc. of Eng. Soc.* August 1901.
† *Proc. Inst. C.E.* Vol. CLXXXIV.

second can be expressed in terms of the head H and the circumferential length of the weir by the formula

$$Q = KLH^n,$$

in which n is 1·42, H and L are in feet, and K for different diameters has the values shown in the table:

Circular Weirs. Values of K in formula $Q = KLH^n$.

Diameter of Pipe, inches	6 91	10 08	13 70	19·40	25·90
K	2 93	2·94	2 97	2·99	3 03

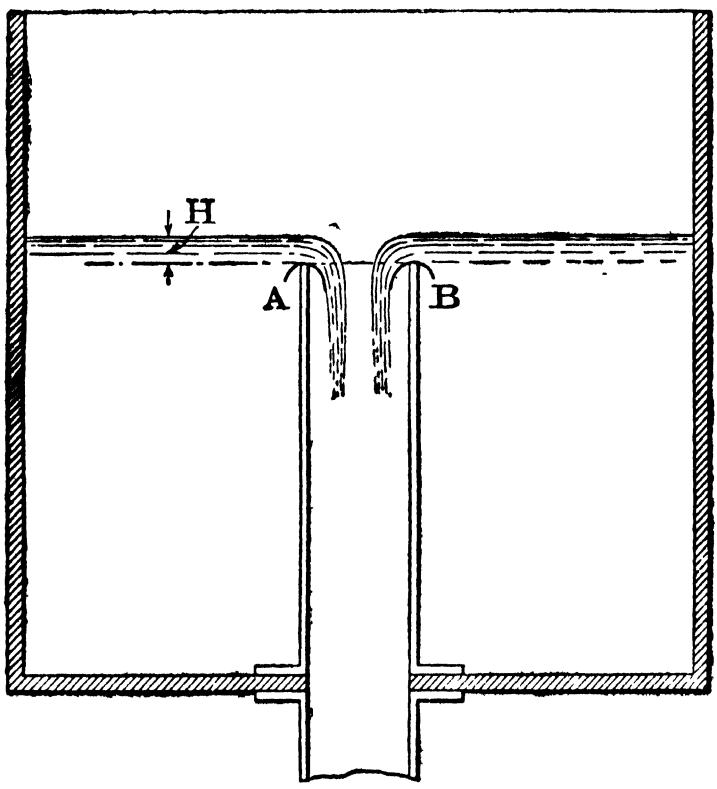

Fig. 371.

For reliable results H should not be greater than $\frac{1}{5}$th of the diameter of the pipe, and as long as H is large enough for the water to leap clear of the inside of the pipe the thickness of the pipe is immaterial. The air must be freely admitted below the nappe. The flow is affected by the size of the chamber, but not to any very considerable extent, as long as the chamber is large.

For reliable results H should not be greater than $\frac{1}{5}$th of the diameter of the pipe, and as long as H is large enough for the water to leap clear of the inside of the pipe the thickness of the pipe is immaterial. The air must be freely admitted below the nappe. The flow is affected by the size of the chamber, but not to any very considerable extent, as long as the chamber is large.

7. Theory of dimensions applied to the flow of fluids.

The theory of viscous flow as developed by Sir G. Stokes accounts satisfactorily for what is observed when flow of fluids takes place in capillary tubes. When the flow is in tubes of larger diameters and the velocity is not small, the theory of dynamical similarity, as applied by Reynolds, and the method of dimensions, as shown by Lord Rayleigh*, determine the conditions of flow.

Let it be assumed that a fluid of density ρ is moving along a tube and that the drop of pressure in a length l is p expressed in suitable units. Then the dimensions of the loss of pressure per unit area is equal to a force divided by an area. Whatever the law connecting the loss of pressure with other quantities may be, the dimensions of the pressure must be also those of a force divided by an area. The dimensions of a force divided by an area are $\frac{M}{LT^2}$ where M is a mass, L is a length, and T time.

If then the drop of pressure or loss of head depends upon:

(1) the density of the fluid ρ,

(2) the viscosity of the fluid η or a coefficient of dynamical viscosity

$$\nu = \frac{\eta}{\rho},$$

(3) the velocity v,

(4) the lateral dimensions of the pipe d, and

(5) the length L,

$$p \propto d^x \eta^y \rho^z v^n \mathrm{L} \quad \text{.....(1)},$$

and, therefore, the dimensions of the expression (1) are $\frac{\mathrm{ML}}{\mathrm{T}^2}$.

The † viscosity η is a stress per unit area multiplied by a length and divided by a velocity.

* Lord Rayleigh's *Scientific Papers*, Vol. III. p. 575.
† See books on Physics.

Therefore, the dimensions of

$$\eta = \frac{M}{LT}.$$

Again
$$\rho = \frac{\text{Mass}}{\text{Volume}} = \frac{M}{L^3}$$

and
$$v = \frac{L}{T}.$$

Therefore, from (1)

$$\frac{M}{LT^2} \propto L^x \left(\frac{M}{LT}\right)^y \left(\frac{M}{L^3}\right)^z \left(\frac{L}{T}\right)^n L \quad \text{.....(2).}$$

That is

$$y + z = 1 \quad \text{.....} \quad \text{. ...} \quad (3),$$

$$x - y - 3z + n + 1 = -1 \quad \text{..} \quad \text{.. ..} \quad (4)$$

and
$$-y - n = -2 \quad \text{.....} \quad \text{.....} \quad (5).$$

From (3), (4) and (5)

$$y = 2 - n,$$
$$z = n - 1,$$
$$x = n - 3.$$

Therefore,

$$p \propto d^{n-3}\eta^{2-n}\rho^{n-1}v^n L$$

or since $\frac{p}{\rho}$ is the head lost in the pipe

$$h \propto d^{n-3}\eta^{2-n}\rho^{n-2}v^n L$$

or
$$h \propto d^{n-3}\left(\frac{\eta}{\rho}\right)^{2-n} v^n L;$$

$\frac{\eta}{\rho}$ is the coefficient ν which has the dimensions $\frac{L^2}{T}$.

Therefore,

$$h \propto d^{n-3}\nu^{2-n}v^n L.$$

Then
$$\frac{h}{L} = i = \frac{k_0 \nu^{2-n} v^n}{d^{3-n}}$$
$$= \frac{kv^n}{d^{3-n}},$$

k being a constant when ν is supposed constant.

As shown on page 134 this result agrees with experiments for smooth pipes.

8. General formula for friction in smooth pipes.

Careful investigations of the flow of air, oil and water through smooth pipes of diameters varying from 0·361 cms. to 12·62 cms. have been carried out at the National Physical Laboratory during recent years*.

The loss of energy at varying temperatures and for velocities varying from 5 cms. to 5000 cms. per second have been determined in the case of water, and the distribution of velocity in pipes of moving air and water have also been carefully determined. These latter experiments have shown that if v is the mean velocity of the fluid in the pipe, d the diameter of the pipe and ν the dynamical viscosity of the fluid, the velocity curves are similar for different fluids as long as vd/ν is constant. If now R is the resistance of the pipe per unit area and ρ the density of the fluid flowing through the pipe, the Principle of Dynamical Similarity demands that when for various fluids and conditions of flow vd/ν is constant then for these cases $R/\rho v^2$ must also be constant. By plotting points therefore having $R/\rho v^2$ as ordinates and vd/ν as abscissae all cases of motion in smooth pipes should be represented by a smooth curve, and by plotting the logarithms of these quantities a straight line should be obtained. The plottings of the logs of these quantities obtained from the experiments at the National Physical Laboratory and those obtained by other experiments show however that the points do not lie about a straight line, but Professor Lees† has shown that if points be plotted having

$$\log\left(\frac{R}{\rho v^2} - 0{\cdot}0009\right) \text{ as ordinates,}$$

and $\log vd/\nu$ as abscissae the points do lie on the straight line

$$\log\left(\frac{R}{\rho v^2} - 0{\cdot}0009\right) + 0{\cdot}35 \log\frac{vd}{\nu} = \log 0{\cdot}0765,$$

or

$$\frac{R}{\rho v^2} = 0{\cdot}0009 + \frac{0{\cdot}0765}{\left(\frac{vd}{\nu}\right)^{0{\cdot}35}}$$

which satisfies the Principle of Dynamical Similarity.

The value of $\nu\rho$ for water in dynes is $\dfrac{0{\cdot}017756}{1 + 0{\cdot}03368T + 0{\cdot}000221T^2}$ which at 15 deg. Cent. is 0·0114 and the density is nearly unity.

* Stanton, *Proc. R.S.* Vol. LXXXV. p. 366; Stanton and Pannell, *Phil. Trans.* A. Vol. CCXIV. p. 299.

† *Proc. R.S.* A. Vol. XCI.

Then the resistance R in dynes per sq. cm. is

$$R = \frac{0{\cdot}0159v^{1{\cdot}65}}{d^{0{\cdot}35}} + 0{\cdot}0009v^2.$$

If p and p_1 are the pressures in dynes per sq. cm. at two sections l cm. apart,

$$R\pi dl = (p - p_1)\frac{\pi d^2}{4},$$

and

$$p - p_1 = l\left(\frac{0{\cdot}0636v^{1{\cdot}65}}{d^{1{\cdot}35}} + \frac{0{\cdot}0036v^2}{d}\right).$$

If p and p_1 are in pounds per sq. foot and d and l in feet,

$$p - p_1 = l\left(\frac{0{\cdot}01128v^{1{\cdot}65}}{d^{1{\cdot}35}} + \frac{0{\cdot}006981v^2}{d}\right).$$

If the difference of pressure is measured in feet of water h, then

$$h = l\left(\frac{0{\cdot}00018v^{1{\cdot}65}}{d^{1{\cdot}35}} + \frac{0{\cdot}000112v^2}{d}\right).$$

For air at a temperature of 15° C. and at a pressure of 760 mm. of mercury, the difference of pressure p in pounds per sq. foot at sections a distance l feet apart is

$$(p - p_1) = l\left(\frac{0{\cdot}0000332v^{1{\cdot}65}}{d^{1{\cdot}35}} + \frac{0{\cdot}0000085v^2}{d}\right).$$

If the pressure difference is measured in inches of water h, then

$$h = l\left(\frac{0{\cdot}00000637v^{1{\cdot}65}}{d^{1{\cdot}35}} + \frac{0{\cdot}00000163v^2}{d}\right).$$

9. The moving diaphragm method of measuring the flow of water in open channels.

The flow of water along large regular-shaped channels can be measured expeditiously and with a considerable degree of accuracy by means of a diaphragm fixed to a travelling carriage as in Fig. 372. The apparatus is expensive, but in cases where it is difficult to keep the flow in the channel steady for any considerable length of time, as for example in the case of large turbines under test, and there is not sufficient head available to allow of using a weir, the rapidity with which readings can be taken is a great advantage. The method has been used with considerable success at hydro-electric power stations in Switzerland, Norway, and the Berlin Technische Hochschule. A carefully formed channel is required so that a diaphragm can be used with only small clearance between the sides and bottom of the channel; the channel should

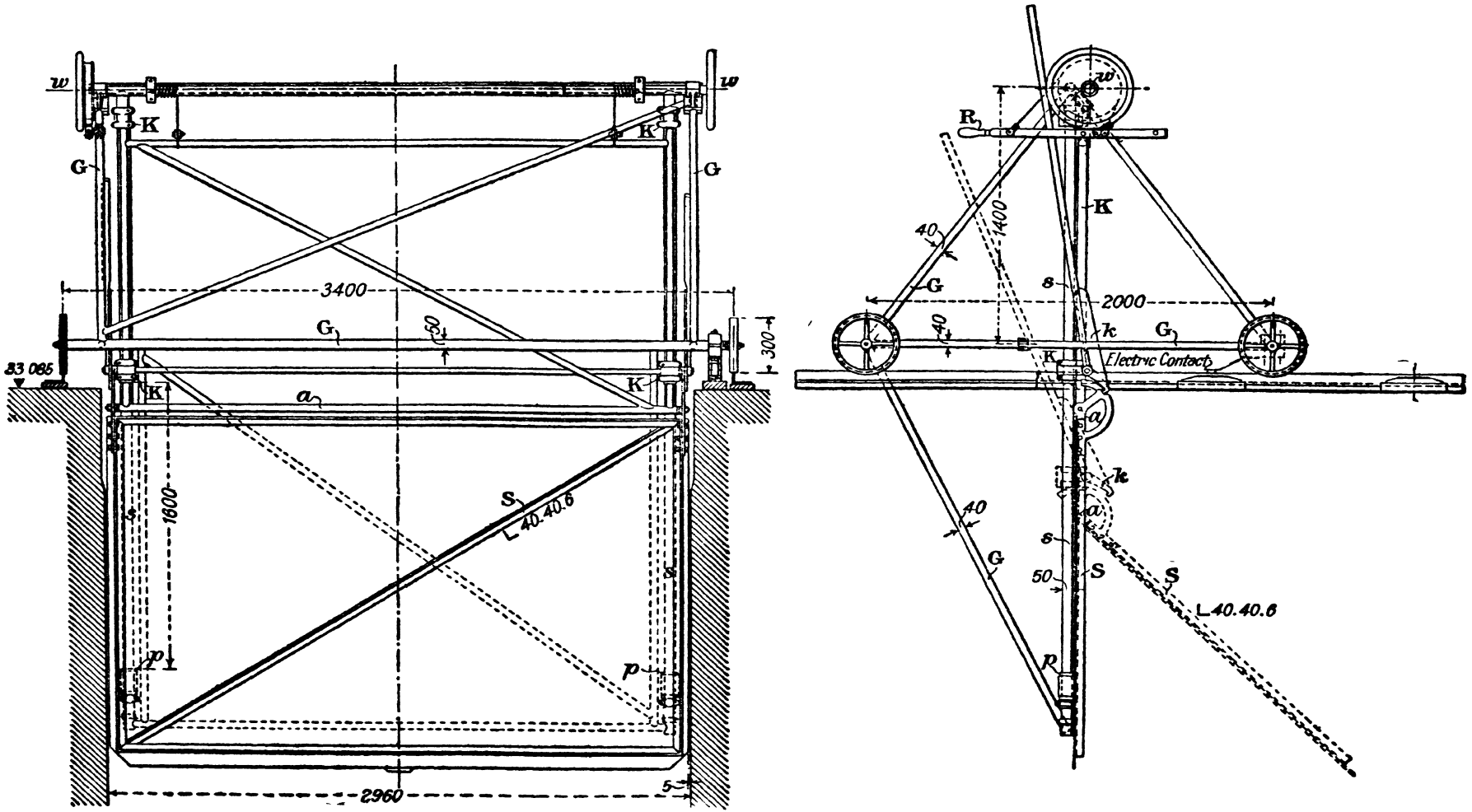
w
K
G
3400
50
300
33 085
a
1600
S
L 40.40.6
p
2960
5
R
1400
40
s
2000
k
Electric Contact

Fig. 372.

be as long as convenient, but not less than 30 feet in length, as the carriage has to travel a distance of about 10 feet before it takes up the velocity of the water in the channel. The carriage shown in the figure weighs only 88 lbs. and is made of thin steel tubing so as to get minimum weight with maximum rigidity. The diaphragm is of oiled canvas attached to a frame of light angles. The frame is suspended by the two small cables shown coiled round the horizontal shaft which can be rotated by the hand wheels N; the guides K slide along the tubes S; two rubber buffers P limit the descent and the hand brake R prevents the frame falling rapidly. The clutch *k* holds it rigidly in the vertical position; when *k* is released the diaphragm swings into the position shown in the figure.

To make a gauging the car is brought to the upstream end of the channel with the diaphragm raised and locked in the vertical position. At a given signal the diaphragm is dropped slowly, being controlled by the brake, until it rests on the buffers which are adjusted so that there is only a small clearance between the diaphragm and the bottom of the channel. The car begins to move when the diaphragm is partly immersed but after it has moved a distance of about 10 feet the motion is uniform. The time taken for the car to travel a distance of, say, 20 feet is now accurately determined by electric * or other means. The mean velocity of the stream is taken as being equal to the mean velocity of the car. The Swiss Bureau of Hydrography has carried out careful experiments at Ackersand and has checked the results given by the diaphragm with those obtained from a weir and by chemical * means. The gaugings agree within one per cent.

10. 1. The Centrifugal Pump.

The effect of varying the form of the chamber surrounding the wheel of a centrifugal pump has been discussed in the text and it is there stated, page 429, that the form of the casing is more important than the form of the wheel in determining the efficiency of the pump. Recent experiments, Bulletin Nos. 173 and 318, University of Wisconsin, carried out to determine the effect of the form of the wheel show that, as is to be expected, the form of the vane of the wheel has some effect, but as in these experiments the form of the casing was not suitable for converting the velocity head of the water leaving the wheel into pressure head, the highest efficiency recorded was only 39 per cent., while

* *Sonderabdruck aus der Zeitschrift des Vereines deutscher Ingenieure*, Jahrgang 1908, and *Bulletin of the University of Wisconsin*, No. 672. See p. 258.

the highest efficiency for the worst form of wheel was less than 31 per cent. Anything like a complete consideration of the effect of the whirlpool or free vortex chamber or of the spiral casing surrounding the wheel has not been attempted in the text, but experiment clearly shows that by their use the efficiency of the centrifugal pump is increased.

In Figs. 373 and 374 are shown particulars of a pump with a free vortex chamber C and a spiral chamber B surrounding the wheel. The characteristic equation for this pump is given later. Tests carried out at the Des Arts et Metier, Paris, gave an overall efficiency of 63 per cent. when discharging 104 litres per second against a head of 50 metres. The vanes are radial at exit. The normal number of revolutions per minute is 1500. The peripheral velocity of the wheel is 31·4 metres per second and the theoretical lift is thus

$$\frac{31{\cdot}4^2}{9{\cdot}81} = 100 \text{ metres, nearly,}$$

or the manometric efficiency is 50 per cent.

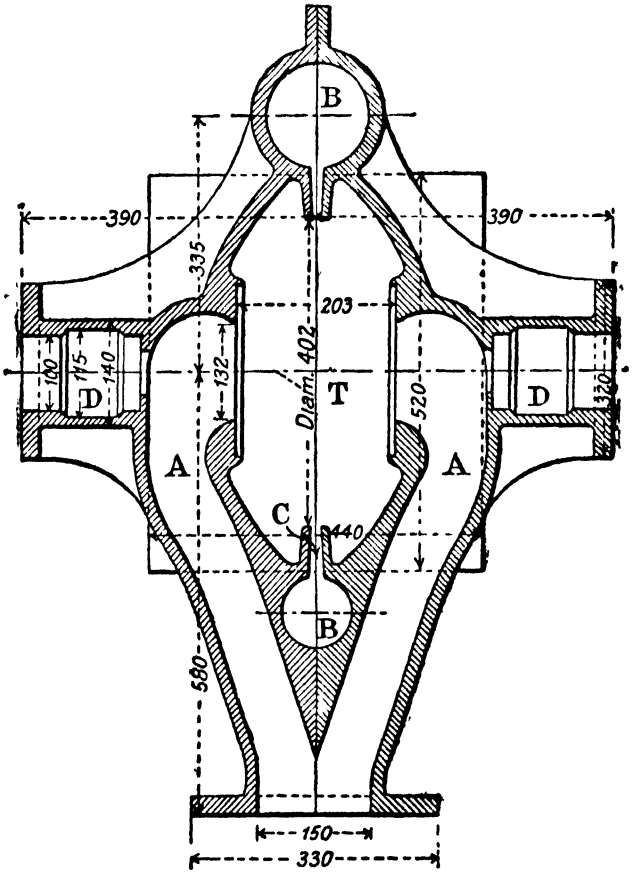

Fig. 373.

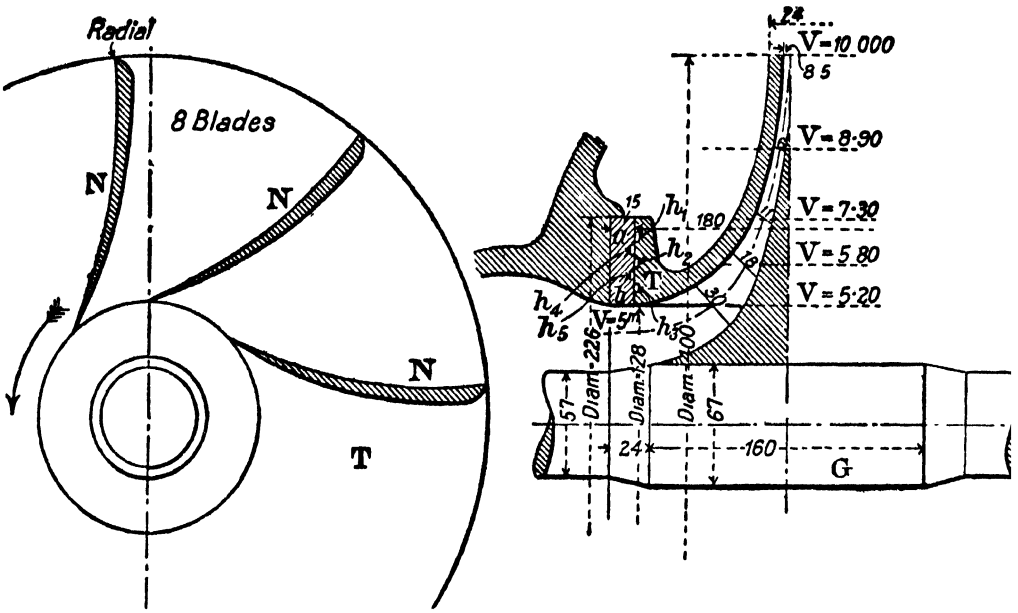

Fig. 374. Schabauer Centrifugal Pump Wheel with 8 blades, h_1, h_2, h_3, grooves to prevent leakage.

2. Characteristic equations for Centrifugal Pumps. Instability.

The characteristic equations for centrifugal pumps have been discussed in the text, and for the cases there considered they have been shown to be of the form

$$h = \frac{mv^2}{2g} + \frac{Cuv}{2g} + \frac{C_1u^2}{2g},$$

or since v is proportional to the number of revolutions per minute and u to the quantity of water delivered, the equations can be written in the form

$$h = AN^2 + BNQ + CQ^2.$$

An examination of the results of a number of published experiments shows that for many pumps, by giving proper values to the constants, such equations express the relationship between the variables fairly accurately for all discharges, but for high efficiency pumps, with a casing carefully designed to convert at a given discharge a large proportion of the velocity head into pressure head, a condition of instability arises and the head-discharge curves are not continuous. This will be better understood on reference to Figs. 375–376, which have been plotted from the results of the experiments on a Schwade pump *, the construction of which is shown in Fig. 377.

* *Zeitschrift für das Gesamte Turbinenwesen*, 1908.

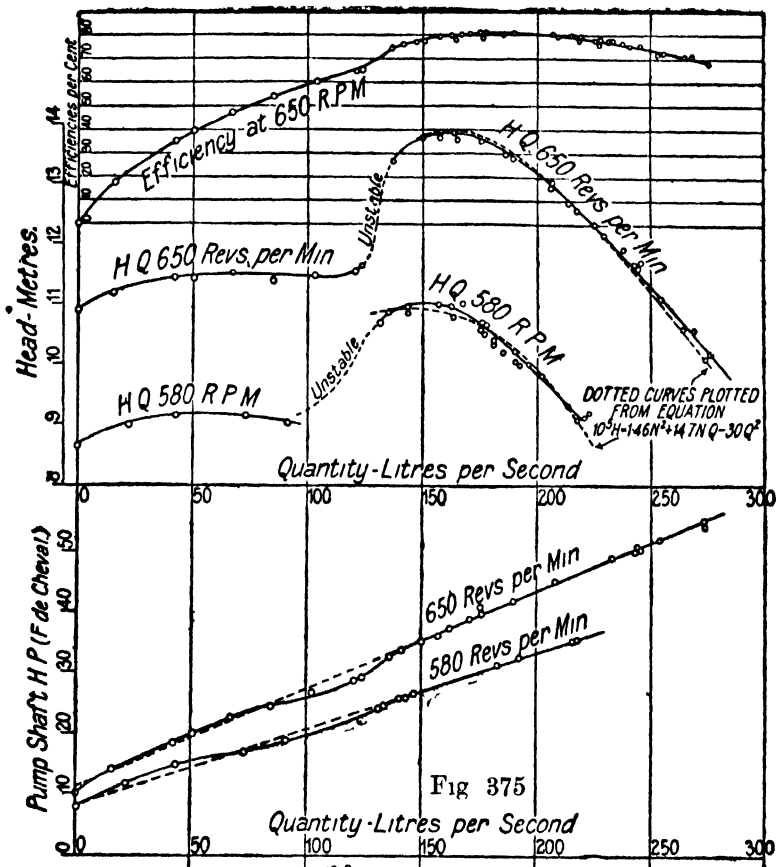

Fig 375

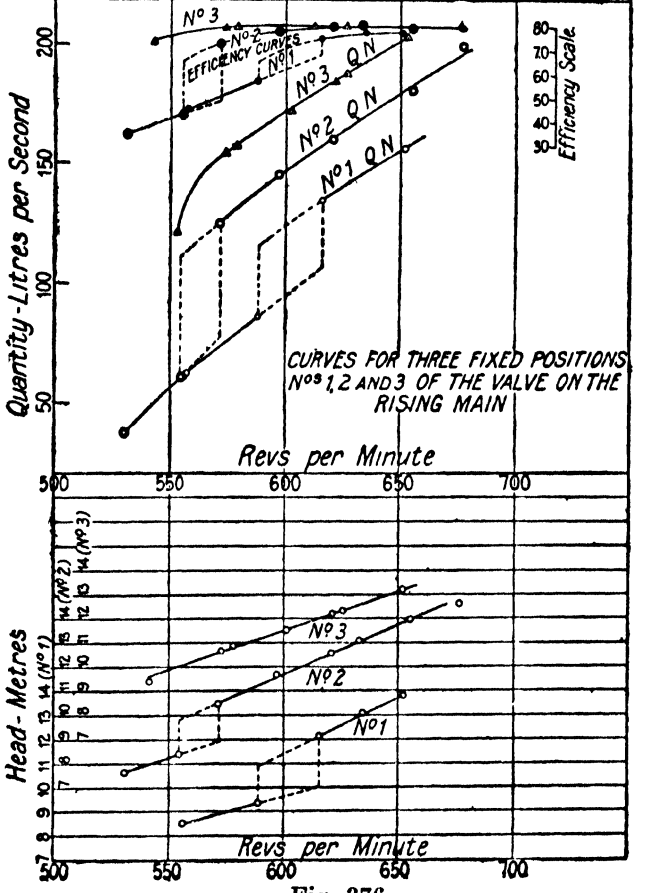

Fig. 376

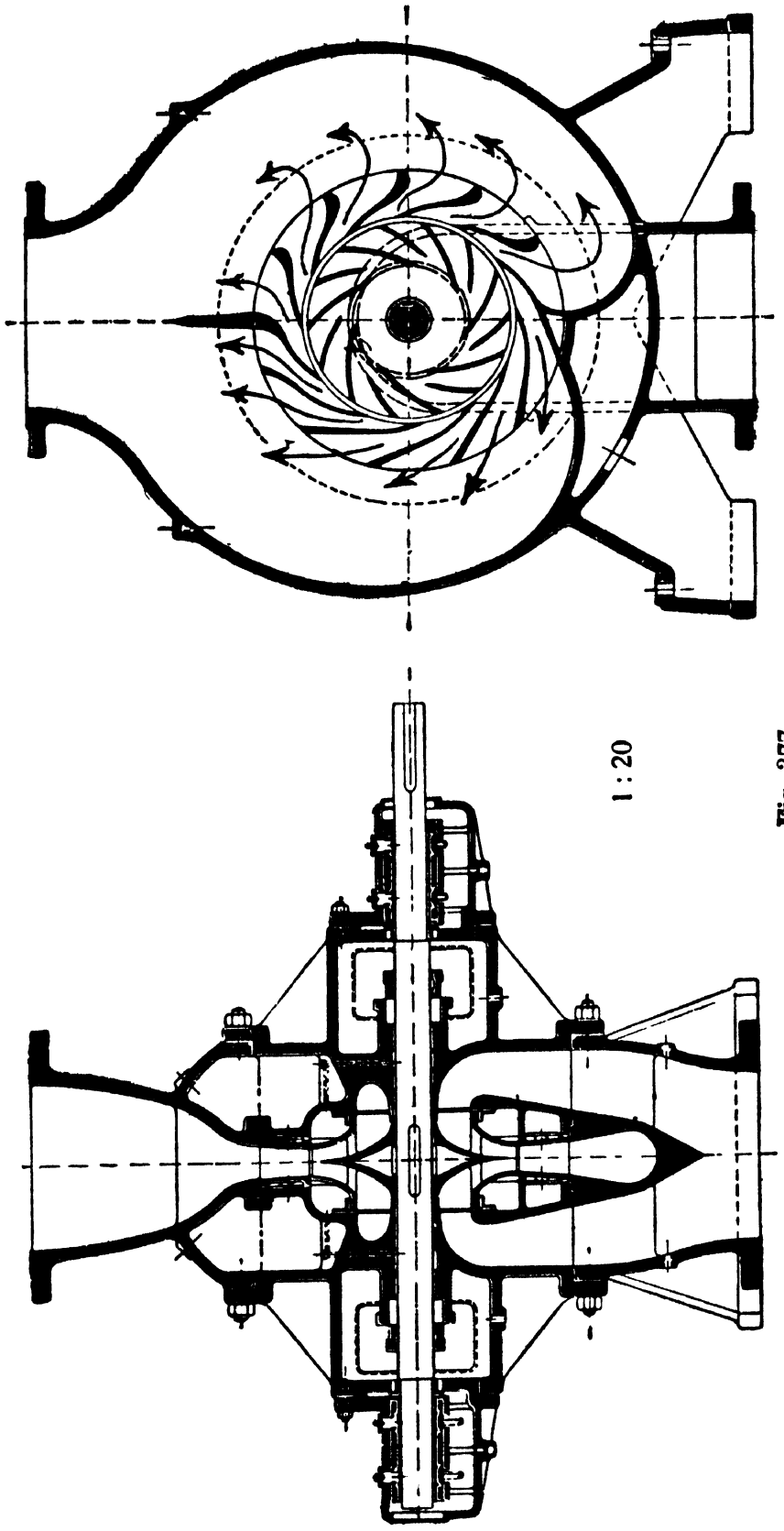

Fig. 377.

A "forced vortex" chamber with fixed guide vanes surrounds the wheel and surrounding this a spiral chamber. The diameter of the rotor is 420 mm. The water enters the wheel from both sides, so that the wheel is balanced as far as hydraulic pressures are concerned. The vanes of the wheel are set well back, the angle Q being about 150 degrees. The wheel has seven short and seven long vanes. The fixed vanes in the chamber surrounding the wheel are so formed that the direction of flow from each passage in this chamber is in the direction of the flow taking place in the spiral chamber toward the rising main. This is a very carefully designed pump and under the best conditions gave an efficiency of over 80 per cent. The performances of this pump at speeds varying from 531 to 656 revolutions per minute, the head varying from 7·657 to 13·86 metres and the discharge from 0 to 275 litres per second, have been determined with considerable precision. In Tables XL, XLI and XLII are shown the results obtained at various speeds, and in Figs. 375–6 are shown head-discharge curves for speeds of 580 and 650 revolutions per minute. In carrying out experiments on pumps it is not easy to run the pumps exactly at a given speed, and advantage has been taken of simple reduction formulae to correct the experimental values of the head and the discharge obtained at a speed near to 580 revolutions per minute or to 650 revolutions per minute respectively as follows. For small variations of speed* the head as measured by the gauges is assumed to be proportional to the speed squared and the quantity to the speed. Thus if H_0, see page 414, is the measured head at a speed of N revolutions per minute and Q is the discharge, then the reduced discharge at a speed N_1 nearly equal to N is

$$Q_1 = \frac{N_1}{N} \cdot Q$$

and the reduced head H_1 is

$$H_1 = \frac{N_1^2}{N^2} \cdot H_0 .$$

Before curves at constant speed are plotted it is desirable to make these reductions. Also if S is the nett work done on the shaft of the pump at N revolutions per minute the reduced nett work at N_1 revolutions is taken as

$$S_1 = \frac{N_1^3}{N^3} \cdot S.$$

* See page 388.

It will be seen on reference to the head-discharge curve at 650 revolutions per minute that when the discharge reaches 120 litres per second the head very suddenly rises, or in other words an unstable condition obtains. A similar sudden rise takes place also at 580 revolutions per minute. The curves of Fig. 376 also illustrate the condition of instability. The explanation would appear to be that as the velocity of flow through the pump approaches that for which the efficiency is a maximum a sudden diminution in the losses by shock takes place, which is accompanied by a rather sudden change in the efficiency, as shown in Fig. 375.

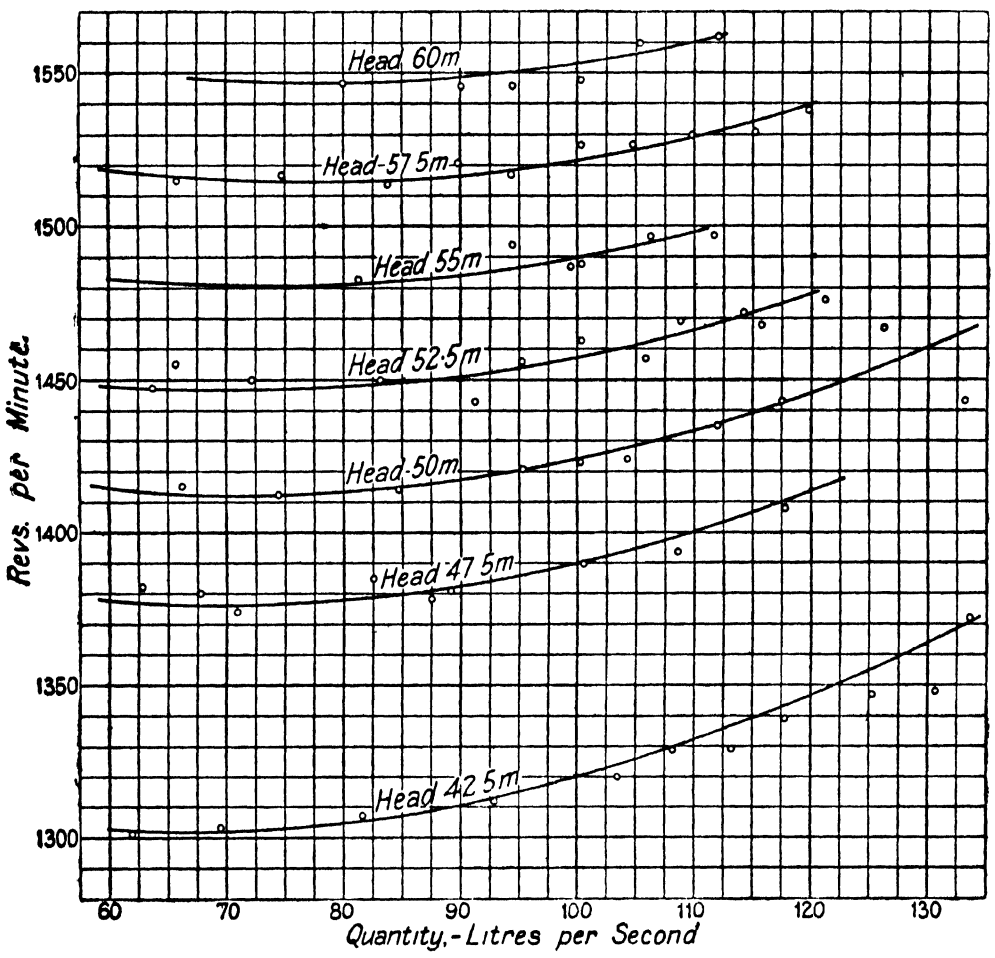

Fig. 378. Quantity-speed curves for constant head of French pump.

The parts of the head-discharge curves, from no discharge to the unstable portion, are fairly accurately represented by the equation

$$10^5 H = 2{\cdot}6N^2 + 3{\cdot}1NQ - 16{\cdot}5Q^2$$

or

$$H = \frac{1{\cdot}05v^2}{2g} + 0{\cdot}104vu - 0{\cdot}904u^2,$$

and the second part of the curves by

$$10^5H = 1{\cdot}46N^2 + 14{\cdot}7NQ - 30Q^2$$

or

$$H = \frac{0{\cdot}59v^2}{2g} + 0{\cdot}494vu - 1{\cdot}65u^2.$$

The agreement of the experimental values and the calculated values as obtained from these equations are seen in Tables XL–XLII.

The quantity-speed curves for the pump shown in Figs. 373–4 are shown in Fig. 378. The plotted points are experimental values while the curves have been plotted from the equation

$$10^5H = 2{\cdot}216N^2 + 11{\cdot}485NQ - 112{\cdot}9Q^2.$$

The curves agree with the experimental values equally as well as the latter appear to agree amongst themselves.

3. The power required to drive a pump.

The theoretical work done in raising Q units of volume through a height H is

$$E = w \,.\, Q \,.\, H.$$

If e is the hydraulic efficiency of the pump, the work done on the wheel is

$$\frac{w \,.\, Q \,.\, H}{e}.$$

On reference to the triangles of velocities given on page 399 it will be seen that when the angle of exit from the wheel is fixed the velocity u_1 is proportional to v_1 and since the head is proportional to v_1^2 the work done E is proportional to v_1^3 or

$$\propto N^3.$$

The power required to drive a perfect pump would, therefore, be proportional to N^3, and as stated above for small changes in N the power required to drive an actual pump may be assumed proportional to N^3.

The loss of head in the pump has been shown, p. 447, to depend on both the velocity of the wheel and the flow through the pump, and it might be expected therefore that the power required to drive the pump can be expressed by

$$S = DN^3 + Q\,(FNQ + GQ^2),$$ D, F and G being constants,

or by

$$S = D_1N^3 + N\,(F_1NQ + G_1Q^2).$$

The plotted points in Fig. 379 were obtained experimentally while the curves were plotted from the equation

$$10^9S = 0{\cdot}852N^3 + 23{\cdot}05N^2Q + 67{\cdot}7NQ^2.$$

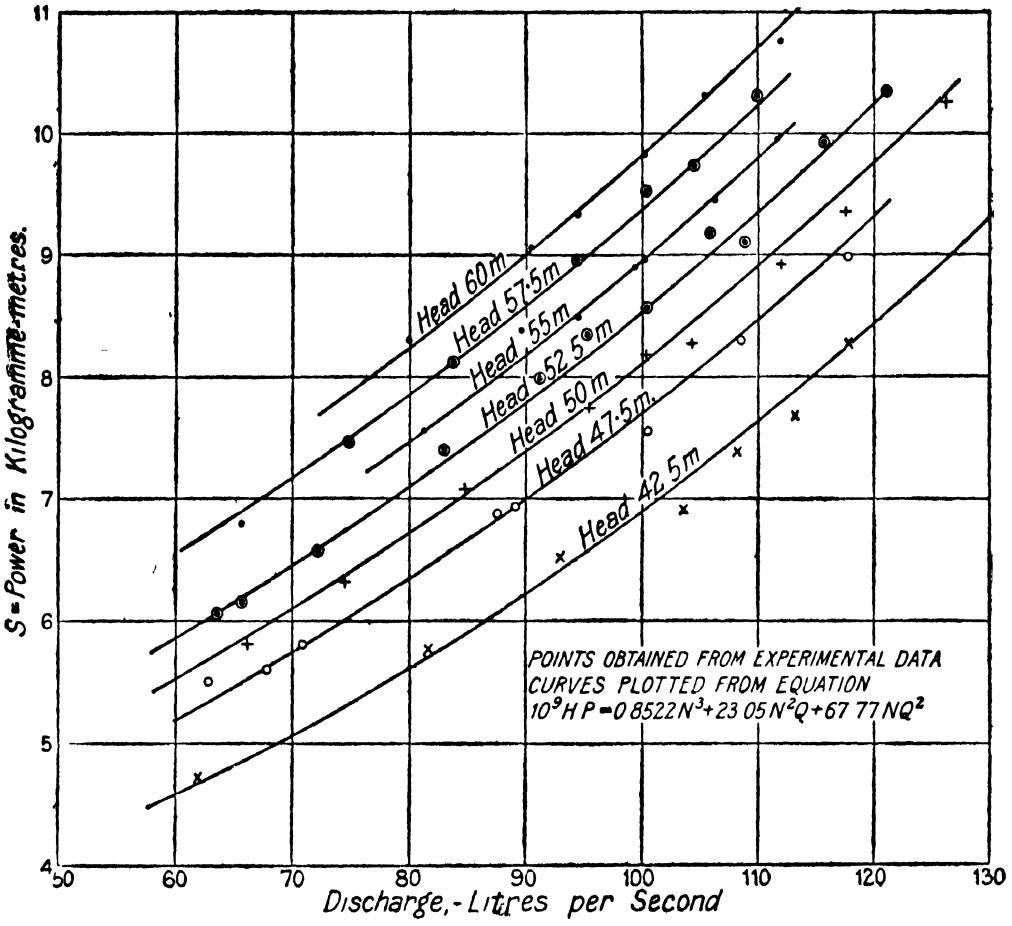

Fig. 379. Power Quantity Curves at various heads for Centrifugal Pump shown in Figs. 373, 374.
Normal Head 50 m.
Normal Discharge 100 L. per second.

The equation gives reasonable values, for the heads indicated in the figure, up to a discharge of 130 litres per second, the values of N corresponding to any value of Q being taken from the curves, Fig. 378. In Fig. 375 the shaft-horse power at 580 and 650 revolutions per minute respectively for various quantities of flow are shown. It will be seen that in each case the points lie very near to a straight line of which the equation is

$$10^5 S = N^2 (2{\cdot}59 + 0{\cdot}38Q).$$

In Table XL are shown the horse-power as calculated by this formula and as measured by means of an Almsler transmission dynamometer. Closer results could, however, be probably obtained by taking two expressions, corresponding to the parts below and above the critical condition respectively, of the more rational form given above.

TABLE XL.

H calculated from $10^5H = 1{\cdot}46N^2 + 14{\cdot}7NQ - 30Q^2$.
S " " $10^5S = N^2(2{\cdot}59 + 0{\cdot}38Q)$.

Revs. per min. N	Discharge Q litres per sec.	Head metres Measured H_p	Head metres Calculated H	Shaft horse-power	
				Measured S_0	Calculated S
652	158	13·799	13·80	36·75	36 40
635	148·5	13·03	13·14	32·40	33·3
616·3	137·0	12·114	12·27	28·95	28·6
588·3	88·3	9·327	10·36*	18·69	20·53
558·0	64·2	8·44*	8·59*	15 37	15·69
655·7	183·0	13·904	13·89	42·3	41·2
633 7	169·6	13·02	13·06	35·6	36 2
621·3	162·2	12·55	12·56	33·35	33·7
597·7	147·5	11·62	11·63	28·75	29·3
572·0	126 5	10·43	10·59	23·45	24·1
555·9	62·8	8·35*	8·46*	15 58	15·4
531·3	39·5	7·65*	7·16*	10·94	11·5
677·7	202·0	14·56	14·47	47·75	47·2
652 7	205·2	13·15	13·30	44·40	44·0
627·0	189·9	12 30	12·40	38·2	38·5
602·7	174·0	11·55	11 63	33·0	33·50
574·0	156·0	10·68	10 65	27·5	28·10
543·0	124 0	9·41	9·56	20·65	21·50
579·0	159·0	10 85	10 82	28·2	28·90
622·3	187·0	12 17	12·25	37·07	37·60

* These results are included although it is doubtful whether they would come on the part of the head-discharge curve given by the above equation.

TABLE XLI.

H calculated from $H = 2{\cdot}6N^2 + 3{\cdot}1NQ - 16{\cdot}5Q^2$

or $H = \dfrac{1{\cdot}05v^2}{2g} + 0{\cdot}104vu - 0{\cdot}904u^2$.

Revs. per min. N	Discharge Q litres per sec.	H Measured	H Calculated
650	0	11·01	11
650	67·5	11·469	11·51
650	104·5	11·41	11·3
580	0	8·65	8·75
582·5	22·1	9·06	9·17
582	72·9	9·18	9·26
583	91·3	9·14	9·14
588·3	88·3	9·32	9·32
593	0	9·07	9·17

TABLE XLII.

H calculated from $10^5H = 1{\cdot}46N^2 + 14{\cdot}7NQ - 30Q^2$.
Revolutions per min. N = 580.

Discharge Q litres per sec.	H Measured	H Calculated
161·7	10·87	10·85
217·9	9·05	9·25
183·4	10·40	10·45
203·6	9·78	9·85
168·0	10·96	10·75
143·4	10·93	10·94
133·9	10·92	10·92
215·9	9·10	9·30
215·1	9 32	9·35
221·5	9·13	9·05
188·8	10·16	10·26

Note:—The results given in the table have been chosen haphazard from a very large number of experimental values.

ANSWERS TO EXAMPLES.

Chapter I, page 19.

(1) 3900 lbs. 9360 lbs. (2) 784 lbs. (3) 200·6 tons.
(4) 176125 lbs. (5) 17·1 feet. (6) 19800 lbs.
(7) P=532459 lbs. X=13·12 ft. (8) ·91 foot. (9) ·089 in.
(10) 15·95 lbs. per sq. ft. (11) 5400 lbs.
(12) 89850 lbs. 81320 lbs.

Chapter II, page 35.

(1) 35,000 c. ft. (3) 2·98 ft.
(4) Depth of C. of B.=21·95 ft. BM=14·48 ft. (5) 19·1 ft. 6·9 ft.
(6) Less than 13·8 ft. from the bottom. (7) 1·57 ft. (8) 2·8 ins.

Chapter III, page 48.

(1) ·945. (2) 14·0 ft. per sec. 17·1 c. ft. per sec. (3) 25·01 ft.
(4) 115 ft. (5) 53·3 ft. per sec. (6) 63 c. ft. per sec.
(7) 44928 ft. lbs. 1·36 H.P. 8·84 ft. (8) 86·2 ft. 11·4 ft. per sec.
(9) 1048 gallons. (11) 8·836.

Chapter IV, page 78.

(1) 80·25. (2) 3906. (3) 37·636. (4) 5 ins. diam.
(5) 3·567 ins. (6) ·763. (7) 86 ft. per sec. 115 ft.
(8) ·806. (9) ·895. (10) ·058. (11) 144·3 ft. per sec.
(12) 2·94 ins. (13) ·60. (14) 572 gallons. (15) 22464 lbs.
(16) ·6206. (17) 14 c. ft. (18) ·755. (19) 102 c. ft.
(20) ·875 ft. 186 lbs. per sq. foot. 545 ft. lbs.
(21) 10·5 ins. 29·85 ins. (22) ·683 ft. (23) 4·52 minutes.
(24) 17·25 minutes. (25) 6·29 sq. ft. (26) 1·42 hours.

Chapter IV, page 110.

(1) 13,026 c. ft. (2) 4·15 ft.
(3) 69·9 c. ft. per sec. 129·8 c. ft. per sec. (4) 2·535.
(5) 4. (7) 43·3 c. ft. per sec. (8) 1·675 ft.
(9) 89·2 ft. (10) 2·22 ft. (11) 5·52 ft. (12) 23,500 c. ft.
(13) 24,250 c. ft. (14) 105 minutes. (15) 640 H.P.

Chapter V, page 170.

(1) 27·8 ft. ·0139. (2) 14·2 ft. (4) 65. (5) 3·78 ft.
(6) 10·75. 1·4 ft. ·33 ft. ·782 ft. ·0961 ft.
(8) ·61 c. ft. 28·54 ft. 25·8 ft. 9 ft. (9) 26 per cent.
(10) 1·97. 21 ft. 30 ft. 26 ft. 24 ft. 15 ft. (11) 3·64 c. ft.
(12) 3·08 c. ft. (13) ·574 ft. ·257 ft. 7·72 ft. (14) 2·1 ft.
(15) 1·86 c. ft. per sec. (16) F = ·0468 lbs. f = ·0053.
(17) 1·023. (18) ·704. (19) 2·9 ft. per sec.
(20) 4·4 c. ft. per sec. (21) If pipe is clean 46 ft.
(22) 28 ft. 736 ft. (23) Dirty cast-iron 6·1 feet per mile.
(24) 8·18 feet. (26) 1 foot.
(27) $\frac{F \cdot \pi D^5 a^3}{40}$, F = friction per unit area at unit velocity.
(28) 108 H.P. (29) 1430 lbs. 3 ins. (30) ·002825.
(31) k = ·004286. n = 1·84. (32) (a) 940 ft. (b) 2871 H.P. (33) ·0458.
(34) If d = 9″, v = 5 ft. per sec., and f = ·0056, h = 92 and H = 182.
(35) 1487×10^4. Yes. (36) 58·15 ft. (37) 54·5 hrs.
(38) 46,250 gallons. Increase 17 per cent. (39) 295·7 feet.
(40) 6 pipes. 480 lbs. per sq. inch.
(42) Velocities 6·18, 5·08, 8·15 ft. per sec. Quantity to B = 60 c. ft. per min. Quantity to C = 66·6 c. ft. per min. (45) ·468 c. ft. per sec.
(46) Using formula for old cast-iron pipes from page 138, v = 3·62 ft. per sec.
(47) 2·91 ft. (48) d = 3·8 ins. d_1 = 3·4 ins. d_2 = 2·9 ins. d_3 = 2·2 ins.
(49) Taking C as 120, first approximation to Q is 14·4 c. ft. per sec.
(51) d = 4·13 ins. v = 20·55 ft. per sec. p = 840 lbs. per sq. inch.
(53) 7·069 ft. 3·01 ft. C_r = 11·9. C_r for tubes = 5·06.
(54) Loss of head by friction = ·73 ft.
A head equal to $\frac{v^2}{2g}$ will probably be lost at each bend.
(56) 43·9 ft. ·936 in.
(57) h = 58′. Taking ·005 to be f in formula $h = \frac{4fv^2l}{2gd}$, v = 16·6 ft. per sec.
(58) v_1 = 8·8 ft. per sec. from A to P. v_2 = 4·95 ft. per sec. from B to P. v_3 = 13·75 ft. per sec. from P to C.

Chapter VI, page 229.

(1) 88·5. (2) 1·1 ft. diam.
(3) Value of m when discharge is a maximum is 1·357. ω = 17·62. C = 127, Q = 75 c. ft. per sec.
(4) ·0136. (5) 16,250 c. ft. per sec. (6) 3 ft.
(7) Bottom width 15 ft. nearly. (8) Bottom width 10 ft. nearly.
(9) 630 c. ft. per sec. (10) 96,000 c. ft. per sec.
(11) Depth 7·35 ft. (12) Depth 10·7 ft.
(13) Bottom width 75 ft. Slope ·00052. (17) C = 87·5.

Chapter VIII, page 280.

(1) 124·8 lbs. ·456 H.P. (2) 623 lbs.
(3) 104 lbs. 58·7 lbs. 294 ft. lbs. (4) 960 lbs.
(5) 261 lbs. 4·7 H.P. (6) 21·8. (7) 57 lbs.
(8) 12·4, 3·4 lbs. (9) Impressed velocity = 28·5 ft. per sec. Angle = 57°.
(10) 131 lbs. 18·6 lbs. (12) ·93. ·678. ·63. (13) 19·2.
(14) Vel. into tank = 34·8 ft. per sec. Wt. lifted = 10·3 tons or 8·65 tons. Increased resistance = 2330 lbs.
(15) 129 lbs. 8·3 ft. per sec.
(16) Work done, 575, 970, 1150, 1940 ft. lbs. Efficiencies $\frac{8}{27}$, ·50, $\frac{16}{27}$, 1.
(17) 1420 H.P. (18) ·9375. (19) 32 H.P.
(20) 3666 lbs. 161 H.P. 62 per cent.

Chapter IX, page 413.

(1) 105 H.P. (2) $\phi = 29°$. $V_r = 4·7$ ft. per sec.
(3) 10 per minute. 11° from the top of wheel. $\phi = 47°$.
(4) 1·17 c. ft. (5) 4·1 feet. (8) 29° 5′.
(9) 10·25 ft. per sec. 1·7 ft. 5·3 ft. per sec. 19° to radius.
(12) $v = 24·7$ ft. per sec. (13) $\phi = 47° 30'$. $a = 27° 20'$.
(14) 79° 15′. 19° 26′. ·53.
(15) 35·6 ft. per sec. 6° 24′. $23\frac{1}{4}$ ins. $11\frac{5}{8}$ ins. 12° 39′. $16\frac{3}{8}$ ins. $32\frac{3}{4}$ ins.
(16) 99 per cent. $\phi = 73°$, $a = 18°$. $\phi = 120°$, $a = 18°$.
(18) $\phi = 153° 23'$. H = 77·64 ft. H.P. = 141·16. Pressure head – 67·3 ft.
(19) $d = 1·22$ ft. D = 2·14 ft. Angles 12° 45′, 125° 22′, 16° 4′.
(20) $\phi = 134° 53'$, $\theta = 16° 25'$, $a = 9° 10'$. H.P. = 2760.
(21) 616. Heads by gauge, – 14, 35·6, 81. U = 51·5 ft. per sec.
(22) $\phi = 153° 53'$, $a = 25°$. H.P. = 29·3. Eff. = ·957.
(23) Blade angle 13° 30′. Vane angle 30° 25′. 3·92 ft. lbs. per lb.
(24) At 2′ 6″ radius, $\theta = 10°$, $\phi = 23° 45'$, $a = 16° 24'$. At 3′ 3″ radius, $\theta = 12° 11'$ $\phi = 78° 47'$, $a = 12° 45'$. At 4′ radius, $\theta = 15° 46'$, $\phi = 152° 11'$, $a = 10° 21$.
(25) 79° 30′. 21° 40′. 41° 30′.
(26) 53° 40′. 36°. 24°. 86·8 per cent. 87 per cent.
(27) 12° 45′. 62° 15′. 31° 45′.
(28) $v = 45·35$. U = 77. $V_r = 44$. $v_r = 36$. $U_1 = 23$. $e = 73·75$ per cent.
(29) ·36 ft. 40° to radius. (30) About 22 ft.
(31) H.P. = 80·8. Eff. = 92·5 per cent.

Chapter X, page 466.

(1) 47·4 H.P. (2) 25°. 53·1 ft. per sec. 94 ft. 50 ft.
(3) 55 per cent. (4) 52·5 per cent.
(5) $\frac{V_1 v_1}{g} = 106$ ft. $\frac{U_1^2}{2g} = 51$ ft. $\frac{p_1}{w} = 55$ ft.
(6) 11° 36′. 105 ft. 47·4 ft.
(7) 60 per cent. 251 H.P. 197 revs. per min.
(8) 700 revs. per min. ·81 in. Radial velocity 14·2 ft. per sec.
(12) 15·6 ft. lbs. per lb. 3·05 ft. 14 ft. per sec.

(15) $v=23{\cdot}64$ ft. per sec. $V=11{\cdot}3$.
(16) $d=9\frac{1}{2}$ ins. $D=19$ ins. Revs. per min. 472 or higher.

Chapter XI, page 514.

(1) 15 H.P. 9·6 ins. diam. (2) 4·5 ft.
(3) Vels. 1·23 and 2·41 ft. per sec. Max. accel. 2·32 and 4·55 ft. per sec. per sec.
(4) 393 ft. lbs. Mean friction head = ·0268, therefore work due to friction is very small.
(5) 4·61 H.P. 11·91 c. ft. per min. (6) ·338.
(7) $p=\frac{4wnQQ_1}{gd^4}$. Acceleration is zero when $\theta=\frac{\pi}{4}(m+2)$, m being any integer.
(11) Separation in second case.
(13) 67·6 and 66·1 lbs. per sq. inch respectively. H.P. = 3·14.
(15) 7·93 ft. 25 3 ft. 59·93 ft. (16) 3·64. (17) ·6.
(18) Separation in the sloping pipe.

Chapter XII, page 539.

(1) 3150 lbs. (2) 3·38 H.P. hours. (5) 4·7 ins. and 9·7 ins.
(6) 3·338 tons. (7) 175 lbs. per sq. inch.
(8) 2·8 ft. per sec. (9) 2 04 minutes.

Chapter XIII, page 550.

(2) 30,890 lbs. 1425 H.P (2) 3500 H P.
(3) 4575 lbs. (4) 25,650 lbs.

INDEX.

[*All numbers refer to pages.*]