TEXT FLY ,CUT AND PAGES MISSING WITHIN THE BOOK ONLY

UNIVERSAL
LIBRARY

OU_154438

UNIVERSAL
LIBRARY

OUP—786—13-6-75—10,000.

OSMANIA UNIVERSITY LIBRARY

Call No. 621·384/D91R Accession No. 15691

Author Duncan, R. L

Title Radio telegraphy and telephony

This book should be returned on or before the date last marked below.

RADIO TELEGRAPHY AND TELEPHONY

A COMPLETE TEXTBOOK FOR STUDENTS OF WIRELESS COMMUNICATION

BY

RUDOLPH L. DUNCAN

Member, Institute of Radio Engineers; Member, American Institute of Electrical Engineers; Member, Radio Club of America; Member, Veteran Wireless Operators Association; Major, Sig-Res., United States Army

AND

CHARLES E. DREW

Member, Institute of Radio Engineers; Member, American Institute of Electrical Engineers; Member, Radio Club of America; Member, Veteran Wireless Operators Association; Formerly Instructor, United States Naval Wireless Telephone School

SECOND EDITION

REVISED AND ENLARGED

NEW YORK

JOHN WILEY & SONS, INC.

LONDON: CHAPMAN & HALL, LIMITED

1931

COPYRIGHT, 1929, 1931
BY RUDOLPH L. DUNCAN
AND
CHARLES E. DREW

All Rights Reserved
This book or any part thereof must not be reproduced in any form without the written permission of the publisher.

PRINTED IN U. S. A.

PRESS OF
BRAUNWORTH & CO., INC.
BOOK MANUFACTURERS
BROOKLYN, NEW YORK

PREFACE TO THE SECOND EDITION

SINCE the first edition of "Radio Telegraphy and Telephony" was published notable achievements have been made in the field of radio. The recent advances in radio are found not in new invention, but in the refinement and perfection which are observed readily in every branch and phase of the industry.

In aviation, the safety factors on the highways of the air have been enlarged by the development of highly efficient apparatus for two-way communication. In radio broadcast transmitter design, outstanding accomplishment has been made, especially in controlling transmitted frequency and increasing the quality of transmission. Commercial communication on high-frequencies is now an everyday reality; here again the persevering amateur stands in bold relief—he proved that short wave communication is practical indeed. Vacuum tubes for both transmitting and receiving have been perfected to a high state of efficiency. The use of screen-grid tubes for transmitters, as well as for receivers, represents a big step forward. Perfection of the variable mu tetrode and practical utilization of the pentode vacuum tube are of more than passing interest. Radio's greatest service to mankind lies in the protection it affords to life at sea. Material improvement has been made upon marine radio apparatus, especially direction-finder equipment.

Great care has been expended to include accounts of all important advances in the radio field, except in Television, since the appearance of the first edition of the book. Additions have been made to the chapters on Vacuum Tubes and Commercial Transmitters, and three new chapters on Receiving Apparatus, Aviation Radio and Radio Broadcasting have been added.

As in the first edition of the book, attention has been given to radio practice and principles involved in the operation of radio apparatus in general. Thanks are extended to Mr. I. R. Baker of the RCA–Victor Company, the Airways Division of the U. S. Department of Commerce, the Western Electric Company, and the Radiomarine Corporation of America for information and illustrations furnished for this second and enlarged edition.

THE AUTHORS.

September 1, 1931.

PREFACE TO THE FIRST EDITION

MANY years of practical experience devoted exclusively to research and especially to instructing students of radio communication have given the authors the incentive to prepare the text in this book, with the expectation that it may not only be of instructional value to non-technical students and readers generally, but that it may serve the radio field as a practical handbook.

Conscientious efforts have been made to treat the present-day aspects of the various co-related subjects of radiation, both theoretically and practically, with frequent analogies, to make the phases of it clearer to persons who may desire more light than they possess on the causes, effects and uses of radio phenomena.

From the earliest understanding of the principles of radio science to the present highly complex application of those principles, the student will observe a logical, unbroken sequence. In other words, the story of radio is a fascinating, progressive record, in which the essential forces recognized in the functioning of the earliest equipment remain to-day unchanged except as they have yielded to inventive genius and the introduction of refinements as found in the modern radio telegraphic and telephonic installations, that have immeasurably broadened the usefulness of this science in its service to mankind.

The authors are indebted to Mr. E. E. Bucher, the Institute of Radio Engineers, American Radio Relay League, Radio Corporation of America, General Electric Company, Westinghouse Electric Company, The Electric Storage Battery Company, Crocker–Wheeler Electric Manufacturing Company, Edison Storage Battery Company, and others for valuable assistance in the form of information, literature, illustrations and diagrams.

THE AUTHORS.

CONTENTS

CHAPTER I

INTRODUCTION TO RADIO

PAGES

Classification of radio stations 1–4

CHAPTER II

MAGNETISM—THE ELECTRON THEORY

The magnetic circuit—Flux—Law of magnetism—Space medium—Kinds of magnets—Electromagnetism . . 5–15

CHAPTER III

THE PRODUCTION OF ELECTROMOTIVE FORCE

The electrical circuit—Electricity by friction, by chemical action—Polarization of cells and reduction thereof—Dry cells—Units of electricity—Electrical prefixes—Ohm's law—Practical problems in Ohm's law—Conductance of circuits . . 16–25

CHAPTER IV

ELECTROMAGNETIC INDUCTION

The magnetic field—Mutual induction—Self-induction—Lenz's law—The helix and solenoid—The transformer (elementary discussion) . 26–32

CHAPTER V

MOTOR-GENERATORS—STARTERS

The motor and the generator defined—Fundamental principles of the generator—The essentials of the generator—Determination of frequency—Strength of magnetic field—The a-c. generator—The d-c. generator—Function of the commutator—The electric motor—Counter electromotive force—Shunt-wound generator—Series-wound generator—Compound-wound generator—Motor with differential field winding—The dynamotor—The rotary converter—Field rheostats—Motor starters, hand and automatic—Protective condensers—Care of the motor-generator—Armatures—Right and left-hand rule—Eddy currents . . 33–73

CHAPTER VI

CURVE DIAGRAMS

The straight-line curve—The logarithmic curve—The sine curve 74–79

CHAPTER VII

STORAGE BATTERIES AND CHARGING CIRCUITS

Use and necessity for storage batteries in radio installations—Fundamental action in a storage battery—Types of lead acid cells and construction thereof—Capacity of cells—Specific gravity—Use of hydrometer—Charging—The charging panel—Care of lead acid storage batteries—The Edison storage battery and construction thereof—Care of Edison cells—Reaction of charge and discharge—Solution renewal—Specific gravity—Determining stage of charge—The tungar rectifier—Half-wave and full-wave tungar bulbs and charging principle 80–104

CHAPTER VIII

METERS

The galvanometer—The voltmeter—The ammeter—The wattmeter—The hot-wire ammeter—The frequency meter 105–110

CHAPTER IX

Alternating Current and Frequencies

PAGES

A review of alternating current principles—Direct current *versus* alternating current—Alternating current laws—Phase—Lag and lead—Cycle—Frequency—Time period—Resonance—Positive and negative with regard to a-c.—Five factors governing alternating current reaction—Voltage drop—Inductance and self-inductance—Resistance—Units of inductance—Ohm's law for alternating current—Sine wave—Maximum—Average—Effective value of alternating e.m.f. and current—Root means square—Use of vector diagram—Problems—Reactance and relation to watt power—Power factor—Practical demonstration of resistance and capacity in series—Formulas 111–166

CHAPTER X

Condensers—Electrostatic Capacity—Capacity Measurements

The condenser—Laws of charged bodies—Insulators and conductors—Condenser charge and discharge analyzed—Factor of time—Capacity—Unit of capacity—Capacity formulas—Condensers in parallel and problems—Condensers in series and problems 167–191

CHAPTER XI

Vacuum Tubes

Introduction — In general — Oscillator — Power-amplifier — Modulator — Speech amplifier—Audio oscillator—Detector—Radio-frequency amplifier—Audio-frequency amplifier—The atom—The electron—Ionization—Conduction current—Displacement current—Emission current—Space current—Two-electrode vacuum tube—Three-electrode vacuum tube—Four-electrode vacuum tube—Experiments in vacuum tube characteristics—The filament plate and grid circuits of the vacuum tube—Cathode-heater type vacuum tube—Gas effects—Space charge—Plotting characteristic curves—Plate rectification—Power detection—Grid leak and grid condenser—Why audio-frequency current is produced in detector plate circuit—Purpose of employing power tubes—Types of transmitting vacuum tubes—Examples in measuring vacuum tube characteristics 192–291

CHAPTER XII

Receiving Circuits

Propagation of radio waves and their relation to a receiving antenna—Antenna tuning elements and their adjustment—The variometer—Summary of generation and reception of a radio signal—The crystal detector—Mutual inductance and its relation to coupling—Vacuum tube receiving circuits—Regenerative [redacted]uned radio-frequency, and super-heterodyne receivers—Recepti[redacted]f continuous waves—Beat receiver—Action of the oscillator—The second harmonic oscillator intermediate frequency—Regenerative amplification—Resistance coupling—Impedance coupling—Transformer coupling—Radio-frequency transformer—Intermediate-frequency transformer—Audio-frequency transformer—Iron-core transformer—Saturation point—Single dial control—Step-by-step procedure of neutralizing radio-frequency amplifier tubes—Procedure for lining up main tuning condenser—Broad and sharp tuning—Straight-line frequency tuning—Wave trap—Possible troubles and corrective measures—Checking values of resistance units. 292–41[redacted]

CHAPTER XIII

PAGES

ALTERNATING CURRENT RECEIVERS—RECEIVING AND RECTIFYING TUBES

A-C. operated superheterodyne receiver—Midget receivers—Filament type a-c. tubes—Full-wave and half-wave rectifier tubes—Filter system—Cathode-heater type a-c. tubes—Screen grid four-electrode tubes—Pentode tube—Variable-mu tetrode or super-control screen grid tube. 418–436

CHAPTER XIV

TELEPHONE RECEIVERS—LOUDSPEAKER REPRODUCING UNITS

Simple bi-polar telephone receiver—Balanced armature [illegible] Cone type loudspeaker—Loudspeaker filter circuit—Exponential [illegible]—Electro-dynamic loudspeaker—Phonograph (magnetic) pick-up 437–456

CHAPTER XV

COMMERCIAL RECEIVERS

Type I.P.-501 receiver—Long wave loading unit—Practical operation—Type I.P.-501-A receiver—Type 106-D receiver—Practical operation—Reception of c.w., i.c.w. and modulated c.w. 457–484

CHAPTER XVI

RECTIFIER DEVICES—RECTIFIER CIRCUITS—VOLTAGE DIVIDER RESISTORS—FILTER CIRCUITS

Hot-cathode rectifier—Gaseous type rectifier—Electrolytic rectifier—Principle of ionization—Tungar type rectifier—Dry metal contact rectifiers—Voltage regulator (glow tube)—Action of condenser and choke coil in a filter circuit 485–508

CHAPTER XVII

CONDENSERS AND THEIR PRACTICAL APPLICATION—HOW A CIRCUIT OSCILLATES

The Leyden Jar—Compressed air condensers—Oil type condensers—Mica condensers—Paper dielectric condensers—Losses due to charging and discharging—Practical application of condensers in circuits—Inductance and capacity—Use of the oscillograph for visualizing transient phenomenon—How an electrical circuit oscillates..... 509–537

CHAPTER XVIII

ANTENNAS OR AERIALS

Directional characteristics of antennas—Measurement in terms of either frequency or wavelength in meters—Wavelength formula—Fundamental (natural) wavelength measurement of antenna inductance and capacity by substitution method—Vertical (fan or harp) antenna—Umbrella type antenna—Inverted "L" antenna—"T" type antenna—The cage antenna—Antenna insulation test—Detailed description of ship antenna—Insulators—Ground systems—Counterpoise (condenser antenna)—Multiple tuned antenna—Hertz antenna—Marconi antenna—Radiation—Dissipation of energy in an active antenna—Harmonics
IND —Nodes and antinodes—Transmission range—Sky wave and ground wave—The Heaviside layer theory—Beam transmission 538–566

CHAPTER XIX

Resonance

PAGES

Visualizing the principles of resonance—Use of the wavemeter—High-frequency buzzer excitation circuit—Wavemeter indicating devices—Percentage of coupling—Plotting a resonance curve—Logarithmic decrement—Use of the Kolster decremeter 567–601

CHAPTER XX

Commercial Broadcast and Telegraph Transmitters

General classes of [illegible]ters—The oscillator—The modulator—Modulation—plate rea[illegible]he microphone transmitter—The oscilloscope—Quartz crystal control—Master oscillator control—How modulation of high-frequency currents is accomplished—Constant current Heising system—Suggestive method for reading complex schematic diagrams—Popular description of a complete broadcast system—The Hartley oscillator—The Colpitts oscillator—Tuned-plate tuned-grid oscillator—Neutralizing inter-electrode tube capacity—The Wheatstone bridge—Coupling oscillating circuits—Parallel arrangement of oscillator and modulator tubes—Modulated oscillator 602–663

CHAPTER XXI

Commercial Tube Transmitters

The converted P–8, type ET–3628 (500-watt) transmitter—ET–3626 (750-watt) c.w. and i.c.w. transmitter—ET–3626–A transmitter—ET–3626–B transmitter—ET–3627 (200-watt) c.w. and i.c.w. transmitter—ET–3627–A transmitter—Break-in relays—ET–3638 (2-kw.) transmitter—ET–3650 emergency transmitter 664–720

CHAPTER XXII

Short Wave Transmitters and Receivers

Short wave antennas—Principles of short wave transmission—Skip-distance effect—Magnetic coupling—Principles of short wave reception—Heaviside-Kennelly layer theory—Short wave crystal control—Amplifying harmonics of a crystal—Type ET-3656 (1-kw.) high-frequency transmitter—ET-3655 high-frequency transmitter—Radio telephone attachment—Short wave adapter 721–778

CHAPTER XXIII

Spark Transmitters

The P–8 spark transmitter—Generation of discontinuous, or damped, waves—An analysis of spark discharge—Open and closed core power transformers—Ratio of transformation of power—Reactance regulator—Antenna changeover switch—Relay key—Four principal circuits of the spark transmitter—Spark discharge—Quenched spark gaps—Synchronous and non-synchronous rotary gaps—Effects of coupling—The oscillation transformer—Definition of broad wave, sharp wave and pure wave 779–798

CHAPTER XXIV

The Arc Transmitter

The 2-kw. Federal arc transmitter—Back shunt and compensation method of signaling—The d-c. motor-generator—Protective devices—The 41

PAGES

motor starter—Arc controlling resistors—The principles of the arc converter—Water cooling system—Antenna loading inductor—Relay key—The d-c. motor-driven chopper—Auxiliary hand key—Send-ground-receive switch—Placing arc transmitter in operation 799–816

CHAPTER XXV

DIRECTION FINDERS—RADIO COMPASS

Direction finder loop—Automatic compensator—Indicator compass card—The receiver-amplifier circuit—Direction (bi-lateral bearing)—Sense of direction (uni-lateral bearing)—Beacon stations—Compass stations—Plotting in graphic form the induced current in a loop (the figure of eight diagram)—Bellini-Tosi goniometer—Step-by-step procedure for operating a marine direction finder and obtaining a bearing..... 817–854

CHAPTER XXVI

RADIO AVIATION

Airway—Radio range—Radio range station—Radio range beacon system—Visual beacon indicator—Flying a course—Pointer-type course indicator—Reed converter—Bending or shifting radio beacon beams—Radio range transmitter—Airport telephone and telegraph transmitter—Ignition shielding and bonding—Aircraft antennas—Receivers used in aviation—Equipment for two-way communication—Transmitters used in aviation 855–907

CHAPTER XXVII

RADIO BROADCAST TRANSMITTER EQUIPMENT

Type 1-B 1-kw. transmitter—Vacuum tubes employed—type of circuit—Frequency control—Protective devices—Antenna coupling—Modulation—Component units—Crystal control—Ambient temperature compensation—Antenna transmission line—General operating instructions—Station maintenance—Type 50-B 50-kw. transmitter—Vacuum tubes employed—Frequency control—Protective devices—Mercury-vapor rectifiers—Component units—5- and 50-kw. amplifiers—Monitoring apparatus—Operator's control unit—Speech input equipment—Condenser microphone—Announcer's control unit—General operating instructions—Linear power amplifier—Neutralizing—Percentage of modulation—Decibel-transmission unit..... 908–1015

APPENDIX

Characteristics of receiving vacuum tubes—Characteristics of transmitting vacuum tubes—Trigonometric functions—Table of dimensions, lengths and resistance of cotton enameled magnet wire, and of silk covered magnet wire—Dielectric constant of various gases, liquids and solids—Fusing effect of current on copper wire—Characteristic signals transmitted by beacon stations—Voltage required to produce a spark in air gaps of various lengths—Relation of natural wavelength, frequency and inductance-capacity product in condenser circuits—Frequency *versus* wavelength—Complete ship-board installation..... 1016–1038

INDEX 1039–1046

PRACTICAL RADIO TELEGRAPHY AND TELEPHONY

CHAPTER I

INTRODUCTORY

THE transmission of intelligible signals through space, without the aid of wires or other conducting medium, is accomplished by setting up an electrical disturbance in space known as wireless, or radio telegraphy or telephony. The term "wireless" is derived from the fact that communication may be effected between two points without the aid of wires connecting the points; the term "radio" is derived from the fact that the electrical energy released into space is radiated in all directions. Wireless and radio, therefore, mean one and the same thing.

If a stone is thrown into a body of water, with a surface that is smooth, or in a state of rest, waves or ripples will form and gradually spread in all directions. In setting up an electrical disturbance in the space surrounding the antenna electrical waves are formed, and spread in all directions as in the case of waves on the surface of the water. There is, however, a great difference in the time required to cover a given distance in the case of the waves on the water and the waves of electrical disturbance in space. When a stone is thrown into the water, several minutes will elapse while the waves form, spread out, and reach the shore of the pond, or pool, or before they gradually die out in the distance. Waves made by an electrical disturbance travel at such a tremendous speed that their presence may be detected at great distances at practically the same instant the disturbance is set up. In fact, it may be said that their action is simultaneous. It is definitely known that electrical waves travel at the speed of light, which is 186,000 miles a second, approximately. (3×10^8 m/sec)

This means, in effect, that if a radio signal is sent from a point in the United States, it will be heard practically simultaneously at a point in Europe, if the transmitter has sufficient power to send a signal that

far. For example, the exact time required for a signal to go entirely around the world, approximately 25,000 miles, can be figured out very readily as follows: Radio waves travel at the rate of 186,000 miles per second. Distance around the earth, 25,000 miles. Divide 25,000 by 186,000, and the result is approximately one-seventh of a second.

It is therefore apparent that so far as the question of time is concerned, radio waves, carrying intelligible signals, can be considered simultaneous in their action and effect over any distance with which the people of this earth are concerned.

In order to communicate successfully between two points without the aid of wires, it is necessary to set up a disturbance in the intervening space between the transmitter antenna and the receiving station antenna by means of suitable apparatus.

When electrical energy, in the form of an electrical disturbance, is released into space for the purpose of effecting communication, it is necessary that this disturbance or energy be controlled in such a way as to make intelligible signals. In radio telegraphy this is accomplished by means of transmitting energy in various combinations of short and long impulses, known as dots and dashes, or code. The code used on the land telegraph lines of the United States is known as American Morse Code; the code used for radio signaling is known as International (the Continental) Morse Code. International radio laws prescribe that the International (the Continental) Morse Code is to be used for radio telegraph work.

There are two separate and distinct parts to every radio station, regardless of class or power. It is possible to have a station equipped for transmitting only, or for receiving only. Commercial stations are equipped for both transmitting and receiving. Among the amateur radio operators of the United States, however, there are probably hundreds of stations equipped for receiving only, to each one equipped for both purposes. In the commercial field, both transmitting and receiving equipments are provided invariably in all classes of stations.

The transmitting end of radio is the more comprehensive and complicated of the two, and more knowledge of electrical and radio matters is required to operate a transmitter properly than is necessary in the case of receiving equipment. The transmitting apparatus is also more costly to install and operate than receiving equipment. As the transmission of intelligence in some form or other is the primary object for installing a radio transmitter, means must be provided for utilizing a source of primary power (such as current from a storage battery or house lighting current) and transforming it by means of the proper equipment into the kind of current necessary for radio work.

As energy flows in the antenna (or aerial wire) circuit it is radiated away from the antenna, and the effect of the signal so created spreads in all directions, somewhat as the waves on the surface of water, in the manner previously explained.

In order to detect radio signals it is necessary to employ a means of gathering in signals and transforming them into audible tones. This requires that the receiving station must be attuned to, or be in tune with, the transmitting station, on the same principle that if the note E of a piano is struck, it will set up vibrations in the E string of a nearby violin. This principle in radio is known as *resonance* and is a very important condition in all forms of radio communications, at both the transmitting and receiving ends.

The most important part of receiving equipment, however, is what is known as the detector, for without it nothing can be heard. Detectors are of two kinds. Some have a small piece of mineral in contact with the point of a fine wire as the sensitive element, but the most sensitive detector is known as a vacuum tube, which, in exterior appearance, is a miniature incandescent lamp, or electric light. But it contains two other elements in addition to the usual filament of an incandescent lamp, each of which serves a very particular and important purpose in the detection of radio signals.

Head telephones, of the type " Miss Central " uses, are connected to the detector, and by means of them the detected signal is made audible to the ear.

Electricity used for power, light and heat may also be used as the primary power for radio transmitting stations, although it is necessary in creating radio signals to change its form considerably from that of the ordinary house-lighting current, to which we are accustomed.

Electric current is electricity in motion in conductors. It is not definitely known just what electricity really is, except that it is an invisible force. The laws of electricity, however, are fairly well understood, and by means of them electric current can be controlled and made to do much useful work. Electricity can be generated at one point, conducted to another point and converted into power, heat, or light, by means of suitable equipment. Its field of usefulness is seemingly unlimited.

At Niagara Falls, for instance, there are several large water-power plants for generating electric current, which employ the water from the river above the cataract as a motive power. The water is led through long conduits or sluiceways to immense water-wheels, which, in turn, are connected to electrical generators. The current from these generators is distributed by wires to a large number of cities, towns, and villages, some of them hundreds of miles away from the point where

the current is generated. At these destinations it is converted into heat, light or energy, for electric railways, homes, street lighting, and for power purposes in factories of all kinds. Electricity is generated also at thousands of points in this country in steam plants, where boilers and engines take the place of the water-power of Niagara Falls and other high-power water-driven generating plants.

CHAPTER II

MAGNETISM—THE ELECTRON THEORY

THE MAGNETIC CIRCUIT—ELECTROMAGNETISM

Learning the Subject.—In order to acquire a sound knowledge of radio operation the student must thoroughly understand the fundamental principles of magnetism and electricity. This is a point to be always kept in mind. On many occasions students have been heard to exclaim: "I want to learn radio, not electricity." That is impossible, because radio phenomena are electrical phenomena.

If there is difficulty in mastering an electrical subject the difficulty is met at the beginning, or elementary stage. Because neither electricity or magnetism can be seen, their actions are supposed to be surrounded by mystery. Since, however, the effects of electricity and magnetism can be observed and their actions always follow definite rules, the student, by applying reasoning with study, can master the subject.

The Magnet.—The name magnet was given, supposedly by early mariners, to black-colored stones, known as oxide of iron, magnetite, Fe_3O_4, because they possessed the property of attracting iron. If was discovered that if a piece of this magnetic stone was freely suspended, it would assume a position pointing nearly due north and south, and it was given the name of lodestone (leading stone). It will be noted that, regardless of the position in which the lodestone is held when suspended, it will turn in a definite direction when free to move. It will be observed that one end of the lodestone points towards the north and the other end towards the south; one is a north-seeking pole and the other a south-seeking pole. For all practical purposes they are termed *North* and *South* poles, respectively.

Now if an ordinary commercial bar magnet is so suspended that it is free to turn it will be found to act exactly as does the lodestone; one of its poles will point north and the other south.

Magnetism.—If a small iron nail, an ordinary steel sewing-needle, a copper tack, a brass tack or screw, and a piece of paper are so placed that each may be subjected to the influence of one end of a lodestone or magnet, it will be found that the iron nail and needle are attracted to the magnet, whereas copper, brass and paper are in no manner

affected. The same result will be obtained if the opposite end or pole of the magnet is presented to the same particles. If, however, a magnet possessing considerable magnetic strength should be applied as in the foregoing experiment, it would be observed that the paper would be feebly attracted and the copper feebly repelled. This indicates that substances may be divided into three classes:

(1) Ferro-magnetic (strongly magnetic).
(2) Para-magnetic (feebly magnetic).
(3) Diamagnetic (substances feebly repelled).

The energy contained in a magnet, which enables the magnet to perform its function of attracting certain metals at a distance, travels through space, thereby linking the magnet to the metal it attracts. This can be shown by holding either pole of a magnet an inch or more (depending upon the strength of the magnet) from a small iron nail. The nail will "jump" toward and cling to the magnet.

If small iron filings are evenly sprinkled over a piece of moderately stiff paper and the paper placed on top of a bar magnet, it will be observed that the filings arrange themselves in certain defined lines around the magnet. This shows clearly that the energy possessed by a magnet does a certain amount of work, through a space medium, in arranging the filings and proving that the energy stored in a magnet acts on the space medium in such manner as to strain it. The space medium resents the strain and endeavors to reduce it, which, as will be shown later, can best be accomplished by rearranging the iron filings. Thus, the space medium is strained by the magnet and, in an effort to recover its normal state, moves or arranges the filings.

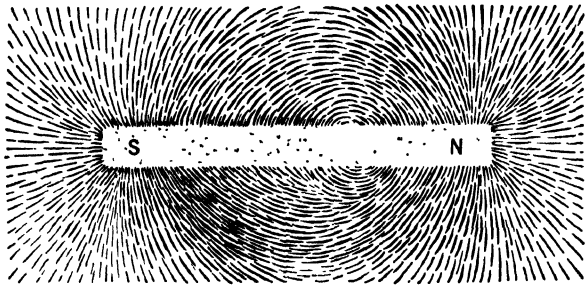

FIG. 1.—Lines of force and strain lines (magnetic spectrum) produced by a bar magnet as shown by the arrangement of iron filings.

The lines along which the filings are arranged are known as "lines of force."

The "magnetic field" is that region surrounding a magnet occupied by the lines of force.

If we take a paper on which iron filings have been sprinkled, as explained in the preceding paragraph, it will be noted by observing Fig. 1 that the entire region surround-

ing the magnet, as indicated by the iron filings, is in a state of strain, and that the largest number of strain lines (lines of force) branch out from the poles. It is noted that the lines of force take the form of curves. They start at one end from points at varying distances along the length of the magnet, and finish at points equally distant from the other end, leaving and entering at right angles to the magnet surface. Referring to Fig. 1, it is quite obvious that an appreciable portion of the lines of force reach out into regions considerable distance from the magnet. The lines of force leaving the north pole re-enter the magnet at the south pole, and are considered as having traveled through an infinite amount of space medium from the time they left the north pole until they re-enter the south pole. The lines of force which issue forth from a weak magnet supposedly extend as far distant as those from a strong magnet, but since, in the latter case, the lines of force are unable to get far away from each other, they are packed very closely together because they occupy the same space medium as the lesser number of lines of force which issue from the weaker magnet. A magnetic field of great density possesses great strength, and the strength of a magnet is dependent upon the closeness of the lines of force rather than the distance they extend.

The space medium through which the energy of a magnet acts will now be considered. Nothing definite is known of the actual nature of this medium, yet we have proof that a medium does exist. Air cannot be considered as the medium, because, as an illustration, the sun's heat rays travel millions of miles in reaching the earth, of which distance only a few hundred miles is air. In addition, we have proof of a medium other than air in our electric-light bulbs from which all air has been pumped, leaving the interior elements in a nearly complete vacuum.

Law of Magnetism.—If two magnets are freely suspended and the north pole of one is brought near to the north pole of the other, the former swings around in a direction which places its north pole as far away as possible from the approaching north pole of the latter. A similar effect is produced when two south poles are brought near to each other; but when the north pole of one suspended magnet is brought towards the south pole of another suspended magnet, the latter is found to swing so that it comes to rest in a position as near as possible to the approaching north pole.

From these facts we find the *First Law of Magnetism*:

Like poles repel each other.

Unlike poles attract each other.

Figs. 2*a* and 2*b* illustrate the principles of magnetic attraction and repulsion.

It was previously explained that the lines of force leaving a magnet at points distant from the center towards the north pole return to it in ever-widening curves. The lines which leave at the extreme end take a path of considerable length through which to re-enter the magnet at the other end. This is true because all the lines of force which leave the north pole are north pole lines of force, and, as like poles repel, each line endeavors to push the other, with the result that the inside lines (those nearest the magnet) force the outside lines outward and outward into space, compelling them to travel longer paths through which to re-enter the magnet. Each line of force endeavors to take the shortest path from pole to pole, because the energy of a magnet, acting through the space medium, does so by making the medium contract along lines parallel to the magnet poles. It may be stated that energy acting through the medium shrinks it along certain lines.

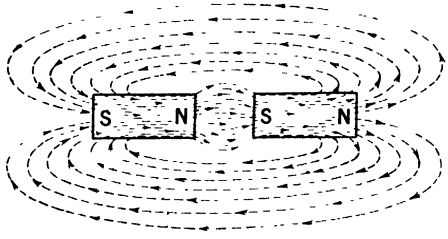

FIG. 2*a*.—Unlike magnetic poles attract.

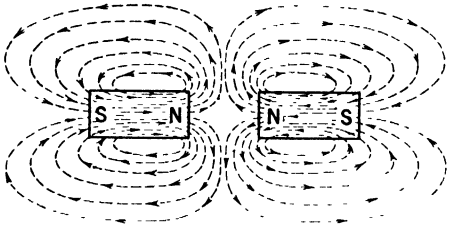

FIG. 2*b*.—Like magnetic poles repel.

If a common sewing needle is dipped into a pile of iron filings it will not attract the filings nor will it, when laid end to end with another needle, attract the other needle. But briskly rub one of the needles along its entire length several times with one of the poles of a bar magnet, and it will be found that the needle has become a miniature magnet with magnetic properties similar to the bar magnet with which it was rubbed. *Magnetism has been induced into the needle.*

In the foregoing example nothing material has been added to the needle; it has not been given anything which it did not possess. The changing of the needle's state, or the developing of an existing, but not evident, force is all that has been accomplished.

If a bar magnet is halved and re-halved until it has been subdivided into a great many pieces it will be found that each piece has a north and a south pole and is a complete magnet in every respect. This phenomenon may be understood by the student's realization that anything which possesses weight is matter and that theoretically a *molecule* is the smallest particle into which it is possible to divide matter. A molecule

of iron is composed of many atoms within which *electrons* are presumed to revolve. An iron bar is made up of molecules, each separated from the others.

The Electron Theory.—According to scientists, the earth countless ages ago was a collection of high-temperature gases revolving around the sun. As the outer surface cooled, solidification took place and many varied substances were formed. In the formation of atoms of different substances electrons were caught and imprisoned and presumably revolve within their atoms in the same manner as the earth revolves around the sun. A conception of the minuteness of an electron may be had when we realize that it is much smaller than an atom, that an atom is much smaller than a molecule, and that a molecule is not of sufficient size to be detected by a scientific microscope. The presence of electrons and the energy they contain have been made known.

In their continuous revolutions within the atoms the electrons produce strains in the space medium between the molecules to which the atoms belong.

If the student comprehends the existence of the electron he can readily picture magnetism as a concrete thing. Magnetism, as previously explained, is a strain, and the lines along which the strain exists are the lines of force. The molecules of iron composing an iron bar are tiny magnets possessing magnetic property by virtue of the straining of the medium surrounding them, which is caused by the continuous movement of the electrons within their atoms. Each molecule has a north pole and a south pole, a magnetic field, and in reality all the properties of a magnet, as shown in Figs. 3*a* and 3*b*. If the foregoing sentence is understood, it can readily be seen why any matter which has a north pole must have a south pole. We have proof that the electrons are in constant motion because of the detected strains and magnetic effects produced.

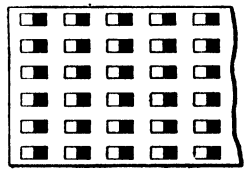

FIG. 3*a*.

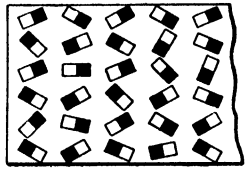

FIG. 3*b*.

Showing how molecules are supposed to arrange themselves inside of a magnetized and non-magnetized iron bar.

The lines of force of a magnet endeavor to shorten themselves as much as possible because of the straining of the space medium. The space medium tries to assume its natural state much the same as a stretched rubber band seeks to assume its normal condition. The pressure of the space medium arranges the molecules so as to cause them to produce a minimum strain by grouping them in a closed formation in an iron bar,

whereby they mutually attract one another, as shown in Fig. 3*b*, and the strains are therefore inside the bar entirely between molecule and molecule.

When a magnet is brought near to an iron bar a strain is set up in and around the bar, the molecule groupings inside of the bar are broken up, and the molecules themselves, each of which has a north and south pole, are swung round in such position that their north poles point in one direction and their south poles in the opposite direction, as shown in Fig. 3*a*. This causes the energy of each minute molecular magnet to be added to the one ahead of it, and finally for the reason just stated, one end of the bar becomes a north pole and the other end becomes a south pole, with the collective energy of all the minute molecular magnets acting between its two poles external to the bar. (The individual molecules illustrated in Figs. 3*a* and 3*b* are greatly exaggerated in size to convey the definite arrangement they assume when the bar is either magnetized or not magnetized.)

From the foregoing explanations it is not difficult to understand why iron filings map out the strains around them. Each filing has energy stored within it, but its molecules are so arranged that this energy is wholly confined to the interior of the filing, because of the position which the strain has forced each of the molecules to occupy. The iron filings sprinkled on a piece of paper, when subjected to magnetic influence, act similarly to the molecules within the iron bar, as previously explained; that is, the filings rearrange themselves in such manner that all their north pole molecules point in one direction and all their south pole molecules point in the opposite direction. Each filing, by magnetic induction, has become a magnet, and the energy which acted internally between the molecules of the filing before being magnetized is made to exert itself in such a manner that an external field is set up around each filing, together with north and south poles at the points where lines of force issue out of and re-enter it. There are as many lines of force in the space as there are lines in the magnetized bar when it is magnetically saturated.

Magnetic Saturation.—When a magnet induces magnetism in a non-magnetized object, the electrons of the inducing magnet perform work on the non-magnetized object by creating a strain, thus causing the rearrangement of the groups of molecules of the object. The extent of this rearrangement of the molecules is dependent upon the magnitude of the strain caused by the inducing magnet; that is, if the inducing magnet possesses a great amount of energy, the groups of molecules are more completely rearranged. The non-magnetized object is at its saturation point, or magnetically saturated, when the magnetizing

force applied to produce magnetization is sufficiently great to completely rearrange the molecules of the object.

It was previously shown that the strains (lines of force) surrounding a magnet so arranged the molecules of a non-magnetized object as to cause the object to become a magnet. The strain at any point in the field of a magnet is the magnetizing force at that point; it is a measure of the energy of the magnet and its ability to perform the work of magnetization upon a magnetic substance at a given distance from the magnet. The strain at any point near a magnet, or the magnetizing force, is shown by the density of the lines of force at that point, and is a measure of the available energy for accomplishing work at that point.

Classes of Magnets.—Magnets are divided into two classes: *temporary* and *permanent.* A bar of soft iron retains its magnetism only while under the influence of a given magnetizing force, and is, therefore, called a temporary magnet. A bar of steel which possesses a small amount of crystallized carbon and silicon also retains its magnetism only while under the influence of a magnetizing force and is classed as a temporary magnet. A hard steel bar, when once magnetized, retains its magnetism permanently, and thereafter is known as a permanent magnet. An iron bar possessing a large percentage of crystallized carbon and silicon may be classed as a permanent magnet, inasmuch as it will not quickly lose its magnetism after magnetization.

The Temporary Magnet.—If an ordinary iron nail is inserted into a heap of iron filings it will be noticed that the filings are not attracted to the nail, but if one pole of a magnet is applied to the head of the nail, it will be found that a certain number of the molecules within the nail are made to rearrange themselves by the strains of the approaching magnet; hence the nail has become a magnet and attracts some of the iron filings. With one pole of the approaching magnet still applied to the nail, lift the nail from the filings and notice that it is surrounded by the filings; draw the approaching magnet from the nail and the filings will drop away. This proves that the iron nail is a temporary magnet.

The Permanent Magnet.—If a magnetized steel needle is used in place of the iron nail, the opposite effect will be noticed; the iron filings will not drop away when the approaching magnet is drawn from the needle. The steel needle is a permanent magnet.

Residual Magnetism—Remanance—Retentivity—Coercivity—Coercive Force.—A certain amount of magnetism remains in all magnetized objects, even iron, after the magnetizing force has been withdrawn. This remaining magnetism is known as *residual magnetism,* and the total

number of lines of force of residual magnetism is called the *remanence.* The power of steel and iron to resist demagnetization, after having been once magnetized, is termed its *retentivity.* Steel possesses greater retentivity than iron because, as previously related, soft iron becomes saturated with magnetism very quickly and loses it almost immediately when the inducing magnetic field is removed. The ability of steel and some forms of iron to retain their state of magnetization is called *coercivity,* and the force necessary to apply to a magnet to demagnetize it is called the *coercive force.*

Permeability—Reluctivity.—The ability of any substance to conduct magnetic lines of force or the facility the substance offers to magnetization is termed its *permeability.* The opposition offered by any substance to magnetization is termed its *reluctivity.*

Magnetic Flux.—The total lines of force permeating a magnetic circuit comprise the *magnetic flux,* or simply flux.

Electromagnetism.—Electromagnetism is the magnetism produced around a conducting medium when a current flows through it.

If a piece of bare or insulated copper wire is connected to a source of current supply and dipped into a pile of iron filings, it will be seen that filings are attracted to all sides of the wire as though it were a magnet. The filings will cling to any part of the wire as long as the current is flowing, but when the current supply is disconnected, the filings will drop from the wire. Further proof that a wire carrying a current possesses a magnetic field, and is therefore an electromagnet, may be shown by laying a conductor, through which a current of electricity is passing, parallel to and above a compass needle. The compass needle will tend to turn at right angles to the conductor, and so remain as long as current is flowing through the conductor, but when the current is cut off the compass needle will return to its original and normal position.

Direction of Magnetic Lines of Force.—An electric current passing through a conductor produces magnetic lines of force beginning at the center of the wire. These lines form a continuous cylindrical whirl of circular lines along the entire length of the wire. If visible, they might appear as shown in Fig. 4*a*, and an end view as shown in Fig. 4*b*. These circular lines of force complete their circuits independently around the wire, that is, they do not cut or cross the paths of one another.

The lines of force produced by a current-carrying conductor have a definite direction, depending upon the direction in which the current is flowing. If the current in a conductor is flowing away from the reader, as shown in Fig. 5*a*, the direction of the lines of force will be around the conductor in the direction of the hands of a clock, or clock-

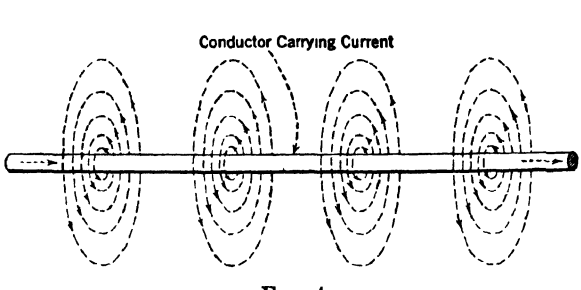

FIG. 4*a*.

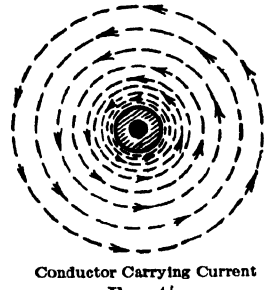

FIG. 4*b*.

FIG. 4*a*.—Showing the production of magnetic whirls or lines of force about a current carrying conductor

FIG. 4*b*.—Cross-sectional end view of a current carrying conductor showing the direction of the magnetic lines of force.

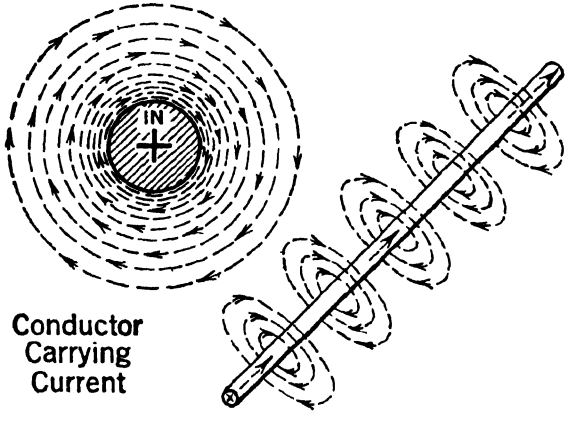

FIG. 5*a*.—Views showing the direction of lines of force about a conductor when the current is flowing away from the reader.

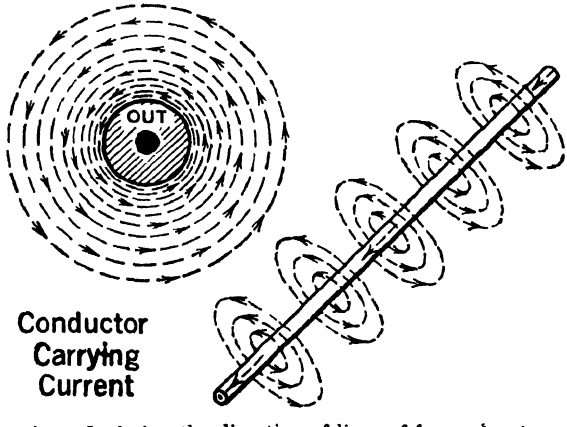

FIG. 5*b*.—Two views depicting the direction of lines of force about a conductor when the current is flowing toward the reader.

wise. If, however, the current flows toward the reader, as shown in Fig. 5B, the direction of the lines of force will be around the conductor

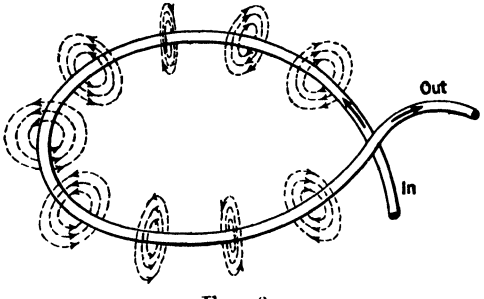

FIG. 6.

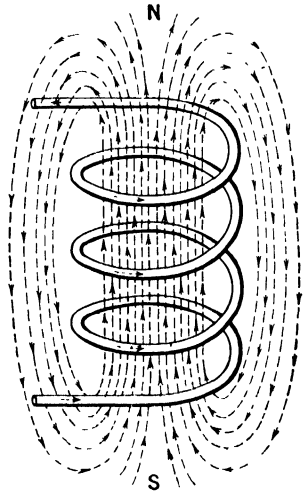

FIG. 7.

FIG. 6.—Magnetic whirls or lines of force set about a loop conductor through which current is flowing.

FIG. 7.—Showing the relation of the direction of current flow through the turns of a coil to the resultant direction of the magnetic field produced.

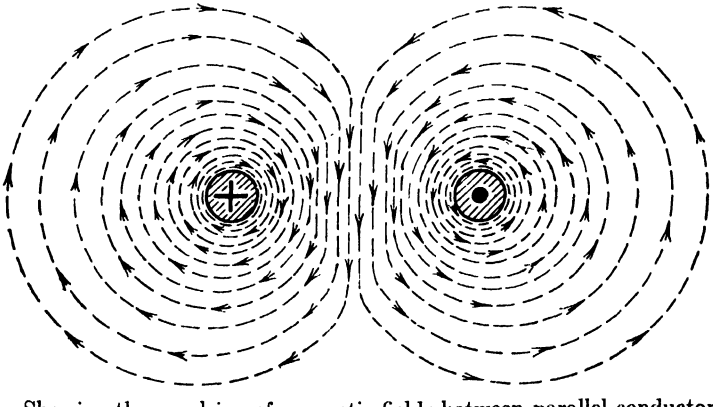

FIG. 8.—Showing the repulsion of magnetic fields between parallel conductors when the current in each is flowing in opposite directions.

in the opposite direction to the movement of the hands of a clock, or counter-clockwise.

If a conductor is formed in the shape of a loop, as shown in Fig. 6,

and current flows through it as indicated by the small arrows, it will be observed that the lines of force are acting in an upward direction on the inside of the wire, and in a downward direction on the outside. The magnetic field produced is the same as that produced by a magnet because, since the lines of force come out of the upper side of the circular wire and go in at the under side, the upper side becomes the north pole and the lower side becomes the south pole.

This action may be better understood by the variation of the effect of a coil of wire, as shown in Fig. 7. The lines of force, rather than acting wholly around each turn, combine with those produced by the next turn, and so on, giving the effect shown in the illustration.

Attraction and Repulsion of Magnetic Fields.—The magnetic fields of two parallel conductors are either mutually attractive or repellent according to the direction of the current in each. If the current in the left-hand wire, Fig. 8, is flowing away from the reader and in the right-hand wire towards the reader, the magnetic fields are opposite, and repel each other. If, on the other hand, the current in the two wires is flowing in the same direction, their lines of force have the same direction, with the result that they unite, as shown in Fig. 9, forming a continuous field around both conductors.

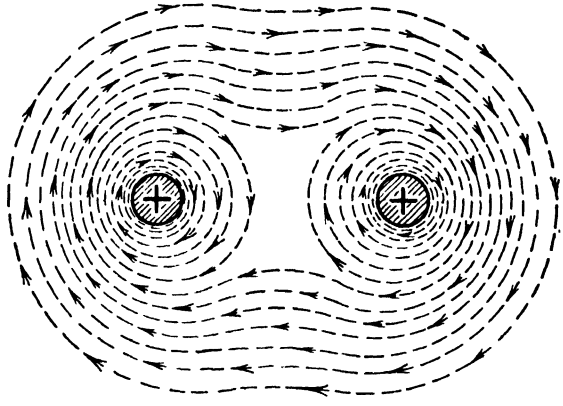

FIG. 9.—Showing the attraction of magnetic fields around two parallel conductors when current flows through each in the same direction.

CHAPTER III

THE PRODUCTION OF ELECTROMOTIVE FORCE—UNITS OF ELECTRICITY

OHM'S LAW FOR DIRECT CURRENT

Phenomena of Electricity.—When a current of electricity is spoken of as "flowing" through a wire or circuit, it is a convenient expression of the phenomena associated with the flow of electric current. Electricity cannot be seen and the exact nature of it is not known, nor is it known what actually transpires in the transfer of electricity from point to point in a conductor; yet the laws governing it are understood. There is nothing of fact to prove the existence of a "current," but this term has been universally adopted to designate the flow of electricity.

Producing Current Flow.—It may be stated for simplicity that electricity is dormant in all substances. However, it may be made to move in current-conducting bodies by exerting a difference of electrical pressure between two bodies, or between two parts of the same body. *This difference of pressure,* known as the *Electromotive Force,* may be better understood by comparing it with the flow of water. If a water-pipe, representing a conductor, is filled with water, and the ends of the pipe are held at the same height or level, no water will flow in either direction, because there is no difference of pressure acting at either end of the pipe.

If now one end of the pipe is raised above the other end, or if one end is blown into, a difference of pressure is exerted and water will flow. Or if a small container is attached to one end of the pipe, and the container elevated higher than the free end, water will flow because of the pressure. With this difference of pressure may be compared the difference of potential necessary to move electric current through a conductor. As the water represents electricity, the flow of water represents an electric current.

Production of E.M.F.—An electromotive force (abbreviated e.m.f.) can be produced by various methods, for example:

(1) By friction (static electricity).
(2) By chemical action (batteries).
(3) By mechanical motion (generators-dynamic).
(4) By thermal action (thermo-junction).

The first two methods will be considered in this chapter; the latter two in subsequent chapters.

Electricity by Friction.—When a piece of amber is rubbed with a piece of silk, the amber is said to be electrified. It has acquired the property of attracting light objects, such as small bits of paper, cork and wool. If these objects actually touch the amber which attracts them, they are repelled. These attractions and repulsions are caused by friction and are known as static electricity (electricity at rest or stationary); the actual action of attraction and repulsion is due to electric charges residing on these elements. The amber is said to possess *positive* (+) *electrification* and the silk *negative* (−) *electrification.*

Positive and Negative Charges.—Experiment will prove that neither the positive nor the negative charge is ever produced alone, for, when amber is rubbed with silk, although a positive charge is produced on the amber, an equal negative charge is produced at the same time on the silk. From the foregoing and other experiments, the following facts are brought out:

(1) That when either a positive or negative charge is produced an equal and opposite charge is also produced.
(2) That like charges repel and unlike charges attract.
(3) That when an electrified body touches an unelectrified body, the latter becomes charged to the same polarity as the former.
(4) That when an electrified body touches an oppositely charged electrified body, their electrification is destroyed if the two charges are equal; but, if the charge on one body is greater than that on the other, their electrification is only partially destroyed, and both bodies become charged to the same polarity as that of the greater charge.

There are substances other than amber and silk which, when rubbed together, will produce charges of electricity. There are also machines (static or frictional machines) for the production of electromotive force by friction, but since they bear no particular relation to the principles involved in radio telegraph and telephone apparatus, they will not be discussed.

Electricity by Chemical Action.—A convenient apparatus for producing an electromotive force is the electro-chemical cell, or Voltaic

cell, discovered in 1800 by Volta, an Italian physicist. In the following paragraph the chemical and electrical action of such a cell will be discussed.

If two dissimilar metals are immersed in a diluted acid solution and the exposed terminals of these two metals are joined by a wire, the cell is capable of supplying a continuous flow of electricity through the wire. The cell, such as shown in Fig. 10, consists of a zinc and copper plate immersed in a sulphuric acid solution (H_2SO_4), known as the exciting fluid. The chemical action within the cell, which is the production agency for the electromotive force, may be summarized as follows: When the copper and zinc strips are connected externally by a conductor and the current begins to flow, the sulphuric acid attacks the surface of the zinc plate, and a compound substance known as sulphate of zinc is formed. The zinc gradually wastes away when the current is flowing, its consumption supplying the energy required to drive the current through the cell and the conductor connecting the two metals.

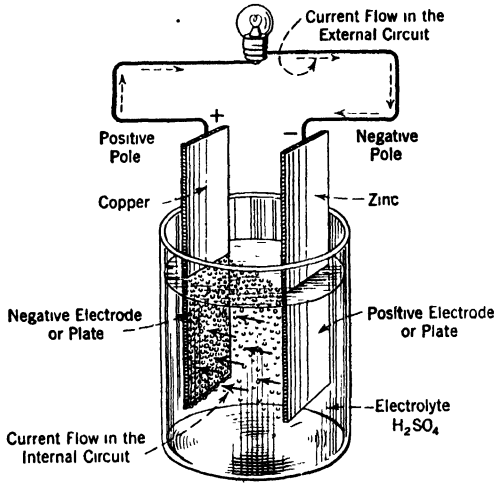

FIG. 10.—The voltaic cell.

During the formation of sulphate on the zinc element, some of the hydrogen contained in the sulphuric acid is liberated in the form of bubbles, a few of which immediately appear on the copper plate, while the others rise to the surface of the liquid and escape into the surrounding air. Since hydrogen is a non-conductor of electricity, the amount of surface of the copper plate in contact with the battery solution gradually decreases as the accumulation of hydrogen gas increases, resulting in lesser current output of the cell. It might be added that the hydrogen also tends to set up a current within the cell in a direction opposite to the normal flow, thus partly reducing the current output.

When a cell has been weakened by a quantity of hydrogen clinging to the copper, it is said to be *polarized.* The various means which have been practiced to reduce or prevent the polarization of cells may be classed as:

(1) *Mechanical Means.*—Partial elimination of the hydrogen bubbles by forcing air into the acid solution through a tube, or by keeping the solution in constant circulation by syphons.

(2) *Chemical Means.*—Partial elimination may be attained by placing chloride of lime, an oxidizing substance, in the solution. This substance tends to prevent the increase in the internal resistance (resistance offered by a cell to a current flowing through it from one plate to the other) and the opposing electromotive force within the cell.

(3) *Electro-chemical Means.*—Total elimination of polarization may be attained by using double cells to arrange conditions in such a way that some solid metal, preferably copper, is liberated, rather than hydrogen bubbles at the point where the current leaves the liquid.

If an instrument, such as an electroscope, is employed to detect the presence and nature of the electric charges within the simple cell just described, it will be found that a negative charge is indicated at the exposed end of the zinc plate. Therefore the zinc is the negative (−) pole of the cell, and the copper the positive (+) pole.

The difference of pressure which promotes the flow of current around the external circuit of the cell is caused by the action of the battery solution upon one plate more than upon the other. The direction of current inside the cell is from the zinc plate through the solution to the copper plate, and outside the cell from the copper plate through the wire conductor to the zinc plate.

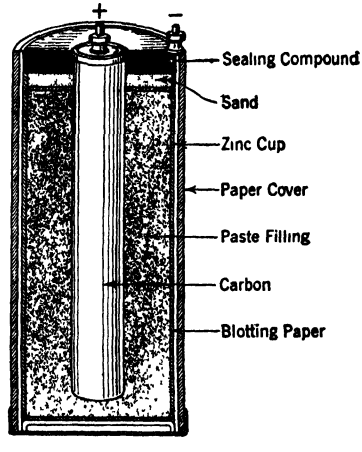

FIG. 11.—Cross-sectional view showing the construction of a dry cell.

Dissimilar metals, other than zinc and copper, may be immersed in an acid solution to produce an electromotive force. Carbon, gold, silver, iron, lead and tin may be employed; but in the simple dry cell which is herein described there will be a greater electromotive force if copper and zinc are used. Cells of this character and others, which may be termed self-generators of electricity, are known as "primary cells" to distinguish them from "storage" or "secondary" cells, which will be discussed in detail later

Dry Cells.—All, or almost all, of the present-day dry cells are composed of practically the same elements and have the same chemical action. Dry cells are primary cells and, though not " dry," as the name would lead us to suppose, contain a pasty substance. The zinc, negative (−) plate and the carbon, positive (+) plate, are placed in a moist paste usually consisting of ammonium chloride, zinc chloride, zinc oxide, plaster of paris and sawdust. The carbon rod, placed in the center of the zinc container, is surrounded by the pastelike substance. Moistened blotting paper separates the zinc container from actual contact with the paste, and the container is tightly sealed with wax or pitch to prevent rapid evaporation. Polarization is practically eliminated by employing peroxide of manganese mixed with the other elements forming the paste. A cross-section through a dry cell is shown in Fig. 11.

UNITS OF ELECTRICITY

The Coulomb.—The coulomb, named in honor of the French physicist, Charles A. Coulomb, is the unit of electrical *quantity*. A coulomb of electricity will flow in a circuit in one second of time when there is a pressure of one volt in the circuit having a resistance of one ohm. The coulomb is the quantity of electricity which a condenser of one farad capacity will absorb when subjected to a pressure of one volt.

The Ampere.—The ampere, also named in honor of a French physicist, André M. Ampere, is the unit of electric *current* and is defined as the current produced by an electromotive force of one volt in a circuit having a resistance of one ohm.

The Volt.—The volt is the unit of *electromotive force* or difference of potential, and is defined as the electromotive force necessary to produce a current of one ampere in a circuit having a resistance of one ohm. It is the electromotive force necessary to charge a condenser to one farad capacity with one coulomb of electricity. The volt was named in honor of Alessandro Volta, an Italian experimenter.

The Ohm.—The ohm is the unit of electrical *resistance* and was named for George S. Ohm, a German scientist who, in 1827, formulated Ohm's Law. A conductor having a resistance of one ohm will require an electromotive force of one volt to force a current of one ampere through it.

The Henry.—The henry is the unit of *self-induction*, or, as commonly expressed, the unit of inductance. The self-induction of a circuit is one henry when the induced electromotive force is one volt, while the inducing current varies at the rate of one ampere per second. Inductance is defined as that quality in a circuit which tends to oppose any change in the flow of electricity. It should not be confused with

" resistance " which opposes the actual flow of electricity. The henry receives its name from Joseph Henry, one of America's greatest scientists.

The Farad.—The farad is the unit of electrical *capacity* named for Michael Faraday, the eminent English scientist. A condenser will have a capacity of one farad when it will hold one coulomb of electricity when a pressure of one volt is applied across it.

The Joule.—The joule is the unit of electrical *energy* or work. If a force of one volt is used to cause an electric current to flow through a circuit, one joule of energy has been expended when one coulomb of electricity has flowed. The joule was named for James P. Joule, an English physicist.

The Watt.—The watt is the unit of electrical *power* and is the power due to a current of one ampere flowing under a pressure of one volt The watt is $\frac{1}{746}$ of one horsepower. It was named for James Watt, an English engineer.

Electrical Prefixes.—To denote multiples of the electrical units or parts of the units, there are the following prefixes:

(1) Kilo—Used to denote a quantity of one thousand times as great as a unit.
(2) Milli—Used to denote a quantity equal to one-thousandth part of a unit.
(3) Micro—Used to denote a quantity equal to one-millionth part of a unit.
(4) Meg—Used to denote a quantity one million times as great; for example, 1,000,000 cycles = 1 megacycle, and 1,000.000 ohms = 1 megohm.
(5) Pica—Used to denote a quantity one-millionth of one-millionth part of a unit (some authorities use picafarad to express the quantity micro-microfarad).

OHM'S LAW

Ohm's Law.—Ohm's law underlies all modern electrical theory and measurement. The student cannot over-estimate the value of this law, because only as it is thoroughly understood can electrical circuits be handled or cared for intelligently. The statement of the law is:

The strength of the current in amperes in any given circuit is directly proportional to the electromotive force and inversely proportional to the resistance as noted.

$$(I)\ \text{Amperes} = \frac{\text{Volts}\ (E)}{\text{Ohms}\ (R)}$$

which is set down

$$I = \frac{E}{R} \quad \text{or} \quad I = E \div R$$

If a circuit having a resistance of 4 ohms has a pressure of 12 volts applied to it the current strength will be

$$I = \frac{12}{4} = 3 \text{ amperes.}$$

By transposing the above equation we have

$$E = I \times R$$

and

$$R = \frac{E}{I} \quad \text{or} \quad R = E \div I$$

To find the voltage of a circuit, in which the current flow is 3 amperes and the resistance 180 ohms, multiply 180 by 3 ($E = I \times R$), giving the answer, 540 volts.

To find the resistance of a circuit in which a current of 1.5 amperes is flowing under a pressure of 225 volts, divide 225 by 1.5 ($R = E \div I$), giving the answer, 150 ohms.

From Ohm's Law it is learned that to increase the flow of current through a circuit of fixed resistance, the voltage must be increased; if the voltage is doubled the current is doubled (provided the resistance remains unchanged). If the flow of current through a given device and the pressure across its terminals can be measured, the resistance in ohms is obtained by dividing the pressure in volts by the current in amperes.

Formula for resistances in series: $R_{(\text{Total})} = R_1 + R_2 + R_3$, etc.

If, as shown in Fig. 12, the coil R has a resistance of 12 ohms and the e.m.f. of the four dry cells is 6 volts (the four dry cells of 1.5 volts each are connected in series, and the total e.m.f. is equal to the sum of the e.m.f.'s of the individual cells) the strength of the current through $R = \frac{6}{12} = 0.5$ amperes (assuming the internal resistance of the cells and connecting wires to be negligible).

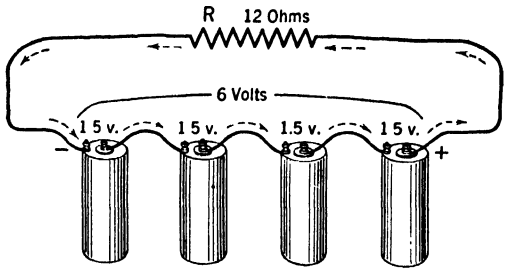

FIG. 12.—Four dry cells connected in series.

If, as shown in Fig. 13, the coil R has a resistance of 8 ohms and the e.m.f. of the four dry cells is 1.5 volts (the four dry cells of 1.5 volts

each are connected in parallel, giving no greater e.m.f. than that which is contained in each, but a current equal to the combined amounts

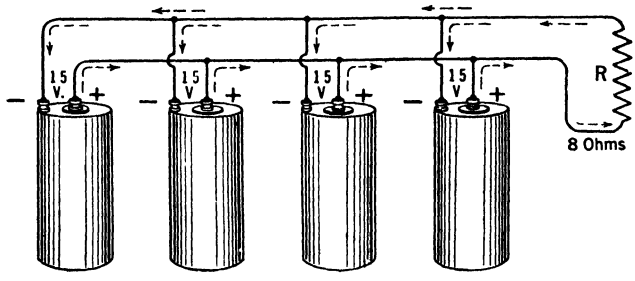

FIG. 13.—Dry sells connected in parallel.

of each cell), the strength of the current through R is $1.5 \div 8 = 0.1875$ amperes.

Now if, as shown in Fig. 14, a number of electrical contrivances are connected in series, the current through each is the same, regardless of its resistance. An electric lamp L_1, of 150 ohms, a second electric lamp, L_2 of 120 ohms, and a resistance coil of 40 ohms, are connected in series in the circuit to which an e.m.f. of 110 volts is applied. The total resistance of the three devices is 310 ohms, and the current flowing at any point in the circuit is $110 \div 310 = 0.35 +$ ampere.

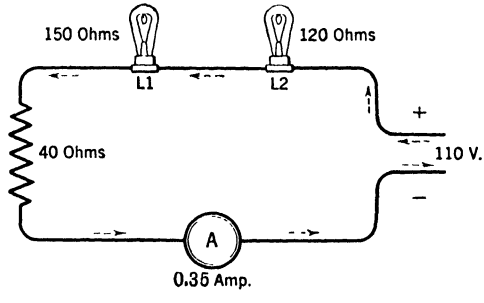

FIG. 14.—A circuit consisting of resistances connected in series with a current-measuring instrument—the ammeter.

Divided Circuits.—A divided or shunt circuit is an additional circuit provided at any part of a circuit through which the flow of current subdivides. One branch of such a circuit is said to be in multiple or in parallel with the other branch or branches.

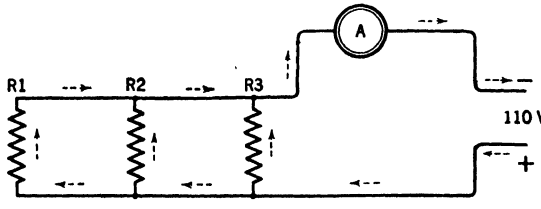

FIG. 15.—A circuit consisting of three resistances connected in parallel.

In Fig. 15 the three resistances, R_1, R_2 and R_3, are connected in parallel and then to an e.m.f. of 110 volts pressure.

If the three resistances are each of the same value the current will divide equally among them. If a current of 12 amperes is flowing in the circuit, as would be indicated by the ammeter A, 4 amperes will flow through each resistance. If the resistances are unequal, the current divides inversely as to the relative resistance of each of these branches.

It will be assumed that the resistance of R_1 in Fig. 15 is 35 ohms, R_2 14 ohms, and R_3 10 ohms. The current in each resistance can be determined by dividing the voltage by the resistance. Thus the current passed by R_1 resistance is $\frac{E}{R_1} = 110 \div 35 = 3.14+$ amperes; the current passed by R_2 resistance is $\frac{E}{R_2} = 110 \div 14 = 7.85+$ amperes; the current passed by R_3 resistance is $\frac{E}{R_3} = 110 \div 10 = 11$ amperes.

When several resistances are connected in parallel the joint resistance will be less than either resistance considered separately, and is computed as follows:

Formula for resistances in parallel:

$$R_{\text{(Total)}} = \frac{1}{\frac{1}{R_1} + \frac{1}{R_2} + \frac{1}{R_3}, \text{ etc.}},$$

where R = the joint resistance. Assuming that the resistance of R_1 in Fig. 15 is 35 ohms, R_2 is 14 ohms and R_3 is 10 ohms, the joint resistance of the three elements is equal to:

$$R_{\text{(Total)}} = \frac{1}{\frac{1}{35} + \frac{1}{14} + \frac{1}{10}} = \frac{1}{\frac{2}{70} + \frac{5}{70} + \frac{7}{70}} = \frac{1}{\frac{14}{70}} = 1 \div \tfrac{14}{70} \text{ or}$$

$$1 \times \frac{70}{14} = 5 \text{ ohms.}$$

It has been observed that two or more resistances in parallel will conduct an electric current more freely than one, and that the joint resistance of several resisting elements in parallel is less than the resistance of the smaller one.

However when a number of resistances are connected in series their joint resistance is the sum of several resistances taken separately.

Series-parallel Circuit.—A series-parallel arrangement of cells is at times desirable when a number of cells can be obtained, to give either the maximum current through an external resistance or to increase the capacity of the cells for maintaining a certain current for a long period

of time. Twelve dry cells of 1.5 volts each are grouped in a series-parallel combination as shown in Fig. 16. Each group of six cells is connected in series, giving an e.m.f. of 9 volts for each group. When the two groups are connected in parallel, as shown, their total e.m.f. is still 9 volts, but the quantity of current available has been doubled; that is, the quantity of available current in the parallel grouping is twice as great as that available in either of the individual series groups.

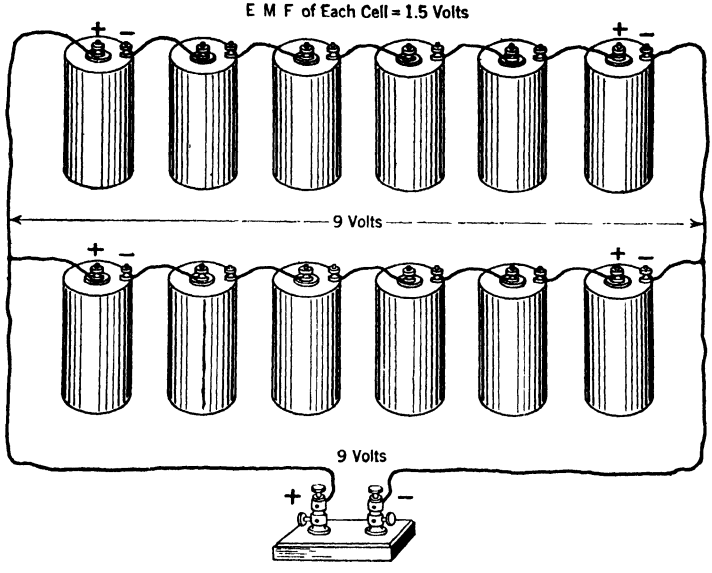

FIG. 16.—Dry cells connected in series-parallel.

Conductance of a Circuit.—The conductance of a circuit is the reciprocal of its resistance. (The reciprocal of a number is the quotient obtained by dividing one by that number, i.e., the reciprocal of 3 is $\frac{1}{3}$; of $\frac{5}{6}$ is $\frac{6}{5}$ or $1\frac{1}{5}$.) The unit of conductance is the mho (reverse spelling of ohm). A conductor of 1 ohm resistance has a conductance of 1 mho; if of 3 ohms resistance, $\frac{1}{3}$ mho; if of 6 ohms resistance $\frac{1}{6}$ mho; if of $\frac{7}{8}$ ohm resistance, $\frac{8}{7}$ or $1\frac{1}{7}$ mhos.

The resistance of a circuit is the reciprocal of its conductance. A conductor of 5 mhos conductance has $\frac{1}{5}$ ohm resistance; if of 9 mhos conductance it has $\frac{1}{9}$ ohm resistance.

CHAPTER IV

ELECTROMAGNETIC INDUCTION

TRANSFORMERS

Electromagnetic Induction.—Faraday discovered that if a wire with its ends joined was moved rapidly in front of a magnet, a current was induced in the wire. Electromagnetic inductance may be defined as the tendency of electric currents to flow in a conductor when the conductor is moved in a magnetic field so as to cut magnetic lines of force. In this discovery lies the principle of the operation of many forms of radio apparatus, such as generators, induction coils, alternating current transformers, etc.

If the two ends of a wire are connected to a galvanometer, as shown in Fig. 17, and moved in the magnetic field of the permanent bar magnet, the pointer of the galvanometer will be deflected to the right or left of its zero position. This deflection is caused by a current in the wire circuit, due to the induced e.m.f. in the wire itself, by moving it in the magnetic field. The wire conductor, however, must be actually moved in the magnetic field to induce a current in its circuit. This may be proved by subjecting the wire to the influence of a magnetic field but not actually moving the wire or the magnet, in which case there will be no deflection of the galvanometer pointer. When the wire is moved in the magnetic field it is said to be cutting the magnetic lines of force. If the wire were

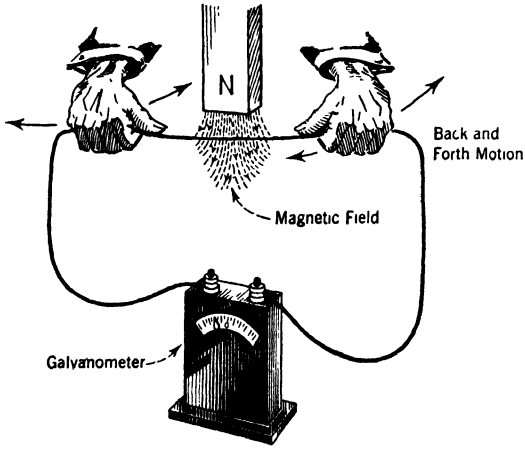

FIG. 17.—Demonstrating how current is induced into a wire by moving it in a magnetic field.

held stationary and the magnet moved, the same result would be obtained as though the wire were moved past the magnet.

If the *S* pole of the magnet is used instead of the *N* pole, identical results are found, except that the deflection of the galvanometer pointer is opposite to that of the *N* pole, due to a given direction of motion of the conductor.

If a galvanometer is connected between the ends of a coil, as shown in Fig. 18, and the bar magnet is thrust into the coil, the pointer of the galvanometer is deflected, indicating that there is a certain current flowing through the coil as a result of the induced e.m.f. If the bar magnet is held stationary inside the coil, the pointer of the galvanometer returns to zero position, indicating that the current in the coil has stopped. This result proves that a current of electricity will be induced in a coil of wire by a magnet so long as there is a relative movement between the coil and the magnetic field, or, we might say, when there is a change in the number of lines of force passing through the coil.

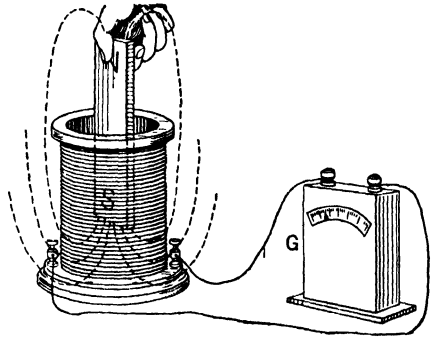

FIG. 18.—Producing current in a coil by utilizing the magnetic field of a bar magnet.

If now the magnet is withdrawn from the coil (Fig. 18), the pointer of the galvanometer is again deflected, but in the direction opposite to the deflection caused when the magnet was inserted in the coil, indicating a current flow of opposite direction. Inserting the magnet into the coil is, in effect, the same as increasing the number of lines of force passing through the coil; withdrawing the magnet is the same as decreasing the number of lines of force passing through the coil. The foregoing facts show that the direction of the current induced in a coil by a relative movement between it and a magnetic field depends upon whether the movement tends to increase or to decrease the magnetic lines of force passing through the coil. An experiment with the coil, magnet and galvanometer shows that the amount of current induced in the coil is dependent upon the quickness with which the magnet is inserted into the coil. A stronger bar magnet, which possesses a greater number of lines of force than a weaker one, will induce more current in the coil than a weaker magnet.

If the number of turns of wire composing the coil is increased or decreased, there is a corresponding increase or decrease in the current

induced in the coil. If two coils, one wound with 150 turns and the other with 300 turns, are subjected to magnetic lines of force, it will be found that twice as much current is generated when the magnet is inserted into the larger coil as when the same magnet is inserted at the same speed into the smaller coil.

In the foregoing explanations it was stated that currents were generated in the coil. This is not, strictly speaking, accurate. It is really an e.m.f. that is induced in the coil, and the current only flows as a result of this e.m.f. when the circuit through the coil is completed, in this instance by the galvanometer.

From the discussion of the preceding paragraphs it is observed that the magnitude of the induced e.m.f. in any circuit depends upon the rate at which the conductor forming a part of the circuit cuts magnetic lines of force. The magnitude of the e.m.f. is dependent upon the total lines of force cut per second by the conductor, or it may be stated that the induced e.m.f. is equal to the rate of change of lines of force multiplied by the number of turns in the conductor.

When a conductor cuts one hundred million (100,000,000) lines in each second during its motion, an electrical pressure of one volt is induced in the conductor; if it cuts three hundred million (300,000,000) lines of force in each second during its motion, an electrical pressure of three volts is induced therein. If a conductor cuts across a magnetic field of twenty million (20,000,000) lines of force 100 times per second, 20 volts will be induced in the conductor:

$$\frac{20{,}000{,}000 \times 100}{100{,}000{,}000} = 20 \text{ volts}$$

Mutual Induction.—Mutual induction is defined as the mutual interference of two electric or magnetic fields by their proximity without contact. More simply stated, it is the reaction of two independent electrical circuits upon each other when these circuits are so placed with respect to each other that the magnetic field due to the current in either of them will produce an effect in the other.

If, instead of using the bar magnet as explained and shown in Fig. 18, we replace the magnet by a coil through which a current is kept flowing, as shown in Fig. 19, the result produced duplicates that of the bar magnet.

In the case of mutual induction it is not necessary, however, to move one coil in and out of the second coil to change the number of lines of force passing through the second coil. The change may be readily accomplished by leaving the first coil inside the second, and "making and breaking" (closing and opening) the battery circuit through the

one coil by means of a small switch, as shown in Fig. 20. The coil *P'* through which the current is flowing, is known as the *Primary Coil,* and the coil *S,* into which the current is induced, is known as the *Secondary Coil.*

Self Induction.—Self-induction, more briefly called "inductance,"

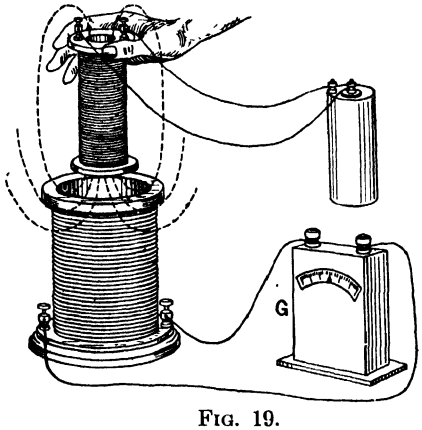

FIG. 19.

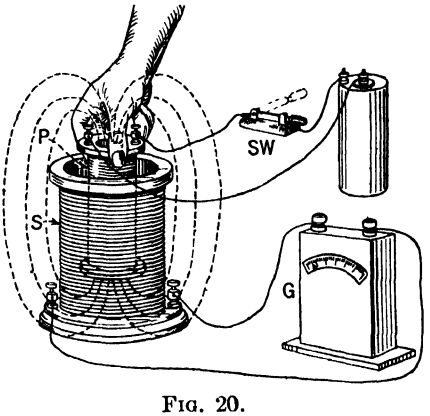

FIG. 20.

FIG. 19.—Illustrating the principle of mutual induction. (Electromagnetic induction.)

FIG. 20.—By merely closing and opening a switch in series with the primary coil, current is induced momentarily into the secondary.

may be defined as the property of a circuit that tends to oppose any change in the strength of current flow, with respect both to increase and to decrease.

If a coil, as shown in Fig. 21, is energized by a battery, *B,* a field is created about the coil. Each turn in the coil will produce a field that will cut the adjacent turns when the switch is closed, inducing in them electromotive forces which tend to oppose the e.m.f. supplied by the battery, *B.* But when the switch is opened current in the coil diminishes and the lines of force contract. By so doing they induce electromotive forces in adjacent turns that tend to set up currents in the same direction as the original current.

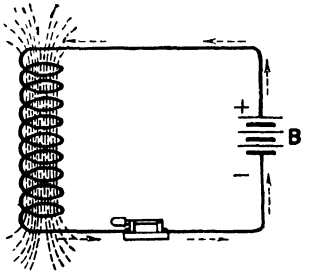

FIG. 21.—Showing how an electromagnetic field is set up about a current carrying coil.

Lenz's Law.—Lenz, a German scientist, discovered that *the direction of the induced current, in electromagnetic induction, opposes the motion producing it.*

In all cases of electromagnetic induction, the current produced by the induced e.m.f. will be in a direction that will tend to stop the cause producing it. Thus, if a magnet is moved toward a coil, the current in the coil will be in such a direction that the side of the coil toward the magnet will be of the same polarity as the end of the magnet toward the coil, which will result in the induced current tending to stop the motion of the magnet. When the magnet is moved away from the coil, the current in the coil will be opposite to its previous direction, and the side of the coil toward the magnet possesses polarity opposite to that at the end of the magnet toward the coil. Consequently they attract each other, tending to prevent the magnet from being moved.

If the primary coil (an electromagnet) shown in Fig. 22 is moved toward the secondary coil, the induced current flows so as to make the

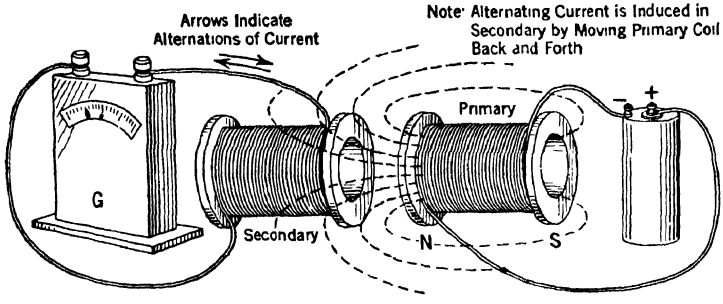

FIG. 22.—The galvanometer is useful in showing that alternations of current are induced in the secondary.

near end of the secondary coil of *N*-polarity, resulting in repulsion. When the primary coil is drawn away from the secondary coil, the polarity of the latter is reversed and attraction exists which opposes the separation of the primary from the secondary. The state of attractions and repulsions is maintained only while the coil is moving; when the movement of the coil stops, the current in the secondary also stops even though current is kept flowing in the primary.

The Helix and Solenoid.—A spiral of conducting wire wound cylindrically or like screw threads without crossing itself, is called a "helix." Helixes and solenoids are similar, but for the purpose of distinction a cylindrically wound conductor of a few turns is termed a helix, whereas a solenoid as shown in Fig. 23 consists of a number of turns, wound layer upon layer, and its length is usually greater than its diameter. Both a helix and a solenoid acquire magnetic properties similar to those of a bar magnet when a current is passed through their windings.

If the general direction of the lines of force inside the coil, Fig. 24, is from left to right, the right-hand end will be a north pole and the opposite end a south pole. The polarity of the coil can always be determined if the direction of the current is known. If, in looking at the end of the coil, the current flows clockwise around its turns, the nearest end will be a south pole; if the current flows in the opposite direction, it will be a north pole.

From the foregoing discussion it has been seen that the helixes and solenoids have north and south poles and possess all the properties of a permanent magnet, with the advantage of having the magnetism in the case of the helix and solenoid always under control.

It may be stated that the strength of the magnetic field of a solenoid

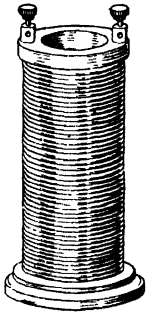

FIG. 23.

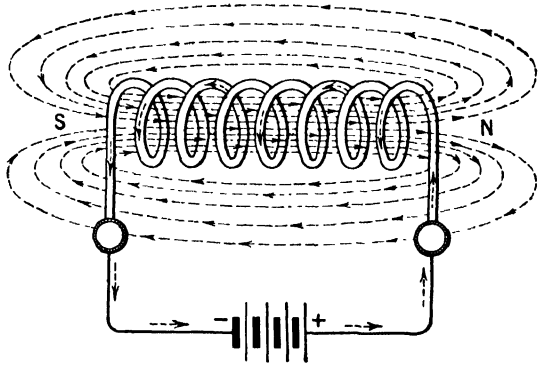

FIG. 24.

FIG. 23.—A laboratory type of solenoid.

FIG. 24.—Showing the direction of lines of force encircling a current carrying coil.

or helix is proportional to the strength of the current passing through it and the number of turns of wire composing the coil, but the magnetizing power or permeability may be increased from 200 to 2,000 times by inserting an iron core or bar of soft iron within the coil. Iron is the best conductor of magnetism, or lines of force, and its presence in a magnetic circuit decreases the opposition to the flow of lines of force and the number of lines is thereby greatly increased. In the case of a helix without an iron core some of the lines of force leak out of its sides between the turns composing it and hence do not extend through it from end to end. The iron core not only decreases the magnetic leakage between the turns, but it actually increases the number of lines, or magnetizing power, in the magnetic circuit, as before stated, because iron is a better conductor of magnetism than air by several thousand times.

Transformer.—The transformer, which will now be considered only in an elementary manner, operates on the principle of mutual induction. Its purpose is to receive alternating current—current which flows alternately in opposite directions at regular intervals at a certain voltage and deliver a-c. at a higher or lower voltage. (Alternating current is discussed thoroughly in following pages).

In its simplest shape one form of transformer consists of two separate and electrically independent coils of insulated wire wound upon a laminated iron core (laminated means composed of sheets or plates) that is common to both of the windings. The primary winding in Fig. 25, is connected to a source of alternating e.m.f. or voltage, and is known as the primary coil; the secondary winding delivers alternating current at a high or low voltage. Whether the current delivered is of high or low voltage depends upon the type of the transformer. If it is a "step-up" transformer the output voltage will be greater than the input, whereas if it is a "step-down" transformer the output voltage will be less than the input. A brief summary of the process of transformation is given in the following paragraph.

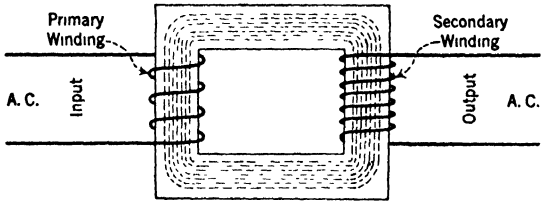

FIG. 25.—A schematic diagram of an iron core step-up transformer.

When an alternating current is supplied to the primary winding, it magnetizes the iron core periodically, causing a varying flux to flow through the iron core in accordance with the alternations of current. This varying flux induces an e.m.f. in the secondary which will cause a current to flow if the secondary circuit is closed. The current in the secondary circuit flows in the direction opposite to that in the primary, and as it increases it sets up a flux in opposition to that already in the core, thereby reducing its strength. This reduces the self-induction of the primary, permitting more current to flow in the primary. In this way the transformer becomes self-regulating; a rise of the secondary current causes an increase in the primary current.

CHAPTER V

MOTOR-GENERATORS—STARTERS

Necessity of Motor-Generator.—Because practically all ships nowadays are equipped with direct current generators for the purpose of supplying light and power, it is necessary to install a motor-generator to obtain an alternating current source of supply for the operation of a radio transmitter. The high voltage required for the transmitter may then be said to have been obtained from a source of alternating current which, in turn, is stepped-up to the necessary voltage by a step-up transformer.

The Motor and Generator Defined.—A motor is defined as a machine

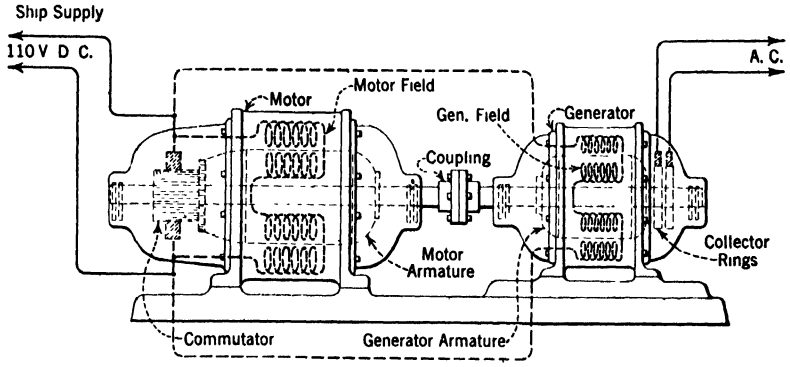

FIG. 26.—Detailed view of a complete motor-generator set of a radio transmitter.

that transforms electrical power into mechanical power; a generator is a machine that transforms mechanical power into electrical power by the principle of electromagnetic induction. When the two are coupled together they become a motor-generator, as shown in Fig. 26. Here a motor and a generator are coupled together, the motor being set into rotation by direct current, the generator in turn generating an alternating current of the required voltage and frequency.

As noted in Fig. 26, the direct current motor is mounted on the left and the alternating current generator on the right. The motor receives, in the case of a shipboard installation, direct current of 110

volts, and the generator generates alternating current of frequencies from 40 to 500 cycles and at voltages varying from 110 to 500 volts, according to the design. As observed, the generator field windings receive current from the same source as the motor (from the ship's generator). Both the motor and generator field windings are connected across the direct current supply line.

Underlying Principles of the Generator.—Unlike the simple battery or storage cell, the generator may generate either direct or alternating voltage. Whether the generator is a direct or alternating type can be

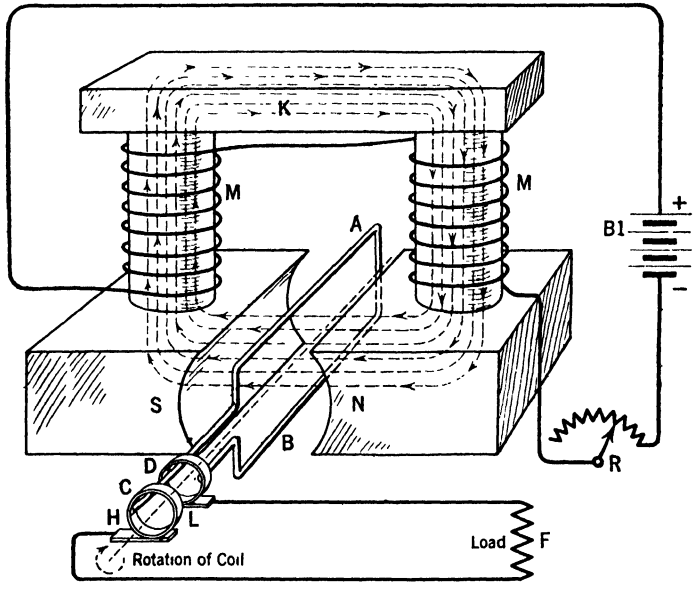

FIG. 27.—Elementary diagram of a generator showing the method of generating an alternating e.m.f. to serve an external load circuit.

determined by observing the part of the generator at which the current is collected. If the brushes rest on a commutator which is made up of a number of copper segments separated by insulating material, it is a direct current generator; if the brushes rest on two brass rings it is an alternating current generator.

The fundamental principle of the generator is as follows: Whenever a coil of wire rotates through a magnetic field of uniform strength in such a way that the number of lines of force enclosed by the coil increase or diminish uniformly, a current of electricity is induced in the coil, its strength at any instant being proportional to the rate of the change of flux with respect to the coil.

The essentials of a generator are:

(1) A magnetic field of constant strength.
(2) A number of coils mounted on a shaft and rotated in such a way as to cut through the magnetic field.
(3) Means for conducting the current induced in the rotating coils to an outside circuit.

Operation of the Generator.—A diagram of an elementary generator appears in Fig. 27. A uniform magnetic field is set up between the magnetic poles *N* and *S* by the current from the battery *B*-1 which flows through the magnetic windings *MM*. The rectangle of wire *AB* is mounted on a shaft which rotates clockwise. Two brass rings *CD* are mounted on the shaft but insulated from it. The copper brushes *H* and *L* make contact with these rings, and the circuit is completed through *F* (or any load requiring current).

According to the principle just explained, if the loop *AB* rotates around its axis, an e.m.f. is induced in the loop, the magnitude depending on the rate of change of the number of lines of force threading through the loop. When in the vertical position of Fig. 27, the loop encloses the maximum number of lines of force, but when side *A* goes underneath the *S* pole and side *B* goes underneath the *N* pole, as shown in Fig. 28, the loop will enclose the minimum number of lines of force when it has moved 90 degrees, or is in a horizontal position. As *A* moves out of the field of the *S* pole and *B* out of the *N* pole, the loop reaches another vertical position (but with the two sides of the loop reversed) and again encloses the maximum number of lines of force. As the rotation of *AB* continues, side *A* goes into the field of the *N* pole and side *B* goes into the field of the *S* pole, where for a second time the minimum number of lines of force are enclosed, after which the loop returns to the position mentioned at the beginning.

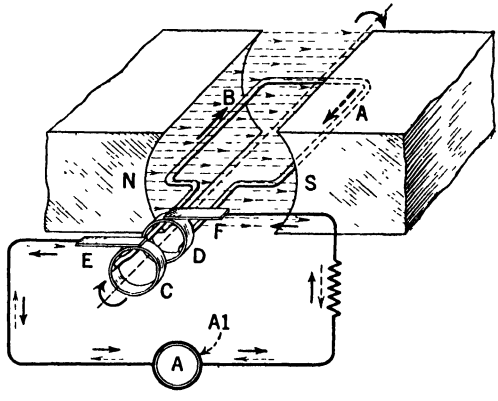

FIG. 28.—Showing the armature coil connected to collector rings to obtain a reversal of current in the external or load circuit of an a-c. generator when armature coil *A*, *B*, rotates through the magnetic field.

Now, according to the rule which governs the direction of the flow of current in a conductor cutting through a magnetic field, when AB is in the position of Fig. 28, a current will flow towards the rear of the loop in the left-hand side, and towards the front of the loop on the right-hand side. Then if AB continues for a half-revolution, so that A is cutting through the N field and B through the S field, current will flow in AB in the opposite direction. It is clear that in a complete revolution, AB undergoes two changes of the current which flows in one direction around the loop and then in the opposite direction. The

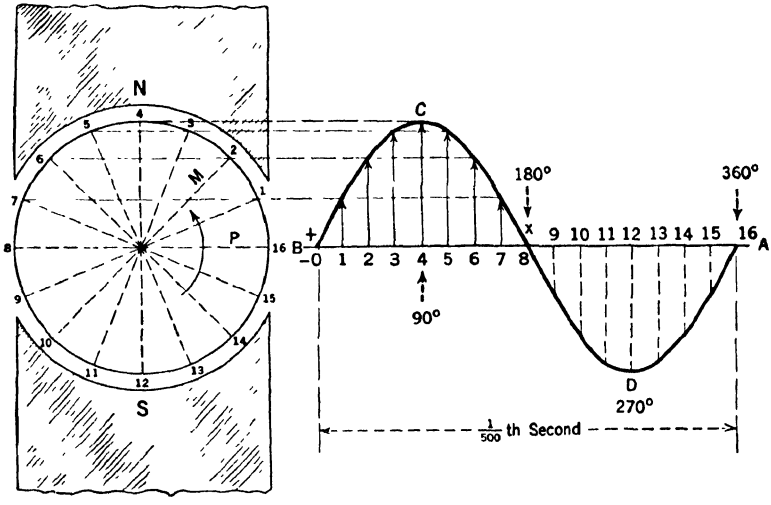

FIG. 29.—Sine curve depicting the changes in strength of the e.m.f. or current through one cycle. This curve represents only one cycle of the output of a 500 cycle a-c. generator.

current is then said to have gone through a complete cycle, as shown by the solid and dotted arrows in the external circuit.

It is observed that during the first quarter-revolution of loop AB, or from zero deg. to 90 deg., the e.m.f. increases from zero to maximum; from 90 to 180 deg. the e.m.f. decreases from maximum to zero; from 180 to 270 deg. the e.m.f. again increases from zero to maximum, and from 270 to 360 deg. the e.m.f. again decreases from maximum to zero.

The changes in the strength of the current induced in AB can be shown by a wave-like curve as in Fig. 29, in which the successive positions of the loop are indicated by the positions 1, 2, 3, 4, 5, 6, 7, 8, etc. If the loop is in position 8–16, and is then rotated one complete revolution, or 360 deg., the e.m.f. gradually rises, maximum e.m.f. being

attained in position 4–12. This increase of e.m.f. is apparent in the ascending slope of the curve B to C. From position 4–12 on, the e.m.f. decreases (as seen in the descending slope of the curve C to X), the minimum cutting of the lines of force taking place at point 8–16. This corresponds to the point X on the horizontal line BA. At point X a reversal of e.m.f. takes place. As the loop continues the revolution, the lines of force are cut on an increasing angle, shown by the ascending slope X to D) another maximum of e.m.f. being attained at point 12–4, but of the opposite sign, as shown at point D. From this point the e.m.f. decreases to zero or when the loop AB is in the position of 16–8. This curve depicts the gradual rise and fall of the e.m.f. in a generator coil and is known as a sine curve. The curve shows the relation between time (fractions of a second) and the strength or amplitude of the current at any given point during the complete revolution of a generator coil. The curve represents a complete cycle of alternating current. Vertical lines drawn from the horizontal AB represent time in fractions of a second. The horizontal lines drawn from the successive positions of the coil, 1, 2, 3, 4, etc., correspond to the position of the generator coil at any particular instant. At points where the horizontal and vertical lines intersect, a common line is drawn connecting them, which results in the wave-like curve.

Determination of Frequency.—The frequency of an alternating current generator is expressed in cycles per second. As stated in the previous paragraph, one complete cycle of current is generated when AB makes a single revolution. Hence, if AB rotates 60 complete revolutions per second, there are 120 reversals or alternations of current per second. Since two alternations of current constitute a complete cycle, the frequency of this generator is said to be 60 cycles ($120 \div 2 = 60$).

The frequency of any alternator may be determined by first counting the number of field poles and by measuring the speed of the armature per second, using the following formula:

$$\text{Frequency} = \frac{N \times S}{2}$$

where

N = the number of field poles;

S = the speed of the armature in revolutions per second.

Direct-reading frequency meters, which will be discussed later, are in daily use.

Strength of Magnetic Field.—The strength of the magnetic field about the poles N and S, Fig. 27, is proportional to the strength of the

current in amperes and the number of turns of the coil. The strength of the magnetic field, often expressed in ampere-turns, is the same whether a current of a large number of amperes is flowing through a few turns of wire, or a relatively weak current flows through a greater number of turns. The turns of the field winding of any generator are of a fixed number; therefore, the strength of the magnetic field is regulated by increase or decrease in the strength of the current flowing through the field winding. The field current is regulated by a device known as a field rheostat, which is simply a variable resistance connected in series with the circuit.

The voltage developed in any given generator coil is proportional to the rate of cutting of the magnetic field. In the case of the loop AB in Figs. 27 and 28 the total flux passes in the coil twice and out twice, during one revolution or during one cycle. If the coil enclosed 100,000,000 lines of force and made one complete revolution per second, 100,000,000 lines of force would be thrust into the coil twice and thrust out twice. This would be the equivalent of cutting 400,000,000 lines of force per second and in this particular case the induced e.m.f. would be 4 volts. If the number of turns on the armature winding were doubled, all other conditions remaining equal, the voltage would be doubled, or we might state that if there were N turns, the e.m.f. developed would be N multiplied by that of 1 turn.

The fundamental equation for the alternating generator is:

$$E = \frac{N \times n \times \phi \times p \times 2}{100{,}000{,}000}$$

where E = the average voltage of the generator;
n = the revolutions of the armature per second;
N = the number of conductors on the surface of the armature;
ϕ = the total number of lines of force;
p = the number of field poles.

In a commercial generator, the only factors in this question which are variable are (1) the density of the magnetic field and (2) the speed of the generator armature per second. We see from this that the voltage of any generator may be augmented by increasing the speed of the armature or by increasing the strength of the magnetic field surrounding the armature coils. Commercial generators are usually constructed for constant speed. Regulation of the voltage is obtained by means of the field rheostat, which will be explained later.

The Alternating Current Generator.—The essential parts of an alternating current generator are:

(1) Field magnets.
(2) Armature.
(3) Collector rings.

The diagram of Fig. 30 is intended to show only the general details of the construction and connections of an alternating current generator. The field poles which are firmly bolted to the circular iron frame are represented by *N*, *S*, *N*, *S*, the armature at *M* and the collector rings at *EF*. The field poles are wound alternately in opposite directions, so that the current circulates about the turns in opposite directions, giving the poles alternately north and south polarity. The armature *M* is built up of a number of slotted sheets of soft iron, which are pinned together and mounted on a common shaft, the copper conductors lying lengthwise of the core in such a way that the coils will be filled and emptied with magnetic flux (coils not shown). If these coils are properly connected together, the current induced therein (by the change of flux) will flow in the same general direction, the voltage of one coil being added to that of the next coil. It should be especially noted that the source of continuous or direct current for exciting the field poles of an alternator is generally supplied from an external source, which may be either a small direct current generator, known as an exciter, or a battery of storage cells. In most cases encountered in radio installations, the e.m.f. of the direct current source is 110 volts d-c. and the turns of the field winding are of such number that the correct quantity of current flows with small amounts of resistance in series at the rheostat *R*. As already explained, this resistance is known as the field rheostat or field regulator.

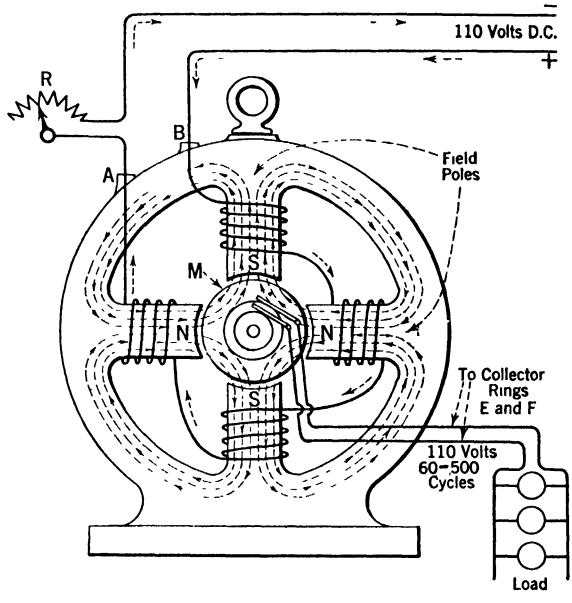

FIG. 30.—An elementary diagram of a four pole a-c. generator.

When the armature M revolves at a uniform rate, an alternating current is induced in the coils, which is collected by two brushes in contact with collector rings E and F, the voltage varying with the design of the machine. For purposes of ordinary radio communication the voltage of the generator may vary from 110 to 3000 volts.

If the armature of Fig. 30 were revolved 1800 revolutions per minute, current at a frequency of 60 cycles per second would be obtained from its armature. Remembering the formula given for determining the frequency, we see that in a complete revolution of the armature any conductor passing through four fields sets up four reversals of current. If the armature revolves at 1800 revolutions per minute, corresponding to 30 revolutions per second, there will be 4×30 or 120 reversals of current, or a frequency of 60 cycles. If the generator had 32 field poles, the frequency will be 32×30 or 960 alternations, corresponding to 480 cycles.

The student should understand that the foregoing description and drawing simply show in an elementary way the construction and functioning of a generator. The diagram is intended merely to indicate the connections of the machine, the direction of the magnetic lines of force, and the method by which the voltage generated by the armature is regulated.

The Direct Current Generator. - Direct current is obtained from generator coils by a commutator, which is placed on one end of the armature driving-shaft. In simple form it consists of a split brass or copper ring in two parts, CD, which is thoroughly insulated from the armature shaft (shown in Fig. 31). The circuit from the loop AB is completed through the contact brushes E and F through an external load as at R.

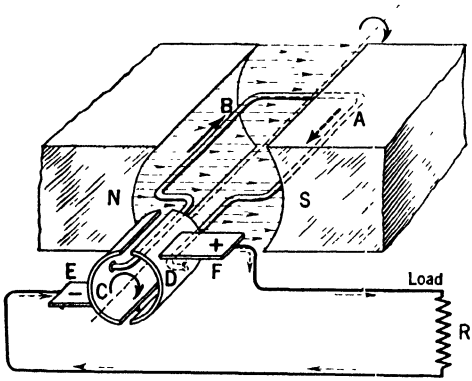

FIG. 31.—Showing how an armature of a d-c. generator is connected to commutator segments to supply a direct current to the external or load circuit.

The function of the commutator should be clear from the following explanation: Assume that the coil AB is in rotation in the direction of the curved arrow; then, in the position shown in Fig. 31, the segment D will be a (+) pole and segment E, a (−) pole. The current will therefore flow in the external circuit from

brush F to brush E. When AB turns completely over, so that side B goes under the south pole and side A under the north pole, the current will flow in B as it did formerly in side A, that is, through the coil towards the brush F. Similarly, when A is in the north field, the current will flow away from brush E. Therefore, the current will flow in the external circuit in the same direction as in the first case.

It can be readily understood that when AB turns completely over as suggested in the preceding paragraph, that current will flow opposite to that when B was cutting through the north field, but we must keep in mind that commutator segment C now makes contact with brush F instead of brush E. Thus the current will flow in one direction in the external circuit irrespective of the rate at which AB rotates.

A steady flow of current like that obtained from a battery of chemical cells cannot be obtained from the generator; the latter in reality generates a pulsating current. If the generator armature is composed of a great number of coils, the pulsations are so minute, and follow each other so rapidly, that the current is practically continuous. That is, these pulsations are made to overlap one another by mounting a number of loops of the armature and connecting them in series, so that immediately as one set of coils passes the position of maximum cutting of the lines of force, another set will take their place. The greater the number of the armature coils, the greater will be the number of commutator segments required. In fact, commutators in commercial generators may have from 50 to 150 segments, depending upon the design of the generator.

The Electric Motor.—A motor, as previously explained, is a machine for converting electrical energy into mechanical energy. The fundamental operating principle of the motor is as follows: A wire carrying a current placed in a magnetic field will tend to move in a direction at right angles both to the direction of the field and to the direction of the current. For example, if the plane of a given coil of wire lying between the poles of a magnet is parallel to a magnetic field and a current is passed through the coil, it will tend to turn or to take up a position at a right angle to the magnetic field. If the current is reversed when it has reached this position, the coil will continue to revolve.

The action of the motor can be simply explained by the diagram, Fig. 32, where a motor armature, commutator and brushes, as well as the field poles, are represented in a conventional manner. If the terminals GH are connected to a source of direct current, part of the current will circulate through the field windings and part through the coils of the armature between the two brushes. If the current flowing through the armature coils bears the correct direction to that flowing

through the field windings, a state of magnetism such as shown in Fig. 32 may be produced. The upper half of the armature core above the imaginary line XX will be a south pole and the lower half a north pole The lower half of the armature will then be attracted by the south field pole and repelled by the north field pole, and the upper half will be repelled by the south field pole and attracted by the north field pole. This may be presented in another way by stating that the coils of the armature tend to turn until they enclose the greatest number of lines of force from the field poles. The general strain of this attraction and repulsion is seen to be clockwise.

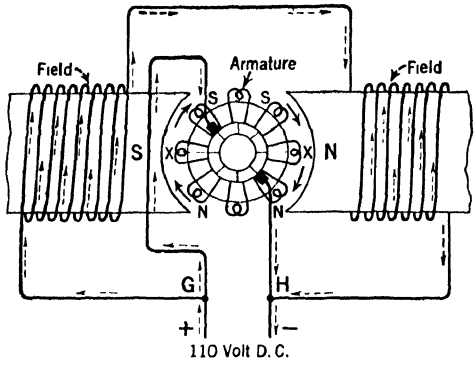

FIG. 32.—This view shows why a d-c. motor armature is set into rotation when the field and armature coils are supplied with current from a d-c. source.

The movement of the armature will be continuous because the commutator acts to maintain the flow of current constantly in the same direction through the two sides of the armature. Consequently, the upper half of the armature will always be a south pole, while the lower half will be a north pole, irrespective of the speed at which the armature revolves.

It would have no effect on the general direction of rotation if the connections from the source of current to the motor were reversed because the polarity of the flux in both the armature and the field poles would be reversed accordingly. The strain of the two magnetic fields also would have the same general direction and the motor would revolve in the same direction as before. Careful consideration of these facts reveals that in order to change the direction of rotation of a motor armature the flow of current must be reversed independently in either the armature or field poles.

Motors, like generators, may have either series, shunt, or compound field windings.

Fundamental Principle of Rotation of a Motor Armature Coil.—How the motion is imparted to a current carrying conductor may be understood by reference to Fig. 32*a*. A cross-sectional view of part of an armature coil, or conductor, is shown in order to represent the relation existing between the magnetic field of the armature and that

produced by the field poles. When the conductor receives current, magnetic lines of force are established in the space surrounding it, as shown by the concentric magnetic whirls marked by dotted circles, the arrows indicating the direction of their force. It is seen that some of the lines of force comprising the main field between north and south

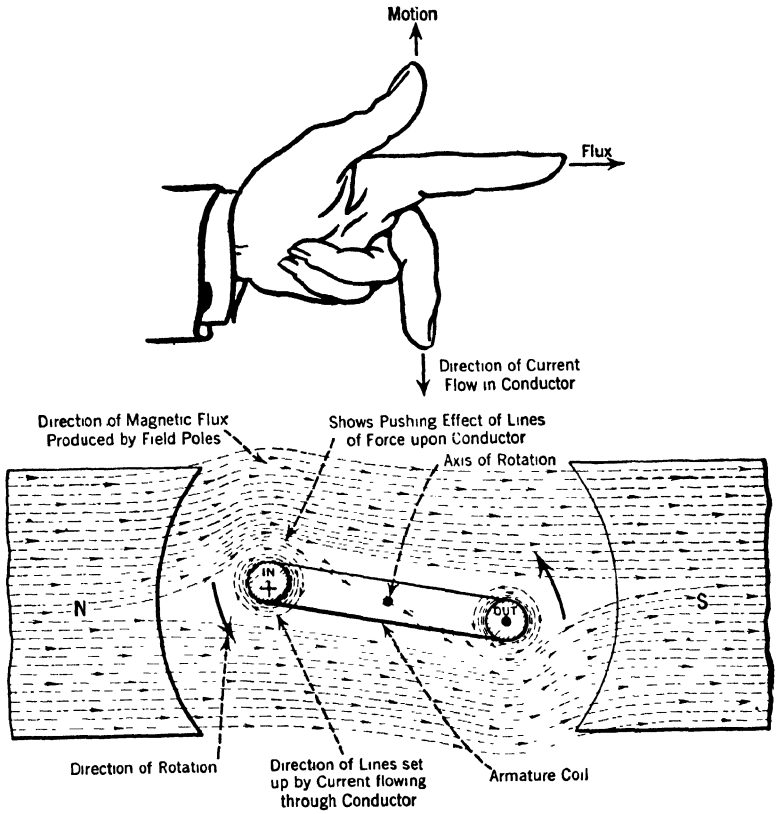

FIG. 32*a*.—The practical application of the "left hand rule" for determining the direction of rotation of a motor armature.

poles are distorted because of the influence exercised by the magnetic lines surrounding the conductor.

The rotation of the conductor is brought about by the natural law that distorted lines of force always seek to straighten themselves as quickly as possible in order to restore equilibrium. The main field lines, in tending to straighten themselves, are exerting a pushing effect upon the lines around the conductor, and since the conductor is *free to move* it will do so. It is obvious that as the armature conductor moves, it

will occupy different positions in the main field, and at any given instant the main field lines will be distorted and will attempt to resume immediately their unstressed and natural condition. This action keeps the armature conductors (coils) rotating so long as current passes through them. Because the motor armature coils are continually supplied with current from the power line and the direction of the current through them is reversed periodically (which is the function of the commutator, made necessary because the armature coils must pass through north and south fields in succession), the armature will be kept in rotation. By employing the left-hand rule, the direction of armature rotation may be determined.

Counter Electromotive Force.—When a motor armature is set into motion by an external current, the loops of wire composing its coils cut through the magnetic field and induce reverse electromotive force, counter to that which originally caused the motion. This back pressure is known as counter electromotive force which governs directly the speed of a motor. The difference between the impressed and the counter voltage determines the actual voltage impressed on the circuit and the flow of current in the armature. The counter voltage is proportional to the speed of the armature, the number of armature wires, and the strength of the magnetic field which is enclosed.

The speed of a motor supplied with current at constant pressure varies directly with the counter electromotive force, and in any given machine the stronger the field, the slower will be the speed of the armature. If the field of a motor is weakened by inserting resistance in the excitation circuit, the armature will increase its speed up to a certain point, or until the increased speed of the armature increases the counter e.m.f. to such an extent as to cut down the armature current. Up to this point, however, the speed of any given motor can be varied by simply increasing or decreasing the field strength.

The " pull " of the motor armature is directly proportional to the strength of the magnetic field. (The term " torque " is applied to the twisting force produced in the armature as long as the current is on. " Torque " is the result of " pull " and " leverage.") In the case of the shunt-wound motor, where the field is of constant strength, the pull of the armature depends upon the amount of current through its windings. Hence if we weaken the field, the reduced counter e.m.f. will permit increased flow of current in the armature, and therefore will increase its speed.

The speed of a shunt-wound motor is self-adjusted in the following manner: If a load is thrown on suddenly, the armature will have a tendency to slow down, but this decreases the counter electromotive force

and therefore increases the current flowing through the armature windings. This causes the motor to return to its normal speed of rotation.

We see from the foregoing that the speed of a shunt-wound motor can be varied within limits by the use of a variable resistance connected in the field circuit.

The motors of the motor-generators used in radio communication are designed to permit variation of speed approximately 20 per cent above and below the normal speed.

Shunt-Wound Generator.—It has been explained previously that continuous or direct current must flow through the field windings of an alternating current generator, and that this current is obtained from an external source. In the direct current generator, the current for excitation of the field is obtained from its own armature, shown at *M* in Fig. 33.

When the terminals of the field winding are tapped across the brushes of a direct current generator, it is called a shunt-wound generator.

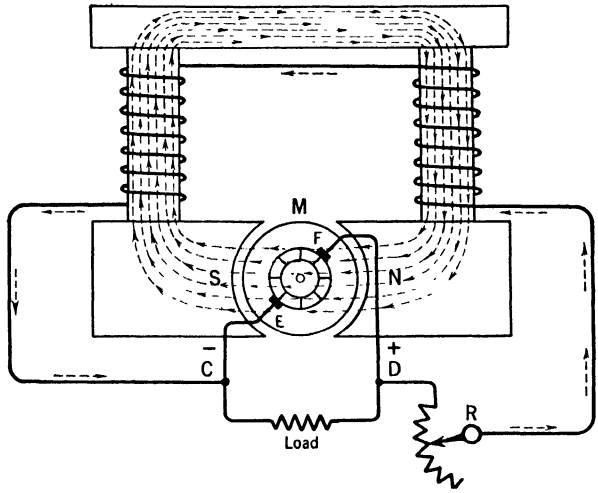

FIG. 33.—Illustrating the principle of how current is supplied to the field windings by the induced current in the armature of a shunt-wound d-c. generator.

The circuit for this machine is shown in Fig. 33, where the terminals of the field winding are tapped across the armature circuit at points *C* and *D*. A regulating rheostat connected in series with the field circuit at *R* permits an increase or decrease of the strength of the current flowing. The field winding of the shunt generator is composed of a large number of turns of comparatively fine insulated wire, the actual number of turns being governed by the flux required, whereas the armature coils have comparatively coarse wire. Two paths are presented to the current as it flows from the armature of this machine, one being the field circuit and the other, the external, or load, circuit.

In well-designed shunt-generators the resistance of the shunt circuit is always greater than the resistance of the armature and external cir-

cuit, and the strength of the current flowing in the shunt coil is comparatively small, even in the larger types of generators.

The student may question how current is set up in a machine of this type when it is first put into motion. The fact is that the initial building up of the current is due to residual magnetism in the field cores. When a piece of soft iron has been magnetized, no matter how soft the iron may be, a certain number of magnetic lines of force are retained when the magnetizing current has been turned off. These lines are known as the *residual lines of force* and the cores of the field winding are said to possess *residual magnetism.*

When the generator armature is first set into rotation, the residual lines of force pass in and out of the armature conductors, through the core, generating therein a feeble current which flows to the field winding and increases the number of lines of force threading through the armature coils. A stronger current is induced in the armature conductors. This continually adds to the strength of the field until the normal voltage of the generator is established. The complete process usually requires 10 or more seconds. After the generator armature attains its normal speed, the voltage across its terminals may be raised or lowered by the rheostat R. If the resistance of R is increased, the voltage diminishes, or if the resistance of R is decreased, the voltage increases.

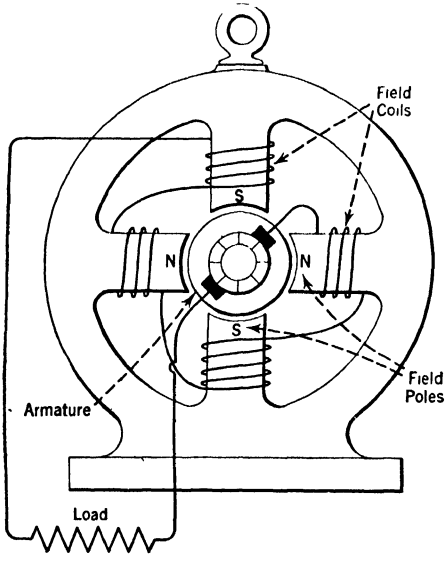

FIG. 34.—A series-wound d-c. generator.

Series-Wound Generator.—A diagram of a series-wound generator is shown in Fig. 34. The field magnets (poles) of this type are wound with a few turns of thick wire joined in series with the armature brushes, and all of the current generated by the armature passes through the coils of the field magnets to the external circuit. The current in passing through the windings of the field magnet energizes them and strengthens the weak field due to the residual magnetism of the cores. This results in a gradual building up of the magnetic field. The important characteristic of this machine is its ability to furnish current at increased voltage as

the load increases, for it is clear, from previous explanations, that the greater the strength of the field current, the greater the strength of the magnetic field from pole to pole. The strength of the field current flowing through a series-wound generator, and therefore the voltage across its armature, is regulated by cutting out turns of the field through the medium of a multi-point switch, or, as may be done in the case of any type of generator, the voltage can be regulated by variation of the speed of the armature.

Compound-Wound Generator.—The compound-wound generator, a diagram of which is shown in Fig. 35, combines the desirable characteristics of both the series- and shunt-wound machines, and gives a better regulation of voltage on circuits of varying load than is possible with a generator of either former type. The field magnets of the compound generator are wound with two sets of coils, one set being connected in series with the armature as shown at *SR*, and another set in shunt to the armature and external circuit as shown at *SH*. The function of the series winding is to strengthen the magnetic field by the current taken through the external circuit, and thus automatically sustain the voltage under variation of load.

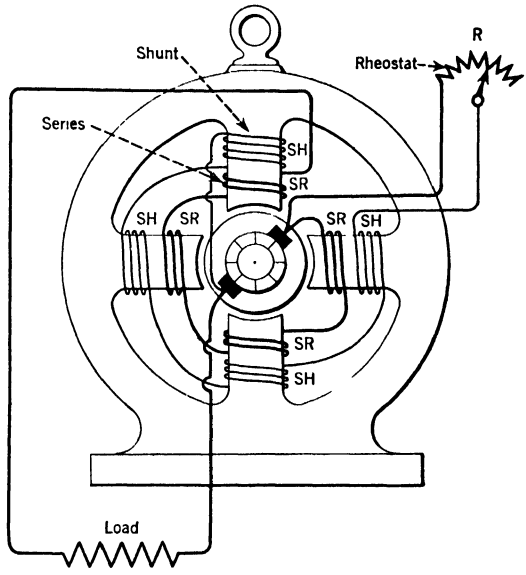

FIG. 35.—Showing the arrangement of the series and shunt field coils of a compound-wound d-c. generator.

In the case of the shunt-wound generator, as the external load is increased, the potential difference at the armature terminals will fall, but in the case of the compound-wound generator, this drop of pressure is counteracted by the series winding, the current which flows in it increasing with the load and causing the pressure to rise. The number of turns of each winding and the relative strength of current are proportioned so that a practically constant pressure is maintained under varying load. Initial adjustments of the voltage can of course be secured by means of a field rheostat, as shown at *R*.

It should be noted that current must circulate in both the series and shunt windings in the same general direction in order that the resultant magnetic fields may have the same general direction.

Motor with Differential Field Winding.—As previously explained, the speed of a motor is increased or decreased by regulation of the strength of the magnetic field, and any reduction of field flux of a given machine increases the speed of the armature. By the use of the differential field winding shown in Fig. 36, the flux of the shunt field is automatically weakened in accordance with the external load, and the speed is therefore self-regulated. Confining our vision strictly to the windings of the field poles, two distinct sets of coils will be seen, one a series winding, *SR*, in series with the armature, and the other a shunt winding, *SH*, connected across the main power line.

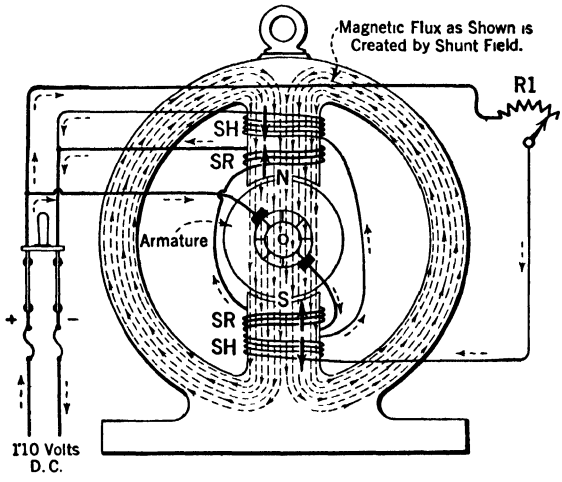

FIG. 36.—Differentially wound d-c. generator.

If the current in these two windings circulates in opposite directions, a differential field is produced and the resultant field will be of greater or less intensity, according to the current taken by the armature. A suddenly applied load will tend to slow the armature down, and this will reduce the counter e.m.f. of the armature coils. Accordingly increased current will flow through the series windings, which will reduce the counter e.m.f. to a still lower figure, permitting an increase of armature current that will restore the motor to normal speed.

Through use of the differential winding, motors may be designed to give very close speed regulation, and are well suited for driving alternating current generators employed for radio communication.

If we keep before us the fact that the counter e.m.f. developed in a motor armature acts effectively as a resistance to the flow of current, and that this reverse e.m.f. increases with the speed, it is easily seen that a considerable difference must exist between the armature resistance when standing still and its effective resistance when in rotation. If

such a motor armature should be started by connecting its terminals directly to the power mains, an excessive current would flow. This would do injury to the windings and the commutator. A device known as a motor starter (discussed later) is required to reduce the starting current to a safe value.

Motor-Generators for Radio Transmitters.—For the operation of radio transmitters, a motor-generator is required that will give:

(1) Constant frequency under variable load.
(2) Constant alternating current voltage under variable load.
(3) Or both (1) and (2).

For the quenched spark transmitter, a constant current generator having a falling voltage characteristic under a load is preferred.

When a motor-generator is connected to a radio transmitter, is it subjected to an intermittent load following the closing of the transmitting key; therefore, some means must be provided whereby a uniform alternating current frequency and voltage can be maintained. In practice, the necessary regulation is obtained by special motor field and generator field windings. Hence motor-generators may be classified with respect to their windings. Three different types are in commercial use:

(1) A shunt-wound motor coupled to a simple alternating current generator.
(2) A shunt-wound motor coupled to an alternating current generator, having a compound-wound field.
(3) A motor with differentially compounded fields coupled to a simple alternating current generator.

An example of type (1) is the 2-kw. 500-cycle motor-generator used with panel spark transmitters; of type (2) the 1-kw. 60-cycle motor-generator; of type (3) the 2-kw. 240-cycle motor-generator. All three types are in use in the radio sets of the various radio operating companies.

The fundamental circuit of type (1) is shown in Fig. 37, of type (2) in Fig. 38, and of type (3) in Fig. 39. The student should take careful note of the position of the generator and motor rheostats in all three diagrams. This is advisable because, in addition to the automatic regulation which these machines are designed to give, initial adjustments of either voltage or frequency can be made by the rheostats. For example, if resistance is added at the motor field rheostat, the motor speeds up and therefore increases the frequency of the generator.

If resistance is added at the generator rheostat, the generator field current reduces and the voltage across the armature terminals drops; but

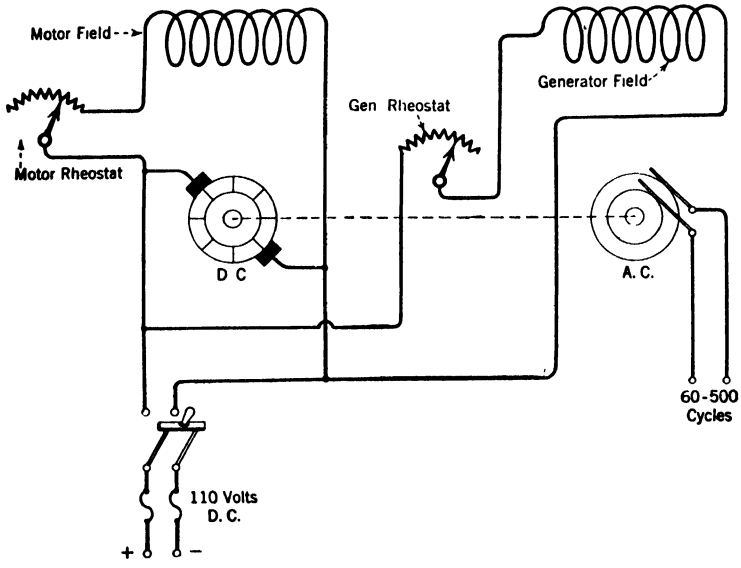

FIG. 37.—Diagram of a shunt-wound motor coupled to an a-c. generator.

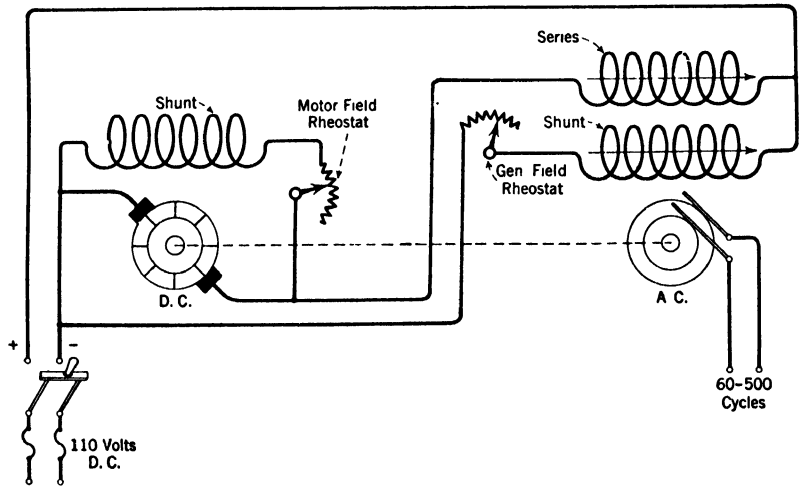

FIG. 38.—A shunt-wound d-c. motor coupled to an a-c. generator with compound wound field.

the frequency, in this case, is not affected. If more current is admitted to the field coils, the voltage of the armature increases.

By proper design, fair regulation of frequency and voltage is secured with the shunt-wound motor-generator of Fig. 37 under the conditions imposed by a radio transmitter.

It will be noted from the diagram of Fig. 38 that the generator has two field windings, a " series winding " interposed in the motor armature circuit, and a " shunt-winding " connected directly across the d-c. line. The windings are mounted on each field pole of the generator so that the lines of force generated by the series winding and those of the shunt winding flow in the same general direction. When a motor generator of this type is subjected to load there will be a tendency

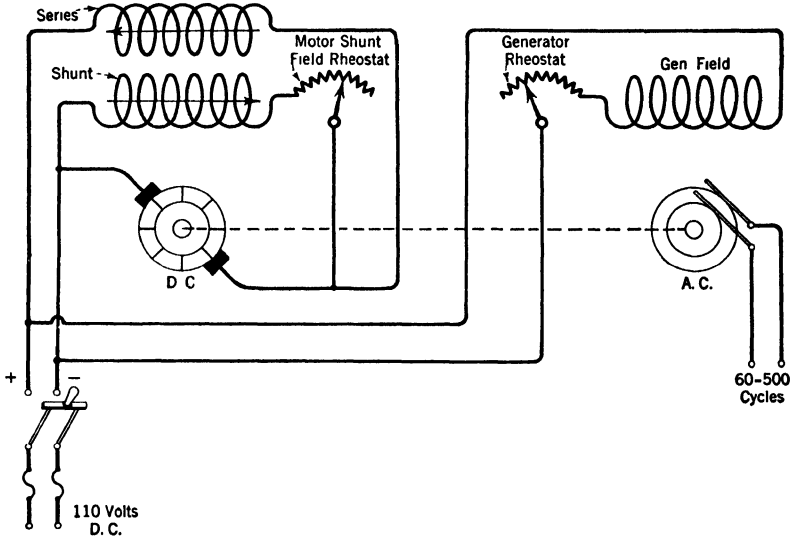

Fig. 39.—Diagram of a differential d-c. motor coupled to an a-c. generator.

towards a decrease in speed, but there will be an increase of current through the series winding (because it is connected in series with the armature). This has the effect of increasing the strength of the generator field, thereby maintaining the voltage of the alternator fairly constant under variable load. The motor of this machine has a simple shunt winding, with a speed-regulating rheostat connected in series. The voltage of the generator may be increased or decreased by means of the generator field rheostat.

The principal advantage of the motor-generator of Fig. 39 is that it maintains a uniform speed under variable load, which results in an unvaried frequency of current at the terminals of the alternator.

A photograph of the 2-kw. 500-cycle General Electric motor-gen-

erator appears in Fig. 40, wherein the motor-generator armatures are clearly shown. The generator has 30 field poles and the motor 2 field

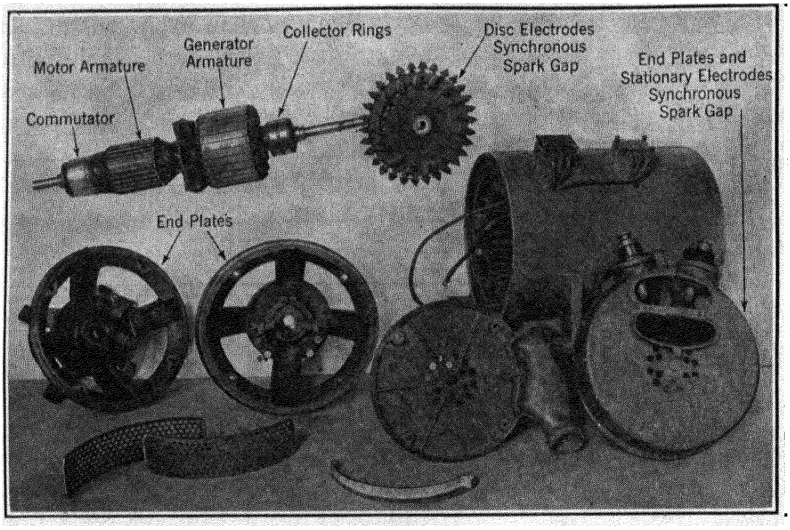

Fig. 40.—General Electric 2-kw. 500-cycle motor-generator.

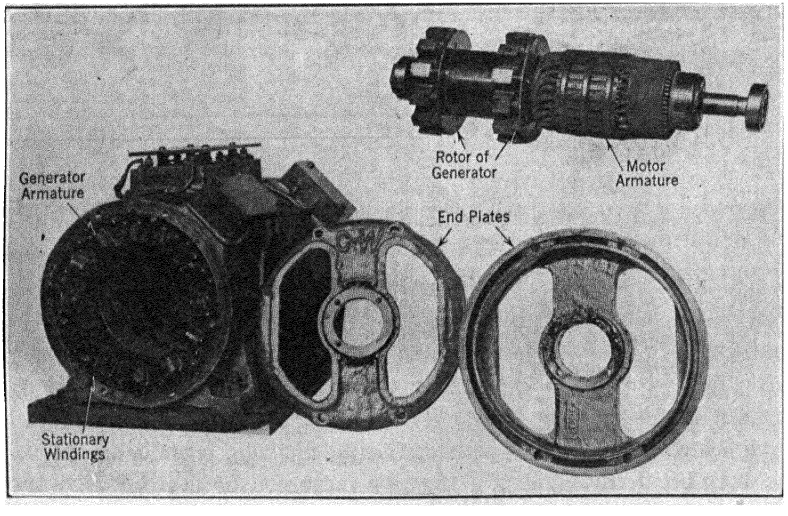

Fig. 41.—The ½-k.w. 500-cycle Crocker-Wheeler motor-generator.

poles. The armature revolves at 2,000 r.p.m., hence there are $33\frac{1}{3}$ revolutions per second which, multiplied by 30 (the number of field

poles), gives 1000 alternations of current per second. Since two alternations of current constitutes a cycle, the frequency of this generator is 500 cycles per second. The motor of this machine takes 29 amperes at a pressure of 110 volts d-c., but the generator armature delivers alternating current at pressures varying between 120 and 380 volts, with current output of 20.8 amperes. At normal saturation the generator and the motor fields require about $2\frac{1}{2}$ amperes each. The complete motor, therefore, is rated at $\frac{29 \times 110}{746} = 4.2$ horsepower.

Details of the $\frac{1}{2}$-kw. 500-cycle Crocker-Wheeler motor-generator are shown in Fig. 41. It is to be noted that the rotor of the generator is

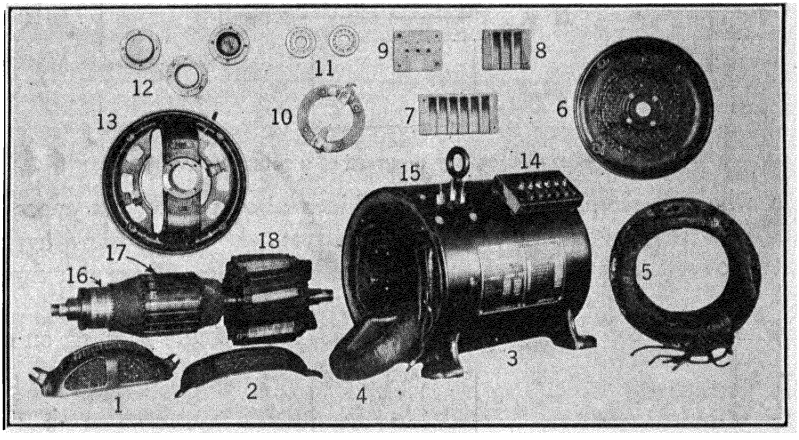

FIG. 42.—Disassembled Holtzer-Cabot 2-k.w. motor-generator.

composed of two toothed disks without windings, and that both the field and armature windings are stationary. The rotor closes and opens the magnetic circuit between the armature and field windings and thereby induces current in the armature.

The Holtzer-Cabot 2-kw. motor-generator is shown in detail in Fig. 42. The numbered parts are:

1 and 2. Screen covers for motor end.
3. Motor-generator casing.
4. Motor field coil.
5. Generator armature and field.
6. Generator end plate.
7. Generator terminal block cover.
8. Motor terminal block cover.
9. Motor terminal block detached.
10. Brush holder complete.
11. Ball bearings, both ends of machine.
12. End plates for ball bearings.
13. Motor end plate.
14. Generator terminal block.
15. Motor terminals showing lugs removed from terminal block.
16. Commutator.
17. Motor armature.
18. Generator laminated iron rotor.

Dynamotor and Rotary Converter.—The dynamotor and the rotary converter are employed occasionally to generate alternating voltage from a d-c. source of supply. The distinguishing feature of these machines is the use of a single armature for both a-c. and d-c. Hence, but two bearings are required, and the construction of the machine

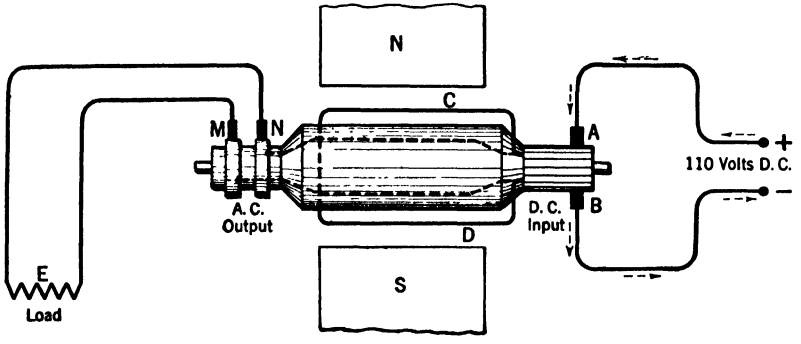

FIG. 43.—An elementary diagram of a rotary converter.

as a whole is simplified. These machines also require less space to erect, but they possess the marked disadvantage of not allowing full control over the voltage. Also, they are not as efficient as the motor generator when connected to a radio transmitter.

The rotary converter, shown in Fig. 43, has a single winding on one

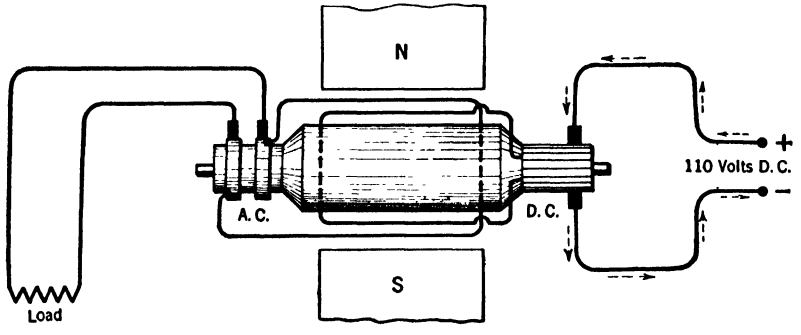

FIG. 44.—An elementary diagram of a dynamotor. In commercial practice the dynamotor is often employed in d.-c. circuits to step-up d.-c. voltage. The machine is then usually equipped with two commutators.

armature for both alternating and direct current, but the dynamotor of Fig. 44 has two distinct windings (on the same armature), one to rotate it as a motor, and the other for the production of alternating current.

Explanation of the circuits of the rotary converter of Fig. 43 follows: Direct current from an external source enters the armature coil *CD* through brushes *A B*, and also flows to the shunt field windings (not

shown), causing the armature to revolve in the usual way. Taps taken from this winding at the commutator segments directly underneath the brushes are connected to the collector rings on the opposite ends of the shaft, the circuit continuing through brushes *MN* to the a-c. external load circuit *E*. The voltage of the alternating current is maximum when the taps to the collector rings are underneath the brushes, and minimum when midway between the brushes. It is easily seen that as *CD* revolves and attains the position opposite to that in Fig. 43, the current taken from the collector rings will flow in the opposite direction. As the armature revolves, an alternating current can be taken from the armature, the frequency varying with the speed. An important point in connection with this machine is that if the d-c. supply is 110 volts, the effective a-c. voltage cannot exceed 77 volts. If 110 volts is desired a small step-up transformer must be used.

The a-c. voltage of the converter may be increased by raising the speed of the motor, but the frequency of the current increases simultaneously. The converter does not permit the closeness of control of the voltage and the frequency that is given by the motor-generator; therefore, it operates at a disadvantage.

The circuit of the dynamotor is shown in Fig. 44. Here the armature coils for the production of alternating current have no connection with the coils for direct current. The two windings are mounted on the same core, but in separate slots. The generator winding can be given the correct number of turns so that a certain output voltage may be obtained when the armature is connected to 110 volts d-c. The armature coils are shown externally for simplicity.

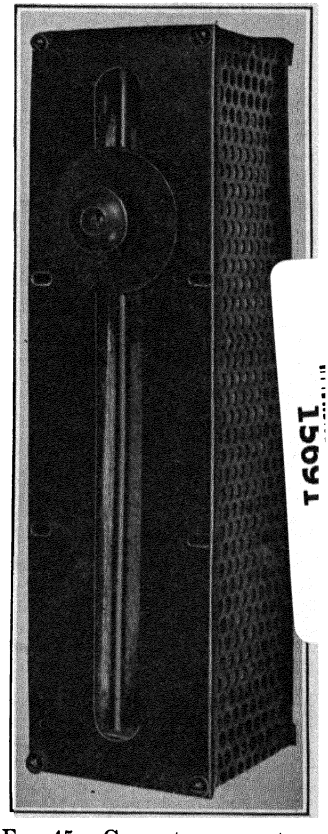

FIG. 45.—Generator or motor field rheostat.

Field Rheostats.—A type of field rheostat supplied with motor-generators is shown in Fig. 45. This type has a number of turns of bare resistance wire wound on a slate base. A sliding contact moving over the turns permits very close regulation of the flow of current in the field winding. A rheostat of this type is essential for motor-generators

used with transmitters, because they require extremely close regulation of the generator voltage.

The Motor Starter.—It has been previously mentioned that the counter e.m.f. of a motor armature is very low upon starting. If the terminals of a motor are connected directly to the source of e.m.f., an excessive current may flow that might injure the commutator or burn out the armature windings (unless the circuit is properly fused). A motor starter is required to reduce the starting current to a safe value.

A diagram of the Cutler-Hammer hand starter is shown in Fig. 46. The principal elements of the starter are the resistance coils R_1, the small holding magnet M and the handle H. The coils of R_1 are of German silver wire or composition wire, tapped at certain intervals and connected to the studs 1, 2, 3, 4, 5, 6 and 7. The circuit from the

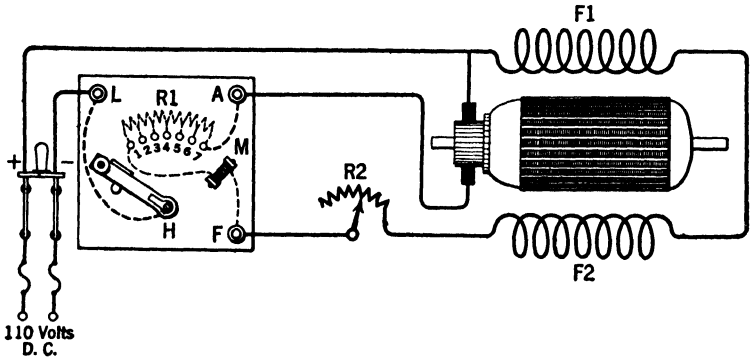

FIG. 46.—Cutler-Hammer hand starter connected to a shunt wound motor.

negative side of the d-c. power line may be traced to the L post of the starter through the handle H, which, when placed on the first point of contact, permits the current to flow through all coils of R_1 to the terminal A, thence to a brush on the commutator. The circuit continues through the armature to the second brush and to the positive side of the line. One terminal of the field winding, F_1, receives current at the positive side of the line at one brush, but the other terminal, F_2, has the field rheostat R_2 connected in series, also the holding magnet M; moreover, this circuit continues to the first tap on the resistance coils R_1. Now, as the handle is moved slowly across the contact studs on the starter, current is admitted to the motor armature by small increments which set it into rotation, while the speed gradually increases as the handle moves toward the final or full running position. When this position is attained, the magnet M grips the handle and holds it in position until it is released by opening the main d-c. line switch. The

diagram shows the Cutler-Hammer starter connected to a shunt-wound motor.

It is important that a motor be started neither too rapidly nor too slowly. If the former condition obtains, the fuses in series with the line to the motor armature will melt; but if the starting handle is moved too slowly across the contact studs, the internal resistance coils will overheat and perhaps burn out. The speed of acceleration of the starting handle can usually be gauged by observing the speed of the motor armature. It should require no more than 15 seconds to start the motors used in connection with radio telegraph apparatus.

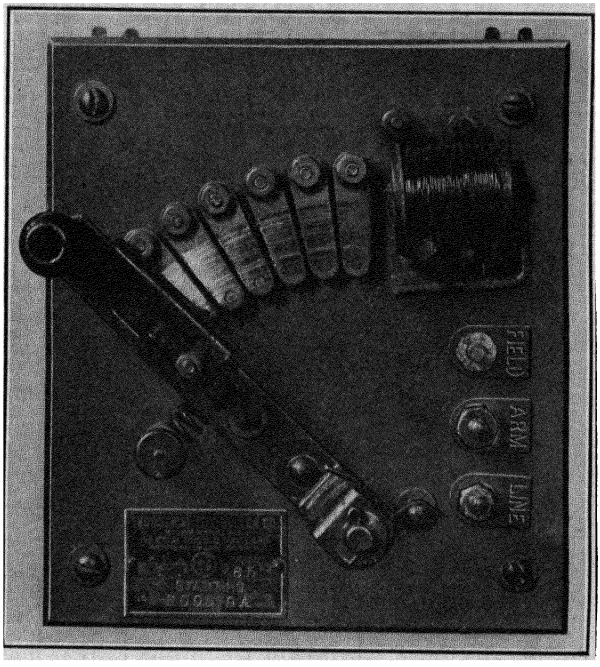

FIG. 46*a*.—Hand starter.

The release magnet M, Fig. 46, serves to protect the motor in case the main line circuit is disconnected, or should the motor field windings of the circuit be broken by accident. In either event the handle H flies back to the starting position by the tension of a spring attached to the bearing of the handle, and thus interrupts the circuit to the armature. A front view of a hand starter is shown in Fig. 46*a*.

The General Electric Company's hand starter differs slightly from the type just described. A complete diagram is shown in Fig. 47, where the starter is connected to a simple shunt-wound motor. It is to be noted in this diagram that the release magnet M is shunted across the d-c. line, and has a coil of fixed protective resistance R_1 connected in series. If the source of power is cut off, magnet M releases the handle of the starter, whereupon it returns to the zero position, breaking the circuit to the armature.

Automatic Motor Starters.—It is often essential to install a motor

generator at a point remote from the radio cabin, in order that the noise from its operation may not interfere with the reception of radio signals. In instances of this kind, automatic motor starters, controlled from a distant point by pressing a small button or closing a small switch, are employed. Such starters possess the advantage that the

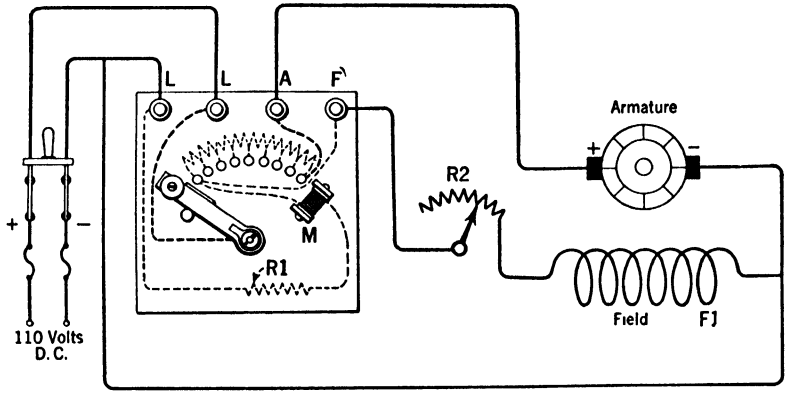

FIG. 47.—General Electric hand starter connected to a shunt wound d-c. motor.

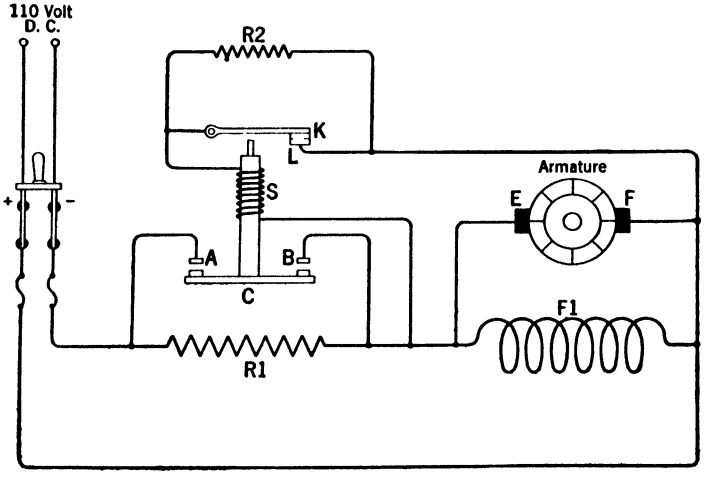

FIG. 48.—A fundamental diagram of a counter e.m.f. starter connected to a shunt-wound d-c. motor.

acceleration of the starting handle is uniform, and consequently there is no danger of burning out the armature or melting the fuses during the starting of a motor.

The complete circuit of a counter e.m.f. single-step automatic starter is shown in the diagram of Fig. 48. A single resistance unit R_1 is con-

nected in series with the brushes E and F of the armature. When the main d-c. line switch is closed, the solenoid winding S connected in shunt to the motor armature through contacts K and L draws up the plunger C, which in turn shunts the coil R_1 through the contacts A and B. Current flows to the motor armature through R_1, and as the counter e.m.f. of the armature increases, the solenoid winding becomes more strongly magnetized, drawing up the plunger, which cuts out the resistance coil R_1. When the plunger of the solenoid is in the full running position, contacts K and L are forcibly opened and the resistance unit R_2 is connected in series with the solenoid winding S. This is to prevent the magnet winding from overheating and consequent injury.

The circuit of an automatic starter employed in $\frac{1}{2}$-kw. 500-cycle

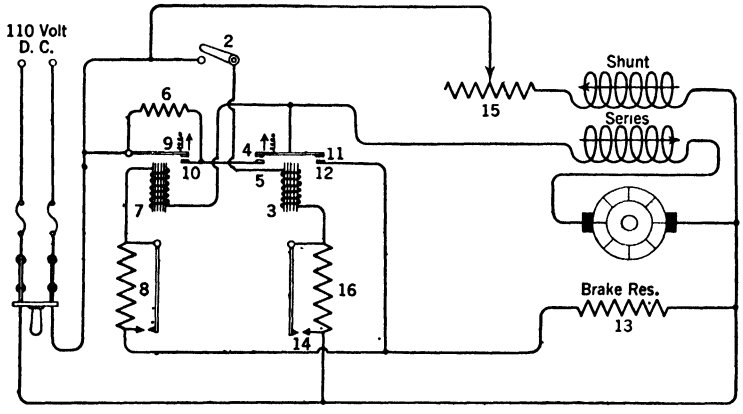

FIG. 49.—Automatic starter connected to a compound-wound motor.

transmitting sets is shown in Fig. 49. When the starting switch 2 is closed, the solenoid 3 is connected in shunt to the d-c. line through contacts 14. The flux from this solenoid attracts the lever 4, making contact with point 5, thereby closing the circuit from the d-c. line through the series field and to the motor armature through the resistance coil 6. Simultaneously the solenoid 7 is connected in shunt to the d-c. line (through the lever 4) which attracts the lever 9, making contact with point 10; this shorts resistance 6 out of the armature circuit, whereupon the motor is connected directly to the main d-c. line. It is apparent that the lever 4 of solenoid 3 opens and closes the main power circuit, while the lever 9 of solenoid 7 cuts out the resistance 6 in series with the motor armature. The solenoids 3 and 7 have the resistance coils 16 and 8 respectively, which are connected in series with their

respective windings automatically by the levers 4 and 9. These resistances prevent the solenoid windings from overheating.

The automatic starter also includes the elements of an electrodynamic brake. When the starting switch 2 is open, lever 4 drops back, also lever 9, followed by contact being made between points 11 and 12 connecting the resistance coil 13 in shunt to the motor armature and the series winding. The motor armature thus temporarily becomes a generator and, owing to the power expended in setting up a current through the resistance 13, a powerful braking action is set up against the armature, bringing it to a quick stop. The resistance coil 15 is the motor field rheostat, by which the speed of the motor can be regulated between certain limits.

The starting switch 2 is usually one of the snap type placed conveniently for the radio operator and near the aerial changeover switch. In some installations the starting circuit opens and closes through this switch, stopping the motor whenever the aerial switch is in the "receiving" position. In case it becomes necessary to install the motor generator in the operating room, it is essential that the motor stop immediately after the sending period, to permit the reply from a distant radio station to be deciphered without interference.

The circuit of an automatic starter supplied with 2-kw. 500-cycle transmitting sets is shown in Fig. 50. In addition to acting as a motor starter, it performs the function of a main-line circuit-breaker through the medium of an overload relay switch. The starter has three resistance units connected in series with the motor armature instead of the single resistance unit described in the two previous types.

It will be observed in the drawing that the field winding 70 of the motor is connected in shunt with the d-c. line through the regulating field rheostat 23. As resistance is increased at 23, the speed of the motor increases, and, consequently, the frequency of the alternator also increases. The generator field winding 71 is connected in shunt to the d-c. line through the low-power resistance 24 and the voltage regulating rheostat 25. The field circuit continues to the contacts of the antenna switch 62 and 63 through the control switch 26 and finally to contact 5 of the automatic starter. By this connection the circuit to the generator field winding remains open until the bar 6 attached to the plunger *A* of the automatic starter has touched point 5. When the bar of the automatic starter makes contact with point 4, the d-c. armature is connected directly to the main d-c. line.

By increase of resistance at the rheostat 25, the voltage of the a-c. generator drops, and conversely increases by the reduction of resistance. Low values of voltage may be secured at the terminals of the generator

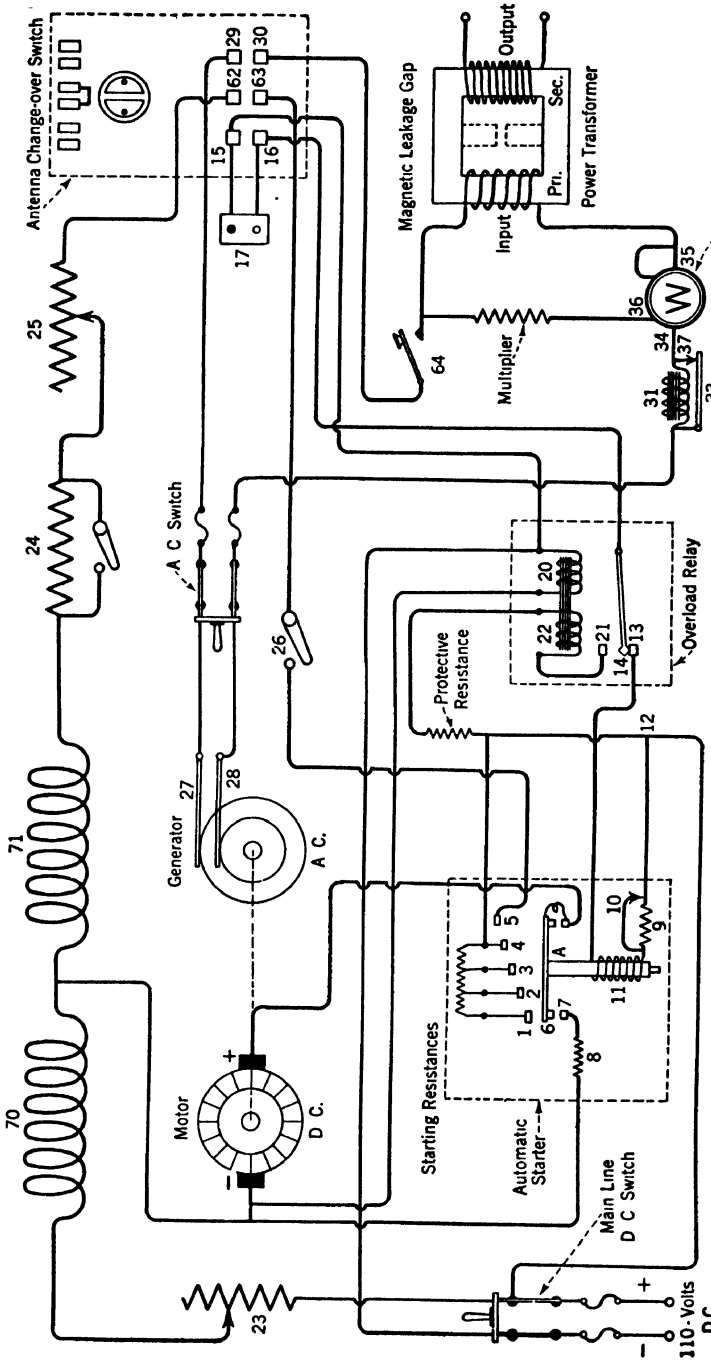

FIG. 50.—Illustrating the "finger" type automatic starter connected in the power circuit of a spark transmitter. Refer to the drawing on page 94 concerning the use of protective condensers.

by an external fixed resistance 24 connected in series with the generator rheostat. This is shunted by the switch indicated in the drawing.

The overload relay employed in conjunction with the automatic starter has the magnet winding 20, which may be called the " tripping magnet," and the second magnet winding 22, which may be called the "holding magnet." Winding 20 is in series with the d-c. armature on the negative side of the line. If more than a predetermined number of amperes flow through this winding, the lever 14 is drawn up, breaking the circuit of the solenoid winding 11 through the contacts 13 and 14. Immediately afterward the circuit through winding 22 is closed through contacts 14 and 21. This causes the lever 14 to be held in the "up" position until either the main d-c. line switch or the starting switch 17 is opened.

One terminal of the solenoid winding 11 is connected to the positive pole of the d-c. line at point 12. The circuit is completed through the fixed resistance 9, shunted by the switch 10, through the contacts 13 and 14 of the overload relay, and through contacts 15 and 16 of the antenna switch, to a terminal of the winding 20, which is of negative polarity. Hence, it is readily observed that the solenoid winding is connected in shunt to the d-c. line when either of the contacts 15 or 16 or the starting switch 17 is closed.

The switch 10 in shunt to the resistance 9 is automatically opened by the plunger *A* of the automatic starter when it is in the full vertical or running position.

The resistance coils of the motor starter, connected in series with the d-c. line to the armature, are progressively cut out of the circuit at contacts 1, 2, 3, and 4 by the bar 6. When the circuit to the solenoid 11 is closed, the plunger *A* with the bar 6 moves in a vertical position. The acceleration is regulated by a piston drawn through a vacuum chamber (dash pot). When contact is made between the bar 6 and point 1, the circuit to the armature includes the entire set of resistance coils.

When the circuit to the winding 11 is interurpted, either at point 17 or at the aerial switch contacts 15 and 16, the plunger *A* drops downward, and through the medium of contacts 6 and 7 the resistance coil 8 is connected in shunt with the d-c. armature. At this stage of operations the momentum of the armature causes it to become temporarily a d-c. generator and current of large value flows for a few moments through the resistance 8. The magnetic field thus set up by the armature causes a powerful dragging action on the field poles that brings the armature to a quick stop.

Reviewing the foregoing: When the handle of the aerial changeover

switch is thrown to the transmitting position, the motor-generator is automatically started, provided the main d-c. line switch is closed. It will be brought to a quick stop when the antenna switch is placed in the receiving position, provided the switch 17 remains open. If the switch 17 is closed, the motor-generator can be kept in a continuous state of operation during the receiving period.

The speed of accelleration of the starter arm can be very closely regulated by an adjusting screw attached to the bottom of the vacuum chamber. It usually requires 12 seconds to bring the starter up to the full running position.

When it becomes necessary to make repairs or adjustments to the generator, or the a-c. power circuits, the generator field switch 26

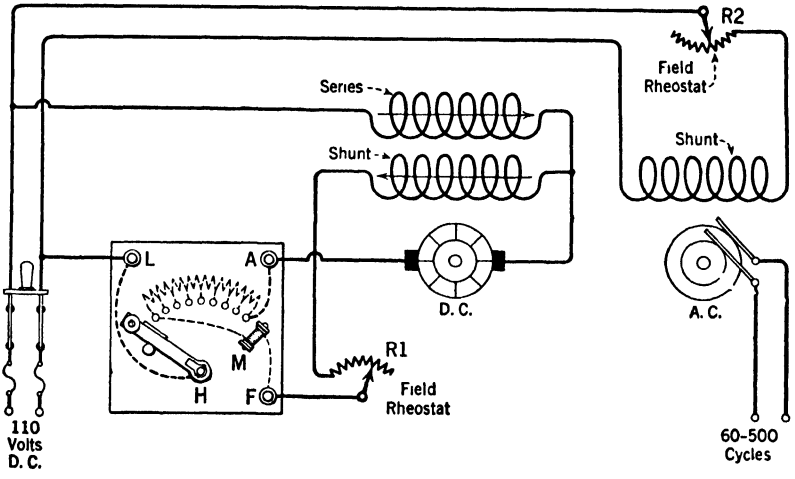

FIG. 51.—Diagram of a hand starter and compound wound d-c. motor coupled to an a-c. generator.

should be open. When the motor-generator is to remain idle for an indefinite period, the main d-c. line switch should be opened to break the circuit to the field winding of the motor.

In Fig. 51 is shown the complete circuit of a differentially wound motor coupled to an alternating current generator, including the connection of the field rheostats and the hand starter.

Protective Condensers.—When a radio transmitter is in operation, a powerful electrostatic field is set up in the region about the aerial wires. If the power apparatus is installed in such a manner that the low voltage wires leading to the motor-generator or other apparatus lie parallel or in proximity to the antenna wires, currents of very

high potential will be induced in the power wires which may puncture the insulation. A path is then afforded for the current which may cause an arc, completely short-circuiting the windings of a motor-generator. In other words, this induction sets up a difference of potential between the various windings, or between the windings and the frame of a motor-generator, which may result in a disastrous burnout. The low voltage wires can be well protected by installing them in an iron conduit, the latter in turn being thoroughly connected to the earth. The induced currents will flow on the surface of the pipe and be neutralized by the earth connection, thus doing no harm to the power wiring. The power wires of commercial radio installations are either installed in an iron conduit or in lead-covered cables, but, in addition to this protection, protective devices known as protective condensers, or protective resistances, are employed.

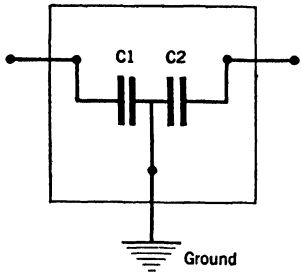

FIG. 52.—Protective device for motor-generator windings.

Protective condenser units consist of two 0.5 microfarad condensers each connected in series, mounted on an insulating support as in Fig. 52. The middle connection is extended to the earth, while the remaining terminals are connected across the field, across armature windings of a motor-generator, or between these windings and the frame. Differences of potential that may be induced in such windings are neutralized and reduced to zero through the earth connection.

Carbon or graphite rods of high resistance are often employed for protective purposes. A single graphite rod having a resistance of about 5000 ohms is mounted on an insulating support and connected to earth at the middle point. The two remaining terminals are connected to the windings of the motor-generator to be protected. These rods have sufficient resistance to prevent appreciable leakage of the low voltage current but possess sufficient conductivity to pass the induced current of high voltage.

Protective rods or protective condensers are connected:

(1) In shunt to the motor armature.
(2) In shunt to the generator armature.
(3) In shunt to the field windings of the motor.
(4) In shunt to the field windings of the generator.

Fig. 53 shows the principle of how protective condensers may be attached to a motor-generator. Condensers *A*, *B*, *C* and *D* are of

0.5 or 1 microfarad capacity each. One terminal is connected to a binding post and the other terminal to the frame of the motor-generator. The frame of the motor-generator is connected to the earth at the binding post, or at any other convenient point. These condensers are generally mounted in a containing rack on the top of the motor-generator and protected from injury by a cast-iron case.

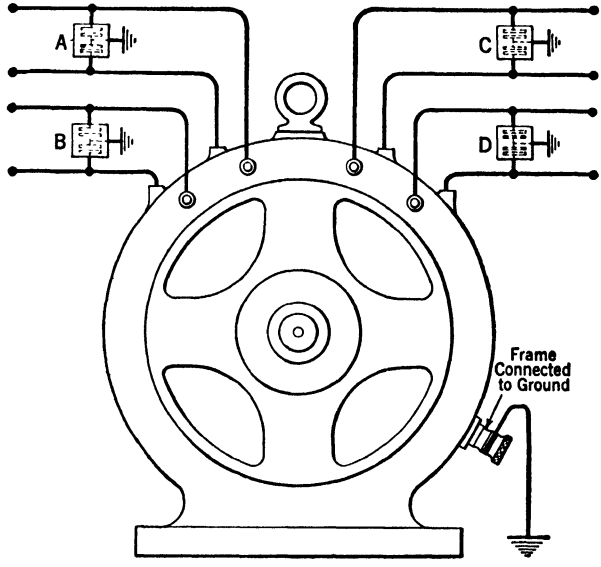

FIG. 53.—Illustrating the principle of connecting protective devices across the windings of a motor-generator.

In some radio systems, fuses are connected in series with the protective condensers to protect the power mains in case of puncture of the dielectric.

Care of the Motor-Generator.—To become familiar with a motor-generator of any type, students should note particularly how the brushes are held in the rocker arm and how the connections are attached to and between the various brush holders. They should also note the connections inside the frame, from the motor to the generator. Particular observance should be made of the thrust bearing mounted on the end of the shaft to take up the "end play." In the case of the 2-kw. 500-cycle motor-generator, the method of attaching the rotary spark gap to the end of the generator shaft should be carefully gone over.

Proper care of the motor-generator is assured if the following general rules are observed:

(1) Keep motor brushes clean and free from copper dust. Use sandpaper only; avoid emery cloth.
(2) Clean commutator occasionally with a fine grade of sandpaper.
(3) Oil bearings frequently. Open petcocks occasionally to assure that oil container has the necessary supply.

(4) Make sure that all petcock valves are tight, so that they will not loosen by vibration.

(5) Wipe off frame of motor-generator, brush holders and rocker arm occasionally, to prevent accumulation of carbon dust and grease.

(6) Do not overspeed motor. Normal speed can be observed by the reading of the frequency meter or by applying a speed indicator to the end of the motor-generator shaft. Observe either wattmeter or ammeter occasionally, to insure that the normal load of the generator is not exceeded.

(7) When removing armature from motor-generator, it is usually more convenient to take off the generator end plate.

(8) Be careful not to injure commutator by scraping against the field poles.

(9) See that protective condensers are at all times properly connected.

(10) Punctured condensers should be removed or disconnected from the circuits.

(11) In the case of the 2-kw. 500-cycle motor-generator, adjust overload relay for 35 amperes.

(12) If a single resistance coil in either the hand starter or the automatic starter burns out, close the circuit by placing a jumper around the burned-out portion.

(13) If field rheostat burns out, close the circuit by a jumper. If burned beyond repair, substitute three or four 16-candle-power carbon filament lamps, connected in parallel.

(14) Tighten up all connections frequently. These should be gone over once a month.

Lubrication.—See that the oil rings are free, and that the drain cock under the bearing is closed. Fill the bearing from the top with a good grade of machine oil until it just begins to flow out under the shaft. The oil should not contain fibrous material. It also should test free from acid or alkali and must withstand a temperature of 100° C. or higher without any material change in its consistency when cold. After operating for about a month, the bearing should be drained, flushed out with kerosene and filled with fresh oil. Be sure that no foreign material enters the bearing. After this, they should not need cleaning more often than about once every six months. However, they should be examined frequently and kept full of oil, since the rolling of

the ship may cause the oil to leak out. If the hand can be placed against the bearing housings for a second or more without causing discomfort, the bearing is not overheated.

Cleanliness.—Great care should be taken to keep grease, gasoline, kerosene, or oil from the electrical parts of the machine. It is very important that all foreign matter except the oil be excluded from the bearings. This means that care must be taken to see that no dirt or grit of any kind is carried into the bearing with the new oil, or otherwise, when, for any reason, the bearing caps are removed.

To Replace a Bearing.—Remove the end shield, being sure to lift the oil ring so it will not bind. Unscrew the end play nut. Take out the bearing screw and drive the bearing through the outside of the end shield, using a block of wood to prevent scoring the bearing. Then lay the end shield face down with a solid bearing on the inside. Put in a new oil ring if necessary, placing it so as to clear the new bearing when it is driven in. Insert the bearing with the bearing screw ahead of the oil slot and drive it just far enough to allow the oil ring to ride in the oil slot. Replace the end shield and set the rocker arm, if on the d-c. end, as indicated before anchoring it.

To Adjust for End Play.—Operate the machine with full current in the field and move the bearings by means of the large end play adjusting nuts until there is $\frac{1}{64}$-inch end play at both ends. Tighten with the set screw.

To Replace a Rotating Element.—First remove the end shields and bearings as above. Place the bearings on the new shaft and place the shaft in the frame of the machine. Then put on the end shield and replace the brushes and connections, taking care to get them together the same as they were before taking the machine apart.

To Replace a Generator Armature Coil.—First, remove the rotating element as before. Disconnect and remove the defective coil and replace with a new coil and slot insulation. It will be observed that the inside of the coil tapers slightly and should be placed so that the big end of the coil is in the bottom of the slot. Connect the coil, taking care to make the connections the same as they were originally. Replace the slot key, solder the connections securely, insulate with two layers of $\frac{1}{4}$-inch linen tape, paint with insulating varnish, and assemble the machine as before.

To Remove a Generator Field Coil.—It will be necessary first to remove the outer set of armature coils and core as a unit. This can be done by removing the bolts which hold it to the frame. All leads must be disconnected from the terminal blocks before this can be done. The field coil is ring-shaped and can be slid out easily.

To Replace a Motor Field Coil.—Remove the rotating element as before. Remove the pole shoe by loosening its holding-down screws. Disconnect the defective coil to replace with a new one, putting the long lead next to the frame. Replace the pole shoe, taking care to get it in the original position. Solder the connections to the coil and replace the rotating element as before.

To Replace a Motor Armature Coil.—This is a more difficult process. When it becomes necessary, the damaged armature should be replaced by a spare and repaired later. After the damaged armature coil is located, unsolder its leads from the commutator risers, and also those of all the coils which have one of their sides in the slots included between the sides of the damaged coil. Remove all the wedges from the slots in which the damaged coil lies and from those between, and lift out the coil-sides. This is necessary because the coils overlap all the way around the armature. When the coil is removed, put a new one in by the reverse process, taking care to get it in the proper relation to the others without injuring the insulation of any of them. When soldering the leads to the commutator risers, be careful to make good tight joints, otherwise injurious sparking will result.

To Replace a Motor Brush.—First remove the old one by disconnecting the pigtail and pulling back the pressure arm. Insert the new brush and trim it to fit the commutator by pulling a piece of No. 00 sandpaper or crocus cloth between the brush and commutator. Never use emery cloth.

To Replace a Motor-Brush Holder.—The old brush is taken out of the holder by removing the nuts on the brush stud and the connections, and by unfastening the holder stud from the insulating bridge. In replacing the new holder, there should be a clearance of about $\frac{1}{8}$-in. between the holder and the commutator. Before tightening nuts and making connections, be sure that the new holder inclines at the same angle as its neighbor.

To Replace a Brush Holder Spring.—Remove the holder and stud as above. The pin through the spring drum can be removed by using a small punch and hammer. After inserting a new spring and pin, rivet the latter with the punch. Replace the parts as above.

How to Remove Motor-Generator Armature.—In case it becomes necessary to remove the armature of the 2-kw. 500-cycle motor-generator for the purpose of repairs, it is necessary first to remove the casing of the rotary spark gap. Follow this by taking out the wedge-shaped key in the end of the generator shaft. If the rotary disk is given a slight tap with the hammer, the key will be released and the disk may be removed from the shaft. After this, the bearing bracket can

be removed from the generator end. The brushes should then be removed from the commutator and the collector rings. After these operations, the armature can be pulled out and a new one inserted, if necessary. When the armature is replaced, the oil rings should be held up to permit the shaft to pass through the bearings. Care should be taken to see that the oil rings are working properly and that the bearings are thoroughly oiled for the initial test. Before starting the motor-generator, careful inspection should be made to see that all parts are properly secured and in working order.

It should be noted that the mica of the commutator of this machine is undercut about $\frac{1}{32}$ in., and before it gets flush with the commutator bars the mica should be cut out again.

Water Rheostat.—In the case of a total breakdown or burn-out of a rheostat it is possible to supply a somewhat satisfactory substitute until permanent repairs can be made.

Procure a watertight wooden tub of convenient size in order that the water will not spill over, due to any movement or lurching of the vessel. Insert in the tub two metal pipes, placed diametrically opposite and tied in position securely by a piece of rope or other insulating material, to prevent the pipes from accidentally touching each other. The pipes should not touch the bottom of the tub. If pipes are unavailable, any fairly large metal pieces will do. Now attach in some suitable way each connecting wire from the circuit respectively to a pipe. Next close the switch controlling the circuit. Of course the break between the two pipes will prevent the circuit from functioning. Now begin to add ordinary water slowly, perhaps a quart at a time, and watch developments. If after adding sufficient water to the safety level, to prevent spilling, the water does not then pass the required current, begin to add ordinary salt in small quantities. It will be noticed that the resistance of the water is lowered as salt is added and the current through the liquid will increase. It is advisable to stop adding salt at frequent intervals to allow that already in the water to dissolve properly. Oftentimes, in haste, one will add salt enough to set the circuit in operation, but as the salt dissolves and the water becomes a better conductor, its resistance may then be too low and allow too much current to flow.

It is known that the resistance can be controlled by moving one of the pipes a certain distance either in or out of the water in order to change the amount of contact area between the electrode and the liquid or solution. The unassuming pipes are now called "electrodes." Great care must be exercised when this method is used, for the movable electrode must be attached to a rope and pulley and not be

allowed under any circumstances to touch or come into contact with any conducting material outside of the tub. As an additional suggestion be sure that, if an iron hoop or ring is used at the top to hold the barrel staves, there is no nail driven in and cleated on the inside of the staves making contact with the pipes inside, thus forming a metallic connection through the ring between the electrodes.

Armatures.—Armatures are usually classified with particular reference to their shape; the two principal types are known as "lap-wound" and "drum-wound" armatures. It is difficult to illustrate the scheme for any particular type of winding showing the coils as they might actually appear when laid along the armature with the coil ends connecting to different copper segments. In detail, the subject of armature windings

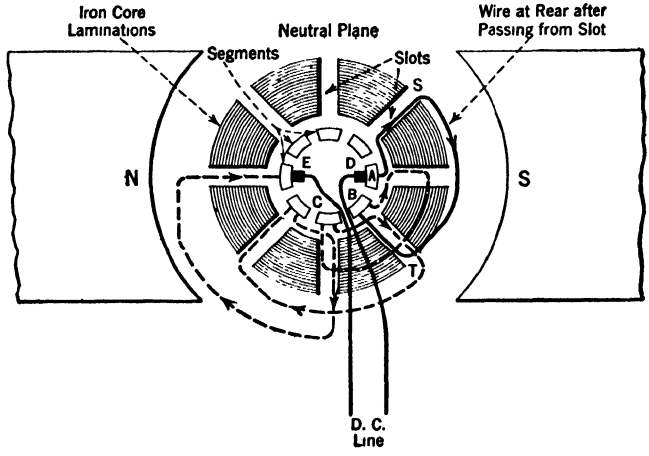

FIG. 54.—Illustrating the general method of constructing a lap-wound armature. The armature is spread out in the shape of a fan or star to clarify the illustration.

is too comprehensive to be treated in this text, and for the purpose intended the two common types only will be discussed.

Lap-Wound Armatures.—Because the lap-wound type is most generally used in direct current machinery, the principle of this method is shown in Fig. 54. The heavy line *S* represents one armature groove with the wire laid lengthwise through it, and slot *T* is the groove through which this particular wire will run after first passing through *S*, and continuing around at the rear of the armature. It is readily apparent from the drawing that each coil begins at a copper segment, and after passing through a slot, then around the rear of the armature, returns through another slot, and is finally connected to the segment adjacent to the first one. The coil referred to above, running in grooves *S* and

T, has a beginning at segment A and ends at segment B. Notice that brush D is resting on segment A, forming an electrical connection to the external circuit, and also that each segment is the beginning of one coil and the ending for some other coil; hence, all coils on the armature are electrically connected and in a series arrangement. There are as many brushes as there are field poles, providing sufficient paths for the current to flow to the coils in the case of a motor armature, or allowing the induced currents to flow from the armature coils to the load circuit in the case of the d-c. generator. Two wires are always soldered to one segment, but usually only the one going to the segment at the top can actually be seen. The coils are wound with several turns through the slots before returning to the proper segments.

The dotted lines represent other coils and clearly show that the coils form a closed loop or continuous circuit from one brush to the other, as will be seen when tracing the coil circuit from brush D, through slot S, thence to brush B. The continuity is now finished by following the dotted lines from B to segment C, as indicated by the arrows, and so on, finally ending at brush E, thus completing the path of the current to or from the line, as the case may be. The diagram shows the entire lower half of the coil system, the upper half (not shown) being completed in a similar way.

The number of turns and the size of the wire is dependent upon the electrical characteristics of the machine. It is needless to say that the wire must be well insulated from the iron core and wound in the grooves very carefully in order that the turns will not move or shift because of the high centrifugal force developed at high speeds, which has the tendency to throw the coils outward.

The direction of the induced e.m.f. in the generator armature may be found by applying the " right-hand " rule and the direction of rotation of the armature in the case of the motor may be determined by the "left-hand" rule. The two brushes in the diagram are shown in a position " within " the group of segments, this being done to simplify the drawing. The brushes actually rest on the periphery of the segments or commutator. Also, the armature in a practical machine will consist of many coils and segments.

Drum-Wound Armature.—The general outline of the drum-wound armature is shown in Fig. 55. The core of this type is made up of a number of thin sheets of soft iron mounted on the shafts to form the support for the armature coils. The coils for the armature are placed lengthwise in slots, one coil being shown as at AB. One terminal, AB, is connected to a segment of the commutator, and the winding continues through a slot to the rear of the armature core underneath a south

pole, and returns, in the case of a four-pole generator or motor, about 90 deg. away or underneath the north pole, where the second terminal is attached to the next adjacent commutator segment. Several of these coils are connected in series, taps being brought from the terminals of each coil to the successive segments of the commutator. The iron punchings of the core *H* are insulated from one another by shellac or varnish to prevent the induction of current in the core as well as in the armature coils. A solid core would occasion great energy losses in this way. (See "Eddy Currents.")

Lamination.—An armature core constructed of thin disks or punchings is said to be laminated.

The "Right-Hand" and "Left-Hand" Rule.—To find the direction of the induced e.m.f. in the generator armature conductor the

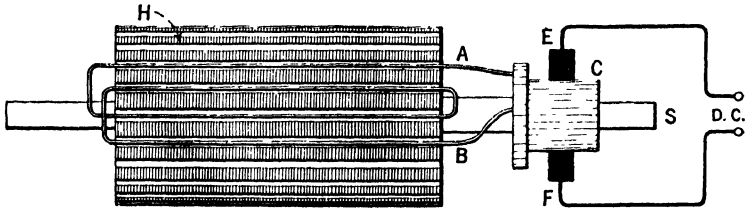

FIG. 55.—Drum-wound armature.

"right-hand" rule is applied as follows: Holding the first three fingers of the right hand at right angles to one another,

Point the thumb in the direction of armature rotation.
Point the forefinger in the direction of the magnetic lines of force between the field poles.
The middle finger will now indicate the direction of the induced current in one inductor.

To find the direction of rotation of a d-c. motor the "left-hand" rule is applied: Holding the first three fingers of the left hand at right angles to one another,

Point the forefinger in the direction of the lines of force between the field poles.
Point the middle finger in the direction of current flow through any single inductor (meaning one or more wires which constitute half of one complete coil laid in the same slot or groove.)
The thumb will indicate the direction of motion, whether clockwise or counter-clockwise. (Refer to Fig. 32*a*.)

After determining the direction of current flow through one in-

ductor, or one wire of a complete coil, the direction of flow through the entire coil is easily found by tracing out the continuity through the entire coil to the brushes and finally ending at the external circuit.

Eddy Currents.—If a copper disk, or other conducting metal, is rotated under a magnet, as illustrated in Fig. 56, currents will be produced in the disk which flow in paths as shown by the dotted lines. If the magnet is not held in position it will rotate in the same direction as the disk. The current in that part of the disk moving toward the magnet pole will be in such a direction that a magnetic field is set up of the same polarity as the pole approached. It therefore has a tendency to repel the magnet, while the current in the receding part of the disk will be in such a direction as to produce a field of the opposite polarity and attract the magnet. The result of both actions, as can be readily assumed, tends to incite the magnet in the same direction and to cause its rotation.

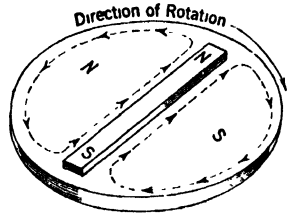

FIG. 56.—Showing how eddy currents are produced.

Currents induced in masses of metal that are moved in a magnetic field, or cut by a moving magnetic field, are known as "eddy currents." These currents circulating in solid conductors are converted into heat and are the main source of a great loss of energy in motors, generators and transformers. So that they may be minimized, solid conductors such as the iron core of a generator armature or transformer, are constructed of laminations, the planes of which are parallel to the lines of force of the field. The thinner the lamination the less will be the loss from eddy currents.

CHAPTER VI

CURVE DIAGRAMS

CURVE diagrams have been occasionally mentioned in the elementary instruction in preceding pages to illustrate various results, but before more advanced discussions are brought forth, a few words concerning their meaning will be given for those students who may not be familiar with their use.

Principle of Curve Diagrams.—The first principle underlying all curve diagrams is the representation of relative values by distance drawn to a predetermined scale. Thus, if it is determined beforehand that a definite distance shall represent a unit value of the particular factor to be considered, any value of that factor can be represented by a distance corresponding in scale to the value we wish to define. As an example, let it be supposed that a scale of $\frac{1}{4}$-inch = 1 gallon has been decided upon; 2 gal. can be represented by a distance of $\frac{1}{2}$ in., and, similarly, 10 gal. would be represented by a distance of $2\frac{1}{2}$ in. If we have a "time" scale, $\frac{1}{4}$ inch = 1 minute, a length of time of 4 minutes would be represented by 1 in., or a length of time of 1 hour by a distance of 15 in.

A curve diagram, therefore, may be described as a graphical illustration of the relationship of any two factors, when the value of one factor is dependent upon the value of the other. The illustration takes the form of "plotting" the curve on cross-section or graph paper, the squares of which are from $\frac{1}{16}$ in. to $\frac{1}{2}$ in. each way. Curve diagrams are valuable not only because they assist one to find the answer to a certain problem, but also because they show at a glance all the corresponding values of two factors and their relation to each other.

The Straight-Line Curve.—Assuming that an empty bucket is placed under a flowing water tap, it is apparent that the volume of water in the bucket will increase as long as water is flowing into it. In illustrating the amount of water which will flow in a certain length of time, as shown in Fig. 57, two varying factors bear a certain relation to each other, i.e., the number of gallons which have flowed, and the length of time in minutes the water is flowing.

Referring to Fig. 57, the distances along the horizontal axes, or "abscissas," represent the length of time during which the water has been flowing, and the distances along the vertical axes, or "ordinates," represent the number of gallons which have flowed. If a line is drawn, as shown in the diagram, connecting all these points together, it forms the "straight-line curve." By measuring the height of the ordinate at any instant, the curve readily indicates the amount of water which has flowed up to that instant. From the curve it will be seen that at the end of $3\frac{1}{2}$ min. 7 gal. have flowed, as located by the dot.

When the dimension of one factor is directly proportional to the

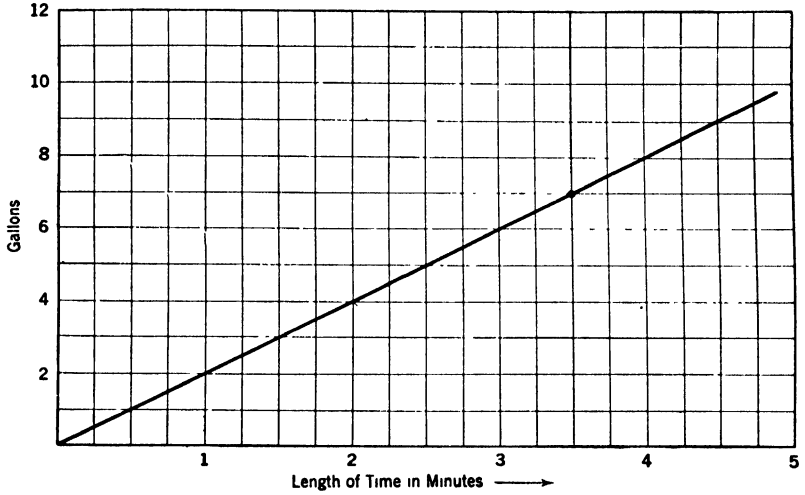

FIG. 57.—Straight-line curve—direct proportion.

dimension of another, the curve value representing their relationship takes the form of a straight line.

The Logarithmic Curve.—A good analogy for consideration in discussing the logarithmic curve is the flow of water from a full container, or tank, to an empty one through a connecting pipe. Neglecting the effect of the inertia of the water and the frictional resistance offered to the flow by the connecting pipe, the rate at which the water will flow from the one container to the other depends upon the difference of pressure, and this, in turn, is determined by the difference in the height or volume of water in the two containers.

Assuming that a small container is empty and a larger one full, it is logical to believe that, when the faucet in the pipe connecting the two containers is open, any flow in the water through the pipe causes an increase in the water level of the small container. This results in the

decrease of the pressure that causes the water to flow. The decrease continues as long as any water is flowing. It can readily be reasoned that the pressure will not decrease at a uniform rate, because the decrease in the pressure is due to the flow of water into the small container, hence, the rate at which the pressure decreases depends upon the rate at which the water flows. Since a decrease in the pressure causes a decrease in the flow of water, this, in turn, causes a decrease in rate at which the pressure falls, and also in the rate at which the flow of water decreases. The result is that the flow of water begins at a maximum when the faucet is first opened and decreases its flow, rapidly

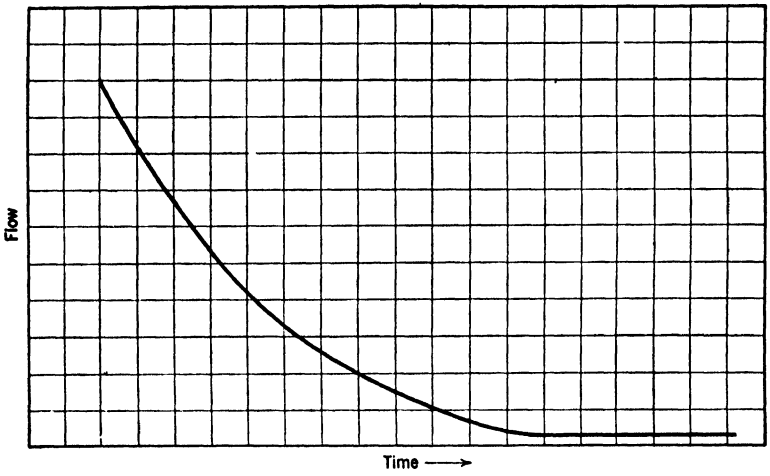

FIG. 58.—A logarithmic curve.

at first, and then more and more slowly as the water level of the small container approaches that of the large one.

A downward-sloping curve which represents a decrease in one factor with respect to another, and which is used to illustrate the example just discussed, is shown in Fig. 58. The steepness of the slope of the curve represents the rate of decrease. The curve representing the flow of water under the conditions described will slope downwards, beginning with a maximum steepness and continuing with a gradually decreasing slope until it almost, but never quite, reaches a definite minimum value.

The curve in Fig. 58 is known as a " logarithmic " curve and is often encountered in the study of radio communication.

As shown in Fig. 59, a logarithmic curve can be of an upward sloping nature, beginning with a minimum value and increasing rapidly upward at first, then more and more slowly until it almost, but never

quite, reaches a definite maximum limit. When an e.m.f. is applied across an inductance (coil) having resistance, the upward sloping logarithmic curve is used to represent the flow of current through the coil. As will be observed later, when the e.m.f.'s are applied to a

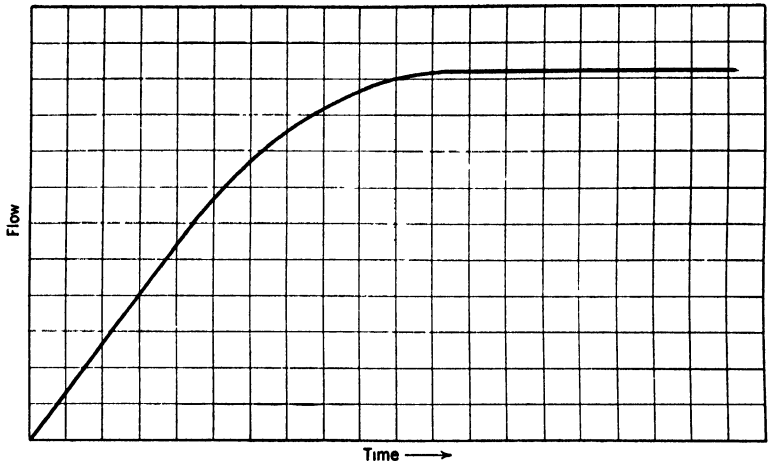

FIG. 59.—A logarithmic curve.

vacuum tube and the current flowing through the tube is plotted against the time of flow, the curve takes this form.

The Sine Curve.—In all cases of periodic motion the dimensions of the component factors as time elapses, such as the variation of current in an oscillatory circuit, can be illustrated by a sine curve.

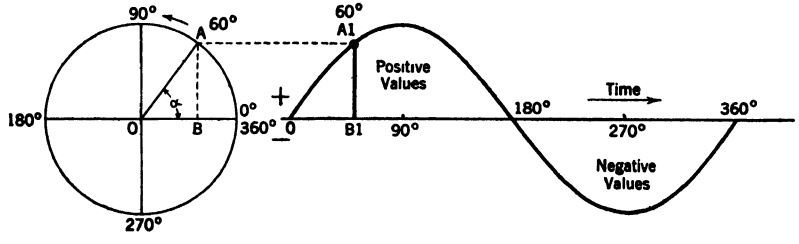

FIG. 60.—A sine curve.

An example of the construction of a sine curve is shown in Fig. 60. If point *A* moves at a uniform rate round a circular path in a counterclockwise direction as indicated, it is quite obvious that while the point *A* is traveling round the circle, the angle α will uniformly increase from 0 to 180 deg., and then to 360 deg., that is, back to zero. It is ob-

served that the length of the perpendicular line AB drawn from the point A to the horizontal axis of the circle is proportional to the "sine" of the angle α because sine $\alpha = \frac{AB}{OA}$, and OA remains constant throughout the revolution. As the point A revolves, the length of this line AB varies from zero at the instant when the point A is at 0 deg. to a maximum length equal to OA when A is at 90 deg., back to zero when it is at 180 deg., then to another maximum when A is at 270 deg., and lastly back to zero when A has reached 360 deg. (zero) again. To distinguish between the lengths above the horizontal axis and those below, all the values of AB from 0 deg. to 180 deg. are positive, or above the

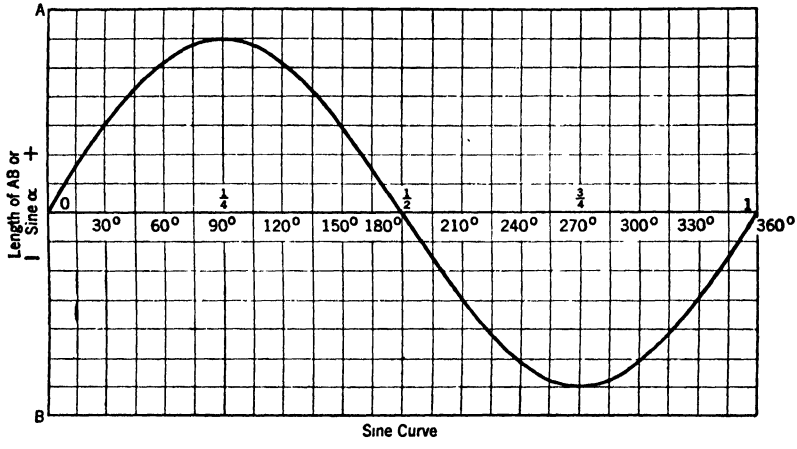

FIG. 61.—One complete cycle of a-c. represented by a sine curve. The height of the amplitude above or below zero axis, or for distances along OA and OB is determined by the sine α. Refer to Fig. 60.

horizontal, and all those from 180 to 360 deg. are negative, or below the horizontal.

It will be seen that although the point A is revolving at a uniform rate, the length of the line AB is not varying at a uniform rate. Its length increases rapidly at first, then more and more slowly until, when A is nearing 90 deg., its length remains nearly constant. Then after A has passed 90 deg. the length of AB starts to decrease, slowly at first, then more and more rapidly until, when A is at 180 deg., AB has no length at that moment, because OA now coincides with the horizontal line O to 180°, or the radius.

Since the length of the line AB along the vertical axis at any point is proportional to sine α, Fig. 60, the distance along the vertical axis may also represent the values sine α; and, since the angle α is pro-

portional to the length of time during which the point A has been moving, the distances along the horizontal axis may also represent the values of the angle α. If a horizontal dotted line is drawn from A, this line will intersect a vertical line drawn from $B1$ on the zero axis; the horizontal and the vertical lines will intersect at $A1$. It is seen that the height of the amplitude AB is equal to the amplitude $A1B1$. All other points are located in a similar manner, and by drawing a line through all of the points located the sine curve depicted will be derived. The number of degrees (or distance) from 0 (zero) to $B1$ is equal to the number of degrees from 0 (zero) to A on the circumference of the circle. Thus we may plot a curve as in Fig. 61 to illustrate the variations in the length of the line AB in Fig. 60 for time elapsed along the horizontal axis from 0 (zero) to 360°.

The foregoing discussion does not take into consideration the fact that in many practical cases the curve representing actual values measured will be more or less distorted from the true sine form, due to other factors. However, for the purpose intended, sufficient accuracy is obtained if the reader considers that the values of the component factors of all periodic motions follow a simple sine law.

CHAPTER VII

STORAGE BATTERIES AND CHARGING CIRCUITS—AUXILIARY POWER

The Necessity for a Storage Battery in a Radio Installation.—The International Radio-Telegraphic Regulations require that an auxiliary source of direct or alternating current (or a low-powered emergency transmitter) be available for operation of the motor-generator, in case of an accident to a vessel at sea that might put the ship's generator out of action.

The United States statute requires that all vessels carrying radio equipment be fitted with an emergency transmitter which can be operated independently of the ship's generator. This transmitter must have a daylight transmission range of at least 100 miles, and must be capable of functioning continuously for a period of four hours. If an independent emergency transmitter is not supplied, a source of auxiliary power of sufficient capacity to operate the motor-generator independently of the ship's generator must be available. The regulations of the International Radio-Telegraphic Convention require that emergency apparatus be capable of functioning for at least six hours. Also, that it shall have a minimum range of 80 nautical miles in the case of a ship with constant radio service, and 50 miles where the ship's station operates upon a service of limited duration.

A small a-c. or d-c. generator operated by a gasoline or oil engine is permissible, as a source of current supply under the United States statute, but the general custom is to employ a battery of storage cells for direct operation of the motor-generator or emergency transmitter.

Types of Storage Cells.—Two general types of storage cells are used as a source of emergency power: the lead plate, sulphuric acid cell, such as the Exide, Exide-Ironclad and Chloride types, manufactured by the Electric Storage Battery Company, and the Edison nickel iron-alkali cells.

Fundamental Action in a Storage Battery.—It is not really electricity which is stored up in a storage cell, but during the process of charging a storage battery from a d-c. source, the charging current through the cell from plate to plate performs a certain amount of chemical work.

This stored-up chemical energy provides an e.m.f. and, if a circuit is properly connected to the plates, current will flow through the circuit.

The Lead Cell.—The lead cell comprises two sets of prepared plates, known as the " positive " and "negative " plates, immersed in a dilute solution of sulphuric acid. This dilute solution is known as the " electrolyte."

When a lead storage cell is put on discharge, the current is produced by the acid of the solution going into and combining with the porous part of the plate called the " active material." In the positive plate, the active material is lead peroxide and in the negative plate it is metallic lead in a spongy form.

When the sulphuric acid, H_2SO_4, in the electrolyte combines with the lead, Pb, in the active material of both plates, a compound known as *lead sulphate*, $PbSO_4$, is formed.

As the discharge progresses, the electrolyte becomes weaker by the amount of acid that is used in the plates, and the formation of more water due to the chemical combination of the hydrogen, H, and oxygen, O, producing the electric current, and incidentally producing the compound of acid and lead called lead sulphate. This sulphate continues to increase in quantity and bulk, thereby filling the pores of the plates. As the pores of the plates become thus filled with the sulphate, the free circulation of acid into the plates is retarded; and, since the acid cannot then get into the plates fast enough to maintain the normal action, the battery becomes less active, as the rapid drop in voltage indicates.

During the charging period, direct current must pass through the cells in the direction opposite to that of discharge. This current will reverse the action which took place in the cells during discharge. As just mentioned, during discharge the acid of the solution went in and combined with the active material, filling its pores with sulphate and causing the solution to become weaker; but reversing the current through the sulphate in the plate will restore the active material to its original condition and return the acid to the solution. Thus, during charge, the solution gradually becomes stronger as the sulphate in the plate decreases, until no more sulphate remains, and all of the acid has been returned to the solution, when it will be of the same strength as before the discharge. The same acid will be ready to be used over again during the next discharge. Since there is no loss of acid by this process, none should ever be added to the solution, except to replace any that is spilled out.

The whole object of charging, therefore, is to drive from the plates the acid which has been absorbed by them during discharge.

The chemical action which takes place in a lead cell during charge and discharge can be represented by the following equation:

$$PbO_2 + Pb + 2H_2SO_4 \underset{\text{Charge}}{\overset{\text{Discharge}}{\rightleftharpoons}} 2PbSO_4 + 2H_2O$$

From left to right, this equation represents discharge, and right to left represents charge.

General Construction.—A storage battery consists of one or more

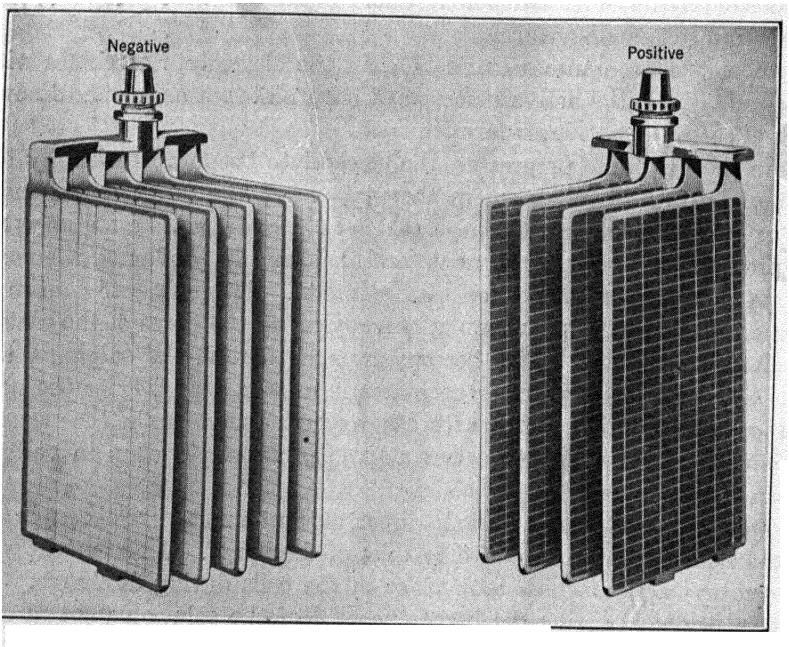

FIG. 62.—The negative and positive plates of the type MVA Exide cell.

cells. A cell consists essentially of a set of positive and negative plates, as shown in Fig. 62, immersed in the electrolyte.

The well-known Exide type of plate is used most widely. The grid or framework of the plate consists of a number of vertical ribs joined together by short horizontal bars. The latter are flush with the plate surface on one side, but extend only part way through the plate and are staggered on opposite sides. The active material is thus disposed in the form of vertical strips or ribbons extending from the top to the bottom of the plate between the vertical ribs and locked in place by the horizontal bars.

The active material is applied to the perforations of this grid as a

paste of litharge or oxide of lead mixed with dilute sulphuric acid. By means of a current of electricity and a suitable electrolyte, the active material is converted to peroxide of lead on the positive plates and spongy lead on the negative plates.

Each plate is made with two feet projecting below the bottom of the plate, as shown in Fig. 63, so located that the feet of the positive plate rest on two of the four ribs in the bottom of the jar, while the feet of the negative plate rest on the other two ribs. This construction permits the separators to project beyond the surface of the plate on all four edges, thus offering more complete protection against internal short circuits. It also prevents short circuits by deposits of sediment on the top of the ribs.

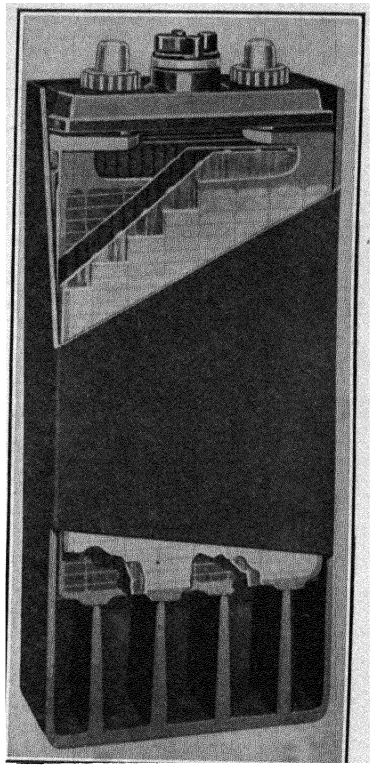

FIG. 63.—Cutaway view of MVA Exide cell showing construction.

These plates are first assembled into groups and are joined to substantial straps by a process known as lead burning. Projecting from the straps are the terminal posts, each provided with a shoulder to support the cell cover, above which is a threaded portion to receive the alloy sealing nut for clamping the cover firmly on the shoulder. The joint is sealed with a soft rubber gasket.

The separators, placed between the plates, are of a special kind of selected wood, treated to remove injurious compounds, with a perforated hard-rubber sheet between the positive plate and the wood separator on either side.

The two groups when interlaid and with separators in place are known as an *element.* This element is placed in a hard rubber jar made of a tough compound known as *Giant.*

A hard-rubber cover is placed in the top of the jar and a hot sealing compound is poured in the channel around the edge, thus providing for a perfect seal flush with the top of jar and cover.

The cover is fitted with a combined vent and filling plug, as shown in Fig. 64, which prevents the slopping of the electrolyte, and also pro-

vides a vent and spray trap to permit the escape of gas during charge, but catches and returns any acid spray to the cell. It is, therefore,

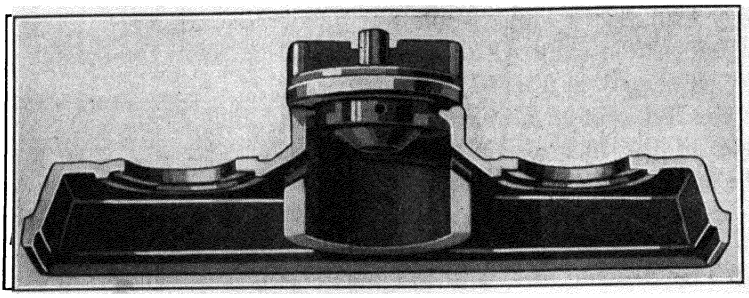

FIG. 64.—Cross-section of Exide cell cover showing the vent and filling plug in place.

unnecessary to provide a separate room in which to charge the battery or special protection for metal surfaces in the vicinity of the cells, while charging.

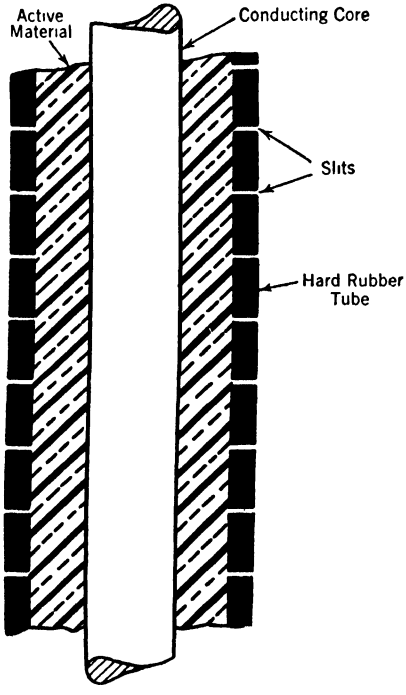

FIG. 65*a*.—A cross-sectional sketch of an Exide ironclad positive plate. Each individual section is known as a "pencil"

The cells are assembled in the proper number of hardwood trays painted with acid-resisting paint. The individual cells in each tray are connected by means of intercell connectors. Terminals are provided on each tray, so that the trays in the battery can be connected together conveniently by the intertray jumpers. Each tray has porcelain insulators on the bottom, sides and ends.

The Ironclad Storage Battery.—The Exide-Ironclad type of storage battery is used for some installations on shipboard. The positive plate in this type, as shown in Figs. 65*a*, 65*b* and 65*c*, has a grid composed of a number of parallel, vertical lead-alloy rods united integrally to the horizontal top and bottom frames, the former being provided with the usual conducting lug.

Each vertical rod forms a core, which is surrounded by a cylindrical

pencil of peroxide of lead, the active material. This, in turn, is enclosed by a hard-rubber tube, having a number of horizontal slits. These slits serve to provide access for the electrolyte or solution to the active ma-

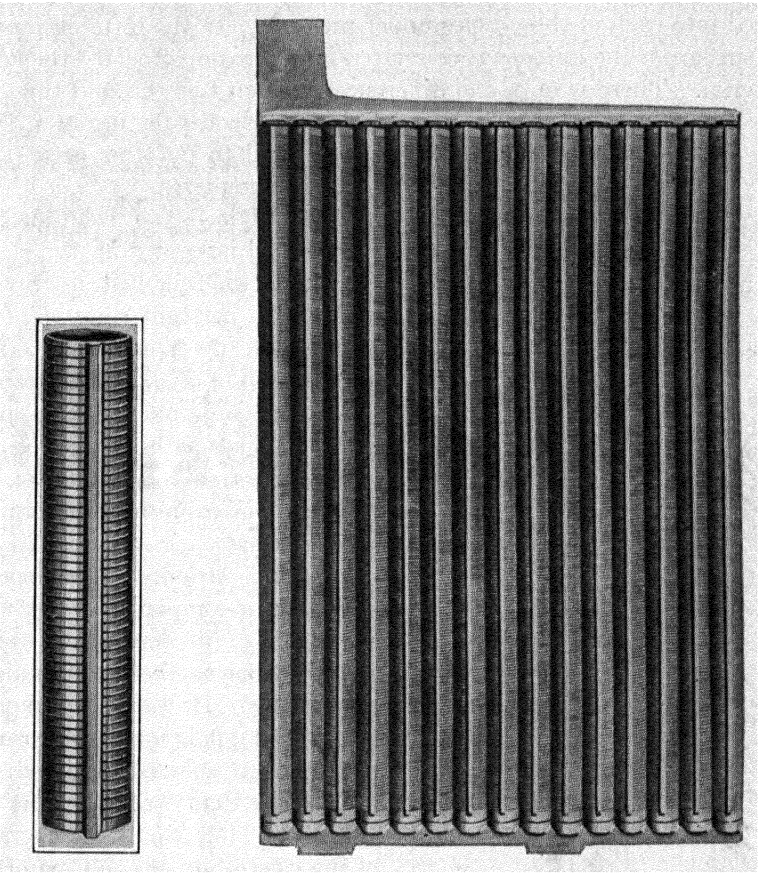

FIG. 65*b*. FIG. 65*c*.

FIG. 65*b*.—Positive pencil of Exide ironclad battery.
FIG. 65*c*.—Positive plate of Exide ironclad battery.

terial, and yet are so fine as practically to eliminate the washing out of the material.

The negative plate used with the Exide-Ironclad positive plate is similar to the Exide negative plate previously described. The cell is assembled in the same general way also.

The Chloride Cell.—The Chloride type of cell used on many ships is of the Planté type. The Exide and Exide-Ironclad batteries are com-

monly known as the pasted-plate type, because the active material is applied to the plates in the form of a paste.

The grid of the Chloride positive paste is cast of lead-alloy with a number of circular holes. A button of pure lead ribbon is rolled and forced into each of these holes under pressure. In the forming process, the surface of the buttons is converted into peroxide of lead—the active material. There is only one difference between this cell and the other types described—the use of a different method to put the active material on the plates

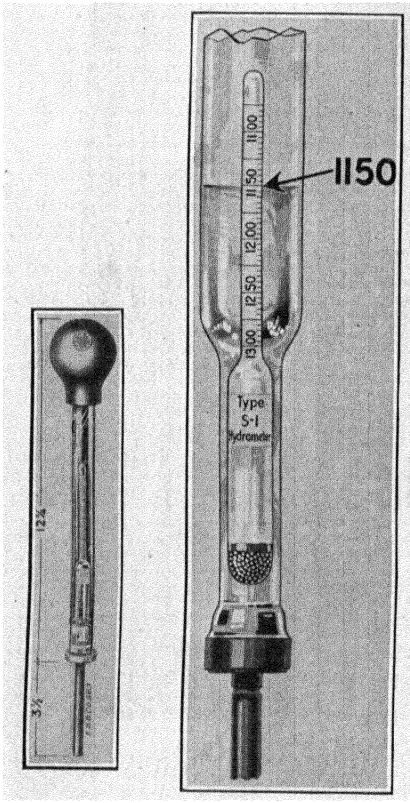

FIG. 66*a*. FIG. 66*b*.

FIG. 66*a*.—A hydrometer.

FIG. 66*b*.—Showing how the specific gravity of electrolyte is measured by a hydrometer.

Electrolyte.—The solution in a storage cell is known as the *electrolyte* and in the cells just described is about a 20 per cent solution of sulphuric acid. It is important to have the electrolyte of the right strength, or the cell will not function properly. The strength of the electrolyte, or the right proportion of acid to water, is expressed in terms of *specific gravity*.

Specific Gravity.—The specific gravity of a compounded solution is a measure of its density, or weight, as compared to that of chemically pure water. If water is taken as unity (or 1), it is found that certain compounded solutions of acid, etc., are heavier than water by a certain amount. Thus the specific gravity of the electrolyte of one type of lead plate storage cell is approximately 1.280, meaning that, if a cubic centimeter of water weighs one gram, one cubic centimeter of the electrolyte weighs 1.280 grams. It is, therefore, evident that the greater the proportion of the acid in the electrolyte of a storage cell, the higher will be the reading of the gravity.

The Hydrometer.—The gravity of the solution of a storage cell is measured by an instrument known as the *hydrometer*. The long glass rod, the hydrometer, has the bulb at one end loaded with shot or mer-

cury, as shown in Figs. 66*a* and 66*b*. When a syringe full of solution is drawn up into the glass barrel, the hydrometer floats at a certain level, depending on the weight of the liquid. The top of the hydrometer will protrude above the surface. The reading of the hydrometer scale at the surface of the solution is a measure of the specific gravity. The specific gravity of the Chloride storage cell when fully charged varies between 1.205 and 1.215, and for the Exide and Exide-Ironclad between 1.270 and 1.280 normally.

Types of Storage Batteries Used on Shipboard.—There are two principal functions of a storage battery in connection with the radio set on shipboard: the main emergency battery, consisting of sixty cells of a capacity sufficient for the size of radio transmitters, or the twelve-cell emergency storage battery used on ships having a spark coil, and the small radio "A" battery for lighting the filaments of the vacuum tubes in the receiving set.

Capacity of a Storage Cell.—The capacity of a storage cell is rated in ampere-hours. The ampere-hour is the unit represented by current of one ampere flowing through a given circuit for an hour of time.

For example, a certain MVA Exide cell is rated as having a capacity of 140 ampere-hours at the four-hour rate. The normal discharge rate is obtained by dividing the capacity, 140 by 4, or 35 amperes.

The type and rating of the Exide cells furnished by The Electric Storage Battery Company for auxiliary power is shown in the following table:

	Capacity, Ampere-Hours	
	4-Hr. Rate	10-Hr. Rate
60-cell MVA-9.	118	137
11. .	147½	171
13. .	177	205
15 .	206½	240
17	236	274

The smaller sizes are used in connection with ½-kw. transmitters and the larger sizes with the 2-kw. sets. Those of the highest capacity are employed to operate some emergency lights as well as the radio set. The 60-cell MVA-11 Exide is used generally with the 2-kw. set

In some special cases, where an exceptionally long-life battery is desirable or conditions are severe, the Exide Ironclad type is used. The ratings of several sizes of the Exide Ironclad are given in the following table:

	Capacity, Ampere-Hours	
	4-Hr. Rate	10-Hr. Rate
60-cell MVA-9	122	146
11	153	183
13	184	220
15	214	256
17	245	293

In warm climates, it is desirable to use a battery having a lower maximum gravity in order to prevent overheating when on charge. The type MVAL is the standard Exide with lowered gravity. The lowering of the gravity reduces the capacity for the same size of cell. That is, the MVAL-11 cell has a smaller rating than the MVA-11.

Where space will permit and the higher cost is not objectionable, the MVSA type is used. This type of cell employs the standard Exide plates with a wider spacing between them. For the same capacity in the MVSA, as in the MVA cell, the dimensions of the cell will be larger.

If, for any reason, a 60-cell battery is not supplied, an emergency transmitter is employed. This is operated from a portable 12-cell, 24-volt battery, having a smaller size cell. The 12-cell XC-15-1 type, most generally used, has a capacity of 100 ampere-hours at the 5-ampere rate.

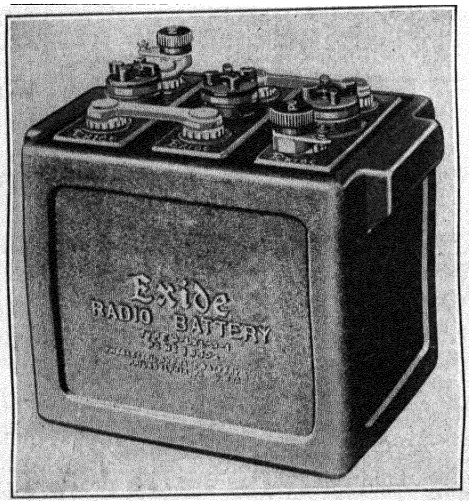

Fig. 67.—6-volt Exide filament battery.

The 6-volt filament lighting battery is a portable battery assembled as a 3-cell unit and has a rating of 100 ampere-hours. Type 3-LXL-9 is shown in Fig. 67.

Charging.—A storage battery is charged by connecting the positive terminal of the battery to the positive terminal of a source of direct current and the negative terminal of the battery to the negative terminal of the source, as illustrated in the simple charging circuit in Fig. 68. The voltage of the charging source

must exceed the voltage of the battery and a regulating resistance or rheostat is usually connected in series in the charging circuit.

The polarity of the charging mains may be determined in three ways:

(1) By a direct-current voltmeter of the magnetic type.
(2) By an electrochemical polarity indicator.
(3) By dipping the terminals of the generator in a glass of plain or salt water.

How to Charge.—Direct-current voltmeters with magnetic mechanism have a (+) and (−) mark on the binding posts. If connected improperly to a source of direct current, the pointer, instead of swinging in the direction of the full-scale position, will move to the left of the zero position; but when connected properly, the pointer moves from left to right. The wire of the generator connected to the (+) binding

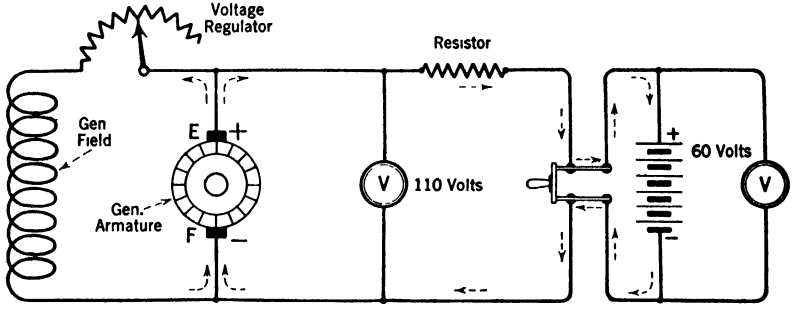

FIG. 68.—Showing how a 60-volt bank of storage batteries is charged from a 110-volt d-c. generator.

post of the voltmeter is the positive wire. Of course, the negative wire is the other.

Chemical polarity indicators have a solution of iodide of potassium mixed with starch, sealed in a glass tube, provided with terminals. When connected to the terminals of a charging line, current flows through the liquid and decomposes the solution, turning the positive terminal of the tube blue.

The polarity of the charging source may be ascertained by dipping the terminals of a d-c. line in a glass of plain or salt water. Bubbles will appear on the negative terminal. The negative wire should be connected to the negative terminal of the battery. *Caution*: *Do not permit the wires to touch when making this test.*

When the circuit from the charging generator is closed, current flows from the positive plates through the electrolyte to the negative plates, until the lead sulphate in the active material is converted again

into lead peroxide and spongy lead. The length of time required will depend upon the degree to which the cell has been discharged and the charging rate. In any case, the charging should continue until there is no further rise in the specific gravity.

The regulating resistance required in the charging circuit to control the rate of charge may be either fixed or variable. Usually for the regular charge it is a fixed resistance of the proper amount for the battery to be charged. A bank of lamps may be used, in which case the number of lamps used determines the rate of charge.

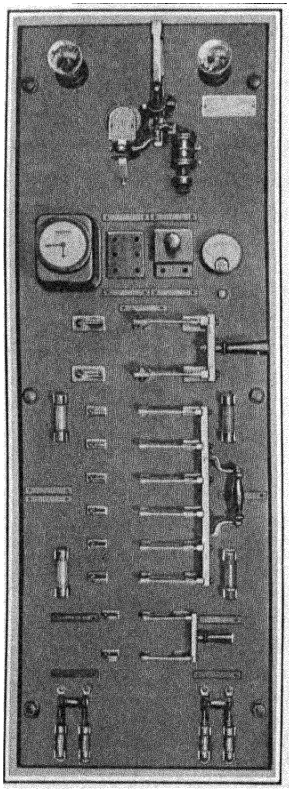

FIG. 69.—Marine storage battery charging panel.

It should be kept in mind that the voltage of the charging generator must always exceed the maximum voltage of the storage battery, because the voltage of the battery exerts a back pressure or counter e.m.f. on the charging source. If the voltage of the generator is less than that of the battery, the latter will not be charged.

The Charging Panel. — As the 60-cell emergency radio battery has a voltage too high to be charged from the ship's 110-volt generator, the battery is divided into two equal banks of 30 cells each for charging. The Electric Storage Battery Company's standard charging panel is shown in Fig. 69. The fundamental diagram of the connections from the board to the batteries is shown in Fig. 70, and the battery connections in Fig. 71.

The following instructions cover the operation of this panel:

First determine that the reversing switch is closed in the proper direction by observing whether the voltmeter reads when the plug switch is inserted in the lower left-hand receptacle. If it does not read, reverse the reversing switch, then ascertain that the two halves of the battery are also properly connected by taking readings in the upper and lower right-hand receptacles.

The voltmeter circuit is normally open, and a push-button switch is provided on the switchboard for closing the circuit when it is desired to take a voltage reading. This precaution is taken to prevent inductive

effects, incidental to the operation of the transmitter, from damaging the meter.

Refer to the photograph, Fig. 69. Open the 6-pole double-throw

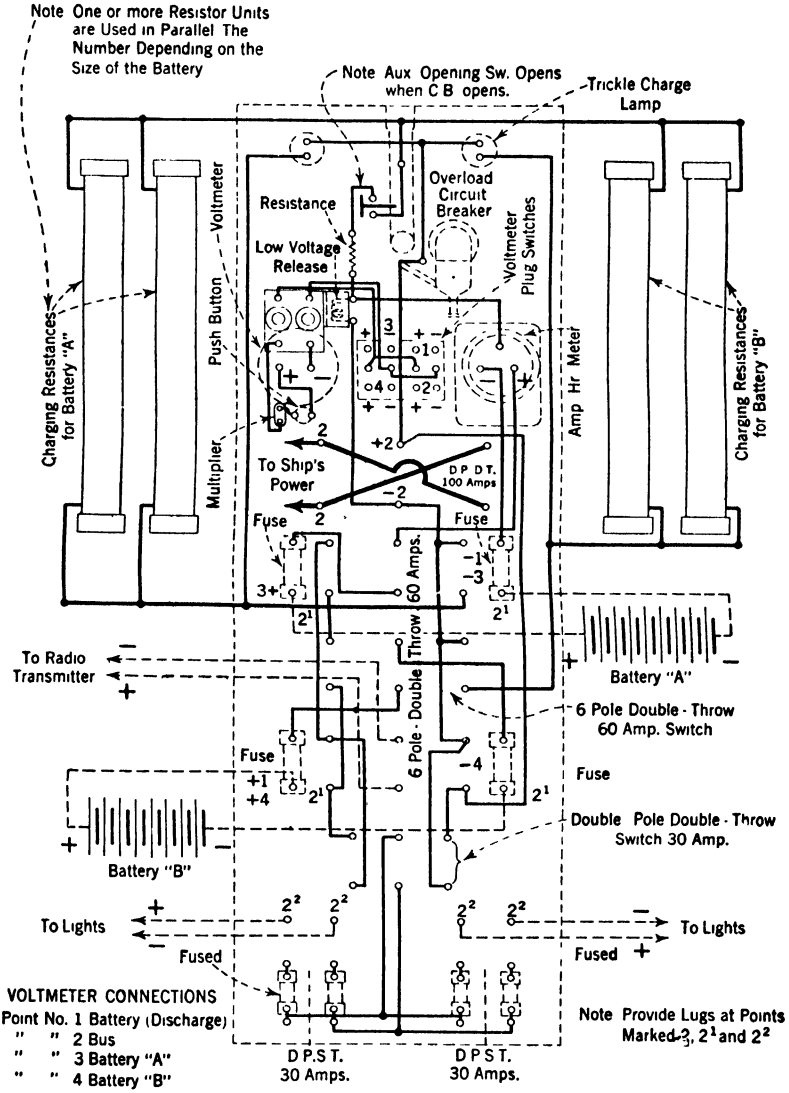

FIG. 70.—Switchboard wiring diagram of the Exide marine type charging panel.

switch. Close the circuit breaker, at the same time holding up the plunger of the low voltage release coil, and then close the 6-PDT switch to the left. This will place the respective halves of the battery on

charge through the charging resistance on the back of the board, which should become uniformly warm. The red pointer on the ampere-hour meter should be set for the ampere-hours given by the manufacturer for the size of battery to be charged. The black hand of the ampere-hour

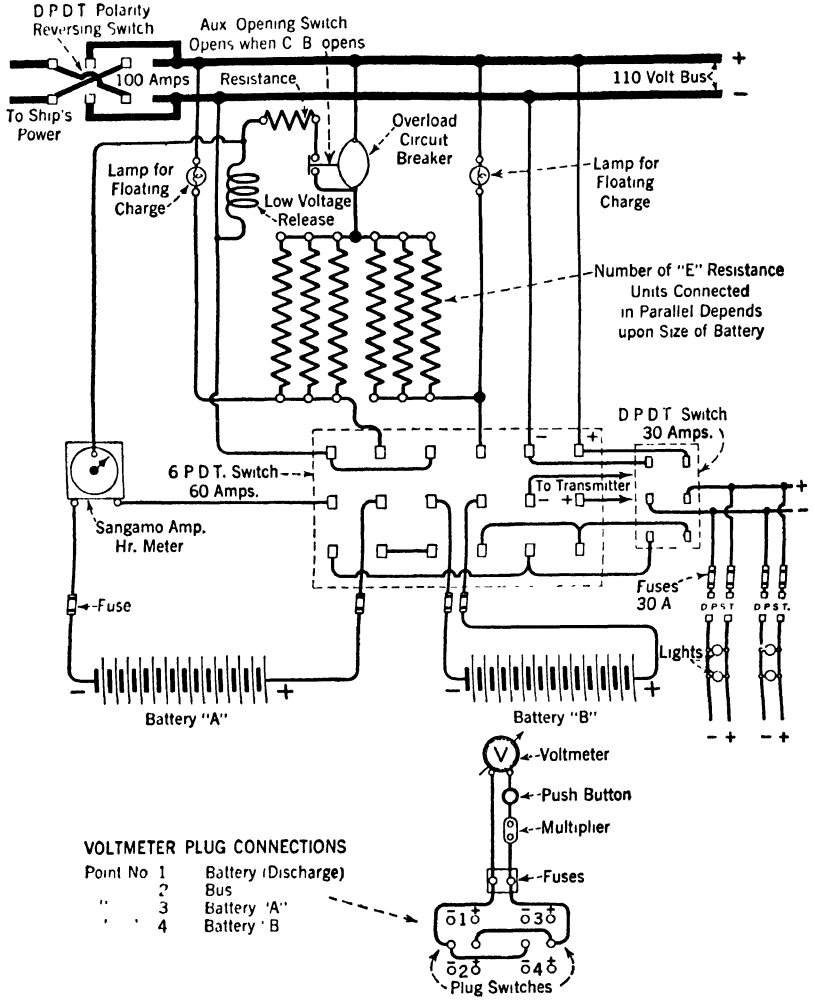

FIG. 71.—Schematic diagram of the Exide marine type charging panel.

meter indicates the state of discharge of the battery at any time. As soon as the charge is started the black hand will begin to move towards zero, and the charge should be complete when it reaches zero. When the black hand reaches zero, it makes a contact which opens the circuit

breaker by means of the automatic trip, thus automatically cutting off the charge. For the monthly charge, or if for some other reason the battery requires an overcharge, it is necessary to remove the cover from the ampere-hour meter and turn the black hand back, halfway to the red hand. (The ampere-hour meter should be maintained in good operating condition by being overhauled and recalibrated once every twelve to eighteen months.)

If the ship's power circuit fails, while the battery is charging, the low voltage release will open the circuit breaker, preventing the battery from discharging back into the bus. The battery can be used for supplying current in such an emergency by closing the 6-pole double-throw switch to the right.

With the 6-PDT switch closed to the left and the circuit breaker open, the charging circuit through the resistance units will be open, but the battery will be receiving a floating charge through the two lamps mounted in the upper corners of the switchboard. This is intended to be the normal condition of operation, i.e., battery fully charged and floating, with circuit breaker open, and the 6-pole switch closed to the left. With the 6-pole switch in this position, the radio outfit is connected direct to the bus.

When the battery is floating or charging, the lights cannot be operated from it, and the lower double-pole double-throw (DPDT) switch should then be closed to the left. The feeder switches for the various light circuits can be opened or closed, as desired.

With the circuit breaker open, close the 6-pole switch to the right.

With the battery discharging, the lights can be operated from either the bus or the battery by closing the small lower double-pole double-throw switch to the left or right, respectively.

Whenever the ship's generator is shut down, care should be taken to open the radio circuit switch on the ship's switchboard, and all switches on the battery switchboard. Do not burn lights from the battery at such times except for emergency.

The schematic diagram, Fig. 72, shows the d-c. and a-c. power circuits, a 120-volt storage battery bank and charging equipment of a radio transmitter.

Theoretically we should be enabled to draw the same quantity of current from a storage battery upon discharge as put into it on charge, but practically this cannot quite be done. The ampere-hour meter on the panel is constructed to take care of the required overcharge automatically by a device known as a *resistor*. Briefly, it causes the pointer of the ampere-hour meter to move to the zero position of the scale from a higher reading at a slower rate than that which brought it to a maxi-

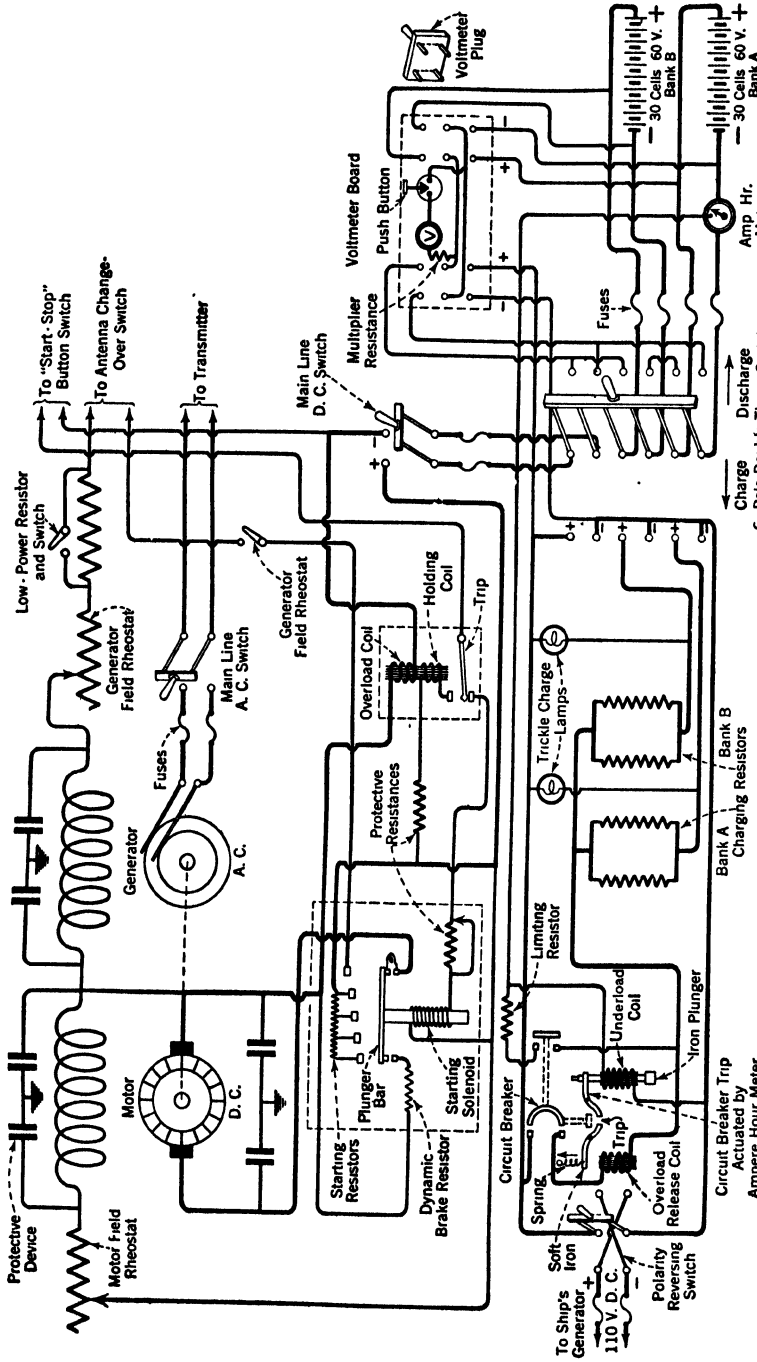

FIG. 72.—Schematic diagram of the d-c. and a-c. power circuits, and a 120-volt storage battery bank and charging equipment, of a radio transmitter. There are two condensers (not shown) which serve as a protective device across the generator armature. The motor and generator fields are protected by one set of condensers only, whereas two sets are shown in the diagram for clarity.

mum reading, thus giving the requisite overcharge. But, with all this, the readings of the ampere-hour meter cannot quite keep pace with the state of charge of the battery; hence, it is necessary, about once a month, to move the black hand of the meter back from the zero position 20 to 50 ampere-hours, after which the battery is placed on charge until the pointer again returns to the zero position.

Care and Operation of the Storage Battery.— Everything about the battery—tops of cells, connections, etc.—should be kept clean and dry.

Keep the level of the electrolyte always above the tops of the plates by replacing evaporation with pure water. The acid does not evaporate; therefore, *never add acid.*

The system is laid out with the idea that the battery is to be kept fully charged at all times. The battery is to be *floated* except when charging or discharging. When floating, both lamps on the battery switchboard will burn dimly. If either lamp goes out, replace it immediately with another of the same rating.

Flames of all kinds (match, candle, lantern, cigar, etc.) must be kept away from the battery at all times.

In order to check the generator polarity, and to guard against the battery becoming accidentally discharged through the reversal of the generator, read the voltmeter frequently, with the voltmeter plug in the openings marked " Bus."

If a jar develops a leak, promptly replace it.
Keep terminals and connections tight and clean.
Do not allow any impurities to get into the cell.

Hydrometer readings of the cells should be taken to determine the state of charge of the battery. The specific gravity reading, taken where a cell is fully discharged, or at the end of the charging period, will depend on the type of battery. For example, the fully charged gravity of the MVA-11 Exide is between 1.270 and 1.280.

The student should bear in mind certain fundamental facts concerning the lead storage cell:

(1) It has a low internal resistance and therefore will deliver current at a very high rate, if necessary, without damage to the cell.
(2) Due to the absence of polarization, as in the primary cell, the current output does not decrease as rapidly.
(3) During the charging period, a stated number of amperes must pass through the cell, the actual value being designated by the manufacturer.

(4) The lowest point to which the battery should be discharged is designated by the maker and should not be exceeded except in an emergency.

(5) The fully charged voltage of the lead cell with 1.280 specific gravity averages 2.1 volts on open circuit, values as high as 2.5 or 2.6 volts being obtained with the charging current flowing.

(6) The lead type cell is said to be fully discharged when the voltage of the individual cell falls to 1.7 or 1.8 volts, provided the reading is taken with the cell discharging at normal rate.

The Edison Storage Battery.—The Edison cell, shown in cross-section in Fig. 73, differs from the lead cell both in the construction of the plates and the electrolyte. The active materials of this cell are iron oxide and nickel hydrate. The alkaline electrolyte is a 21 per cent solution of potassium hydrate mixed with a small amount of lithium hydrate.

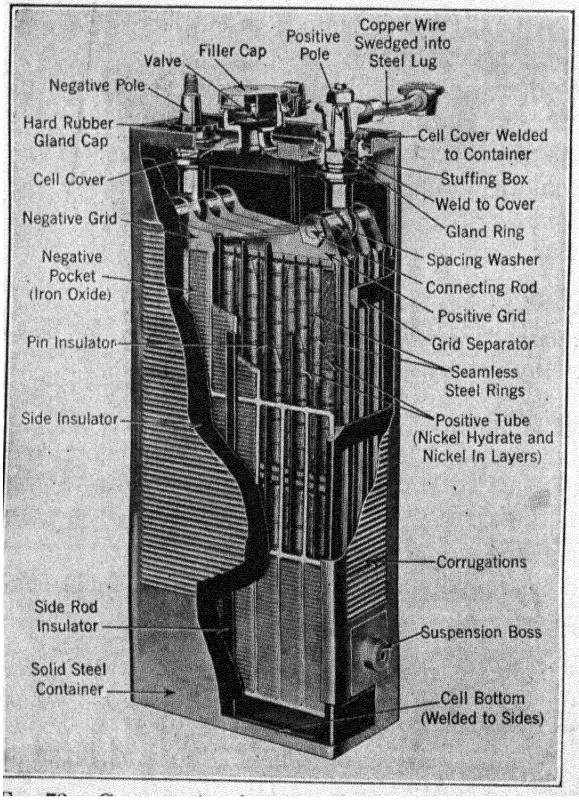

FIG. 73.—Cross-sectional view of the Edison storage cell.

Construction.—Fig. 74 shows the construction of the positive and negative plates. The active material of the positive plate is nickel hydrate. It is *loaded* in layers, in $\frac{1}{4}$-in. perforated tubes formed of spirally wound steel ribbon. Alternating with the layers of nickel hydrate, layers of pure nickel flake are introduced to increase the electrical conductivity. When

loaded, the tubes are reinforced by eight seamless steel rings equidistantly spaced. Thirty of these loaded perforated tubes are clamped on the steel supporting grid.

Assembly of Edison Cell.—The active material of the negative plate is iron oxide. Mixed with a small amount of oxide of mercury to increase the conductivity, it is loaded into perforated, rectangular, sheet-steel pockets, and solidly tamped down. When loaded, the pockets are placed in the interstices of the steel supporting grid and forced, between

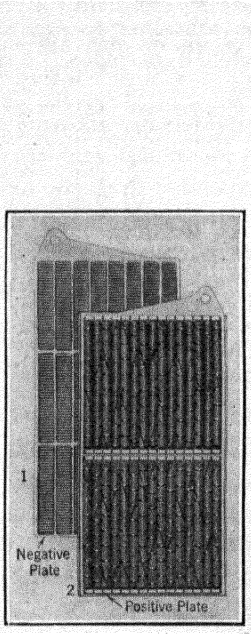

FIG. 74.

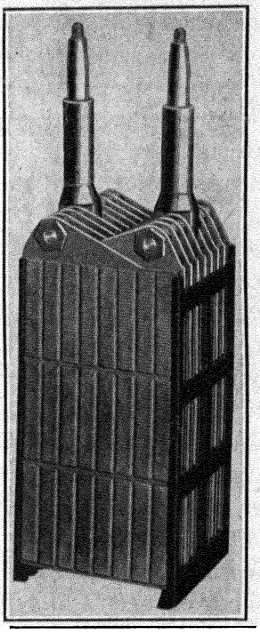

FIG. 75.

FIG. 74.—A negative and a positive plate of an Edison cell.
FIG. 75.—Plate assembly of Edison cell ready for insertion into container.

corrugating dies, into perfect electrical contact, under hydraulic pressure of 120 tons.

All the plates of like polarity in the cell are slipped over a steel connecting rod, through the hole provided for the purpose at the top of the grid; the cell poles are fastened at right angles to these connecting rods; proper spacing is provided by steel washers of correct thickness; and, finally, lock washers and nuts are fitted to the threaded end of the connecting rod, thus clamping all into a compact unit. The positive and negative plates are intermeshed, and small hard-rubber pins are so placed as to keep them apart. Grooved hard-rubber *ladders* are fitted

over the side edges of the plates. These have shoulders at the bottom upon which the plates rest, and they perform the double function of keeping the proper distances between the plates and insulating them from the container. Fig. 75 shows the plate assembly ready for insertion into the container.

The container is constructed of nickel-plated sheet-steel, corrugated to give it added strength. The edges and the seams of the container, and the bottom and the top are welded in place. The elements are placed in the steel container and sheets of hard-rubber are inserted between the outside negative plates and the container to secure perfect insulation, after which the steel top is welded in place. The cell is securely sealed, except for the filler opening.

The only opening in the cell is that provided for allowing the gases to escape and for filling. This consists of a metal seat upon which rests a hemispherical hard-rubber valve suspended from the hinged top, which is provided with a double-acting spring that holds it open or closed as required. The valve normally remains seated, thus preventing air or impurities from getting into the cell, but is lifted by the gas as it forms, allowing it to escape.

Charging the Edison Cell.—Direct current must be used to charge the Edison storage battery, as well as other types, and where only alternating current is available it is necessary to convert it to direct current by a motor-generator set or other suitable form of current rectifier. The charging rate depends upon the type of battery. Although several types are manufactured, those most commonly used in marine service are the 5B4, 5B2 and 5B1 types. Each contains five $1\frac{1}{2}$-volt cells, connected in series, giving them a rating of 6 volts. Data concerning the ampere-hour capacity, charge and discharge rates follow:

Type of Cell	Ampere-Hour Capacity	Average Voltage at Normal Discharge Rate	Normal Charge and Discharge Rate, Amperes	Hours Required to Completely Charge at Normal Rate	Maximum Charge Rate, Amperes	Minimum Charge Rate, Amperes
5B4	75	6	15	7	15	5
5B2	37 5	6	7.5	7	7.5	2
5B1	18 75	6	3.75	7	3 75	2

Where 110-volts direct current is available, a charging resistance should be employed, specifications for which can be calculated as follows:

(1) Multiply the number of cells in the battery by 1.7.
(2) Subtract this value from 110 and divide the result by the normal rate of the type of cell (15.0, 7.5, or 3.75, depending upon whether the battery is a B-4, B-2, or B-1).
(3) The result will be the value of the resistance in ohms which should be used.
(4) The normal rate of the cell multiplied by 2 will be the current carrying capacity of the resistance in amperes which should be used.

Before starting to charge, see that the electrolyte solution is at the proper level; if it is low, bring it to the proper level (approximately $\frac{1}{2}$ in. above the plates) by adding pure distilled water. The temperature of the solution on charge may vary from 90° to 115° F.; higher than 115° will shorten the life of the battery. In connecting the battery to the charging circuit, always connect the positive terminal to the positive side of the line, and the negative terminal to the negative side of the line. (Edison cells, because of their construction, will not be permanently injured by reversed charging or overcharging, yet their life is somewhat shortened by so doing.)

The approximate hours required to completely charge an Edison 6-volt battery after it has become discharged may be determined as follows:

(1) Multiply the normal rate of the cell by 7 and divide the result by the current rate furnished by the charge. When the proper resistances are used, as previously specified, divide by the normal rate of the cell.
(2) The result will be in hours required to fully charge after a complete discharge.

Reaction of Charge and Discharge.—The process taking place in an Edison cell during charge and discharge is as follows:

The first charging reduces the iron oxide to a metallic iron, while converting the nickel hydrate to a very high oxide, black in color. On discharge, the metallic iron goes back to iron oxide and the high nickel oxide goes to a lower oxide, but not to its original form of green hydrate. On every cycle thereafter the negative charges to metallic iron and discharges to iron oxide, while the positive plate charges to a high nickel oxide. Current passing in the direction of charge or discharge, decomposes the potassium hydrate of the electrolyte, and the oxidation and reduction of the electrode are brought about by the action of its elements. An amount of potassium hydrate equal to that decomposed is always reformed at one of the electrodes by a secondary chemical reaction; in consequence, none of it is lost and its density remains constant.

The final result of charging, therefore, is the transfer of oxygen from the iron to the nickel electrodes, and that of discharging is the transfer back again.

Cautions.—Never put lead battery acid into an Edison battery or use utensils that have held acid; you may ruin the battery.

Never bring a lighted match or other open flame near a battery.

Always keep the filler caps closed except when necessary to have them open for filling.

Keep cells clean and dry externally.

Do not allow the battery leads to touch each other, as they are alive.

Cleaning.—The cells must be kept dry, and care must be taken that dirt and other foreign substances do not collect on the cells. Dirt and dampness are likely to cause current leakage, which may result in serious injury to the battery. A moderately heavy and coarse cloth or rag dampened with warm water will be found useful in removing grease, dirt, dried salts, etc., from the battery.

When cleaning be careful not to allow foreign substances to get into the cells.

Solution Renewal.—The potash electrolyte in Edison batteries has a normal specific gravity of approximately 1.200 at 60° F. when at the normal level and thoroughly mixed by charging and when sample is taken at least one-half hour after charge to allow for dissipation of gas. The low-limit specific gravity, beyond which it is not advisable to run an electrolyte, is 1.160. When previous electrolyte has reached approximately the low limit of 1.160, the new solution should be *Standard Renewal.*

Always use Edison Electrolyte solution in Edison cells.

Do not pour out old solution until new has been received and is ready for use. Never allow cells to stand empty.

When ready to renew solution, first completely discharge the battery to zero voltage. Then pour out half the solution, shake the battery vigorously, and then empty. Do not rinse batteries with water; use only the old solution. Immediately after emptying each cell pour in new solution to the proper height, using a clean glass funnel. When the new electrolyte is in and the battery is again connected up for service, give it a 15-hour charge at the normal rate.

If the Edison battery is properly used it will not be necessary to renew the electrolyte for a period of years; pure distilled water must be added occasionally to take care of evaporation.

Specific Gravity.—The density or specific gravity reading of the electrolyte of an Edison battery has no value in determining the state

of charge or discharge, as the specific gravity does not change to any marked extent during the charging or discharging of the battery.

Specific gravity readings are usually taken only to determine when a change of electrolyte would be advantageous. When making these readings, certain fundamental conditions must be observed. A suitable hydrometer, clean and free of acid and other impurities, is used for the readings, which should be taken when the electrolyte is at the proper height after a complete charge. It is best to allow the batteries to stand for a short period after the completion of the charge to allow free bubbles of gas to dissipate before taking readings. After taking a specific gravity reading return the solution to the cell from which it was taken. Otherwise the gravity of the solution in the cell to which it is added will be increased, and the gravity of the solution in the cell it is to be taken from will be decreased, due to the addition of water made necessary.

Determining State of Charge.—As previously stated, a hydrometer reading of the Edison cell is unnecessary, except to determine if a change in the electrolyte is essential; the specific gravity of the electrolyte does not change with the state of charge or discharge. Consequently, the only direct method of measuring the state of charge is with an ampere-hour meter.

The Tungar Rectifier.—The name *tungar*, which has no particular significance, other than as a distinctive trade name, applies to the hot-cathode-gas-filled rectifier developed in 1916 by the General Electric Company.

The Tungar Bulb.—In the tungar bulb there is argon, an inert gas, at low pressure, which is ionized by the electrons emitted from the incandescent filament. This ionized gas acts as the principal current carrier, with the result that the bulb operates with a very low voltage drop of 3 to 8 volts and is capable of passing a current of several amperes, the current limit depending on the design and size of the tube.

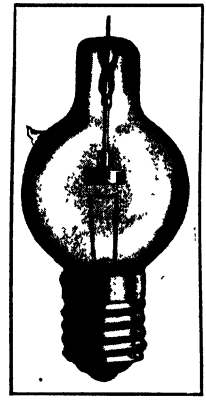

FIG. 76.—Tungar rectifying bulb.

Fig. 76 shows a half-wave tungar bulb constructed of high-heat-resisting glass, in which the cathode (lower electrode) consists of a filament of small tungsten wire coiled into a closely wound spiral, and a graphite anode (upper electrode) of relatively large cross-section.

It has been known for many years that a vacuum tube containing a hot and a cold electrode acts as a rectifier. The bulb rectifies, because

on the half-cycle, when the graphite anode is positive, the emitted electrons from the incandescent filament are being pulled towards the anode by the voltage across the tube, colliding with the gas molecules and ionizing them, that is, making them conductive in the direction of anode to cathode; while, on the other half of the cycle, when the anode is negative, any electrons that are emitted are driven back to the filament, so that the gas in the bulb is non-conductive during that half-cycle.

The bulbs are exhausted to a condition of highest possible vacuum and then filled with a purified gas. Certain impurities, however, even though present in very small quantities, produce a more or less rapid disintegration of the cathode, and also have quite a marked effect on the voltage characteristics of the rectifier. To insure purity of the gases, magnesium is introduced into the bulb at the time of manufacture, chemically to react with such impurities as may be present. This reaction keeps the gas in a pure state practically throughout the life of the bulb. The dark gray or silvery appearance of the bulb is caused by condensation of the purifying agent, *magnesium*, on the interior of the bulb during manufacture. It is not detrimental and does not give any indication of the life or efficiency of the bulb.

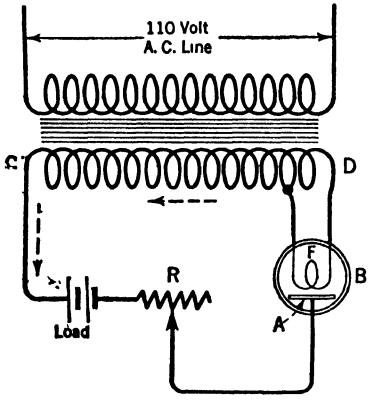

FIG. 77.—Half-wave rectifier and transformer for battery charging.

The general principles which have been briefly discussed apply equally well to half-wave and full-wave types of rectifiers. Fig. 77 shows the connections of a half-wave rectifier in its simplest form. The equivalent in this case consists of the bulb, *B*, with filament (cathode), *F*, and anode, *A*, transformer rheostat, *R*, and the load which is shown as a storage battery.

Assuming an instant when the terminal *C* of the transformer secondary winding is positive, the current follows the direction of the arrows through the load, rheostat, bulb, and back to the opposite side of the secondary at *D* and completes the circuit from *D* to *C*. A certain amount of the alternating current, of course, goes to excite the filament, the amount depending upon the capacity of the tube. In actually designing the rectifier components, the rheostat is omitted and the regulation is obtained entirely by means of a compensator (not shown), with

which the filament transformer is combined, and a reactance. When the a-c. supply reverses, and the side *D* becomes positive, the current is prevented from flowing, for the reason before mentioned. Practically speaking, the current is permitted to flow from the anode to the cathode, but it cannot flow from the cathode to the anode.

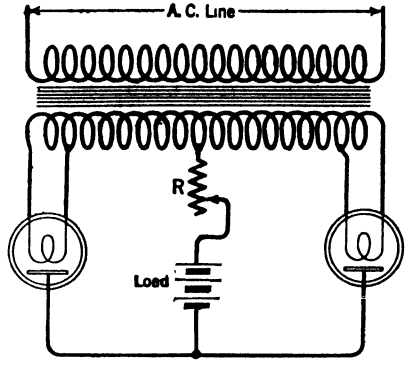

FIG. 78.—Full-wave rectifier circuit for battery charging.

Fig. 78 shows the general method of connecting two half-wave rectifier bulbs with a single load and one compensator. In this case, both half-waves are used and the resultant direct current is a pulsating unidirectional current which may be smoothed out as much as necessary by means of direct current reactance in series. This is unnecessary, however, in ordinary battery charging. The resistance is omitted in commercial rectifier sets and a compensator and reactance substituted, as with the half-wave sets.

Charging Principle.—The principle on which a storage battery is charged from a tungar rectifier is shown in Fig. 79. On the upper half of the cycle, when the transformer voltage exceeds the battery voltage, point *A*, the bulb anode becomes positive, making the bulb conductive, and the charging current flows through the battery. When the transformer voltage falls below the battery voltage, point *B*, the bulb is no longer conductive and the charging current ceases on the lower half of the cycle. Since the anode is negative on the lower half, the bulb cannot conduct the current.

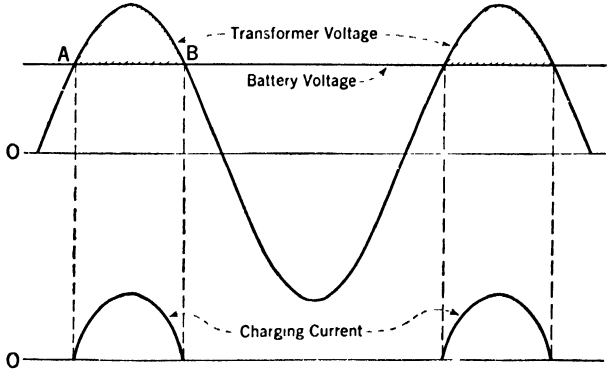

FIG. 79.—Curves illustrating half-wave rectification for charging a storage battery.

Tungar chargers, particularly the half-wave types, give a pronounced pulsating current. However, this pulsating current will charge batteries

as would the non-pulsating current which is delivered by a d-c. generator.

The rated output of these rectifiers is based on direct current instrument readings, which give the average value of the voltage and current. A direct-reading ammeter indicates the true current, which is effective in charging the batteries.

There are various types and sizes of tungar rectifiers capable of

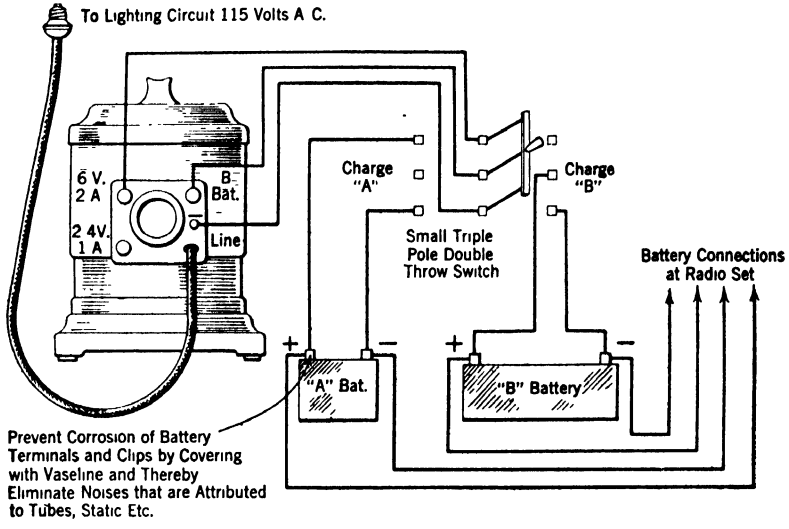

FIG. 80.—A permanent charging installation for "A" and "B" batteries.

charging one 7.5-volt storage battery at 2 amperes up to the types large enough to charge ten 3-cell batteries at 12 amperes or twenty 3-cell batteries at 6 amperes. The tungar bulbs range in size from $\frac{1}{2}$-ampere capacity on 7.5 volts to 6 amperes at 75 volts and 30 amperes at 50 volts. The 2 and 5 ampere sizes are designed to charge up to 120-volt "B" batteries at a low rate.

Fig. 80 shows the tungar connections for charging both "A" and "B" batteries.

CHAPTER VIII

METERS

Galvanometer.—The galvanometer is a current-detecting instrument which measures a current by its electromagnetic effect. Galvanometers are employed for detecting the presence of an electric current in any circuit, and for determining its direction and strength. In its simplest form, as shown in Fig. 81, the galvanometer consists of a small iron needle pivoted in the center of a coil of wire, *C*. The needle is controlled by the earth's field and points north and south when at rest. When an electric current is passed through a galvanometer winding, the needle is deflected over a graduated scale, the extent of the deflection depending upon the force of the current. The galvanometer is connected in series with the circuit and is so constructed that the needle will be deflected in one direction when the current flows through the coil winding in one direction or, practically speaking, from positive to negative. When the e.m.f. is reversed, from negative to positive, the needle is deflected in the opposite direction. The galvanometer will measure very small values, and is a most sensitive current-measuring device. The deflection of the needle is due to the electromagnetic field created by the passage of electric current through the coil of wire.

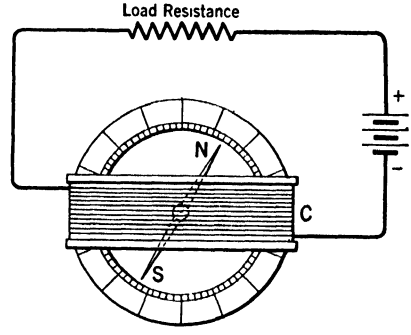

FIG. 81.—Galvanometer connected in a simple d-c. circuit.

Voltmeter.—The d-c. voltmeter, a simple drawing of which appears in Fig. 82, is an instrument for measuring the voltage drop or potential difference in a circuit. In electrical parlance, it is used to measure the voltage of the circuit. It always is connected in parallel.

Referring to the drawing, Fig. 82, it will be observed that a rectangular coil of wire, *A*, mounted over the metal core *C*, is supported by delicate bearings and maintained in the zero position of the scale by the springs, through which the circuit of the coil is completed.

When the pointer is in zero position the coil rests at a slight angle to the poles of the permanent magnet, N, S. When current is flowing in a circuit containing the voltmeter the normal magnetic field from N to S expands, and in passing from N to S the lines of force turn the coil. When the tension of the spring is equal to the pull of the magnetic field the pointer on the scale comes to rest, giving the voltage reading. A resistance coil, R, usually mounted within the meter case, is connected in series with the metal core C to reduce the flow of current to a minimum value. The resistance of this coil is about 150,000 ohms where a maximum of 150 volts pressure is maintained. This resistance is known as a "multiplier."

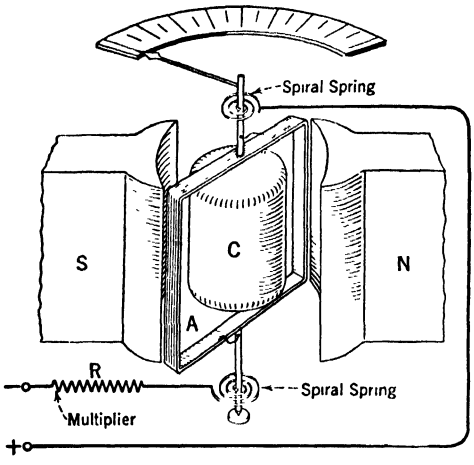

FIG. 82.—Illustrating the operation of a d-c. voltmeter.

Ammeter.—There is essentially no difference in the construction of the ammeter, as shown in Fig. 83, and a voltmeter, except the resistance of the windings and the calibration.

The ammeter is always connected in series with the circuit and between the source of power and the apparatus receiving the current, because the current to be measured in any circuit must flow through the ammeter. If very large values of current are to be measured, an external shunt, consisting of several metal

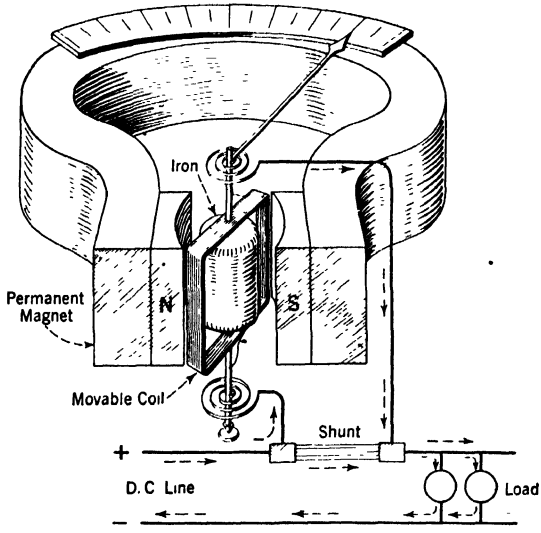

FIG. 83.—Showing the general construction of a d-c. ammeter used with a shunt resistance.

strips of comparatively low resistance, placed between two copper lugs, is connected across the terminals of the ammeter. When the shunt is employed a potential difference exists across the terminals of the shunt, with the result that a certain amount of current divides and a small part flows through the ammeter. An increase of current through the shunt will increase the flow of current through the meter, hence it is calibrated to read very large values of current, although only small values actually pass through the instrument.

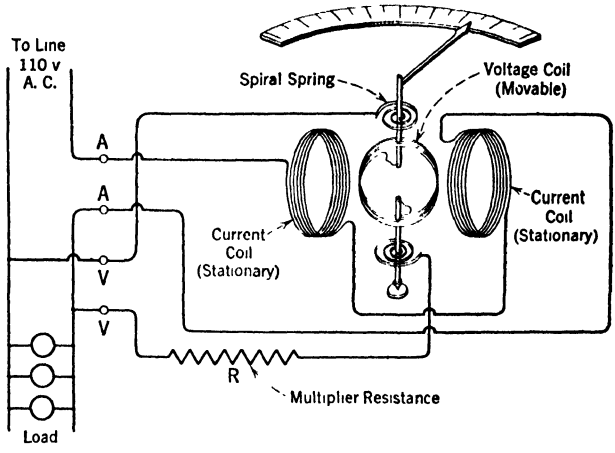

FIG. 84.—The component parts of a wattmeter connected in an a-c. circuit.

Wattmeter.—A wattmeter, shown in Fig. 84, may be considered as a combined ammeter and voltmeter. It is designed to measure the power being expended in an electrical circuit.

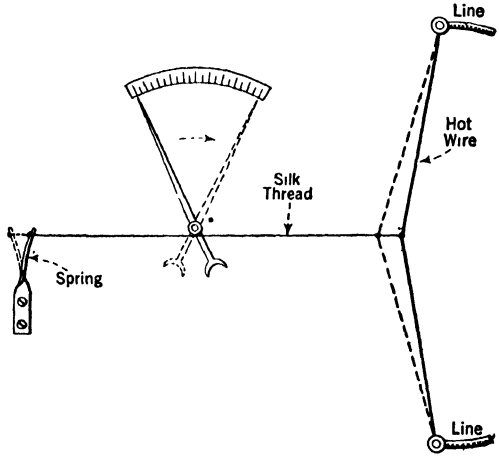

FIG. 85.—Hot-wire ammeter. (Radio-frequency ammeter.)

A wattmeter differs from the voltmeter and ammeter in that it requires no permanent magnet, but has only the two magnetic fields. The ampere coil (the stationary coil) is wound with a few turns of heavy wire having a low resistance. The volt coil (the movable one) is wound with several turns of very small-gauge wire and connected in series with a high resistance. The terminals of the coils are brought out to independent binding posts marked *VV* and *AA*.

In this meter the ampere (current) coil is connected in series with the line; the volt coil is connected in shunt. The position of the ampere coil is fixed, but the volt coil is mounted on bearings and fitted with the pointer, which is held at zero on the scale by the spiral springs. The current in the volt coil will vary as the potential difference between its terminals. The current through the ampere coil will vary as the current varies in the circuit in which it is inserted. The force acting upon the movable coil will be proportional to the product of the current and potential difference. That is, the deflection of the coil is proportional to

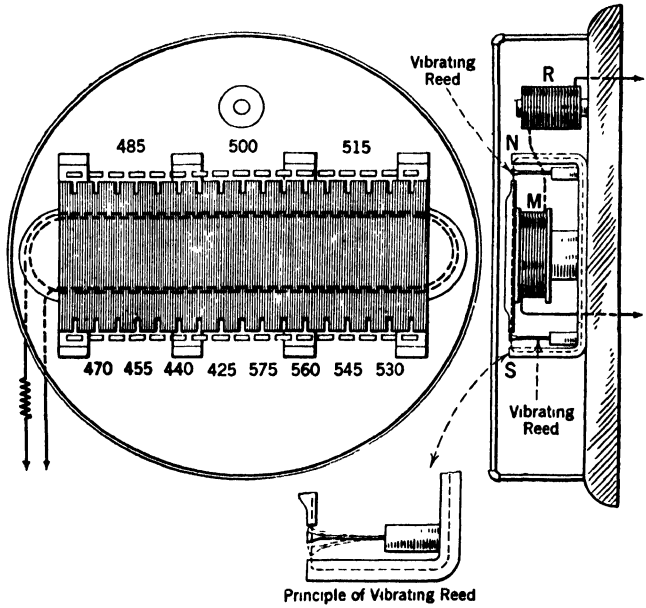

FIG. 86.—Magnetic reed type frequency meter.

the power of the current flowing in the circuit. The scale of the meter is calibrated directly in watts.

Watts = Volts × Amperes × Power Factor.

Hot-Wire Ammeter.—The hot-wire ammeter, the mechanism of which is shown in Fig. 85, depends for its registering action upon the expansion of a wire under the influence of heat produced in it by the flow of the current to be measured.

Hot-wire ammeters are particularly suitable for current measurement at radio-frequencies. Measuring instruments possessing cores or coils of wire are not adaptable for radio-frequency measurements, not

only because the current of high voltage and high frequency would burn out the coil, but because the length of the windings would seriously affect the oscillating properties of the circuit.

In the diagram, Fig. 85, the current to be measured passes through the *hot-wire*, causing it to expand. In so doing slack is given to the silk thread which is immediately taken up by the spring, causing the silk fiber to rotate the shaft which carries the indicating needle.

Frequency Meter.—Except in the more elaborate installations, frequency meters are not employed in commercial radio transmitters.

The magnetic reed type of frequency meter shown in Fig. 86 has a single magnet winding, M, joined in series with the coil R. The soft iron core at the left of M completes the magnetic circuit for the poles of the horse-shoe magnet, N, S. A number of small vibrating reeds are placed directly in the path of the flux between the soft iron core and the poles of the magnet. Each reed has a different period of mechanical vibration and is placed in a state of vibration by the flux of the magnet, when the flux alternates at rates to correspond to the natural mechanical period of the reed.

The permanent magnets, N, S, etc. (only one of which is completely shown) constantly keep the core magnetized, but when alternating current flows through the magnet, M, the reed, having a natural period corresponding to the particular frequency of the current flowing, will be set into rapid vibrating motion. The reading on the meter scale which corresponds to the vibrating reed is the frequency of the circuit under measurement. The frequency meter is connected in shunt to the terminals of the alternator.

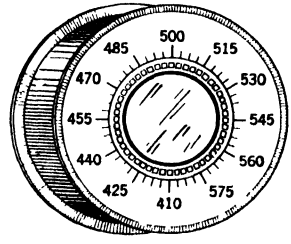

FIG. 87.—A type of frequency meter used in a-c. power circuits.

Another type of frequency meter, which operates similarly to the one just described, indicates the frequency of the circuit under measurement by direct observation of the vibrating reeds on the face of the meter, as represented by the small squares in the sketch, Fig. 87.

In this meter, an alternating current, the frequency of which it is desired to measure, is passed through a small electromagnet in the field of which are arranged a number of thin steel strips, known as *reeds*, which, in turn, are so adjusted that they vibrate only at certain frequencies. When a current passes through the electromagnet, the reed which has a frequency nearest to the frequency of the alternating current will vibrate. Each of the reeds will vibrate when the frequency of

the alternating current corresponds with their natural periods of vibrating frequency. However, all the reeds will not vibrate simultaneously, but it may occur that the reeds on either side of the correct reed will be put into slight motion if their natural periods are near that of the correct reed, but the accurate reading is obtained from the reed which vibrates with the greatest amplitude.

CHAPTER IX

ALTERNATING CURRENT AND FREQUENCIES

Review.—In Chapter XI, on Vacuum Tubes, the accepted theories governing the atomic structure of the ninety or more elements known to science are explained, and with special reference to the positive and negative quantities of electricity which, combined in balanced quantities, constitute an atom. It is assumed that vast numbers of electrons, usually identified as *free electrons*, will move through a conductor under an applied electrical pressure, or electromotive force, the practical unit of which is the volt.

The electrons move through the electrical conductors forming the circuit from one point to another. The two points are those in the circuit between which there is a difference of potential. This movement of electrons from one point or place to another through a circuit is *current flow.*

A unit quantity of electricity is a *coulomb* and the rate at which a certain number of coulombs will pass a given point in a circuit is termed an *ampere.* If a pressure or electromotive force is maintained, the electrons will continue to move around through the circuit from the point of applied force, or pressure, returning to the point from which they started. (See Fig. 88.)

The electrical pressures or e.m.f.'s in modern radio circuits and their associated power circuits are obtained principally in the following ways: (1) from generators; (2) storage and dry batteries; (3) electrolytic action; (4) due to the transformations of energy through the phenomenon of electromagnetic induction; and (5) due to electrostatic induction by the employment of condensers or capacitors.

The movement of electrons under an applied e.m.f. is the current flow, mentioned heretofore; the unit quantity of current is the coulomb, or 628 million-million electrons multiplied by ten thousand. One ampere is said to be flowing in a circuit when one coulomb of electricity passes a given point in one second, the electrical unit of time; i.e., the time required to accomplish a certain amount of electrical work.

Whenever current flows through a conductor it is accompanied by magnetic lines of force existing in the space surrounding that conductor. The strength or magnitude of these lines of force depends partly upon

the strength of the current for which they are accountable. Hence, for any variation in the current strength, or number of amperes flowing, we naturally expect the magnitude of the lines of force to change. These preliminary facts are of importance because the theory of alternating current is based upon what naturally occurs in or surrounding a circuit whenever currents change in value, or in direction of flow, and the resultant effects which the changes in the magnetic field will develop within the circuit that produced the field or in a neighboring circuit. It will be seen later that the effects are considerably influenced by both the current changing in value and the number of times that the current

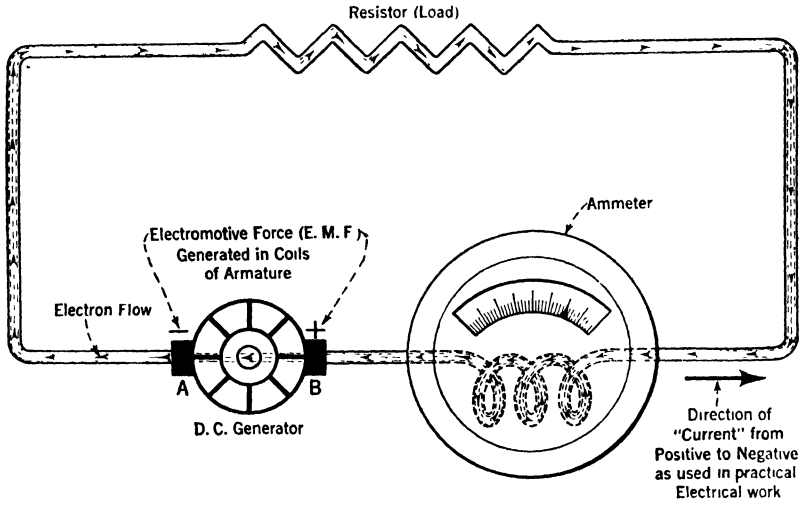

FIG. 88.—Showing the "electron drift" through an electrical circuit caused by a difference of potential across the armature coils.

will flow back and forth in one second, as in the case of an alternating current.

Hence, at the very beginning of alternating current theory we are interested in three factors, none of which can be individually effective upon the circuit unless the others also are taken into account. These factors are: (1) the strength of the current flowing at any particular moment; (2) the strength of the magnetic field about any conductor (or a conductor wound in the form of a coil); (3) the rate with which the current will change its direction of flow every second; that is, the number of complete reversals of current flow per second. This rate or reversal is known as the *frequency* of the alternating current.[1]

[1] The difference of potential (electrical pressure) is measured in a given number of volts applied to a circuit, and opposite signs, positive (+) and negative (−), are

Voltage and difference of potential are not quite synonymous, but for practical discussion we can assume that any force or pressure necessary to do work, electrical or otherwise, requires a difference of pressure level. This matter of pressure may be better understood by visualizing a simple comparison with a large tank holding water, as shown in Fig. 89. The size of the tank and height of the water in it determine the weight of the water and the pressure that it exerts on the bottom of the tank. On the surface there is actually no pressure, other than atmospheric pressure. This level is analogous to potential. Between the surface and bottom we might assume it to be 100 lb., that is, the pressure difference between the surface and bottom is 100 lb. This is analogous to the term " difference of potential."

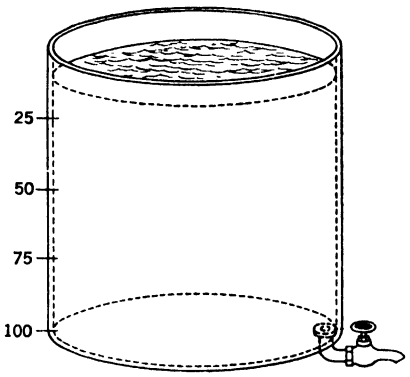

FIG. 89.—Illustrating pressure levels in a tank of water. This is a simple analogy for the difference of electrical pressure in a circuit

If a pipe is connected to the bottom of the tank and the valve is opened, water will run through it. The quantity of water, or rate of flow every second, from the tank is determined principally by the pressure and the opposition which the water flowing through the pipe must overcome, such as the size of the pipe, the smoothness or roughness of its walls, angles or bends, or other obstruction. It can thus be said that the pressure exerted by the weight of the water is being used to overcome the oppositions in the pipe line in forcing water through this line. An analogy is an electrical circuit where the e.m.f. is applied to a circuit, and this pressure is continually overcoming the opposition of the circuit in forcing an electronic movement or conduction current through it. If the oppositions presented by the conducting circuit are very great, little or no current will flow, even though the pressure is steadily applied. The *oppositions* presented to current flow form the major part of alternating current theory.

used to designate the direction of this force. These polarity signs are purely relative ones and at the present day are employed only as a practical means to identify either the positive or the negative side of a circuit. The electron theory is not considered when explanations of practical usefulness are given. Continuing, the opposite signs indicate the two sides of a circuit across which the source of e.m.f. is connected.

Alternating Current.—A clearer conception may be gained from the explanations to follow on alternating current and their behavior under the voltages applied, if one visualizes the current as a stream of millions and millions of little negatively charged particles moving in a straight wire, or wire wound in the form of a coil, or in any other electrical conductors. It requires *force* to start this mass in motion and keep it moving. The direction in which the mass moves is the same as the applied force, and if the pressure is reversed the mass also will change its course and move in the opposite direction.

NOTE: Negative electrons are not created; they exist in all wires and electrical conductors, as well as in all materials in varying quantities, and they can be set in motion under an electrical pressure.

A direct current flow is a movement of electrons in one direction only, from *A* to *B* as shown by the small arrows in Fig. 88, when the e.m.f. causing the flow is applied steadily in one direction. However, the pressure may be increased or decreased, resulting in more or less current flow, but the direction of flow will not be changed. In this case the quantity or number of amperes will simply vary with the change in e.m.f., providing, of course, other conditions remain equal. Direct current, which continually varies in strength but not in direction, is called a pulsating direct current.

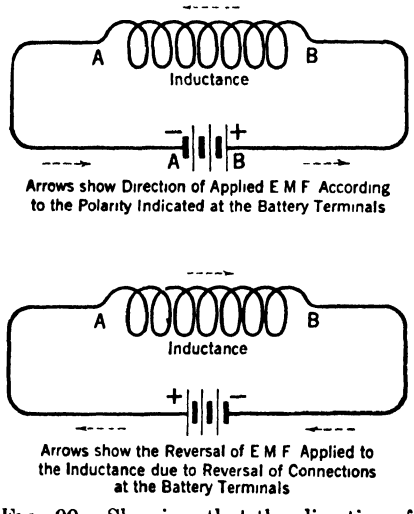

FIG. 90.—Showing that the direction of current flow is dependent upon the polarity of the applied e.m.f.

When the pressure or e.m.f. applied to a circuit is reversed, the current flowing in the circuit will also reverse its direction. This is shown in Fig. 90. Let us suppose that wire *B* is alternately placed at positive and negative potential, and wire *A* also is alternately changed from negative to positive. Consequently, the current will flow through the circuit or coil from *B* to *A* in the first instance and from *A* to *B* in the coil in the second instance. If these connections are periodically reversed, the applied e.m.f. across the coil will reverse and the current flow will likewise periodically alternate. It does not follow that the current will cease flowing at the precise moment that the pressure is stopped, that is, at the instant when the e.m.f. is undergoing the reversal from a positive to a negative direction.

The following mechanical analogy will prove that matter set in motion requires a period of time to come to rest or reach a state of equilibrium. (Refer to Fig. 91.) For example, (1), a pendulum which has been raised and then released will swing back and forth several times before stopping. If, however, one should constantly strike the pendulum a blow of equal intensity exactly at the top of every stroke, at points *A* and *B*, where the reversal of motion takes place, the pendulum would continue to swing back and forth, always stopping and beginning the motion at the same place. This is a reversal of motion with the reversal of force applied, both being in step or unison. (2) Now, if one were to strike the pendulum a blow downward before it reached its upper limit of travel, the force of the blow would partly overcome the force which the pendulum carries, due to its weight and speed (inertia). The two forces being opposed then would cause the resultant movement of the pendulum to change and it would swing about erratically. The action in the first case (1) is similar to an alternating e.m.f. when applied to a circuit which embodies only resistance. The movement of the current as it reverses in a circuit of this kind will be in unison or in phase with the e.m.f. The action in the latter case (2) applies to an alternating current circuit where the applied e.m.f. must overcome, in addition to the resistance of the circuit, e.m.f.'s or forces termed induced e.m.f.'s, which develop in the circuit or parts of the circuit. The current now flowing will depend upon whether the induced e.m.f.'s are counter to or assist the applied voltage of the line and the relative magnitude of each.

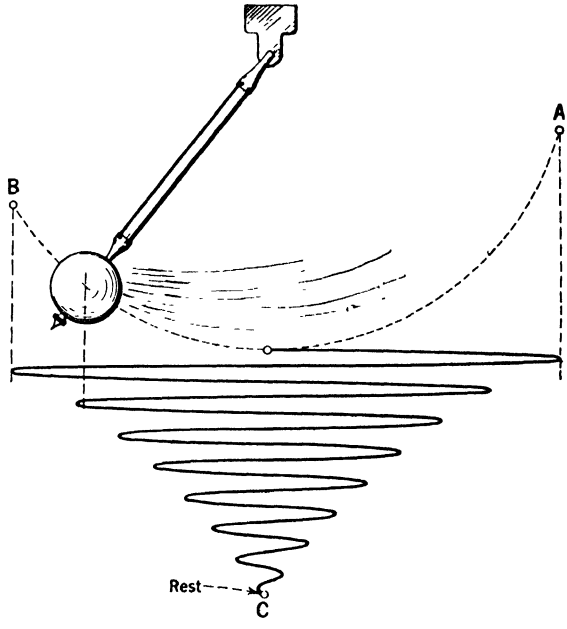

FIG. 91.—Illustrating the phenomenon of inertia.

Since the laws of actions and reactions that go on in alternating current circuits are similar to nature's laws governing inertia, there are

many analogies which can be given to clarify the principles of electrical theory. The analogies generally used are hydraulic and dynamic. The hydraulic shows the flow of water under given pressures and the dynamic represents the motion of bodies through space or along surfaces under given applied forces and the forces which they develop due to their motion. The following discussion is based upon the reactions set up due to the energy possessed by moving bodies. The water analogy is good only for a direct current flow, while the analogies made with moving bodies are better suited to alternating current.

A mass or object may be set into motion, and if the oppositions which resist the movement are not great the object will move freely and perhaps ahead of the pressure or force which caused the motion. For example, an automobile running on a slight down grade will have a tendency to run ahead of or *lead* the motive power after momentum has been established. When running on the level a constant power applied will result in the maintenance of a uniform speed, whereas on an upgrade the forces to be overcome are greater and the automobile will slow down or *lag* behind the motive power. It may actually stop if the grade is very steep, even with full power applied. The combined forces which impede the progress of the automobile and which must be overcome continually while it is in motion are the oppositions presented by gravity, weight of the vehicle, friction, road traction and wind resistance. All together they have a definite relation to the speed of the automobile for the power applied.

For a simple comparison let us call the movement of the automobile the *current*; the force required to move it and the forces acquired from its inertia the *voltages*, and the total oppositions to be overcome the *impedance*. In the foregoing analogy of the automobile the terms *lag* and *lead* were used to express relative *motion* and *power*, and in the alternating current circuit the corresponding terms *lag* and *lead* are used to express relative current movements with the impressed e m.f.'s. Phase relations exist when current either lags or leads the voltage. Current, voltage, and impedance relations are continually changing in a circuit when the impressed voltage is alternating, because it is both continually changing in intensity and periodically changing its direction. It is advisable, therefore, before continuing further, to review in a short discussion one complete cycle of alternating current flowing under one cycle of impressed alternating e.m.f.

Cycle—Frequency—Time Period.—One cycle of alternating current is graphically shown in Fig. 92, where each one of the perpendicular lines, called *ordinates*, indicates by its respective height the value of the current at any particular moment during the series of current changes

throughout the cycle. When the alternating voltage is impressed upon a closed circuit, current begins to flow, starting at a zero value and gradually increasing in strength until a maximum value is reached, after which moment there is a gradual decrease of the current strength back to zero. A rise and fall of current, called an *alternation*, has occurred in one direction, which we may arbitrarily call a positive direction.

The direction in which the e.m.f. is applied now undergoes a reversal, and, as a consequence, the current will begin to flow in the opposite direction, increasing from the zero value to the maximum and then decreasing again to zero. The rise and decay of current during the last half-cycle is called an alternation in the negative direction. The two

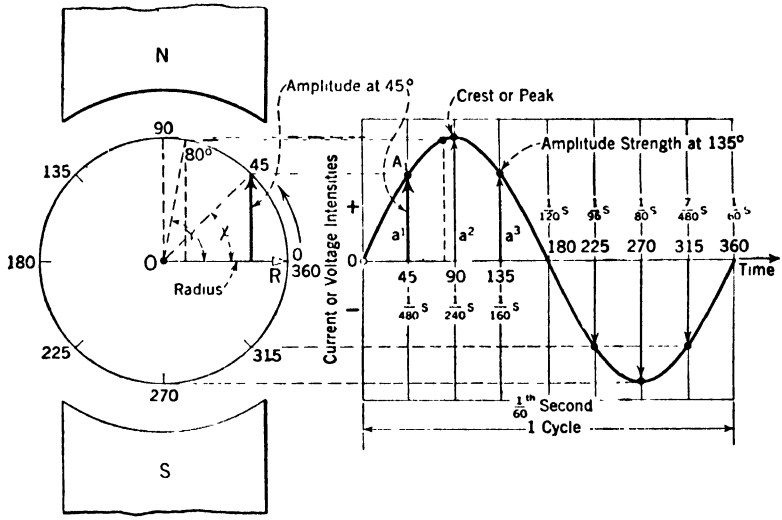

FIG. 92.—Sine curve depicting one cycle of 60 ~ a-c.

alternations constitute the cycle and the length of time required to complete the full cycle is termed the *time period*. The number of cycles of current that will flow during a period of one second, the electrical unit of time, is known as the *frequency* of the current. If the time period is $\frac{1}{60}$ second, as in a power circuit, the frequency is 60 cycles, or if the time period of the current is 1/1,000,000 second, as for instance in a radio circuit, the frequency will be 1,000,000 cycles. Since 1000 cycles is equal to 1 kilocycle, we may express the latter frequency as 1000 kilocycles, which is a more convenient unit for the frequencies of the higher orders. (Refer to Fig. 93.) During each reversal of the alternating current flow one could list the full set of increasing and decreasing values if measurements could be taken at regular intervals. In

the same manner, if the changes of e.m.f. throughout the cycles could be measured at stated intervals a complete set of various values could be compiled. A complete course of events is called a *cycle*, and in the measurements of electrical energies a complete set of values is also called a cycle.

The representation for mathematical computation of a cycle of current or e.m.f. can be graphically shown, as in Fig. 92, by first describing a circle. The distance around a circle measured in degrees is 360°. All of the electrical degrees will represent the intervals of time referred

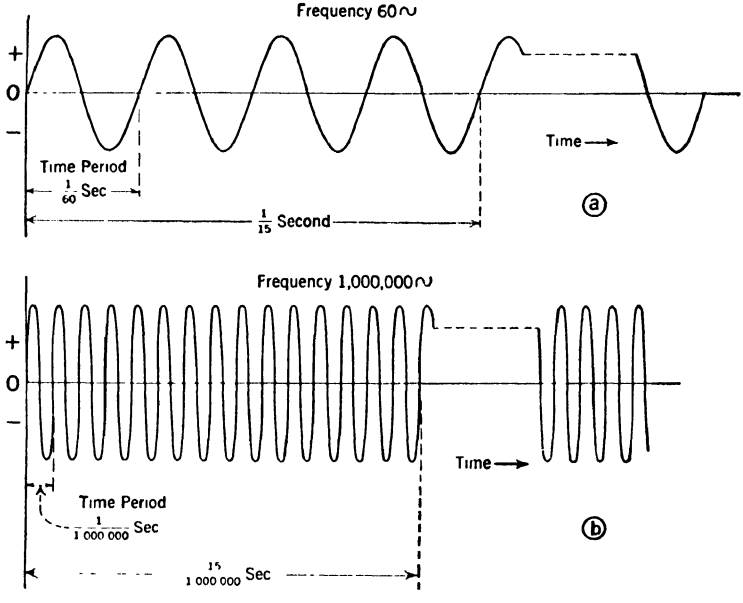

FIG. 93.—Showing the time periods of a low frequency and a high frequency alternating current.

to and illustrated as amplitudes. When not in phase, current either lags or leads the voltage by a definite time. This is shown in degrees, and lines drawn from the different points on the circumference of a circle through its center form angles with the vertical lines representing the amplitudes as indicated by angles X and Y. The difference in phase, or this difference in time between the flow of current and the impressed voltage, is developed from the fact that a cycle of electrical energy can be and is called a movement of 360°.

Positive and Negative with Regard to A.C.—In alternating current theory the terms positive and negative are used to indicate the direction of the current at any time throughout the cycle. But these polarity

designations are only relative, because the current is periodically reversing in direction. This differentiation between positive values and negative values in alternating current is especially important when plotting a graph or drawing a curve in order to show that changes occur on each side of the zero axis.

Meaning of Phase.—Phase is any point in the 360° of a wave form used to represent a cycle of either current or e.m.f., and it can be taken as the intensity of the current or voltage at that particular moment called *time instant*. If the maximum voltage is attained at 90° whereas the current reaches its maximum value at 89° the *difference in phase* is 1°. The convenience of this means of expression is apparent, for while the time required to complete one cycle will vary for changes of frequencies, the units of the angles formed by the difference with which current either leads or lags voltage will not change.

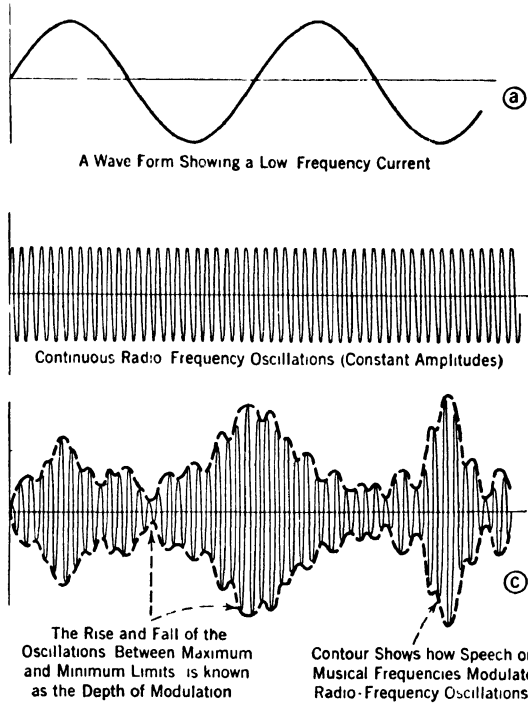

FIG. 94.—These curves graphically represent three different forms of alternating current.

The curve illustrating a cycle of alternating current has a characteristic shape, called its wave form. A sine wave is one which gradually rises and falls, following a definite law by which mathematical deductions can be computed easily. Curves with abrupt or irregular changes are not pure sine curves. Three curves are shown in Fig. 94:

(a) The sine wave of alternating e.m.f. which a modern generator produces (actually a pure sine wave is not generated).
(b) Wave of alternating current, in a radio-frequency circuit.
(c) Alternating current having a modulated wave form.

Since it is difficult to give a simple mechanical analogy for *difference*

in phase it may be advantageous first to state the electrical purpose. The analogy is based upon the fact that when an electromotive force is applied to a circuit, energies in other forms are produced for a moment which later are given up and returned to the circuit, resulting in reactions occurring therein. It is the process of *applying energy, storing it and releasing it.* The time between each cause and its effect will vary according to the rate at which the energies attempt to change. As a matter of fact, all electrical work done is a resultant after all the oppositions which resisted the accomplishment of the work have been met and overcome. Oppositions which are great will slow up or retard the energy changes, whereas oppositions which are low will permit faster and more complete energy movements, resulting in production of increased power in the circuit. Again, considering the above statements from either the mechanical or electrical viewpoint, when a given amount of work is to be done in a specified length of time, the actual efficiency at which the work is done (the ratio of the input energy to the output or result) depends upon the magnitude of the reaction forces which

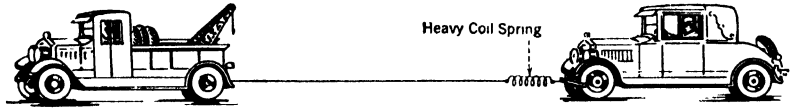

FIG. 95.—An analogy of applied power and resultant reactions.

develop and oppose the effort applied during the whole stated interval of time.

Resonance.—The question is simply one of application and result; the alternating voltage impressed upon a circuit is undergoing a series of intensity changes a given number of times per second. The conditions required may be summed up as follows: The design of a circuit must be such that it will respond vigorously to one particular frequency of the voltage and permit the maximum flow of current through the circuit during one alternation of e.m.f. before the next alternation of e.m.f. begins to act on the circuit. If the maximum flow of current is obtained as just mentioned, the circuit reactions will be low, and the circuit is then said to be resonant to that particular frequency of e.m.f.

For example, let us consider the following mechanical analogy. Reference to Fig. 95 shows an automobile linked to another car by means of a tow rope with a heavy spring connected at one end, where it is attached to the car to be towed. Suppose that motive power is applied to the first car and as it begins to move the spring is drawn out until fully stretched. If at the particular instant when the spring is at

its greatest tension the first car should stop, the spring, if strong enough, would begin to recoil, or contract, pulling the second car into motion. Now, even after the spring gives up its energy, the towed car will perhaps roll a few feet farther, due to its inertia, and the actual distance that it continues to move depends upon its weight, road friction and all other oppositions that might tend to check its motion. The latter movement is a reaction of the original force. The *time element* enters into this sequence of energy changes because the spring must store up energy and return it upon recoil after the stretching force (the power of the tow car while in motion) is removed. We will suggest several changes in the above conditions and the mechanical reactions expected will be apparent to any observer.

The first car may be brought to a stop so suddenly that the towed car will strike it before the latter stops rolling, due to its momentum; this impact may, or may not, have sufficient force behind it to set the first car again in motion without the use of its own motive power. Again, the towed car may only roll up to the tow car and stop just before striking; in this case no secondary force or reaction occurs that might tend to create additional forces.

It may be shown that if an operator applied power to the tow car in such a way as to impart to it a movement of a few yards at regular intervals, the spring reaction would cause the towed car also to start and stop at the same regular intervals, but while the two cars may have the same frequency of motion, they may not necessarily move at the same instant. They are not in time—not in step—and electrically we would call such a condition existing between an applied electromotive force and the resultant flow of current the phase difference, or say they were *out of phase.*

If the reader will classify in his mind the five following main factors that are always present in any exchanges of force or power it will assist greatly in analyzing the action with its reaction: (1) the pressure or applied force: (2) resulting forces; (3) physical size or electrical measurements of the parts involved; (4) element of time; (5) oppositions in general.

Outline for Analyzing Forces Versus Reactions, or How to Tie Up a Cause with its Effect.—(1) There is the necessary pressure or force called the e.m.f. which must be impressed across the terminals of a circuit to operate it; i.e., in order to cause a flow of current. This force is called the *line voltage* or applied or impressed e.m.f.

(2) The energy possessed by a circuit which contains inductance is in the magnetic field surrounding that inductance. When the circuit contains capacity there is the electrostatic field energy which a charged

condenser holds. Energy is always returned to a circuit when the original force is removed, because a magnetic field is dissipated, or changes in magnitude, thus causing a new e.m.f. to be induced in the circuit. Also, the discharge of a condenser will produce a new e.m.f. in a circuit when the charging e.m.f. is discontinued.

(3) The physical quantities of a circuit are made up from the various pieces of apparatus used, together with the conductors or leads which connect the parts together. The rated size of a coil, its inductance value in henrys or the rated capacity of a condenser in smaller units of a farad, the microfarad, or the number of ohms of resistance in a given resistor or rheostat, are not physical quantities nor mechanical dimensions, but relate to the electrical rating characteristics of the parts or apparatus.

When we speak of the inductance of a circuit in a practical way we include only the inductive effects of the coils or windings used. When referring to the capacity effects we generally consider only the capacitance furnished by the condensers used. We do not consider as a general rule the fact that there are both inductive and capacity effects ever present in the remaining portions of the circuit which physically have no similarity in appearance to that of a coil or condenser. In critically designed circuits, however, these added effects must be included when computing the entire circuit constants. To clarify this statement the following reasons and illustrations are given. The self-inductance of a coil will produce a high opposing pressure, which is described as reactance voltage. Reactance voltage is the effect produced upon a circuit due to the concentration of a large magnetic field building up around the winding of the coil when current flowing through it changes in value. There is also in evidence, but to a much less degree, this same reactance effect due to the self-inductance of every straight wire or conductor used to complete or form the electrical circuit. In the same manner, the capacitance of a circuit must include not only the condensers that are connected in the circuit, but also that capacity represented by any other part of the circuit that would act to give that part of the circuit the *effect* of a tiny condenser connected at that particular place. This effect is called *capacity effect.*

For example, the insulation material that covers and separates two adjacent turns of wire in a coil or inductance will have all the characteristics of a dielectric, capable of being charged electrically, due to the difference of potential existing between any two adjacent turns of wire when current flows through. The effect extends along the entire length of the coil, from turn to turn, and from this there arises the term *distributed* capacity of a coil or inductance, as though a condenser was

connected across the winding, to the terminal wires. Note the relation in Fig. 96.

Under certain conditions, especially when a radio-frequency current

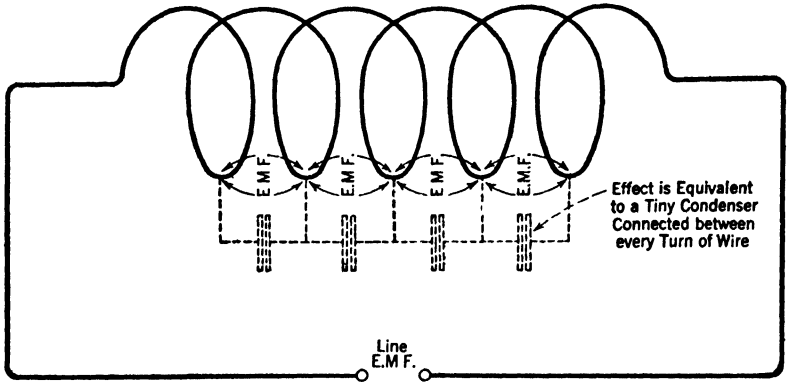

FIG. 96.—Showing "capacity effect" between the turns in an inductance when current is flowing.

is flowing, an inductance may have sufficient distributed capacity to change the circuit reactance and thereby affect the flow of the current. It may be seen that an individual part primarily used to add inductance to a circuit can play the part of a condenser in the circuit at the same time.

The vacuum tube also presents a similar condition, for while it is not in any sense ordinarily used to supply capacity to a circuit, yet it does so, because the two elements (the grid and plate), are separated and the intervening space becomes a dielectric which is electrostatically charged when an e.m.f. or potential is impressed upon the two mentioned electrodes. Exactly the same effect exists between the grid and plate as would be obtained if a very small-sized condenser of approximately 0.000008 microfarads (8 mmf.) capacity should be connected between these two points in a receiving tube when in operation (Fig. 97).

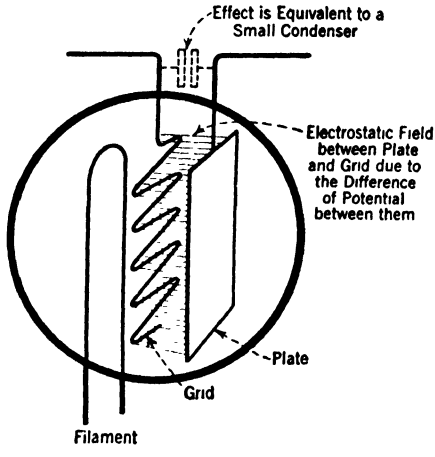

FIG. 97.—Illustrating capacity effect in a vacuum tube when in operation.

(4) The fourth factor, found in all energy movements, is the time element—that difference in time between a cause and an effect. For instance, the time element is introduced whenever the current lags or leads the voltage, due to the reactance in a circuit. We know that the energy in either an electromagnetic field or an electrostatic field is returned to a circuit at intervals. The intervals, representing the time element, are due to the fact that an alternating e.m.f., impressed from some source upon a circuit, will periodically change according to its own frequency, irrespective of how long it might take the current to reach its highest possible value. It requires a definite length of time when current flows through a given inductance to create a maximum mag-

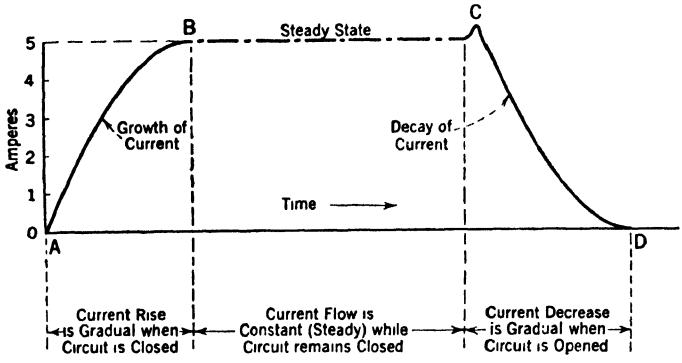

FIG. 98.—Diagrammatical method of showing the characteristics of self-inductance in a d-c. circuit only when the circuit is closed or when it is opened.

netic field, or a certain length of time to charge a given condenser to its highest capacity.

(5) The fifth factor covers the different oppositions that are presented. In a circuit including inductance, the growth of the current is not instantaneous when an e.m.f. is first applied, as shown by the curve in Fig. 98, but *the current* must follow a gradual increase because of the counter effect of the reactance voltage developed in the inductance, due to the action of the magnetic field as it builds up and cuts its way through the turns of wire. This counter e.m.f. or reactance voltage is due to the self-inductance of the coil and circuit, and is the opposition which the inductance presents. This is called *inductive reactance.*

There is also another opposition, called *capacitive reactance,* which is always present when condensers are connected in a circuit. The capacitive reactance is in the form of a voltage which the condenser develops while a charging current flows into it, but not through it.

The remaining form of opposition to be considered is the resistance

that the metal conductors offer to current flow, which is sometimes called the actual *circuit* or *ohmic* resistance. When there are no reactance effects, resistance is the only opposition present. This, of course, is a theoretical condition in an alternating current circuit. The resistance is largely determined by the length, gauge and material of all of the wires or conductors used to make up the circuit. In an alternating current circuit we often refer to its ohmic resistance as its d-c. resistance, meaning the resistance which the circuit would offer to a direct current of equal value. The dissipation of energy, due to resistance in either alternating or direct current circuits, is mainly in the form of heat, which gives us the only common basis upon which both currents are comparable. (Refer to Effective E.M.F. in A. C. Circuit later in this chapter.)

Combining all of the observations outlined above in a discussion of alternating current circuit conditions we have:

(1) When an alternating current circuit has a large inductance value and a small capacity value, the circuit will have a high inductive reactance. Its *choking*, or retarding, effects upon the current flow will be increased because of the large magnetic field which builds up around the inductance and tends to prevent the current from changing in value.

(2) When a circuit has a very high capacitance, but a correspondingly low inductance, the capacity reactance of the circuit is increased and the choking or lagging effect of the current is lowered. This is explained by the fact that in an *all capacity circuit* (a theoretical case) the current will lead the voltage.

(3) The practical point in question now is to provide a circuit which has neither a predominance of capacity or inductance, so that the inductive reactance and the capacity reactance may be nearly balanced, thus reducing the losses when there is a leading or lagging of current flow. An equal amount of inductive reactance and capacity reactance will reduce the reactance loss to zero and cancel this *opposing factor*. With the reactances exactly balanced the only opposition which remains is the actual ohmic resistance.

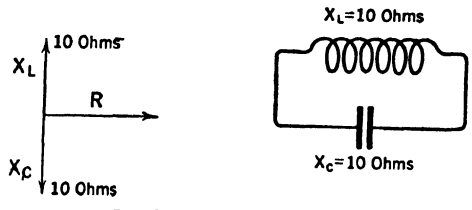

FIG. 99.—If the reactances of a circuit are equal, the only opposition then present is the actual ohmic resistance.

In order to illustrate these points graphically we must employ a diagram as in Fig. 99. Let us suppose that the inductive reactance of a circuit is 10 ohms and the capacity reactance also 10 ohms; the differ-

ence then between the two reactances will be zero, and they cancel each other. This is an ideal condition not really accomplished in practice. From the vector diagrams it is seen that an alternating current circuit without reactance has no current lag. This is called *zero angle lag.* No angles are formed when a parallelogram cannot be drawn. The parallelogram is useful in showing that although resistance and reactances both oppose current flow, they do not exert their influence in a way that might be expected at first sight. Without entering into explanation of the trigonometric functions, this simple point is understood by referring to the table of trigonometric functions in the Appendix. Notice that zero angle lag is indicated by figures in an adjoining column, under the head of *power factor*, and is given as 1.000. From this we conclude that in a strictly resonant circuit, where the reactances are exactly balanced and resistance is the only opposing factor, the true watt power P is equal to the product of the current I and the voltage E or:

$$P = I \times E \times (PF)$$
$$P = I \times E \times 1$$

In this particular case the power factor ($\cos \phi$) equals 1. Hence, the power in an alternating current circuit without reactance, if such a condition existed, would be computed the same as the power in a direct current circuit.

Let us keep in mind that no matter how great or small may be the reactance effect upon a circuit, the ohmic resistance is always present, and it may be either negligible or sufficiently great to influence the strength of the current flow. For example, a radio-frequency circuit may include both the use of an inductance, composed of a very few turns of wire, and a condenser. Under these conditions, the ohmic resistance is negligible. On the other hand, a circuit may comprise the use of a coil of inductance wound with a great many turns of wire, used primarily to increase the inductance of the circuit, yet the increase in the length of wire used must necessarily increase the circuit resistance.

When a resistance, such as a rheostat, or a fixed resistor, is placed in a circuit, this resistance is concentrated and will add to the resistance of the other conductors, referred to above, which is distributed through the circuit. Any resistance, or resistor device, added to an alternating current circuit places a load on the circuit in addition to the load which the circuit is already carrying, due to either the use of a condenser or an inductance. If the added resistance is large, the voltage on the line must meet this increase and a greater portion of the line e.m.f. will be applied in forcing current through it. If the resistance

added to the circuit is of low ohmic value then less of the line e.m.f. need be applied across it. That is, the voltage drop across the resistance will be less, thus allowing more of the line e.m.f. to be available at other places in the circuit. That *portion of the line voltage*, called *voltage drop*, which is required, is determined by the size of the resistance. This subject is covered fully under the caption "Voltage Drop across a Resistance," which follows.

Voltage Drop in Alternating Current Circuits—Inductance, Capacitance and Resistance.—It may be observed that the alternating e.m.f. applied to a practical circuit is used in *forcing* current either through a resistance, through an inductance, or to charge a condenser. In each case that portion of the line voltage necessary to do the work required is called the *voltage drop* across that particular part. If the inductance of a coil resists heavily any change of current strength it is called an impedance coil or simply reactor. Such coils possess a high inductive reactance or a large choking effect on the current. A large portion of the applied voltage is used in attempting to force current through a reactor, and this is spoken of in terms of the voltage drop across such devices. It is now evident that the amount of the voltage drop across any inductance in which a current is flowing is equal to the strength of the current times the opposition of the inductance, called its reactance.

The principles governing voltage drop also apply to the conditions existing in a direct current circuit, where, for example, the voltage drop across a resistance is equal to the product of $I \times R$; that is, current times opposition.

Similarly in an alternating current circuit containing a condenser the voltage drop across the condenser will equal the product of the current flowing times the condenser opposition. Condenser opposition is synonymous to capacity reactance or X_c.

Now since condenser opposition $X_c = \frac{1}{2\pi fC}$.

Therefore the voltage drop across a condenser E_c equals

$$\text{(current) } I \times \frac{1}{2\pi fC}.$$

That is:

$$E_c = \frac{I}{2\pi fC}.$$

From these observations it is apparent that the voltage drop of a condenser is directly proportional to the current I in the circuit, inversely proportional to the frequency f of the circuit, and also inversely proportional to the capacity C of the condenser. The *potential differ-*

ence across the plates of a condenser and *voltage drop* have the same meaning.

Capacity, inductance, and resistance all represent loads in a circuit, and each in turn exhibits its individual opposition to current flow. It may be seen that if we measure the voltage drop across every load in a circuit it will give us a fair indication of how the full voltage impressed upon the circuit is proportionately applied in overcoming these various load oppositions. These are practical considerations applying to alternating current circuits. The following paragraphs give more specific information.

Self-Inductance.—When the e.m.f. which forces current through an inductance is discontinued, the current also will stop (not instantly), because current flow cannot be maintained without electrical pressure. When the current begins to diminish, the magnetic field surrounding the inductance recedes upon the winding, and the lines of force must cut or thread their way through the turns of wire in their movement inward toward the coil. The cutting action of the magnetic field induces a new e.m.f. in the circuit, and current will then flow momentarily during the time this induced e.m.f. is being generated within the inductance, i.e., only while the magnetic field is changing in magnitude. It has been shown previously that when current increases in an inductance the magnetic field movement is outward, and the induced e.m.f. is then in such a direction as to oppose the e.m.f. which is causing the current flow. The induced e.m.f. thereby tends to prevent the increase. The cases just cited illustrate the effect upon an electric circuit which is called self-inductance.

Throughout every part of a circuit, even in the straight wires connecting the parts, the effects of self-induction are present, but they are *distributed.* A magnetic field or flux exists in the space surrounding every conductor carrying current. When the current varies, the magnitude of the flux also changes. Any variation in the magnetic field strength always results in the generation or induction of an e.m.f. within the wires or circuit which produced the field. The e.m.f.'s induced within a circuit as a result of its own self-induction reach high values only in inductances (not in straight wires), because the windings provide a greater concentration of the magnetic field forces.

The coils or windings used in alternating current circuits are classified under the general term *inductance.* A coil may be wound on a core of magnetic material, like soft iron (silicon steel), or wound on a tubing of non-magnetic or insulating material, or a coil may be wound in such a manner that it holds its own shape or form without the use of any tubing, and again, perhaps, only a very small supporting frame

may be utilized. All coils are said to have air cores when no iron is used. Again, all of the coils and conductors which form a circuit and carry the current are surrounded by magnetic fields which change in magnetic strength with any change in current in all parts of the circuit. The phenomenon whereby variations of magnetic field intensities generate or induce an e.m.f. in the circuit is called *electromagnetic induction.* The induced e.m.f. is always in such direction with respect to the increase and decrease of current as to apply its pressure to maintain a steady or constant current, tending to oppose either the increase or decrease.

The ability of a circuit to develop an e.m.f. within itself by electromagnetic induction is due to its self-inductance. (See Fig. 100.) When a magnetic substance like iron is used as the core of an inductance the magnetic field is intensified, because the iron sets up its own magnetic lines of force and in larger numbers than would otherwise exist if only an air core had been provided. This adds to the normal field around the coil and the total field strength is then increased. The inductance of any coil or circuit is increased when iron is used. Iron, having a higher permeability than air, will build up a strong field. A practical demonstration of this action is suggested in Fig. 101. There a 6-volt lamp is shown lighted from a 6-volt battery. If we open and close the switch quickly there will be but a very slight flash at the point of make

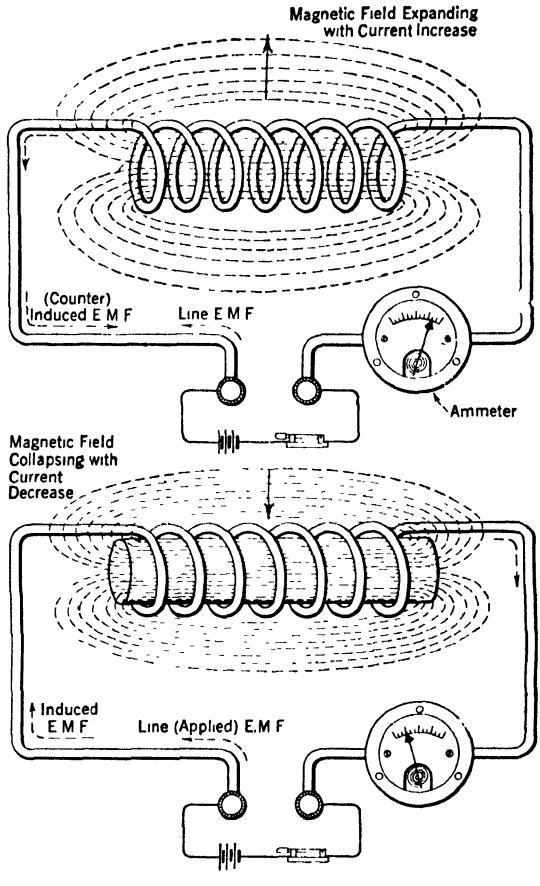

FIG. 100.—Demonstrating the momentary effect of self-inductance in a circuit when the current is made to undergo a change.

and break (where the blades of the switch separate), because the inductance of the filament wire is small. If, however, we add a small coil and again make and break the circuit, the flash or spark produced will be greater, because of the increased self-inductance of the circuit. Now suppose that we insert an iron core within the same coil and once more interrupt the current by opening the switch. This time the flashing or sparking across the switch contacts will be very much stronger. The spark in each case was produced by the self-induced e.m.f. generated when the magnetic field surrounding the inductance diminished in magnitude. The inductance, or rather the effects of self-inductance, tried to produce sufficient voltage in the same direction as the applied e.m.f. of the battery, to maintain the current flowing, that is, to perpetuate the current. Even though the battery e.m.f. applied to the line was discontinued when the switch was opened, the current continued flowing for an instant afterward. The induced e.m.f. proved to be large enough to break down the air resistance between the switch blades, with the result that the spark occurred momentarily while the magnetism was being dissipated. We know that a coil having a high inductance should produce a big flash in a test similar to the conditions just mentioned. Flash tests can be made in this way of iron core inductances to determine if their windings are opened or short circuited. This simple experiment shows convincingly the tremendous energy stored in the magnetic field.

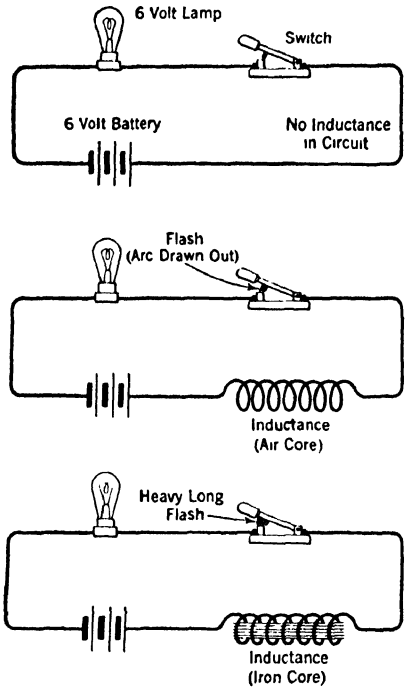

Fig. 101.—Illustrating the principle of self-inductance.

Summary.—In previous paragraphs the analogy of the automobiles was used solely to aid the reader in applying a line of reasoning when analyzing the fundamental principles in alternating current. There are three principal factors always to bear in mind—the variations in the relation of time, force and movement as shown mechanically. Similar conditions exist relating to time, voltage and current in an alternating

current circuit. Reactions always result in the generation of new forces.

Energy may be transformed from any of its forms into an equivalent amount of energy in any other of its forms. This is called *the law of the conservation of energy* and we find that it is carried out in all electrical actions.

Resistance.—When an alternating current circuit, Fig. 102, consists only of pure resistance, then practically no reactance effects take place. In this case there is no flux changing in inductances (coils), nor are condensers being charged and discharged. In the resistance circuit the rate of change of current would vary with and be proportional to the change of e.m.f. The relations of voltage and current would be similar to a direct current circuit.

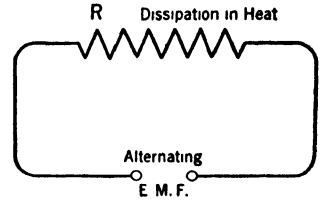

Although the current and voltage may not attain the same instantaneous values as they vary throughout the cycle, nevertheless they both start to increase at the same time, reach their maximum values at the same instant, decrease in unison and finally reach their minimum values together. This effect is shown in Fig. 102. The current and e.m.f. are then in phase; there is no phase difference between the two, and the relations are direct and follow the proportion as stated in Ohm's Law. Resistance in an alternating current power circuit of low frequency is always considered. But in a radio-frequency circuit it is not generally considered, except for precision measurements. Inductance and capacity alone govern conditions.

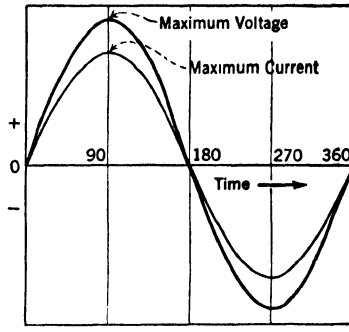

Fig. 102.—The current and voltage are always in phase in an a-c. circuit that contains only resistance.

Ohm.—The standard unit, an ohm, is that resistance which would be offered to the flow of a steady electric current by a column of mercury 106.3 cm. long (1 cm. is less than $\frac{1}{2}$ in.); 14.4521 grams (28 gr. = 1 oz.) weight, at a temperature of 32° F. or 0° C. and a uniform cross-section; it is usually expressed as the amount of resistance offered by a current of one ampere under a pressure, or e.m.f., of one volt.

Ampere.—The ampere is the standard unit of current flow. One ampere is the steady flow (or rate of flow) of electric current which will

deposit silver at the rate of .001118 grams per second when passed through a standard solution of silver nitrate. An ampere is a flow of current moving at the rate of one coulomb per second.

Inductance in General.—When a circuit, Fig. 103, embodies the use of an inductance (a coil of wire) and an alternating current flows through it, it is apparent that the inductance will offer opposition to the current flow in addition to the circuit resistance. This condition was referred to in one of the previous paragraphs. This opposition, due to inductance in the circuit, is called inductive reactance, and is measured in ohms and varies with the rate of change of flux in the circuit, or the frequency of the current.

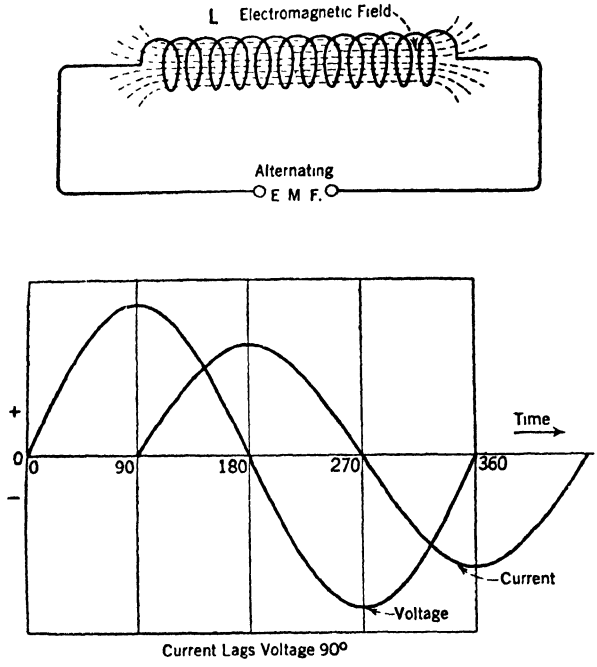

Fig. 103.—Showing current "lag" in an a-c. circuit containing only inductance.

Laws of Induction—Inductive Reactance. — Current flowing in a conductor always produces a magnetic field of definite proportions surrounding the conductor, thus producing a magnetized strain in the space in which the magnetic lines of force exist. This is analogous to the electric displacement produced in dielectric materials when an electric potential difference exists between two charged plates or surfaces. The magnetic strain in any given area is called the *magnetic flux*, and it is dependent upon the following factors:

(1) The magnetic field intensity.
(2) The magnetic permeability of the circuit through which the flux is maintained.
(3) The area.
(4) The magnetic flux is proportional to the current in the circuit.

First Law.—When the number of lines of force threading a closed circuit is changing, due to an alternating current flow (or a pulsating direct current flow) an e.m.f. or reactance voltage is induced in the circuit which is proportional to the rate of change of the number of lines of force.

Second Law.—The resultant or actual current flow is dependent upon the reactance which the flux will set up. This reactance in the form of voltage is induced within the circuit or in the windings which are part of the circuit. (For illustration see Fig. 100.) The field is shown building up when the current rises, and the magnetic lines of force thread through the turns of wire in an outward direction as designated by the solid arrow. During this period of increase the flux is inducing an e.m.f. within the coil, in the direction of the broken arrow. It is seen that the e.m.f. due to this reaction is counter, or opposite, to the e.m.f. on the line which is causing the current to flow. This voltage reaction is in such direction that the induction of the coil is actually trying to prevent the current rise in it. Suppose the current tends to increase in strength rapidly, as it would if an e.m.f. of high frequency was applied across the coil, and suppose the coil has a large inductance value. It would then produce a very strong flux for a given current and a very high counter e.m.f. would be developed. The induced e.m.f. acts against the line voltage when the current is rising in value, hence the resultant voltage or actual voltage in the circuit is the difference between them. Thus, a high reactance voltage will give a resultant voltage of low value with an accompanying decrease in current flow. A coil then of large inductance value tends to oppose the flow of a high-frequency current. On the other hand, a low frequency current flowing in the same coil would have a longer time in which to flow through the coil, and the reactance voltage developed for that low frequency current would be less. The counter e.m.f. being less, the resultant e.m.f. on the line becomes greater, and the current flow through the coil rises in value.

The use of inductance in a circuit and its effect upon that circuit depends principally upon the frequency of current handled; in other words, the time element is the important factor.

The above description relates only to the opposition, termed inductive reactance, which the inductance of the circuit offers to the current increasing in strength, and it will be shown that the same inductance will oppose a current *decrease*. Referring again to Fig. 100, the magnitude of the magnetic field surrounding the coil diminishes when the current begins to decrease, and the direction in which this reduction in the number of magnetic lines of force takes place is inward or toward

the coil as shown by the solid arrow. This change in direction of flux cutting back upon the coil reverses the direction of the induced e.m.f. In *this* case it will be observed that this new e.m.f. or induced e.m.f. is in the same direction as the applied e.m.f. on the line. Broken arrows indicate the direction of the line e.m.f. When the induced voltage assists the line voltage it tends to prevent the decrease of current; or, in other words, the induced voltage tends to perpetuate the current flowing through this circuit if the switch were opened.

In a summation of the above explanations it may be stated that the direction of the induced e.m.f. is always such that the current which it tends to produce acts to prevent any change in the magnitude of the field. That is to say, the e.m.f. produced due to the phenomenon of self-induction tends to prevent a magnetic field from being established around a coil, but once established it also tends to prevent its dissipation.

Self-Induction.—Self-induction is that property of an electrical circuit which will cause an e.m.f. to be induced therein by variations in the circuit flux which follow the changes in current intensities. This property is similar to inertia in mechanics. (See reference and analogy of the two automobiles.)

The amount of self-induction of a circuit depends upon its geometric form, and, in the case of a coil, also upon the permeability of the core material. Permeability is a measure of the ease with which a substance may be magnetized; air is a standard basic unit (1), and other materials are compared to it, the average for iron reaching about 2000. An iron core in an inductance (coil), therefore, increases the permeability of a circuit. The core itself becomes a magnet, setting up its own lines of force. The net *result* is the increase of the total flux of the circuit and consequently the self-induction.

The reactions that occur in a circuit when variations of current take place may be interpreted by the simple expressions:

X = reactance of the circuit; this opposition is measured in ohms.

X_L = inductive reactance; that reactance which only the inductance L offers, and measured in ohms.

$$X_L = 2\pi f L$$

where f = the frequency of the current or rate of change of flux;

L = the inductance of the circuit in henrys;

π = a factor which equals 3.1416.

An increase of either frequency or inductance will increase the inductive reactance, and a decrease of either frequency or inductance will decrease the inductive reactance.

Unit of Inductance—Henry.—Although detailed information on the use of inductance is given throughout different parts of this text, it may enlighten the reader to supply additional information on the subject and the approximate values of inductance as used in various radio and power circuits.

The *practical unit of inductance* is the *henry*. The inductance of a circuit is one henry when a current changing at the rate of one ampere per second will induce an e.m.f. of one volt in the circuit. The unit henry is expressed in smaller units: 1 millihenry equals .001 henry or one-thousandth part of a henry; 1 microhenry equals .000001 henry or one-millionth part of a henry. In centimeters: 1 henry equals 1,000,000,000 cm.; 1 millihenry equals 1,000,000 cm.; 1 microhenry equals 1,000 cm. Centimeter in this usage has no relation to linear measurements.

A coil which has a large value of inductance is called a choke coil or reactor because it offers a very high inductive reactance when placed in a circuit which carries a varying current. The current may be an alternating one, constantly changing its intensity and direction of flow, or the current may always flow in the same direction, increasing or diminishing in strength, similar to the pulses or ripples of a pulsating direct current. In either case the high reactance voltages developed by a coil of large inductance will tend to prevent such a current change, which is called its *choking effect*. In the case of the alternating current, the current will be choked out and will not flow through the inductance. In the case of the pulsating direct current, the ripples or variations of current strength will be somewhat smoothed out, and the direct current will flow at a steady value through the inductance. A choke coil of this kind, when used in a power circuit, will have a very heavy iron core and many turns of wire, with an inductance value in the vicinity of 30 or 50 henrys or more. Large choke coils of this kind are called *filter reactors*.

In general, coils not used as choke coils in oscillatory circuits or radio-frequency circuits have an inductance of the order of .0003 henry, or 300 microhenrys. A coil of this kind, with a low inductance value, will pass both high and low frequency currents because its reactance is low. However, a radio-frequency coil of this kind may pass a certain high frequency and yet be critical to frequencies of still a higher order. Radio-frequency coils have "air" cores and are wound in various forms in order to lower their distributed capacity. (See Fig. 96.) They range from a few turns to perhaps a hundred turns, more or less, depending upon the frequency of currents in the circuit in which the coil is used.

A radio-frequency choke coil designed to suppress or exclude a radio-frequency current usually has an inductance of approximately 1 millihenry. It would consist of about 200 to 300 turns of wire, forming a coil about $1\frac{1}{2}$ in. long by $\frac{3}{4}$ in. in diameter. The choke coil may have a little iron in its core for the radio-frequencies of the lower order, or higher wavelengths. Such coils containing some iron are usually placed in the voltage leads of a circuit to prevent radio-frequency losses through lines that are supplying power to operate the circuit.

It has been stated before that the current flowing through a certain inductance will lag behind the e.m.f. if the frequency of the e.m.f. is increased in the circuit, and all inductances are designed with this factor in view. If a coil is used to choke out a particular band of frequencies its inductive reactance must be such that the alternating currents will not have sufficient time to overcome the reactance of the coil before the alternations or reversals of e.m.f. take place. If the coil is to be used to pass one frequency efficiently, its inductive reactance must be such that maximum current will flow through the inductance at each alternation or reversal of e.m.f.

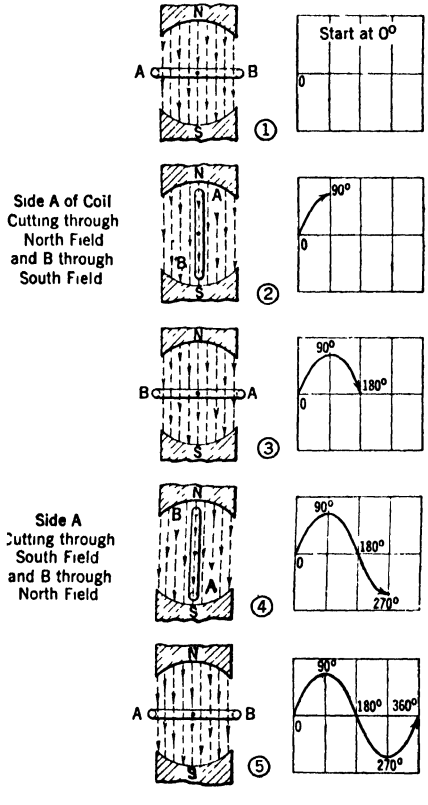

FIG. 104.—Showing the production of one cycle of alternating e.m.f.

Frequencies—Description of a Cycle of Alternating Current.—In Chapter V explaining the function of a generator it was shown that when a coil of wire is turned one complete revolution, describing a complete circle, the coil has moved through 360°. (See Fig. 104.) When the coil is rotated through a magnetic field, the magnetic lines of force (generally called the flux) which compose the field must be passed through or cut through by the coil. There are two forms of energy present, the magnetic field and the force required to turn the coil, and as a result of the work thus performed an electric pressure or e.m.f. is induced in the coil. The pressure induced is called

electromotive force, e.m.f., or voltage. If the coil is connected to an external circuit, which forms a closed conducting path, current will flow through the circuit under this applied force.

The magnetic lines of force in the field, which have a direction of force or pull from north to south, are represented by the broken parallel lines with arrows indicating the direction. When the coil or loop of wire AB in (1) is rotated in the magnetic field it can be seen that the coil is always moving at some angle to the lines of force at all degrees, with the exception of 180 and 360, for at these two points the motion of the coil is parallel, or in the same plane, with the direction of the flux.

When the coil is moving at right angles to the flux, as in the position assumed at 90°, and 270° in the rotation, the coil is cutting through the greatest number of lines of force, and the maximum induction then takes place. When the coil begins cutting the flux at less than a right angle, the induced e.m.f. is lowered until finally no induction takes place when the coil is again moving with, or parallel to, the field.

The magnitude of the induced e.m.f. depends upon the strength of the magnetic flux, the angle at which the coil cuts the field, and the speed of rotation. When 100,000,000 magnetic lines of force are cut by a conductor in one second the e.m.f. induced in the conductor is one volt. The direction of the induced e.m.f. may be determined easily by employing a rule known as the right-hand rule (explained in Chapter V).

The coil, during its rotation of 360°, cuts the field first in a downward and then in an upward direction. This change of direction causes the induced e.m.f. to reverse its direction, so that two alternations are generated, thereby completing the full cycle. The curve in Fig. 92 represents a complete cycle of alternating current, and depicts the gradual rise and fall and reversal of current. The curve shows the relation between time, in fractions of seconds, and the strength or amplitude (vertical lines) of the current at any given point during the complete revolution of the coil.

The horizontal lines drawn above (showing positive values) and below (showing negative values) the horizontal zero axis, 0 to 360°, correspond to the angular position of an armature coil at any instant while it is revolving. We have given only positions 45° apart (a greater number of amplitudes could be shown), and have erected the amplitudes to indicate by their respective heights the intensity of the current at the successive 45° positions. A line drawn through the points (shown by heavy dots) where the horizontal and vertical lines intersect takes the form of a wave and is called a sine wave.

The rotation of a coil one complete revolution through a magnetic field (shown in Fig. 104) is illustrated by the graph in Fig. 92. The

amplitude strength of the current is shown by the vertical lines a_1, a_2, and a_3, etc., taken at 45, 90, 135, etc., or at 45° intervals during the rotation of the armature. The figure on the left, from which the graph on the right was plotted, conveys exactly the same meaning in angular changes, but amplitude intensities at the different angles are more easily visualized in the graph on the right with the time interval clearly illustrated.

Figure 105 illustrates the principle of plotting a cycle of 360° on a horizontal line, from *A* to *B*, so that the current and voltage changes can be easily pictured, as in Fig. 92, as a continuous wave motion of energy, fluctuating during a given period of time.

In the case of an alternating voltage produced by a generator, the frequency is governed by the speed of rotation of a mechanically driven

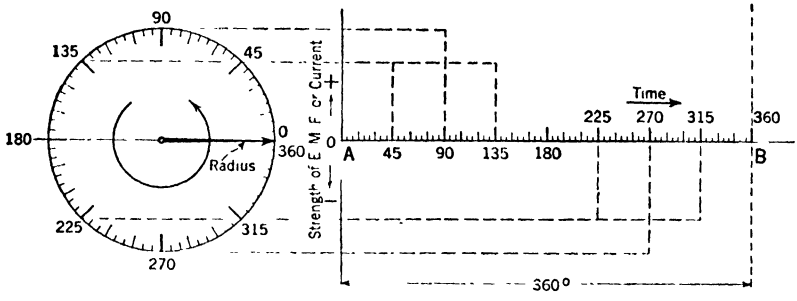

FIG. 105.—A graphical illustration of time and degrees plotted against energy changes. The graph and the circle represent a 360-deg. movement.

armature, and the number of magnetic field poles mounted in the generator.

Alternating Current Frequency.—Alternating currents of high frequencies in the vicinity of millions of cycles per second are produced by the combined action of a condenser and inductance. (Refer to the action of an oscillatory circuit.) The frequency or wave motion of the alternating current is plotted as shown in Fig. 94.

The frequencies of the alternating currents handled in radio receivers and transmitters are classified in about four divisions. There are the standard machine frequencies, ranging between 60 and 500 cycles, generated by alternators to supply power to operate spark transmitters, and 60-cycle-110 to 220-volt supply to operate vacuum tube transmitters. In broadcast telephony the currents are varied in sympathy with voice and music vibrations through the functioning of the microphone, and these frequencies range from about 20 to 7000 cycles or more. Above the voice or audio-frequency range comes the intermediate-fre-

quency range, in the order of about 180,000 cycles, or less. The intermediate frequencies are usually found in the circuits of the superheterodyne receiver. Intermediate-frequency currents are produced by heterodyning two r.f. oscillations of slightly different frequencies flowing simultaneously in the same circuit. Radio-frequencies include the intermediate range and all other frequencies extending upward to millions of cycles per second.

Oscillations at the higher frequencies may be produced in oscillatory circuits, composed of inductance and capacity, by the building up of a potential difference across a condenser dielectric from some source of e.m.f. and allowing the condenser to discharge through the coil. The oscillating currents flow through the circuit at very high frequencies, being limited only by the circuit impedance. The e.m.f. applied to the oscillatory circuit, which gives the condenser its initial discharge, finds its source, in one case, in the self-inductance of another circuit directly or conductively coupled to it, where the reactance voltage generated is due to some current change going on in the other circuit. The applied e.m.f. may also be induced in the oscillatory circuit through electromagnetic induction or electrostatic induction from another circuit indirectly or inductively coupled to it. The circuit which furnishes the power may be called the *driving circuit.* The circuit receiving the power is the *excited circuit.*

By using known values of inductance L and capacity C the frequency at which currents will oscillate may be predetermined, where the ohmic resistance is very small.

The fundamental formula for frequency is:

$$\text{Frequency} = \frac{1}{2\pi\sqrt{LC}}.$$

The foregoing is only a brief outline of the order of current frequencies encountered in radio. The purpose influencing the desire to study alternating currents is to be able to ascertain when the circuit constants are correct, that is, when the proper conditions exist. The size of an inductance, the capacity of a condenser, or the value of a resistance, must be suited to the particular frequency in order that an alternating current of maximum strength will flow in the circuit.

Alternating current circuits have various constructions, according to their requirements, which may be classified as follows:

(1) Circuits that are designed to pass maximum currents; they are resonant to one given frequency, or a band of frequencies.

(2) Circuits that create a lagging current, that is, impede currents of different frequencies.

The impedance of circuits is classified according to the frequency of the currents that are intended to be choked out or suppressed, whether radio, intermediate, audio, or low frequency.

OHM'S LAW FOR ALTERNATING CURRENT

All of the oppositions in an alternating current circuit are measured in ohms. The difference between the inductive reactance X_L and the capacity reactance X_C equals the reactance X of the circuit. The reactance X combined with the ohmic resistance R expresses the total of all oppositions, which is called impedance, Z. Therefore, in Ohm's Law formula for alternating current, the reactance effects are included by substituting Z for R, or:

$$I = \frac{E}{R} \quad \text{Ohm's Law for Direct Current}$$

and

$$I = \frac{E}{Z} \quad \text{Ohm's Law for Alternating Current}$$

The complete deduction of this important law is given as follows, substituting in the a-c. formula the values that are represented by the quantity, impedance:

(1) Impedance $Z = \sqrt{R^2 + X^2}$

Let Reactance $X = (X_L - X_C)$

(2) Then $Z = \sqrt{R^2 + (X_L - X_C)^2}$

Let inductive reactance $X_L = 2\pi fL$

Let capacity reactance $X_C = \dfrac{1}{2\pi fC}$

(3) Then $$Z = \sqrt{R^2 + \left[(2\pi fL) - \left(\frac{1}{2\pi fC}\right)\right]^2}$$

After having found what Z equals, we now substitute what it stands for in the first formula, $I = \dfrac{E}{Z}$ and the expression now becomes:

(4) $$I = \frac{E}{\sqrt{R^2 + \left[(2\pi fL) - \left(\frac{1}{2\pi fC}\right)\right]^2}}$$

This is the complete Ohm's Law formula for alternating current.

Sine Wave and Its Relation to $2\pi f$.—Many persons invariably inquire as to the derivation of some of the well-known constants that are used in radio formulas, particularly the constant $2\pi f$ for reactance. Therefore a brief discussion on this topic is given here. (Refer to Fig. 92.)

The circumference of a circle is measure in 360 deg. The linear measurement or distance around the circle is equal to the diameter multiplied by 3.1416. The symbol π (Pi) is used to designate the factor 3.1416.

Suppose we begin to move the radius *OR* in a counter-clockwise direction, beginning at the small zero point on the circumference of the circle. It could be said that the radius *OR* has passed through 360 deg., or one cycle, after returning to the same point from which it started.

If it required $\frac{1}{60}$ second to complete this revolution, and the motion is continued at the same rate of speed, the frequency at which we are moving the radius *OR* is 60 cycles.

A similar set of conditions can now be illustrated on the graph to the right of the circle by drawing the horizontal line or zero axis. The length of this line is equal to the distance around the circle, that is, equal to 360 deg. The degrees are pointed off along this line as shown. This line really represents *time* because for any movement or set of conditions that would occur while *OR* was rotated 360 deg., the same set of conditions or energy changes in the same given time will be plotted along and on either side of the zero line. Thence, as in the case cited above, if it requires $\frac{1}{60}$ second to complete a 360-deg. movement with *OR* it will also require $\frac{1}{60}$ second to complete a full set of values from *O* to 360 deg. The term *values* means the instantaneous values of either alternating e.m.f., or alternating current throughout one cycle.

The *time period* is the time necessary to complete one cycle, or 360 deg. The radius *OR* is called a revolving vector and moves at a uniform speed in a counter-clockwise direction.

Following our previous explanations it is seen that one revolution is a complete cycle, and the angle turned through is 360 deg.; that is, the vector passes through the angle 2π radians.

The horizontal line represents one complete cycle of values. In our illustration we have divided the circle into parts at 45-deg. intervals; therefore, the zero line is divided into a similar number of parts and each part represents a movement of 45 deg.

It should be clear that to describe the circle of 360 deg., or to move from *O* to 360 deg. on the horizontal axis, the same time as previously mentioned will be required.

The horizontal lines called the *abscissas* are projected from the circumference of the circle at the different degrees. The vertical lines, or *ordinates*, are erected at 45-deg. intervals along the horizontal axis corresponding to the equal number of degrees on the circle.

Where a horizontal and a vertical line intersect, indicating the same degree of movement (that is, where a 45-deg. ordinate on the graph intersects the 45-deg. abscissa drawn from the circle), a point is located, designated as $A1$. All the points are located on the graph in this way and a line drawn through all the points will be a sine curve.

We know that the time period changes with changes in frequency. *Frequency is the number of times per second that the electromotive force passes through the complete cycle of values*, or in this case, the rate at which we describe the circle or move along the zero axis from O to 360 deg. and continue this movement for one second.

The angular velocity of the loop of wire, illustrated in Fig. 104, turned one complete revolution through a magnetic field, will produce the cycle of e.m.f. that we are describing, and the magnitude of the e.m.f. generated in the loop depends for one thing upon its rate of motion.

When the speed of a generator armature is increased the e.m.f. is increased, and the frequency is raised. Then it follows that the angular velocity equals 2π divided by the time period. The time period, T, of the alternation is the reciprocal of the frequency, f, because any increase in frequency will lower the time period, and vice versa.

It now follows that the angular velocity is equal to 2π multiplied by the frequency or $2\pi f$.

The relation which frequency bears to the angular velocity is derived from the fundamental production of one cycle of e.m.f. when an armature coil is rotated one revolution through a magnetic field.

When we write the formula for inductive reactance or $2\pi fL$, the factors of time and angular changes, which an alternating e.m.f. or current undergoes when completing a cycle, are already included in the constant $2\pi f$.

From this it should be clear that reactance depends upon both *rate* and *intensity* at which the energies change, and of course it also depends upon the inductance of the circuit. This is also true of the factor $2\pi f$ in the formula for capacity reactance:

$$X_C = \frac{1}{2\pi fC}$$

where

X_C = capacity reactance.

Each time the radius OR changes its position a different angle is formed between it and the zero axis. For instance, if OR is moved from the point of zero deg. on the circle to 45 deg., the angle formed at X is 45 deg., or if OR is moved to 80 degrees an 80-deg. angle is formed, indicated at Y. Therefore, while the vector OR describes a complete circle, it will undergo a series of different angular changes with reference to the zero axis. Furthermore, the vertical lines or amplitudes drawn from the points of location on the circle to the zero axis will vary in height as the vector OR is rotated.

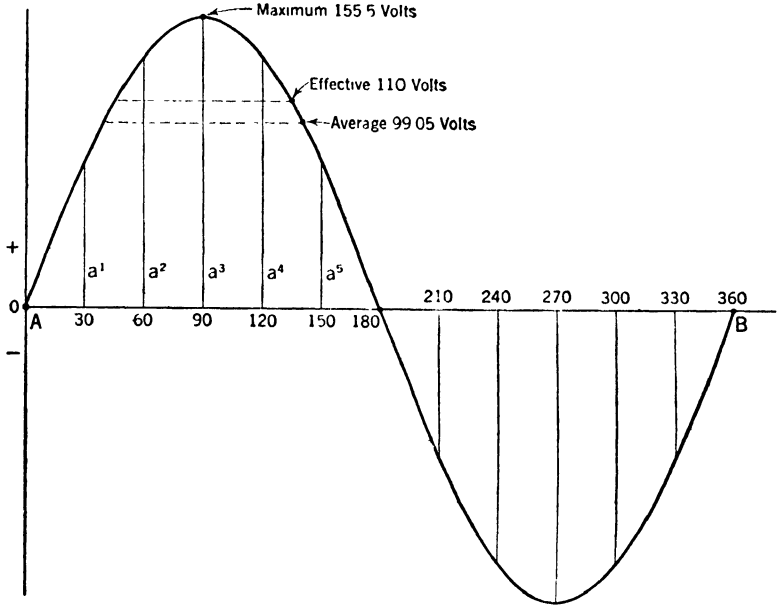

FIG. 106.—A sine curve showing that alternating current has maximum, effective and average values.

Maximum—Average—Effective Value of Alternating Electromotive Force and Current.—An alternating e.m.f. and current are continually changing respectively in pressure and intensity from zero to maximum or ultimate values, which means that there are an infinite number of different values, called instantaneous values, all occurring in successive order. It is a continuous process of increase and decrease.

In Fig. 106 the maximum value reached, at 90 deg., is shown as the height of the vertical line a_3, indicating that the e.m.f. is 155.5 volts at that particular instant. Each vertical line, a_1, a_2, a_3, etc., shows by its respective height the instantaneous value taken at particular times

during the cycle. A greater number of instantaneous values may be taken, although in our graph we illustrate only 12 of these values.

The whole cycle of voltage changes through 360 deg., which also represents the time required to complete the cycle, is shown by the horizontal axis, from *A* to *B*. If we erect 12 vertical lines equidistant from one another, then from *A* to *B* these lines will be 30 deg. apart. Since the vertical lines are called *amplitudes*, we may say that at every 30 deg. an amplitude is erected showing the value of the e.m.f. at that instant during the cycle.

Since we assume the maximum value to be 155.5 volts, then if we take the sum of the twelve readings and divide this total by twelve, the result will give the *average value*, which in the case of a sine wave is found to be 99.05 volts. The average value is 0.636 times the maximum value.

We do not use either the *maximum* or *average values* of either e.m.f. or current in our ordinary practical work, hence there is a value of greater importance, that which expresses the effectiveness of a given electromotive force or current in a circuit. The *effective value* indicates the actual available amount of energy applied to the circuit.

An a-c. voltmeter connected in the circuit will read the *effective voltage*, and an alternating current ammeter will read the *effective current*. To arrive at the effective value of an alternating current a common basis of comparison is used in the heating effects produced by an alternating current and a direct current. The heating effects of direct current are uniform in a given circuit, and the equivalent power or average heating effects produced by an alternating current are compared under exactly similar conditions, and expressed in terms of a given number of amperes of direct current. The unit *ampere* of alternating current has no definition of its own, except in that it is compared to the standard unit ampere of direct current, which is defined as a certain given current flow necessary to deposit a given quantity of silver by a process called electrolysis which has already been defined.

In a direct current circuit the heating effect is equal to $I^2 \times R$, and is seen to vary as the square of the current. I^2 is derived from Watts $= I \times E$. Since $E = IR$, then by substituting E in the foregoing Watts formula, we have Watts $= I^2R$. For example: If 10 amperes of direct current passes through a circuit having a resistance of 5 ohms, the power of the current converted into heat will be $I^2 \times R = 10^2 \times 5 = 500$ watts. The heating effect of a current is proportional to the square of the current; that is, a current of 2 amperes produces four times as much heat as a current of 1 ampere, and a current of 6

amperes produces 36 times as much heat as a current of 1 ampere, and so on.

If no change is made in the resistance or other conditions of a circuit except to double the current flow by increasing the e.m.f., then the heat produced by this increase in current will be four times as great. This explains the practical meaning of I^2R, or *current square law*, relating to energy increases.

If an alternating current is passed through the same circuit, to produce heat equivalent to that produced in the direct current circuit by 10 amperes, the power of the alternating current now converted into heat will also be 500 watts and to do this a flow of 10 amperes of alternating current will be required.

The heating effect of a current is independent of the direction of the current flow. Therefore the heating depends upon the average of the squares of each of the instantaneous values of the current.

To obtain the heating effect of the alternating current shown by the curve in Fig. 107, several of the instantaneous values, a_1, a_2, a_3, etc., are squared and plotted as indicated by the dotted vertical lines. The heavy dotted line so drawn as to connect the ends of the vertical lines forms a curve which is called the heat curve. The average (mean) value of these squares is now computed, and it is represented by the height of the line CD above AB and is marked F. When the square root of this average is extracted the effective value of the alternating current is obtained.

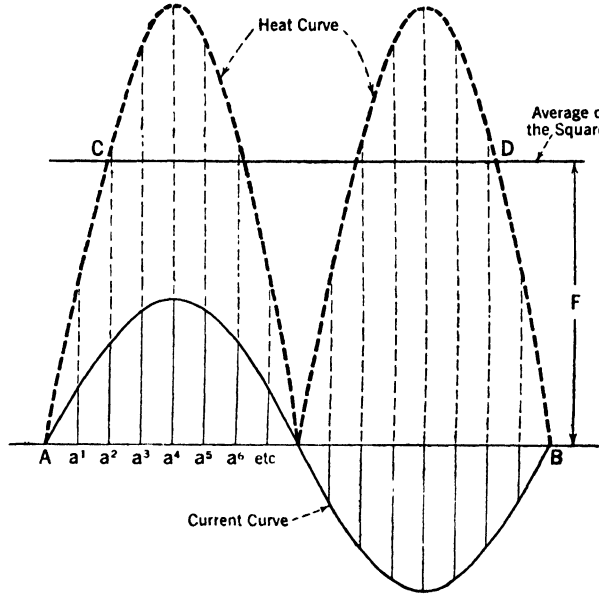

FIG. 107.—A graphical representation of the heating effect of alternating current.

The alternating current curve and voltage curve of Fig. 108 are

sinusoidal, and called a sine wave. It is found that a sine curve bears a definite relationship to its maximum value per alternation, and from this phase practical mathematical deductions may be made. The effective value is equal to 0.707 of the maximum value of the wave. Although the waves in radio-frequency circuits and the sine curve for an a-c. power circuit may not be pure sine waves, or sinusoidal, yet they may be assumed to be for all practical measurements.

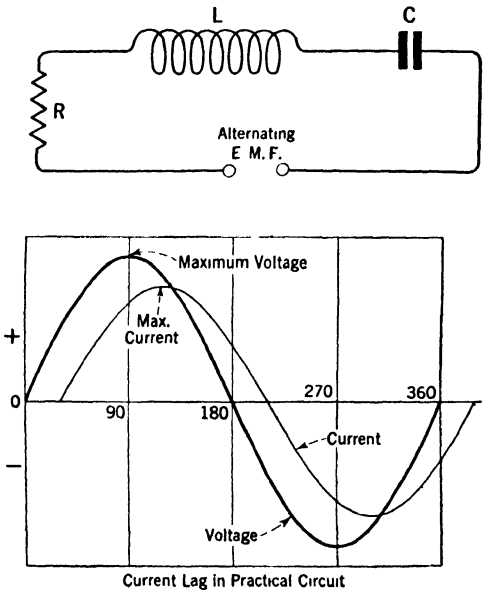

FIG. 108.—An a-c. circuit consisting of inductance, capacitance and resistance.

If in the sine curve illustrated in Fig. 106 the maximum value of e.m.f. is 155.5 volts, the effective value would be equal to 0.707 × 155.5, or 110 volts, and an a-c. voltmeter connected across the line would read 110 volts.

The fact that the maximum voltage reaches a peak, which is so much higher than the *actual voltage*, explains why the insulation in alternating current work is subjected to a greater strain at times than in the case of direct current.

It should be borne in mind and impressed upon the reader that the alternating voltage is furnishing the actual pressure necessary to force current through the circuit. The term voltage will be found expressed in the following different ways, all of which have the same meaning: *impressed or applied voltage, impressed or applied e.m.f., line voltage, line e.m.f.*

The effective alternating voltage bears the same relation to the maximum voltage that the effective current does to the maximum current. Supposing that the maximum value of current per alternation in Fig. 109 is 14.1 amperes, the current rises and falls uniformly between + 14.1 and − 14.1 amperes. Then 14.1 amperes multiplied by 0.707 equals 10 amperes, indicating the same heating effect as produced by a direct current of 10 amperes. An a-c. ammeter connected in the circuit would indicate 10 amperes, because the instrument is designed to read the effective values.

Root Mean Square—(R.M.S.).—The effective value of an alternating current or an alternating voltage is sometimes spoken of as the *square root* of the mean (average) squares, which is abbreviated R.M.S. The R.M.S. (Root Mean Square) is the effective value as indicated on an a-c. voltmeter. The expression has practical usefulness in understanding the characteristic tables for certain types of rectifier hot cathode type tubes, where the operating a-c. voltages, as specified in the table of characteristics, are followed by the letters R.M.S.

Watt Power.—The *watt power* expended is the *effective voltage* multiplied by the *effective current*, when there is no self-inductance in the

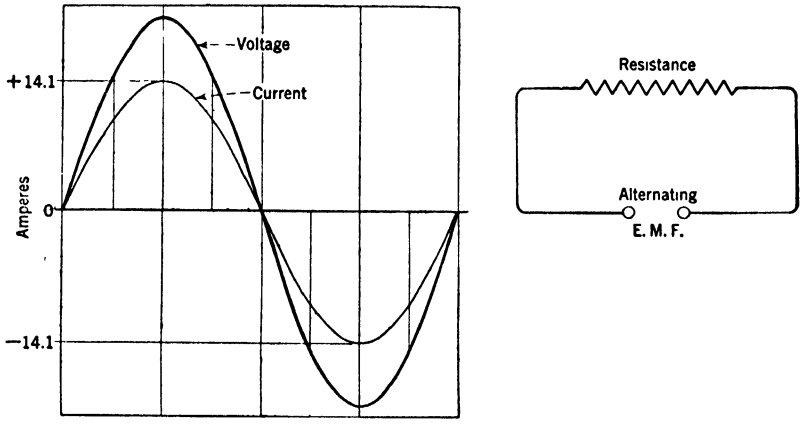

FIG. 109.—Showing that if an a-c. circuit contained only resistance the voltage and current would be in phase.

circuit, and resistance is the only form of opposition present. (Note the relation in Fig. 109.)

A circuit using only incandescent lamps is an example of a circuit with practically no self-inductance, for only the resistance of the filaments and the conducting wires limits the current flow.

The power in this circuit is substantially equal to the product of the current and voltage readings as indicated on the a-c. ammeter and voltmeter respectively, because the current and voltage will be very nearly in phase.

Phase relations are fully discussed elsewhere. Figure 109 illustrates an e.m.f. curve and also a current curve *in phase*. The current and voltage are both at zero at the same instants and also at maximum values at the same instants; they keep in step throughout the cycle and this condition, as already explained, can exist only in an alternating current

circuit having resistance but no reactance as the opposing force. Expressed as a formula then:

$$P = E \times I$$

where

P = power in watts;
I = effective current in amperes;
E = effective e.m.f. in volts.

In this case P = the true power (without reactance), the same as in a direct current circuit.

However, all alternating current circuits in radio have some form of reactance, either inductive or capacity reactance, and the effective power cannot be found by taking the product of the voltage and the amperage. In order to take into account the reactance factor in a practical way, some commercial transmitters are equipped with wattmeters. The wattmeter is constructed to compensate for the power factor, and hence the true power may be read directly from the scale.

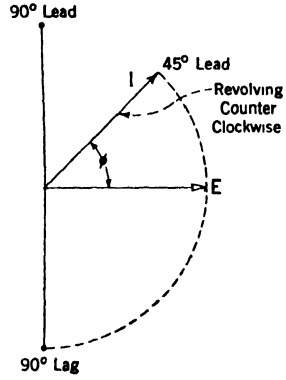

FIG. 110.—Illustrating the "lag" and "lead" of current (I).

Impedance—Analogy and Use of Vector Diagram—Power Factor.—Problems.—A vector is a line representing current or voltage whose length indicates its value or intensity, and whose direction with reference to another vector determines the phase relations between the values represented. (See Fig. 110.) The lines are drawn to scale, that is, one inch may equal five amperes, but we must have different scales for current and voltage. The *reference vector* is different in one way from the regular vector in that it has a closed arrowhead. Reference vector is the one to which other vectors in the diagram would be referred in determining phase relations. The vector revolves counter-clockwise.

E = reference vector representing voltage;
I = shown as a leading current of 45 deg.;
ϕ = phase angle formed by the phase difference between I and E.

When the voltage and current are out of phase by a given number of degrees, for example, 45 deg., the cosine of the angle, formed ϕ, is the *power factor*. See Fig. 110.

This relation may be also understood by reference to Fig. 111, where a boat is shown moving up a stream. The opposition which the

water offers to the progress of the boat is called the resistance, and it is evident that this form of opposition is always present, even in calm and placid weather. Now let us assume that a wind is blowing across the path of the boat at 90 deg., or at right angles to its direction upstream. The course of the boat upstream is now changed and the direction it takes is a resultant of both oppositions presented. Since the oppositions of the water and wind occur at different angles and are also of different strength, the *resultant* is shown as the line drawn, which is called the *hypotenuse*, and it will indicate the drift of the boat. If there was no wind resistance and only water resistance there would be no drift to the boat as it moves upstream. When the boat drifts off its course, as shown by the hypotenuse, due to any reaction, such as the wind, the angle marked 45 deg. on the drawing, indicates the amount of this deviation. The movement of the boat may be said to *lag* behind the power applied to move the boat by *the size of the angle formed at* 45 deg. Resultant changes of energy can therefore be conveniently expressed in terms of angles and their mathematical equivalents.

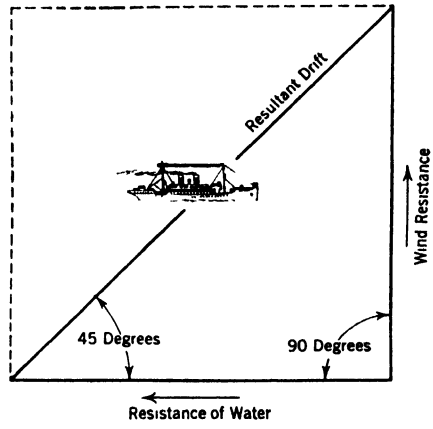

FIG. 111.—A diagram illustrating opposing forces which may be used to compare the oppositions encountered in an a-c. circuit.

Any angle formed is the result of a loss in movement or energy not fully applied and this we call a *power factor*. It is obvious that the smaller the angle at ϕ, or 45 deg. in this case, the more nearly the boat moves in a direct course, and if the boat were moving straight upstream no angle would be formed; that is, there would be no angle of lag.

The science of angles is covered in that branch of mathematics called trigonometry. If we consult a table of trigonometric functions and know the angle of the lag, the power factor for that angle, called the *cosine of the angle*, will be listed in an adjoining column. We find that if the angle is small the power factor will be high. The power factor cannot be greater than 1, and it is only 1 when there is no angle of lag; thus if an a-c. circuit had no reactance, the current and voltage would then be in phase.

We will review the foregoing discussion with the practical circuit and its vector diagram, as shown in Fig. 112.

The difference between the capacity reactance, 4 ohms, and the

inductive reactance, 10 ohms, is equal to the circuit reactance, or 6 ohms. The resistance is also 6 ohms. Construct parallelogram as illustrated, and since the sides are equal, 6 ohms each, the hypotenuse drawn as the heavy full line *OG* will form an angle at ϕ of 45 deg. The cosine of this angle is now looked up in the table of trigonometric functions and 45 deg. will be found to indicate a power factor of 0.707. A circuit then in which resistance and reactance are equal will have a power factor of 0.707.

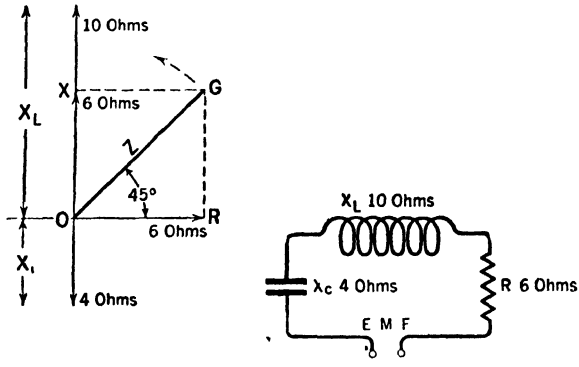

FIG. 112.—The vector diagram depicts the constants of the circuit shown.

Again, compare the circuit cited above to the boat movement in Fig. 111, and it is very clear that if the wind resistance just equals the opposition offered by the water, and the two oppositions are at right angles, or 90 deg. to each other, the boat will drift in a diagonal course of 45 deg. This angle indicates the difference between the *apparent power* expended which would keep the boat upon a straight course, and the *actual or true power* which is expended, because of the opposition due to the consideration of the wind resistance.

Resonance.—If the inductive reactance X_L and capacity reactance X_C of an a-c. circuit can be exactly balanced to equal zero, the a-c. circuit will have the characteristics of a direct current circuit. Whenever any electrical circuit operates without reactance effects, the power factor under such conditions will equal 1, because only the ohmic resistance opposes the current flow. With zero reactance, or when the power factor is equal to 1, a circuit is in a condition of resonance, the voltage and current are both in phase; they reach their maximum and minimum values at the same instant.

Resonance is an ideal condition to be obtained in an alternating current circuit for the maximum true power or actual watt power is equal to the product of the voltage and the current. In this case the watt power is measured like that in a direct current circuit.

Resonance and its direct dependence upon reactance have been explained in several paragraphs elsewhere in this book in the expectation that some of the analogies may make clear the practical application of

alternating current. This subject of reactance and impedance is of major importance because it covers control and regulation, and the function of every piece of apparatus used in an alternating current circuit may be explained by its laws.

The simple problems given here are illustrated and solved to assist the reader in the general use of the vector method of treating these conditions which graphically show the occurrences in the circuit, and it may prove valuable as a step toward a more advanced study of radio theory and alternating currents.

Parallel Problem.—The problem in this parallel arrangement is to find the current flow and also the watt power. Refer to the problem

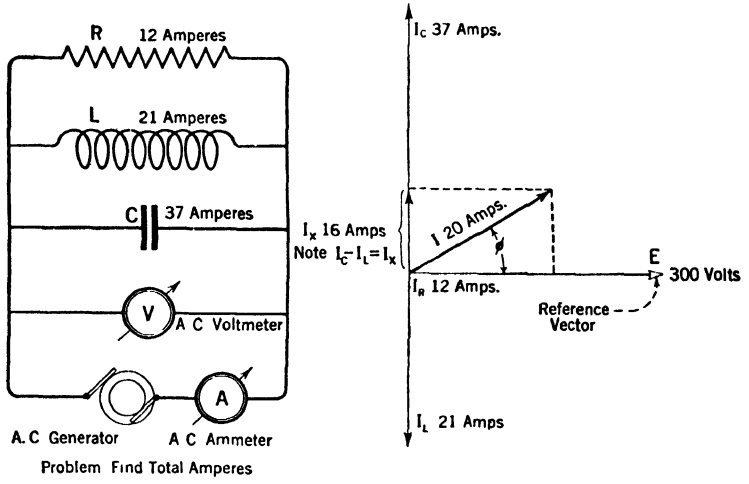

FIG. 113.—Illustrating the effects of reactances and resistance in an a-c. circuit.

diagram, Fig. 113, of the circuit and the presentation of this circuit by the vector diagram on the right in the figure.

I_R = current through R = 12 amperes,
I_L = current through L = 21 amperes,
I_C = current through C = 37 amperes.

The voltage across R, L and C is similar and let us say equal to 300 volts; and since all of these elements are in parallel connection we will use E voltage as the *reference vector* and construct the parallelogram as shown in the figure.

I_R is in phase with E voltage, because there is only resistance in this branch of the circuit.

I_C leads E by 90 deg. because there is only capacity in this branch of the circuit.

I_L lags E by 90 deg. because there is only inductance in this branch of the circuit.

$$I_C - I_L = I_X \quad \text{or } 37 - 21 = 16 \quad \text{whence } I_X = 16.$$

All of the above phase relations are shown by the vector diagram.

Draw hypotenuse I. By the Pythagorean theory the square of the hypotenuse equals the sum of the squares of the other two sides.

Then

$$I^2 = I_R^2 + I_X^2$$

or

$$I = \sqrt{I_R^2 + I_X^2} \quad \text{Substitute } R \text{ and } X \text{ values.}$$

Then

$$I = \sqrt{12^2 + 16^2}$$

$$I = \sqrt{400} = 20.$$

Whence

$I = 20$ amperes, the current flow in the circuit.

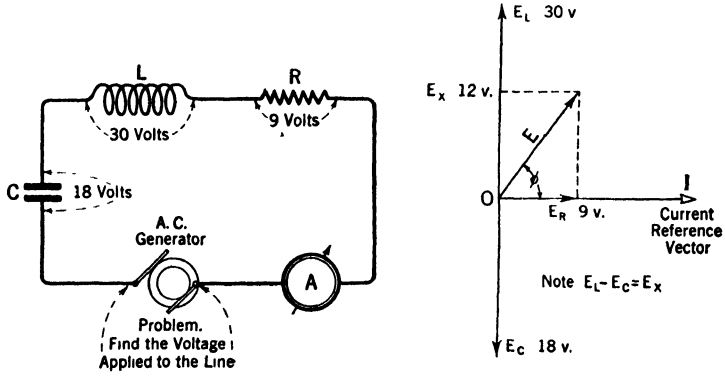

FIG. 114.—A problem in a series a-c. circuit in which the line voltage is to be found.

Power Factor (P.F.) $= \dfrac{I_R}{I}$ = ratio of current flowing through the *resistance* branch to that current flowing, where the *impedance* of the entire circuit is considered.

Substituting current values, P.F. $= \frac{12}{20} = 0.6$.

If true power in watts $= I \times E \times$ P.F. in alternating current,
then true power in watts $= 20 \times 300 \times 0.6$
or true power in watts $= 3600$ watts.

Series Problem.—The problem given in the series circuit illustrated in Fig. 114, with the circuit and its vector diagram, is to find the resultant voltage impressed across a circuit, and also the watt power in the

circuit, when the current flow and the individual voltage readings across the inductance, condenser and resistance are known.

One may easily solve the problem by remembering the following current and voltage relations:

E_R = A circuit which consists only of resistance. In such a circuit the voltage is always in phase with the current.

E_L = A circuit which consists only of inductance. In a circuit of this kind the current lags the voltage by 90 deg.

E_C = A circuit which consists only of capacity. Here, the current leads the voltage by 90 deg.

1. Let voltage across resistance E_R = 9 volts.
2. Let voltage across inductance E_L = 30 volts.
3. Let voltage across condenser E_C = 18 volts.

These facts are illustrated by the diagram, where the current is the *reference vector*, the voltage being compared in each case with the current. The horizontal line (current axis) OI is the reference vector.

(1) In the case when resistance E_R is in phase with the current, E_R is plotted along the same direction and coincides with OI, being drawn as OE_R. The vertical line is drawn at 90 deg. to OI in order to illustrate the reactance values on this line either above or below zero.

(2) In the case of the inductance path a line drawn above O will show a current lag of 90 deg., or E_L.

(3) In the case of the capacity of the circuit the line drawn below O will show a current lead of 90 deg., or E_C.

The difference between E_L, 30, and E_C, 18, is the resultant effect of the inductance and the capacity reactances, shown at E_X as 12 volts. Now this resultant reactance voltage, E_X, and the voltage across E_R are combined to find the total effect. The parallelogram is constructed by drawing dotted lines as shown, and the heavy line drawn as the hypotenuse or diagonal, designated as E, will equal the voltage for the whole circuit.

In the parallelogram the square of E equals the sum of the square of E_R and E_X or:

$$E^2 = E_R^2 + E_X^2$$

then

$$E^2 = 9^2 + 12^2$$

or

$$E = \sqrt{81 + 144} = \sqrt{225}$$

whence

E = 15 volts, total e.m.f. impressed on the circuit.

In reality this procedure carries out the suggestions offered in the boat analogy where its diagram represents the actual movement of the boat as governed by the prevailing opposing forces. In ascertaining how much of the applied voltage is actually available after the oppositions of resistance and reactance have been considered, the cosine of the angle ϕ formed by E and E_R is the power factor, as is also the voltage across the resistance divided by the voltage across the line.

The ratio of $\frac{E_R}{E} = \frac{9}{15} = 0.6$, the power factor.

In alternating current: Watts power = $E \times I \times$ power factor, then by substitution of known values as found above:

$$\text{Watts power} = 15 \times 5 \times 0.6$$

whence

$$\text{Watts power} = 45 \text{ watts.}$$

All of the voltage readings given in this problem are effective readings, such as would be indicated on an a-c. voltmeter if connected across the different apparatus and portions of the circuit where the values are given. The result bears out what is otherwise known about the peculiar distribution of voltage through a series a-c. circuit.

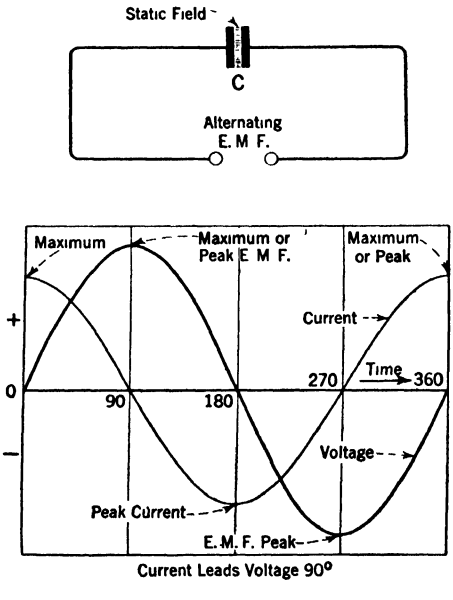

FIG. 115.—Showing how the current would lead the voltage by 90 deg. if only capacity were present in an a-c. circuit.

The three problems which are given herewith, with figure diagrams illustrating each one, may serve to acquaint the reader further with the use of formulas that are frequently employed:

I. To find the inductive reactance refer to Fig. 103.

$$X_L = 2\pi fL$$

If frequency f = 50 cycles
Inductance L = 0.02 henry
π = 3.1416

$$X_L = 2\pi \times 50 \times .02$$

$$X_L = 6.2832 \times 1$$

whence X_L = 6.2832 ohms, inductive reactance.

II. To find the capacity reactance refer to Fig. 115.

$$X_C = \frac{1}{2\pi fC}$$

If frequency $f = 50$ cycles
Capacity $C = .00005$ farad
$\pi = 3.1416$

$$X_C = \frac{1}{2\pi \times 50 \times .00005}$$

$$X_C = \frac{1}{.015708}$$

whence $X_C = 63.0$ ohms

III. To find the impedance Z refer to Fig. 108.

$$Z = \sqrt{R^2 + (X_L - X_C)^2}$$

Let resistance $R = 6$ ohms
Capacity reactance $X_C = 14$ ohms
Inductive reactance $X_L = 22$ ohms

$$Z = \sqrt{6^2 + (22 - 14)^2}$$

$$Z = \sqrt{36 + 64} \text{ or } \sqrt{100}$$

whence $Z = 10$ ohms, the total opposition including the resistance and all reactance.

Parallel and Series Resonance.—The circuit described in the problem under Fig. 113 is one where the quantities L, C and R are connected in parallel, and it was proven in solving the problem that the total current is less than the separate currents. This is a phenomenon due to the effect of impedance, which in a parallel circuit is very large, but in a series circuit is small.

In a circuit, as in Fig. 114, in which inductance L and capacity C are combined in series, the individual voltages across the coil and condenser exceed the resultant voltage across both, which was proven in the problem.

In the circuit illustrated in Fig. 113, the inductance, capacity and resistance are all connected in parallel, and the same e.m.f. is impressed across each one, as in the case of resistances connected in parallel.

1. A circuit in which only a condenser is used would be called a circuit of *all capacity* and the current would lead the voltage by 90 deg. In the circuit illustrated in Fig. 115 the sine curves of e.m.f. and current shows a leading current.

2. In a circuit including only inductance, the current lags behind

the voltage 90 deg., as illustrated by the diagram in Fig. 103, and the reference graph.

3. In a circuit where resistance is the only form of opposition there are no lagging or leading effects and the current and voltage are in phase, as illustrated by the diagram in Fig. 102, and the reference graph.

For all practical purposes there are no circuits encountered which employ only the use of a condenser—there is always found some form of inductance present. Therefore, the difference in the magnitude which either presents, that is, whether there is a predominance of either capacity or inductance, must all be considered, with the usual results that in the practical circuits there will be some *phase displacement* and the circuit will have a power factor which is less than 1.0. The illustration of an alternating current circuit, Fig. 108, with the graph, shows the possible conditions that may exist in a practical circuit. The graph shows the current lagging a few degrees behind the voltage

Reactance and Relation to Watt Power.—In a direct current circuit the effect of the counter e.m.f. of self-inductance is only momentary, either while the current is rising through its transient state until it reaches its steady status, or normal value, or while the current is decreasing from its normal value back to a zero value. The current in a direct current circuit undergoes a change in strength only when the current is turned on or off, that is, when the circuit is opened or closed.

The curve in Fig. 98 illustrates the growth or gradual rise of the current from A to B when the circuit in Fig. 100 is closed, the normal or steady current flowing from B to C in Fig. 98 during the interval the circuit remains closed, and the gradual decay or decrease back to zero from C to D when the circuit is opened.

In an alternating current circuit the effects of the induced voltages due to self-inductance are continuous because the currents are continually undergoing a change in strength and also reversing in direction. The use of coils or windings adds to the inductance of the circuit.

Given a circuit that includes inductance, it is found that the voltage impressed upon the circuit does not reach its maximum value the same instant with the current. The current lags behind the voltage. The difference in phase is called phase displacement. It is necessary in the practical radio field to resort to the use of a wattmeter to obtain the true power, although it may be found if we know the resistance R and impedance Z of the circuit.

The ratio of $\frac{R}{Z}$ is equal to the power factor.

Without the use of a wattmeter we can determine the true power in watts, provided we know the current in amperes as indicated on the

ammeter, the e.m.f. as shown on the voltmeter, the resistance of the circuit in ohms, and also the impedance of the circuit in ohms. The formula will read as follows:

$$P = E \times I \times \frac{R}{Z}.$$

The nature of self-inductance is fully explained elsewhere in this volume

In a circuit where opposing pressures are induced, this form of opposition is known as reactance.

It is obvious that in a circuit where reactance voltages are set up, they must affect the impressed or effective voltages which we have been discussing, and the true power of this circuit is called the apparent power, for it cannot now be the product of the impressed voltage and the current.

The product readings on the voltmeter and ammeter will give the actual power consumption in watts in a d-c. circuit where no reactance effects exist. On the other hand, in an alternating current circuit where reactance voltages are developed, the product of the volts times amperes gives only the apparent wattage.

It is clear that we must find some sort of a value which will give the difference between the apparent watt power and the true watt power. This value will then really indicate the extent or magnitude with which reactance voltages are affecting the applied e.m.f. *driving* the circuit. This value is called a *power factor.*

The true power then is expressed as follows:

$$P = E \times I \times \text{Power Factor (P.F.)}$$

The power factor is the ratio of the true watts to the apparent watts. For example:

The power panel of a radio transmitter may include the following instruments: an a-c. voltmeter, a-c. ammeter, and wattmeter. These instruments are usually connected in the primary circuit of the high-power transformer to indicate the input power to the transformer. Let us assume that the voltmeter reads 110 volts, which is the effective voltage, and the ammeter indicates an effective current flow of 10 amperes. The product of the volts times amperes equals the *apparent watts*, or $E \times I$ = apparent watts, or $110 \times 10 = 1100$ watts, apparent power. The wattmeter may read, let us say, 600 watts, for it is indicating the true or actual power, because the movement in the instrument is designed to read correctly the power consumption independent of the phase displacement.

The ratio of the *true watts* to the *apparent watts* is the power factor and for the particular conditions cited above the power factor equals

$$\frac{600}{1100} = 60 \text{ per cent.}$$

Further practical discussions follow on power factor and measurements.

Impedance Illustrated with a Diagram.—The three opposing forces, resistance, inductive reactance, and capacity reactance, are impeding in different ways, and also at different times. The direction of a force may be indicated by an arrow and the difference in time in which the forces act may be taken as a difference in degrees of a circle. An arc and an angle are thus constructed when there is any difference in time in which two forces are acting (Fig. 110) and, in this way, respective relations and magnitude of the forces opposing alternating current may be illustrated. The graphic illustration is called a *vector diagram*, and it is the only way in which the phase relations are easily read. It is simple to understand when one becomes familiar with its use. Refer to the boat analogy.

For example: Since the resultant reactance of a circuit is the difference between the inductive reactance and the capacity reactance it may be illustrated as in Fig. 112.

Let $X_L = 10$ ohms and $X_C = 4$ ohms.

The resultant reactance of 6 ohms is plotted on the perpendicular line, and is shown as the line OX.

The resistance R is plotted on horizontal axis OR, which is at right angles or 90 deg. to the reactance vector.

Now construct a parallelogram, as shown by the dotted lines, and draw the hypotenuse OG. By the Pythagorean theorem, the square of the long side Z, or hypotenuse, is equal to the sum of the squares of the two other sides X and R. The hypotenuse, Z, is the resultant or total of all oppositions, namely, reactance X and resistance R, which, as previously stated are termed impedance.

Capacity and Resistance in Series—How to Visualize the Effect of Capacitance in an A.C. Circuit.—The following experiment will give the reader a means for visualizing the effect of capacity when inserted in an alternating current circuit:

The effect of capacitance in an alternating current circuit is to produce a capacity reactance in the circuit which opposes current flow in the same way that resistance opposes current flow and the reactance will vary for either a change in the frequency of the current or for any

change in the capacitance of a condenser. Both capacity reactance and resistance are measured by the same unit of opposition, the ohm.

Let us connect a 110-volt, 100-watt lamp, and an a-c. ammeter in a series arrangement as illustrated in Fig. 116. Now connect this circuit to the lighting socket. Clips should be attached to the wires running to the condenser lugs shown as *A* and *B*, so that the condenser may be easily removed from the circuit and the wires clipped together to remove all capacity from the circuit. This provides a convenient means for substituting other condensers having different capacitance values.

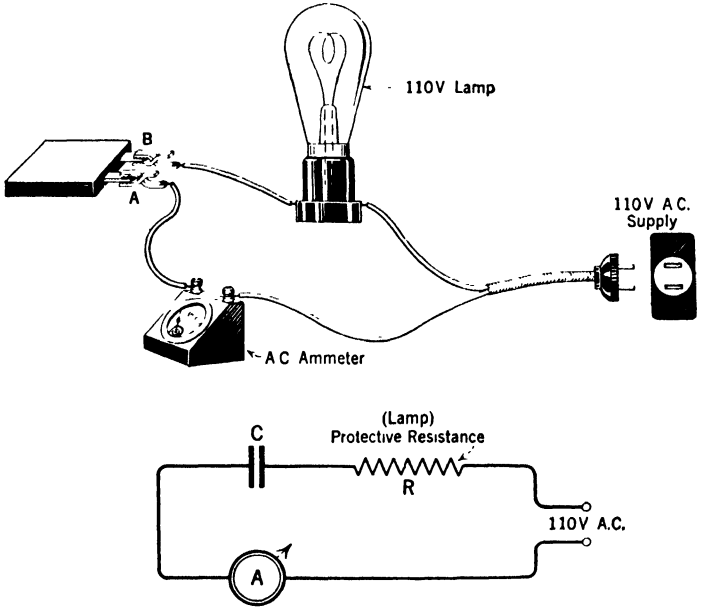

FIG. 116.—An experimental circuit to show the retarding effect upon current flow when capacity (condenser) is connected in a low-frequency alternating current circuit.

Now, with the first condenser connected in the circuit as shown in the illustration, the experiment is started. The filament wire is the only resistance in the circuit, if the resistance of the connecting leads is considered negligible.

Now insert the plug in the receptacle, thereby supplying power to the experimental circuit. Let us assume that the filament in the lamp will not light. Next, turn the power off and touch both terminal lugs of the condenser with the metal shank of a screwdriver in order to remove any charge which remains in the condenser. *Caution.*—Hold the screwdriver only by the wooden handle, and as far from the metal shank as

possible. This precaution will protect one from receiving a shock from a charged condenser. Remove this condenser from the circuit and connect the clips together, allowing current to flow through the filament wire, and the lamp will be seen to glow brilliantly without any capacity in the circuit.

From this experiment it is evident that although an alternating current was applied to the condenser it would not " pass " sufficient alternating current to light the lamp. This proves that the condenser capacitance we have just used is of incorrect value for this particular line current frequency. It offers such a high reactance to the alternating current that this reactance or opposition amounts to practically the same thing as placing a very high resistance in the circuit and thereby limiting the current flow. This is why capacity reactance is measured in the same units of an ohm as resistance, because it is seen that it can retard or oppose a flow of alternating current.

Now, connect *A* and *B* to a variable air type receiving condenser. The lamp will not light in this instance. Therefore, the reactance of this condenser is also too great, for an insufficient charge is absorbed by the condenser dielectric (air in this instance). Consequently, the air condenser at this frequency will not have the *effect of passing* the alternating current The air dielectric and the low capacity of the condenser do not permit a high displacement current. The air condenser is also seen to act like a very high resistance in cutting down or opposing the current flow.

We will now remove the air condenser and connect in its place a mica or paper condenser of about 2.0 microfarads capacity. This time the lamp may glow dimly, because more current is now passing through the line up to the condenser and charging the condenser, and since the filament of the lamp must carry also the same current which is flowing to the condenser the lamp in this case has received sufficient heat from this current to become incandescent.

Remove the 2.0-mfd. condenser from the circuit and substitute a condenser having a capacitance of 7.0-mfd., and the lamp will no doubt glow brightly. Again substitute the 7.0-mfd. condenser for one of 15.0-mfd. capacity. The brilliancy of the lamp will this time be greatly increased. This follows because the high-capacity condensers require more current flow in the line to place a higher charge in them, and the frequency of the current is more suited to allow this result. That is, more electrons must flow through the circuit up to the larger condenser to " fill " it, causing a larger displacement current to flow than in the case of the smaller condenser.

Electrons do not actually pass through the dielectric material, al-

though they do pass through the external circuit to and from the condenser. The effect upon the circuit is, of course, to increase current flow when a greater mass of electrons flow up to and away from a condenser.

The frequency of the current which places the charge in the condenser in each case remains constant at 60 cycles because this was furnished by the power generators which supplied the a-c. mains, from which our experimental circuit is being operated. The frequency of the 110-volt supply being constant, the current was made to increase and decrease in strength by the variations in capacity.

An alternating current ammeter connected in series with this circuit also would have given us a visual indication, for, each time the lamp became more brilliant, the current reading indicated by the meter would show an increase. Each time the lamp became dim, the meter would be lower in reading. From this it is seen that the current varied in the circuit for the changes in capacity. This effect which a condenser produces in a circuit is called capacity reactance, and the reactance voltage causes a variation of current the same as might be caused by any given change of resistance.

Since the oppositions presented by capacity reactance have the effect of regulating current flow, it should be clear why capacity reactance is measured in the units of an ohm, and also why a condenser must have the correct capacitance for the particular frequency of the current which is charging it.

This experiment cannot be carried any further with the circuit at hand, but an additional fact may be noted. With the first two condensers connected in the circuit which would not pass sufficient current to light the lamp, if it were possible to change the frequency of the current supplied from the lighting mains, the smaller condensers which would not pass a 60-cycle alternating current would efficiently pass a current of some higher frequency.

Let us assume that with the first condenser connected again in the circuit the frequency of the charging current is made to increase from 60 cycles to 500 cycles, or more, and it is found that the lamp would now light under these conditions. *This would prove a very important point in the use of condensers.* When the capacity of a condenser is fixed and unchangeable it should be used in a circuit where a known frequency of current will flow. When the frequency of the current is not known, but the upper and lower limits through which it might change are known, then a variable condenser must be used so that the condenser may be set at the correct capacity for any given frequency of current. The latter process comes under the caption of "*tuning a*

circuit," where a change of capacity is made so that the capacity reactance of the circuit will be made as low as possible, thereby permitting maximum alternating current to flow.

The above experiment can be safely carried out, even though one of the condensers used might be short-circuited, because the 110-volt lamp must remain in the circuit, and it will act as a load on the 110-volt a-c. supply—the condensers simply being connected in series with it. A shorted condenser is one in which either the dielectric is fractured or the opposite plates touch each other. When a punctured condenser is placed in a circuit supplied with an e.m.f., the dielectric will not be capable of building up an electrostatic charge, or, in other words, displacement current will not flow, whereas conduction current will flow through the dielectric from plate to plate of the damaged condenser.

The sum of the effects of the resistance and the capacity reactance given to the circuit by the filament and the condenser will now be discussed. While the two oppositions are expressed in numerical values, in the unit of an ohm, *these values do not add to one another*, but the two oppositions combine as described in the following manner:

Other sections have completely explained the use of a simple vector diagram showing how to indicate the effect of capacity reactance and resistance in a circuit. Here is repeated only the part pertaining to the problem at hand in order to work out an easy practical solution from the experiment. Assume that the lamp resistance is 100 ohms and that the reactance (opposition), with one of the condensers connected in, is 50 ohms. The total opposition is then expressed as given in Fig. 117.

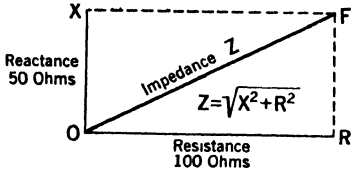

FIG. 117.—The impedance formula and its practical application in a vector diagram.

Horizontal line *OR* is drawn to equal the resistance of the lamp, 100 ohms. The vertical axis *OX* representing reactance is drawn in a direction at right angles, or 90 deg., from the horizontal axis *OR*, representing resistance. If a line is projected upward from *R* and a horizontal line is drawn from the point *X*, the two lines will intersect at *F*.

The figure just constructed is called a parallelogram, and a line drawn diagonally across as shown in the diagram is called the hypotenuse of the triangles formed. This line indicates the oppositions which both resistance and reactance offer, and is called impedance, for which we use a symbol *Z*. The inductance of the filament and connecting leads in Fig. 116 is negligible. The hypotenuse is equal to the sum of

of the sum of the squares of the other two sides of the triangle. Therefore, since one side is equal to 50 ohms and the other is equal to 100 ohms,

$$Z = \sqrt{50^2 + 100^2} = \sqrt{2500 + 10000} = \sqrt{12500} = 111.8 \text{ ohms.}$$

The effects of the condenser connected in and out of the circuit in Fig. 116 may be briefly stated.

With only the lamp in the circuit the total resistance was 100 ohms, and it is evident that by connecting a condenser having a reactance opposition of 50 ohms, the total resistance of the circuit was increased actually only a little over 11 ohms. This proves that reactances and resistances are not numerically added to find total oppositions.

Inductance Formula.—The inductance of a circuit is deduced from the formula for the frequency f. When the frequency of the current and the capacitance of a circuit are known, the inductance may then be deduced from the following formula:

Let

$$f = \frac{1}{2\pi\sqrt{LC}}$$

Then

$$f = \frac{1}{6.28\sqrt{LC}}$$

By transposition

$$L = \frac{1}{39.5 \times f^2 \times C}$$

Whereas

$$L = \frac{1}{39.5 \times f^2 \times C \times 10^8}$$

$\pi = 3.1416$

10^8 = factor used to cover unit quantity of flux, 100,000,000 lines of force.

The inductance of a coil is determined from its physical dimensions and also by the amount of flux which would permeate the circuit, using the unit quantity of 100,000,000 magnetic lines of force as a factor. Then

$$L = \frac{N^2 \times \mu_a \times A}{100{,}000{,}000 \times l}$$

where L = inductance of the coil in henrys;
N = number of turns of wire on the coil;
μ_a = permeability of the magnetic circuit;

A = cross-sectional area of inside of coil in square inches;
l = length of the core (if an iron core the length of the iron; if an air core the length of the coil).

Inductances in Series.—When inductances are connected in series, their individual values are added together to find the total inductance, in the same manner that the sum of the individual resistances in a series circuit equals the total resistance. (Refer to Fig. 118.)

Equation (1): $L = L_1 + L_2 + 2M$;
L = total inductance;
M = mutual inductance.

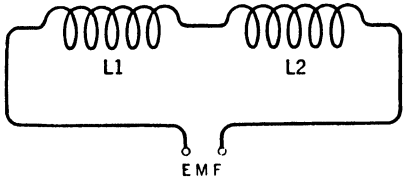

Fig. 118.

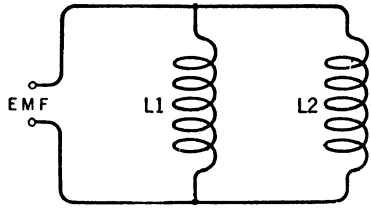

Fig. 119.

Fig. 118.—Inductances connected in series.
Fig. 119.—Inductances connected in parallel.

Inductances in Parallel.—When several inductances are connected in a parallel arrangement as shown in Fig. 119, the total inductance is computed as follows:

$$(2) \qquad L = \frac{L_1 \times L_2 - M^2}{L_1 + L_2 - 2M}$$

Note.—If the coils L_1 and L_2 are so far apart in the circuit that the mutual inductance M is so negligible that no effects are produced by one coil upon the other, then equations (1) and (2) are simplified. Refer to the explanation on "Mutual Inductance."

Inductance Calculation.—A practical formula for determining the approximate number of turns required in a coil where the inductance in henrys and also the physical size of the completed unit are predetermined is worked out below, where

$$N = \frac{L \times 25{,}300{,}000}{r^2 \times n \times K}$$

where N = the total number of turns to be wound on the coil.

The ratio of the length l of a coil to its diameter d is given as a constant, K, which equals diameter divided by length.

In a given problem where $\frac{d}{l} = \frac{3 \text{ inches}}{3 \text{ inches}}$ the ratio will be 1:1 and the constant K for this ratio equals 0.7. The number of turns included in 1 centimeter equals n. One-half the coil diameter equals r (radius), and this value squared gives the factor r^2. However, r must be in terms of centimeters when applied to the formula. (To change inches to centimeters multiply number of inches by 2.54.)

Certain types of coils are closely wound, that is, the insulation around adjacent turns touch; hence the diameter of the wire and the thickness of the insulation materials used will determine how many turns can be included in the given length of one centimeter. When coils are space-wound, the turns not touching, the diameter of the wire and its insulation plus the distance between the adjacent turns (the pitch of the winding) will determine how many turns can be wound in the given length of one centimeter.

Also let L equal the inductance in henrys and r^2 equal the radius of the coil in centimeters squared (the measurement r^2 is obtained by multiplying the radius, if given in inches, by 2.54, as above noted).

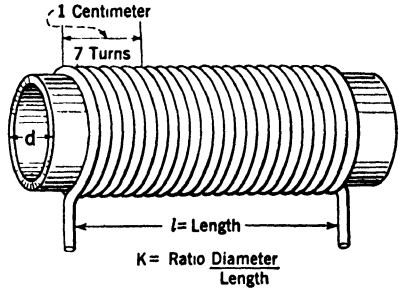

FIG. 120.—A method suggesting how the inductance of a solenoid may be calculated.

Example.—To construct a coil having the inductance of approximately 0.0002 henry the length and diameter of the coil must first be decided upon. Let the coil be 3 in. in length and 3 in. in diameter, as illustrated in Fig. 120. Along every centimeter of its length wind 7 turns of wire. By substitution of these predetermined values in the formula and then solving, the result will give the total number of turns necessary to provide the requisite inductance value.

The number of turns found by the solution of the foregoing formula will be only approximate. Whether the number of turns should be increased or decreased may be determined accurately by calibration with a known standard of inductance, or by actually connecting the inductance in a receiving set and noting the wavelength range covered when the tuning condenser is set at the upper and lower limits. By substitution:

$$N = \frac{.0002 \times 25{,}300{,}000}{3.8^2 \times 7 \times .7}$$

Hence

$$N = 71 \text{ turns.}$$

In the above formula the value 3.8^2 equals r^2, found by squaring the product of one-half the diameter in inches by the conversion factor 2.541; is equal to $(1.5 \times 2.54)^2$ is equal to $(3.8)^2$. K equals the diameter divided by the length or $\frac{d}{l}$ or $\frac{3}{3} = 1$. The constant K for the ratio 1 to 1 is 0.7.

How to Find Inductance to Match Known Capacity.—The inductance necessary to match a condenser of known capacitance, when employed in a circuit of predetermined frequency, may be found by inserting the known quantities in the following formula and evaluating:

$$\text{Inductance } L = \frac{1}{(2\pi)^2 \times f^2 \times C \times 10^8}.$$

where

f = frequency;
C = capacity in microfarads;
π = 3.1416;
$(2\pi)^2$ = 39.47;
10^8 = 100,000,000.

To Find Capacity to Match Known Inductance.—The capacitance of a condenser to be used with a known inductance in a circuit of predetermined frequency is found by employing a method similar to the one outlined in the preceding paragraph.

The basis of the capacity formula used in this case is the frequency formula, or

$$f = \frac{1}{2\pi\sqrt{LC}}.$$

By transposition and insertion of the necessary constants in the formula to give the final result in microfarads, the capacity is determined:

$$C = \frac{1}{(2\pi)^2 \times f^2 \times L \times 10^8}$$

The formula for capacity is derived from the frequency formula, and is almost similar to the one used to find inductance.

CHAPTER X

CONDENSERS—ELECTROSTATIC CAPACITY—CAPACITY MEASUREMENTS

The Condenser.—A condenser is a device capable of storing up electrical energy in electrostatic form. A simple condenser consists of two metal plates separated by an insulating medium (a non-conducting material) which will not pass or conduct an electrical current. The non-conducting material separating the plates is called the *dielectric*. For example, a simple condenser can be made by attaching a small sheet of tinfoil on each side of a sheet of glass. The tinfoil sheets should be somewhat smaller in dimension than the glass in order to prevent them from touching or coming in contact at the edges of the glass plate. If a small battery or dry cell is connected to this condenser by attaching a wire from each electrode terminal to respective tinfoil plates, the glass dielectric will become electrically charged. This electric charge is said to be in static form. This means that the electricity is at rest, and not in motion, as, for instance, when compared to the electricity that flows in a copper wire. Any conductor or group of conductors when insulated can hold a charge of electricity. This property is called *capacity*.

How a condenser is charged and why it discharges is described according to the electron theory The electron and its characteristics are fully explained in Chapter XI on Vacuum Tubes.

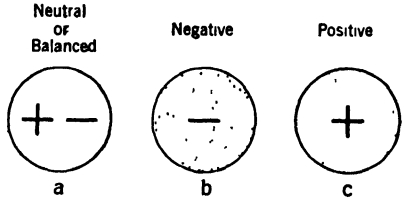

Fig. 121.—A graphical method of showing how either a negative or positive charge is the result of unbalancing a neutral charge.

All bodies contain a certain number of negative electrons, and when such bodies are in a neutral or normal state an exact balance of the positive and negative electricity exists. See sketch *a* in Fig. 121. A body possessing more than its regular number of electrons is said to be charged *negatively*, as shown by sketch *b* in the figure. When there is a deficiency or subtraction of electrons from the regular complement of

electrons in a body, the body is said to be charged in the *positive* sense, as shown in sketch *c*. There are various methods by which an electric charge may be induced in a dielectric material. For instance, it may be done by the application of heat or friction, or the impressing of an electromotive force across the respective surfaces of the dielectric. The latter method is the one that will concern us most in our work with radio circuits.

Almost everyone has performed the simple experiment of briskly rubbing a hard-rubber fountain pen on the coat sleeve, and has observed how small bits of paper, when touched by the rubber barrel of the pen, are attracted toward and adhere to the hard rubber and then drop off. What happens is that there has been an exchange of electronic energy. Electrons are assumed to pass between the coat material and the surface of the hard rubber.

In the instance just cited the neutral state of the hard rubber is unbalanced. In the second instance another exchange of electrons takes place between the hard rubber and the paper. When the materials actually touch, the action is such that the material which possesses more or less than its normal number of electrons will seek to take away the requisite electrons or, on the other hand, give up electrons to the other body with which it comes into contact. The exchange of electrons will equalize and restore normal conditions. This is called *neutralizing* the charge. It can thus be seen that electrons are not created; they exist in all matter, and will move, when forced to do so, from one place to another, or from one charged body to another, but always they are seeking to restore equilibrium.

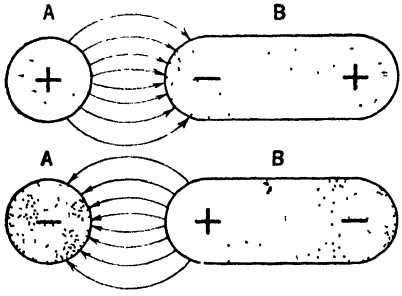

FIG. 122. — By means of electrons a charge is placed on the surface of a body *B* when in the region of a charged body *A*.

Rubbing catskin with sealing wax produces a negative electric charge on the surface of the sealing wax. Rubbing silk with glass produces a positive electric charge on the surface of the glass. In this process there has been no movement of electrons through the material, but rather the electrification is brought about because a displacement of electrons has occurred.

If we place a positively charged body *A*, as in Fig. 122, near a neutral body *B*, the negative electrons will be attracted to or displaced from the charged body, making this side negative and the opposite side positive. On the contrary, if a body *A*, previously charged negative,

is held close to a material having dielectric properties, the latter body *B*, while held under the influence of the charged body, will assume a positive charge on its surface at the side of nearest influence. The opposite side or end will become negative because of the displacement phenomenon. The drawing illustrates these effects.

Laws of Charged Bodies.—

1. An electric field is set up around every charged body. The field is called an electrostatic field.
2. Like charges of electricity repel each other. (See Fig. 123.)
3. Unlike charges attract each other. (See Fig. 123.)
4. The electric charge on a body is always on its surface.
5. The charge on a body is concentrated and more *intense* at a point of greatest curvature. On a flat surface the charge is distributed more evenly over the whole area.

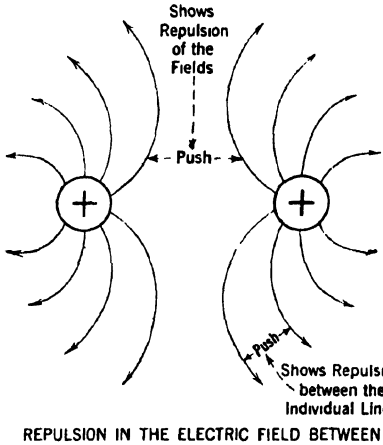

FIG. 123.—Showing the effect between like and unlike charged bodies.

Electrostatic Field. — When a charge of static electricity is acted upon by a pressure tending to move it in any space, the latter becomes an electrostatic field.

Between two oppositely charged bodies there always exists such a field. An electric field is set up between two bodies when one body assumes a higher charge of the same kind than the other body.

It will be observed that in all of the illustrations the field of force is represented by electrostatic lines, their number showing a definite intensity. These lines do not move, but they show a definite direction in which the electrical force acts, comparable to a person pulling on a heavy rope attached to an immovable object. No resulting movement would take place, but a tension nevertheless would exist along the rope, and a pulling force in a certain direction would be brought to bear on the immovable object.

Electrostatic lines of force repel each other. Because of this attribute, they reach out and occupy all of the space surrounding a charged body, within certain limits, thus forming an electric field. Fig. 123 illustrates this idea. For each unit charge of electricity there are 4π lines of force. When metal-conducting plates cover the opposite sides of a dielectric material and the plates are electrically charged, the lines of force thus produced exist *only* in the dielectric, ending upon the conductor surfaces, as shown in Figs. 124*a* and 124*b*. The presence of an electric field or electrostatic field (the terms are synonymous) can be

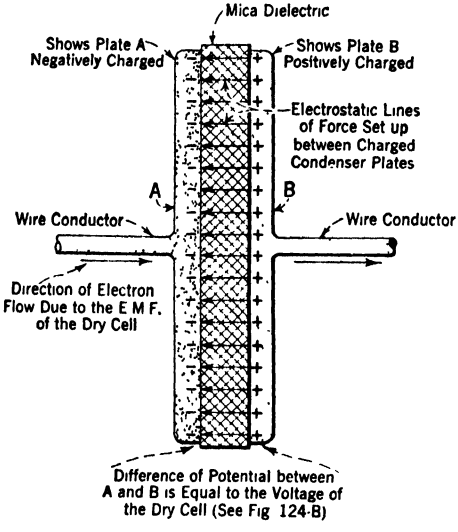

FIG. 124*a*.

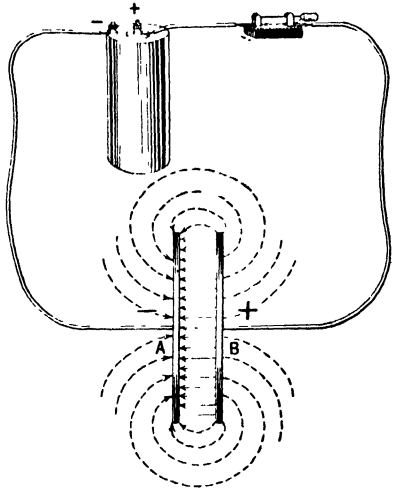

FIG. 124*b*.

FIG. 124*a*.—Illustrating the relative distribution of electrons on the plates of a charged condenser.

FIG. 124*b*.—An experimental circuit to illustrate the principle of how electrostatic lines of force are set up in the region of the plates of a charged condenser.

demonstrated by using very small particles of some dielectric material of high specific capacity, such as flint glass or mica. A sprinkling of the particles is made on a flat surface and placed in an electric field. The characteristic form of the field may be viewed by the arrangements which the dielectric particles will assume. It will be recalled that a magnetic field can be visualized by iron filings.

In Fig. 122 the positive and negative conditions of a charged body are shown, indicating that an abnormal strain now exists when compared to its original neutral condition—before it became charged. The strain under which the material is now placed is accountable for by

reason of the establishment of the electric field between the two surfaces. This static field is not thought to be due to an actual movement of electrons through the dielectric material, but to an electronic displacement in the atoms of the material whenever they are forced slightly from their former balance or normal arrangement. Refer to Fig. 124*b* where the condenser is charged by the e.m.f. of the dry cell. One plate or dielectric surface is said to be charged to a positive potential and the other to a negative potential. Potential is the term used to indicate surface on which a pressure is applied; it is analogous to the term level used in hydraulics. A charged dielectric material is said to hold on its respective surfaces a positive potential and a negative potential, producing a *difference of potential* across the material. Difference of potential and voltage are synonymous, hence, the potential difference between plates of a charged condenser is the electromotive force expressed in volts.

The property of a dielectric material when charged is such that it will seek to remove the strain as quickly as possible, and, if no external means are provided, the charge will gradually leak off, since no dielectrics are *perfect* insulators.

The various kinds of dielectric materials are listed in the table "Dielectric Constants" (in the Appendix) according to the amount of static charge or electricity they will hold. The quantity of electric charge that a given amount of air will hold is used as a basis for comparison. Air is called unity, or 1.

In Fig. 123 the individual electrostatic lines of force are graphically shown in their respective repelling effects when two similarly charged positive bodies lie within the influence of the static fields set up by one another. In the lower drawing of Fig. 123 two bodies hold opposite electric charges, the effect being illustrated by the reaching out of electrostatic lines forming an electric field between the two bodies. Observe that the individual lines always repel one another for all conditions.

Function of the Earth.—

1. Our earth is always in a neutral state with a balance of electrons.
2. All charged bodies touching the earth become neutral with the exception of a *bound charge.* A bound charge is shown in Fig. 125.
3. The earth is an *infinite* storehouse for electrons.
4. The earth is always at *zero potential.*

In Fig. 126, a positively charged body is shown connected to the earth. Electrons flow from the earth to the body and restore the elec-

tronic deficiency until the body becomes neutralized. A body with a negative potential upon it is connected to the earth and this time the excess electrons flow toward the earth as shown in Fig. 126, leaving the normal complement of electrons on the surface of the body, thus restoring it to a neutral state.

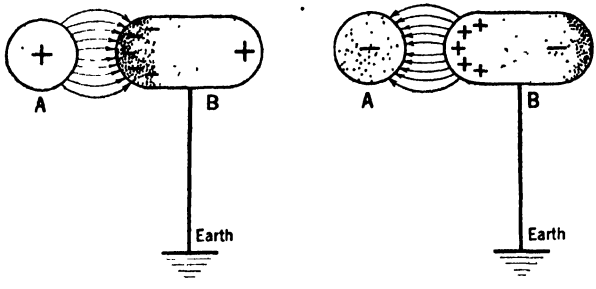

FIG. 125.—Illustrating the effect of a "bound" charge on the surface of a dielectric material when placed within the influence of another charged body.

The earth does *not force* up these electrons; there is no potential applied. They simply move into and out of *all materials* connected to the earth, thus holding all such bodies in a state of equilibrium. This explains a very important practical point in radio, for, when we make connections from parts of a circuit to the ground, we place that particular part of the circuit at *zero potential*, which is called *ground potential*.

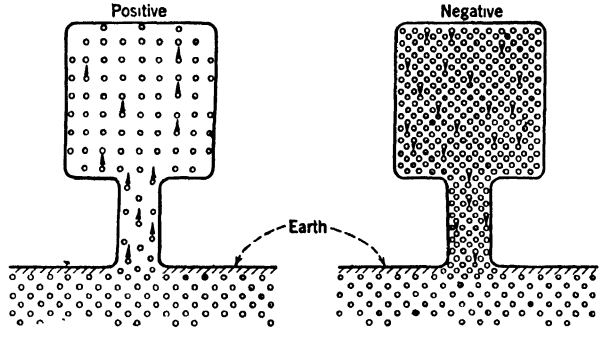

FIG. 126.—Showing how a body with either a positive or negative charge is neutralized when connected to earth. The dots represent the electron energy.

It can be seen that if either a positive or negative potential exists on any material, or at any part of a circuit which is not connected to the earth, that part or place must be at a certain potential with regard to the earth; that is, there is a difference of potential existing between the part referred to and the ground.

In Fig. 125 a bound charge is shown. As long as either the positively or negatively charged body is held near the body which is grounded (that is, connected to the earth), the body will hold the charge, at positive potential and negative potential, as illustrated, but the earth will neutralize that part *B* which is not under the influence of the exciting body.

Induction is the production of a *local charge* on the surface of a dielectric material due to the presence of other nearby charged bodies, as shown in Fig. 122.

Insulators and Conductors.—*A conductor* is a substance or material which offers a relatively low resistance or opposition to the flow of an electric current which is considered to be an actual movement or conduction of free electrons through the material when an electric pressure (e.m.f.) is applied. All metals, salt solutions, acid solutions, carbon, etc., are conductors.

An insulator is a non-conductor having few, if any, free electrons. The substance or material, therefore, offers a relatively high opposition to a flow of current, because there is practically no supply of free electrons which may be forced to move through the material when an electric pressure is applied. Current does not flow through an insulator; that is, current is not conducted through it because of this fact.

The best insulators will not permit any actual electron flow through them except an infinitesimal electron leakage. When extremely high overload voltages, far above the normal working potentials, are applied, the material will be subjected to an unusual strain which may cause it to puncture or fracture. The dielectric or condenser will then be useless as a device for storing up an electric charge.

Sulphur, hard-rubber, mica, paraffined paper, glass, and air are all insulators, and are known as dielectric materials. Wood, except when very dry, and water, are partial conductors and insulators.

The electrical phenomenon of building up an electrostatic charge upon a dielectric material exists in all substances, but in various degrees. Some materials are capable of being charged to higher potentials than others. It should be borne in mind that the force due to electrostatic lines produced by a charged dielectric material has different and independent characteristics from the force due to electromagnetic lines which surround every current-carrying conductor.

A static charge is distributed throughout a conductor when current flows. There is no concentration of the force at one point or location in the material. But, in an insulator, the charge is concentrated in the region near the exciting force which is inducing the charge. If the surface of the dielectric is flat the charge will spread out uniformly, but if round a heavier charge will collect in the region of greatest curvature.

In devices such as open spark gaps, the surfaces of the electrodes across which the spark discharges occur are either machined to a flat surface or rounded off, or brought to a pronounced point, as illustrated in the three views of Fig. 127. The effect of a concentration of charge on electrodes of different shapes is clearly shown. When the electrodes

are separated by an air gap of equal length and charged to the same potential, it is obvious that between the sharply pointed electrodes, as in the top view, there is a greater concentration of electrons resulting in a more intense spark discharge. In this case, only a very small surface area is presented to the intense electron bombardment, and the electrode material will overheat and burn away gradually. The electron flow is shown by the small dots.

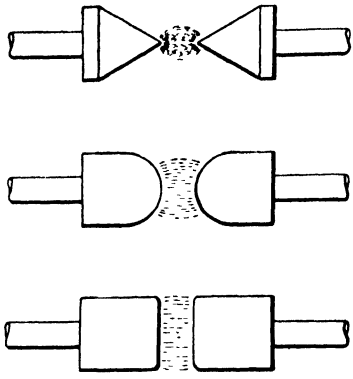

FIG. 127.—Illustrating the idea of the larger discharge between electrodes having a pronounced curvature when compared to the discharge between electrodes with flat surfaces.

In commercial apparatus the electrode surfaces are either rounded off, made spherical in shape, or the faces of the respective surfaces are finished flat. In either of the two latter constructions there is less burning away and less damage to the apparatus. This phenomenon of electric charges accumulating at points or sharp edges is well known and may be visualized in a Leyden jar condenser when the latter functions in a radio-frequency circuit. Along the edges of the copper coating will be seen electric discharges of a peculiar greenish-blue hue, called a *brush discharge*, given off in the surrounding space.

The electrodes of safety spark gaps connected across the secondary windings of (high voltage) transformers are usually spherical in shape, as in Fig. 128. The brass spheres will form a protective gap when placed across the windings where abnormal voltage surges are likely to develop. Whenever the voltage in the transformer builds up to a certain point it will break down the air resistance in the gap, and a spark discharge occurs between the electrodes, thus relieving the strain from the winding and its insulation. A third electrode is usually connected to the ground. It serves to neutralize any excess charges that may collect on either of the electrodes.

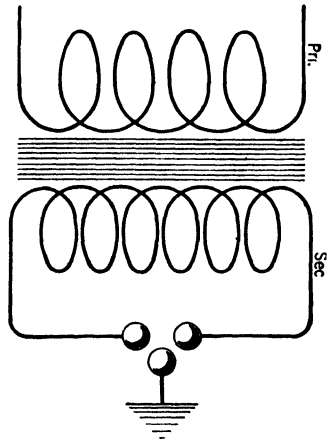

FIG. 128.—A safety gap is connected to the secondary winding of high-voltage transformers to relieve any damaging potential surges that are likely to develop.

The quenched type spark gap is an example of the third method of construction where respective surfaces are made flat. The disk surfaces of adjacent gaps are absolutely flat and parallel to one another, separated by an air space about .01 in. wide. As in the case of any spark gap, when the potential difference between the electrodes reaches a certain value and if the electrodes are close together, a spark discharge will be seen to occur. This flash of light with its accompanying heat is due, it is believed, to the ionization of the air in the gap, making the gap electrically conductive for a moment until the high potential energy

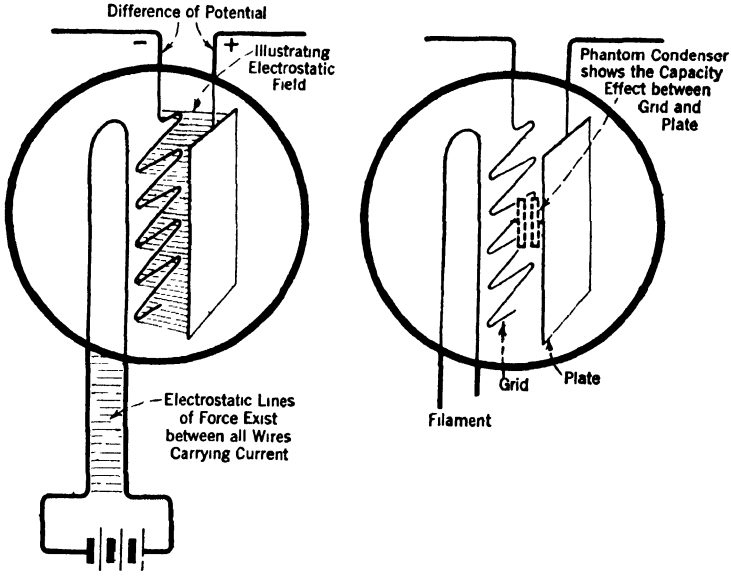

FIG. 129.—A simple means of showing how electrostatic lines of force are set up between conductors when a difference of potential exists.

is spent. The electrons are assumed to pass in a direction across the gap from the electrode having negative potential to the electrode having positive potential in an effort to restore a state of equilibrium or neutral condition.

Potential.—Potential or electromotive force is electrical pressure, and the potential upon a body depends chiefly upon the size of that body and the total charge resting on it. The presence of a nearby charged body to a body having no charge will raise the potential of the latter body. However, the potential on a charged body will be lowered if a nearby body holds an opposite charge, or even a lower charge of the same kind, or polarity.

This effect also exists in a vacuum tube. The metal plate and metal grid of a vacuum tube are separated and suspended in a vacuum. When these electrodes are charged to different potentials the intervening space assumes the characteristics of a dielectric; thus an electric field is set up as shown in Fig. 129. That is, the charged electrodes and the space between are similar in effect to the plates and dielectric of a charged condenser. While this inter-electrode capacity may be very small nevertheless it may be an objectionable feature when the tube is employed where currents of the higher radio-frequencies traverse the circuit. The capacity effect is illustrated by an imaginary (phantom) condenser shown in dotted lines connected between the grid and plate. A vacuum tube when used as a voltmeter is called a static voltmeter.

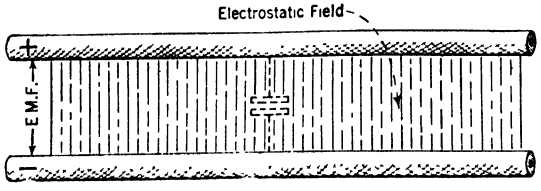

Fig. 130.—An electrostatic field is always present between conductors having a difference of potential.

Between all current-carrying wires or conductors there exists a difference of potential. Consequently, there is an electrostatic field set up between the wires similar to the field in a charged condenser. This condition is shown in Fig. 130. The conducting wires in land telephone lines are frequently enclosed in copper sheathing, or lead covering, to minimize the effect of the electric field around the conductors, which, if allowed to exist, will often cause the effect known as *cross talk* and, in addition, may permit extraneous noises to creep in.

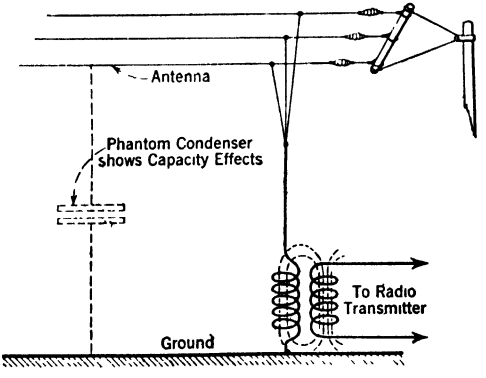

Fig. 130*a*.—The dotted lines represent the presence of capacity (distributed) between antenna and ground in an active antenna system.

As a practical explanation of the foregoing let us now consider the total effect within a vacuum tube when the plate and grid are electrically charged and the filament is emitting electrons. In the lower view of Fig. 131 it will be seen that the potential on the filament is marked as one potential point y, while the grid and plate together are considered the opposite potential point, marked x.

It should be apparent from previous explanations that the actual

potential existing in the region x at any particular moment depends upon the magnitude of difference between the plate and grid charges. Suppose the potential on the plate is 90 volts positive and that of the grid 4.5 volts negative The effective potential in region x, that is, the actual potential field strength at point x when compared to point y, is the difference between the plate and grid charges.

If, however, we reduce the negative grid charge to 2.0 volts, and at the same time retain 90 volts on the plate, this time the potential at x will be raised. The region at x is more positive than in the first case, because of the lower negative influence of the grid.

In the first case the potential difference between x and y is lower than in the second case. This is a practical illustration of the fundamental law of electrostatics. The grid and plate are charged bodies and their electrostatic fields influence the action of the radio circuits to which they are connected.

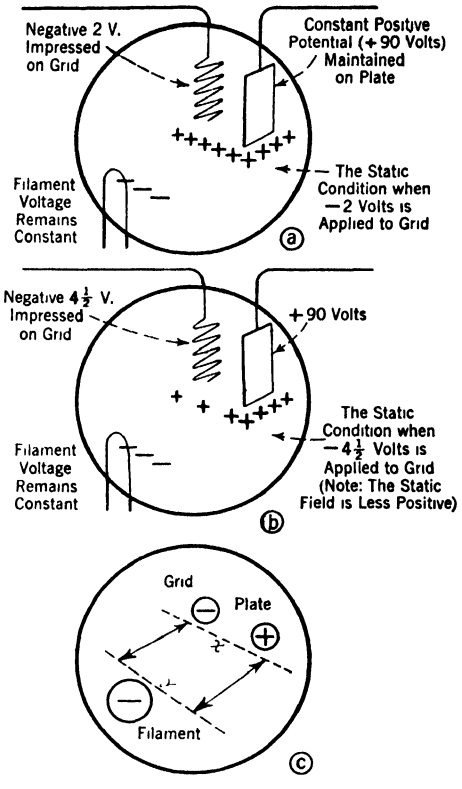

FIG 131.—A representation of the comparative effects between the electrodes in a vacuum tube

Fig. 132 illustrates charged bodies; the upper two hold the same electrical charge and therefore have the same quantity of electrons on their respective surfaces. This is also true of the two lower bodies. It is evident that in order to force more electrons upon the smaller surface *a* a greater pressure will be required than will be necessary to force the same additional number of electrons on the larger surface *b*. This is because all electrons have the same negative characteristics and repel one another. Any electrons which are added to a body must be *forced* upon that body to overcome the repulsion of the electrons which already exist on that body.

The larger surface is capable of holding a greater charge, its capacity

is increased, and the larger surface obviously will hold a greater number of static lines of force per unit area.

The smaller surface in this case might be fully charged, or saturated, and unable to accommodate any more electrons, whereas more charge can be placed upon the larger surface.

Naturally it will require a greater corresponding increase of potential to keep on increasing a charge when the surface is already charged almost to its maximum. This property of static forces has its practical application throughout all alternating current circuits, not only in the condenser, but in any other portion of the circuit capable of building up an electrostatic charge.

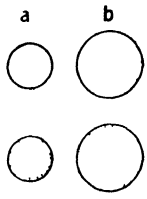

FIG. 132.—Illustrating that an electric charge of a certain magnitude is more concentrated on a small body than on a large one.

A condenser may be constructed as suggested in a foregoing paragraph. Select a sheet of mica for the dielectric; cover the two opposite surfaces with sheets of aluminum, copper, brass, tinfoil, or any other conductor which will serve as a distributor of the charges over the greatest area of the dielectric. Hereafter the two metal sheets which cover the dielectric will be called *the plates of the condenser.*

In Fig. 124*b* a condenser having air as its dielectric is shown connected to the dry cell with two wires, one attached to the negative electrode and the other to the positive electrode. Let the e.m.f. of the dry cell be 1.5 volts. This amount of electrical pressure then is applied to the plates of the condenser. The condenser will become charged electrostatically when the battery circuit is formed around the dielectric. The following paragraphs will complete the explanation of the theory of charge and discharge.

Condenser Charge and Discharge Analyzed.—As stated in the electron theory discussion, when an e.m.f. is applied to a conductor, the free electrons in that conductor will move from the negative to the positive electrodes in the external circuit.

The external circuit is the one connected *around* or *to* a source of e.m.f. The internal circuit is within the dry cell which is supplying the e.m.f.

The movement of the free electrons under the electromotive force or electric pressure is often spoken of as an *electron drift.* It is this electronic movement that represents actual conduction or flow of current. It should be understood that the dielectric of a condenser, when connected between the electrodes of a dry cell, will not permit actual conduction of electrons through it, because the dielectric *blocks* the

electron flow. The electrons can move only through the wire from the negative side of the dry cell up to and accumulate upon the plate of the condenser. This action is illustrated diagrammatically in Fig. 124*a*. This explains why current will not flow *continuously* in a direct current circuit when a condenser is placed in series with the circuit.

Let us assume that before an e.m.f. was applied to the condenser there was no excess electron accumulation on plate *A*, but when an e.m.f. is applied to the condenser, quantities of electrons will flow rapidly to plate *A*, as shown in Fig. 124*a*, due to the electrical pressure supplied, in this case, by a dry cell.

Now, as electrons continue to *pile up* on plate *A*, its negative potential is raised, and, therefore, those electrons which are flowing toward this plate must overcome the repulsion of those already on the plate. This may be construed as follows:

1. The current flow is decreasing while the negative charge on plate *A* becomes higher. When sufficient electrons accumulate on the plate to make the plate equal in negative potential value to that of the dry cell, then electrons will cease moving. When this happens, there is no pressure difference between plate *A* and the negative electrode of the cell. In other words, the current stops flowing when the potential at the condenser plate is equal to the applied electromotive force.

2. Next consider what takes place at the positive plate and positive side of the circuit. According to the accepted electron theory, the negative electrons already existed in the circuit, but they were distributed uniformly through the conducting materials in balanced quantities; that is, in no part of the circuit was there an excess or over-abundance of electrons.

With this fact in mind, it is obvious that when a certain number of electrons move under a given pressure toward a given side or place in a circuit, the same number of electrons must flow from other portions of the circuit.

To make this point clear, assume some arbitrary value. Suppose one hundred billion electrons move toward and are added to the negative side *A* in Fig. 124*a*. Then one hundred billion electrons must have moved from the opposite side of the circuit *B*, leaving the latter side deficient in that number of electrons.

This places side *B* at a *positive* potential with respect to side *A*, which receives the electron accumulation; hence, between sides *A* and *B* there is a difference of potential.

It has been stated that when the condenser is fully charged the current

ceases to flow. This happens because the negative potential at the condenser plate then equals the negative potential of the cell. The difference in pressure across the charged condenser is equal to the difference in pressure, or e.m.f., across the charging source. If the e.m.f. of the cell is 1.5 volts, the charge in the condenser also represents an e.m.f. of 1.5 volts; that is, there is a potential difference of 1.5 volts across the condenser.

The movement of electron energy while the condenser charges is shown by the long arrows, and this direction is toward the negative plate and away from the positive plate.

If a sensitive direct current ammeter should be inserted in series with the wires connecting the dry cell and condenser, a momentary deflection of the indicating needle would be seen in a certain direction. This would prove that current flows to a condenser only while it is charging.

When plates *A* and *B* receive opposite electric charges, the attraction which these unlike charges bear toward each other places the dielectric under a strain. The electrostatic lines of force shown in the drawing represent this effect. If the charged condenser is carefully removed from the circuit, so that the plates or plate terminals do not touch any conducting material, the static charge may remain on the dielectric for some time. It could then be said that a *condenser has the ability for building up and storing an electric charge.*

The following two important facts relating to the charging of a condenser will be useful to all students.

1. It requires a certain length of time to build up the charge in a condenser.
2. A voltage or electric pressure is built up in a charged condenser. This voltage is effective in any electrical circuit in a similar way to electromotive force derived from any other source.

It is often found in practical work that certain condensers having a large capacity and employing a good dielectric material, such as mica, for example, are capable of retaining an electric charge for long periods when kept on open circuit. The charge may leak off more rapidly in low capacity condensers using paper or paraffin dielectrics.

Condenser Discharge Analyzed.—A charged condenser is under strain and it always seeks to relieve its pressure. It will do so provided any conducting medium is connected between its plates. The condenser upon discharging supplies a voltage to the circuit.

A circuit consisting of resistance and inductance in series combina-

tion is shown in Fig. 132*a*, connected to a charged condenser. When the condenser discharges, current will flow in this circuit through resistor R and inductance L as in the direction marked by the arrows.

Resistor R and inductance L represent and are loads on the circuit, inasmuch as the voltage in the condenser must overcome the oppositions represented by R and L before current will flow. It is to be expected that less current will now flow during the condenser discharge because of the introduction of the resistance in the circuit, for resistance always dissipates some energy in the form of heat.

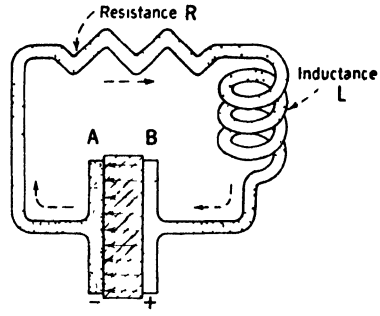

FIG. 132*a*.—Showing the electron flow in a circuit when a condenser discharges as from negative plate A to positive plate B.

The pressure or voltage in the condenser is now applied to R-L circuit and electrons will flow from the negative plate A to the positive plate B in the direction of the arrows. Careful observation will show that the electrons flow through the circuit in a direction opposite to their movement when the condenser was charging, as in Fig. 124*a*.

The excess electrons at A (Fig. 132*a*) will move toward plate B, the place of low electron density, and the action is such that the number of electrons restored to plate B will be equivalent to the quantity lost by this plate when the condenser was charged in the first place.

When the redistribution of electrons from one side of the circuit to the other is completed, the equilibrium will have been established, but this is not accomplished until plates A and B resume their normal or neutral state. The condenser is said to have given up its stored energy, which was in the form of an electrostatic field, and we find that it has returned its energy to the circuit in the form of an electromotive force, or voltage applied to the circuit.

The flow of current in the circuit composed of R and L, under the e.m.f. supplied by the discharging condenser, might be visualized by inserting a sensitive direct current reading ammeter in series with the circuit, as explained in a preceding paragraph. The indicating needle will give a momentary deflection, but this time in the opposite direction to its movement across the scale at the time the condenser was being charged by the dry cell. This proves that the flow of current in the circuit reverses direction upon discharge.

From these simple facts we can conclude that when a condenser is charged to a certain potential and it discharges, current will flow in

the circuit—first in one direction, then in the opposite direction—although the current does not actually flow through the condenser. Therefore it might be stated that electrons flow up to and away from the plates of a condenser, or the expression is often heard, *current flows into and out of a condenser.*

The occurrences that take place in the dielectric material are thought to be a certain displacement of the electrons in the atoms of the dielectric material. When the dielectric is charged it is thought that the electrons are shifted slightly from the usual positions they occupy in the complicated scheme within their revolving orbits. It is important to remember that the energy possessed by current flowing to the condenser under any applied e.m.f. will charge the dielectric. This transition of energy from one form to another form is possible because of the displacement of electrons in the atoms of the dielectric material as just stated. Moreover, it requires a small fractional part of a second to charge and discharge a condenser. The interval of time becomes an important factor when currents must flow into and out of a condenser, charging it and discharging it in a *given time.*

Condenser Charged by an Alternating Electromotive Force.—Diagrams *A* and *B* in Fig. 133 show how a condenser is charged by an alternating electromotive force. The primary and secondary windings are illustrated. When an alternating current flows in the primary (*Pri.*) the changing flux around *Pri.* induces an alternating voltage in secondary *Sec.* The curve of one cycle of this induced alternating e.m.f. is shown. One cycle is sufficient to explain the action.

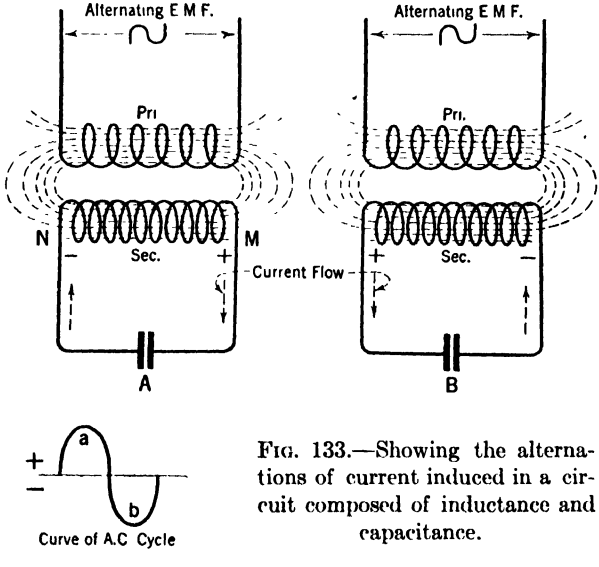

FIG. 133.—Showing the alternations of current induced in a circuit composed of inductance and capacitance.

During the first half-cycle, *a*, which arbitrarily may be called the positive alternation, the induced e.m.f. in *Sec.* will cause a flow of current in the direction indicated by the arrows in view *A*. The condenser

plates will then receive a positive and negative charge respectively by this current. The current flows in one direction toward the negative plate in exactly the same manner as previously described when a condenser was charged by current flow due to the e.m.f. of the dry cell.

During the second half-cycle indicated by alternation *b* the induced voltage in the secondary is reversed. The side of the winding that was positive during the first alternation now becomes negative, and the plate connected to this side that was positive during the first alternation also becomes negative. The direction of flow is marked by arrows. Hence, current will flow to the condenser and from the condenser at every cycle of alternating electromotive force applied to it.

A Simple Analogy of Condenser Charge and Discharge.—A mechanical analogy is given in Fig. 134 of an alternating e.m.f. applied to a condenser. If air is forced through the pipe by the propeller in the direction of the solid arrows, the compressing of the air will cause a bending strain upon the diaphragm. When the motion of the propeller is reversed the air currents move in an opposite direction, shown by the broken line arrows, and the bending strain of the diaphragm is reversed. The reversal of the air pressure and change in movement of the air currents in the pipe are similar to an alternating electromotive force (pressure) and a flow of alternating current. The bending strain of the diaphragm might be compared to the dielectric strain or displacement in the condenser, where electrons collect at a point under pressure.

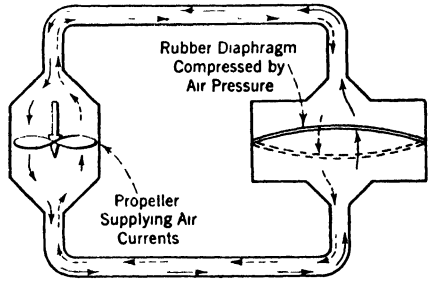

FIG. 134.—A mechanical analogy of the charge and discharge of a condenser.

It must be remembered that the dielectric material does not change its shape or form when it receives a charge or discharge; hence, the analogy is not sufficient to illustrate the true action.

It is evident that capacity closely resembles the properties of elasticity in matter when viewed at certain angles. All condensers irrespective of their size, shape or materials have the properties and characteristics outlined in the preceding paragraphs.

We can now recognize two important factors in the use of a condenser:

1. The capacity of the condenser must be capable of efficiently passing an alternating current of a given frequency.

2. The dielectric material must withstand overload voltages that may possibly be impressed upon it, without its insulating qualities breaking down.

Dielectric Constant.—The different dielectric mediums conduct static lines of force with more or less ease, depending upon their inherent nature.

Air at ordinary pressure is taken as unity, 1, and all other materials are compared to it. A certain grade of mica may have a dielectric constant of 3, meaning that a condenser using a sheet of mica between its plates will permit three times as much static electricity to be stored up as will an air condenser of similar size.

A table of dielectric constants is given in the Appendix.

Capacity.—Farad.—Capacity is the quantity of electricity that a body will take on or hold under a given pressure. In other words, the term capacity refers to the production of a potential difference between condenser plates for a given electrostatic charge held by the dielectric. When a condenser can be given a charge of one coulomb, thus raising the potential difference between its plate one volt, the condenser is said to have a unit capacity of one farad. One coulomb is a unit quantity of electricity; and when one coulomb of electricity passes a given point in a circuit in one second, then the rate of flow of current is one ampere. Thus when a given difference of potential is applied to a condenser having a certain capacity, it will always store a definite quantity of electricity.

The interrelation of capacity, charge and voltage is constant for a given condenser. That is:

$$C = \frac{Q}{P},$$

where

C = capacity in farads;
Q = quantity or charge in coulombs (one coulomb equals 1 ampere-second);
P = Difference of potential in volts (e.m.f.) between condenser plates.

A farad is a very large unit of capacity and is derived from other units by mathematical deduction. It has no practical significance of its own, for instance, like an ohm, or volt, or ampere. The last three terms express standard units of electrical measurement with which we are familiar and use in our daily work.

There is no condenser having a capacity of one farad. If one could be manufactured it might be so huge that it would rival the proportions of the Woolworth Building.

The following submultiples of a farad are used for practical units in calculation: 1/1,000,000th of a farad is equal to one microfarad. Micro means 1/1,000,000. The next smaller unit that may be used is one micro-microfarad (also called picafarad), or one millionth of one-millionth of a farad, which may be written decimally .000001 microfarad. For example: Suppose the capacitance of a condenser is 0.0005 microfarad, this value could be expressed in more convenient terms as equivalent to 500 micro-microfarads.

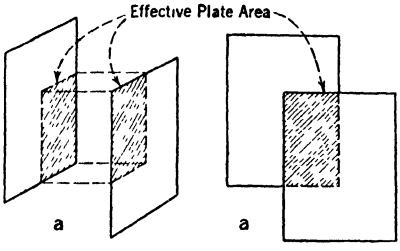

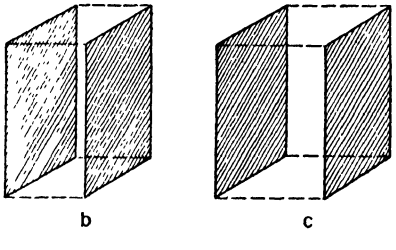

FIG. 135.

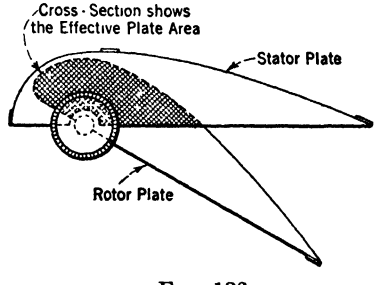

FIG. 136.

FIG. 135.—A means of showing that the effective plate area is dependent upon the relative positions of condenser plates.

FIG. 136.—Showing design of the plates of a variable air-type condenser.

The capacitance of a condenser is dependent upon its dimensions and the nature of the dielectric material. The governing factors are:

1. The capacity of a condenser depends upon and is directly proportional to the size of the plates. The plates must be in alignment or positioned opposite one another in order to obtain maximum effective area. Fig. 135 shows the principles of effective plate area. Fig. 136 is a practical application of this principle.
2. Capacity is directly proportional to the dielectric constant of the insulating medium.
3. Capacity is inversely proportional to the separation between the plates, or the thickness of the dielectric material.

The mathematical expression showing the relation between these factors is:

$$C = \frac{2248 \times K \times a}{10^{10} \times d}$$

where

K = the dielectric constant;
a = effective plate area in square inches, covering both sides of the plate;
d = the distance between the plates in inches;
10^{10} = numerical constant used to give results in units of the microfarad.

Let us apply this formula to the solution of the simple problem illustrated in Fig. 137. The condenser shown is constructed of only one sheet of mica and two metal plates. The particular grade of mica used as the dielectric has a constant, let us say, of 3.0 and its thickness is $\frac{1}{4}$ in. Each plate dimension is 4 by 5 in.

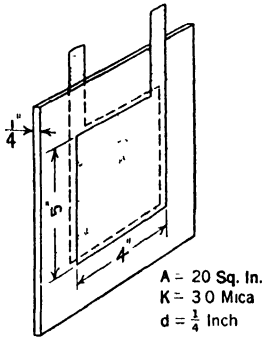

Problem in Capacity

FIG. 137.—A condenser constructed of a mica dielectric and two sheets of tinfoil.

The plates are aligned exactly opposite each other, resulting in 20 sq. in. of effective area. The capacity is computed by the substitution of the predetermined values in the formula, that is:

$$C = \frac{2248 \times 3.0 \times 20}{10^{10} \times \frac{1}{4}} = \frac{134{,}880}{10^{10} \times \frac{1}{4}}$$

$$= \frac{134{,}880 \times 4}{10{,}000{,}000{,}000} = .000053 \text{ microfarad.}$$

NOTE: 10^{10} = 10 raised to the 10th power or 10 multiplied by itself 9 times.

Condensers Connected in Parallel Arrangement.—A number of condensers connected together comprise a *bank* or *battery* of condensers. When two or more condensers are connected in parallel arrangement, plates A and A of one set are connected together and plates B and B of the opposite set are connected together, as shown in the left-hand sketch in Fig. 138.

A parallel grouping of condensers has the effect of greatly increasing the effective plate area, to which condenser capacity is directly proportional, as the two small sketches intend to show. Since the capacity of any individual condenser increases in direct proportion to any increase

in its effective plate area, the same result is to be expected in parallel grouping of condensers as just stated.

When condensers are connected in parallel, the resulting capacity is equal to the sum of the individual capacities. That is:

$$C_T = C_1 + C_2 + C_3, \text{ etc.}$$

Let C_T = total capacity of the circuit.

Problem A.—Solve the problem in Fig. 138 showing three condensers connected in parallel. Find the total capacity. Substituting capacities in the formula, then

$$C_T = .002 + .003 + .005.$$

Whence C_T = .01 microfarad, total capacity.

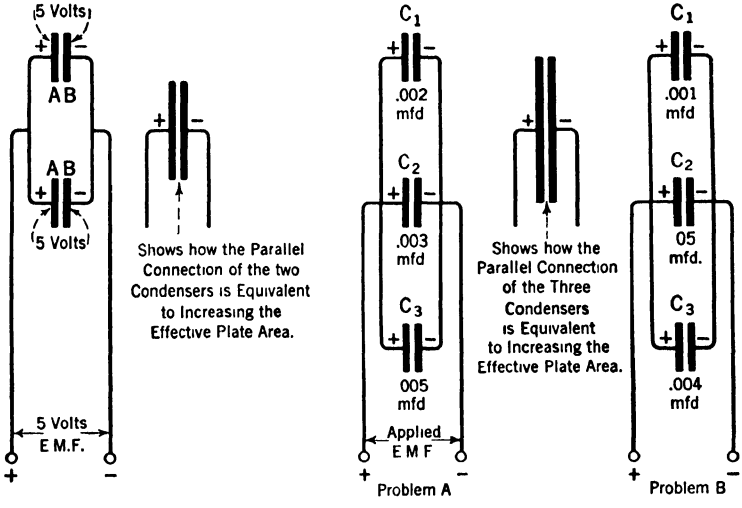

FIG. 138.—Sketches showing that when condensers are connected in parallel the effective plate area is increased, to which the capacity is directly proportional.

The polarity is also indicated in the illustration. It shows that all the plates on one side are charged to a negative potential and all the plates on the opposite side are charged to a positive potential, when connected to a source of electromotive force. Moreover, it is apparent that the voltage on each condenser is the same.

Problem B.—In the second problem of Fig. 138, three condensers are connected in parallel as shown. To calculate the total capacity, proceed as follows:

$$C_T = .001 + .05 + .004$$

Whence C_T = .055 microfarad, total capacity.

The calculation of capacities in parallel is identical to that of resist-

ances in series. The capacity of the group increases in direct proportion to the values of the individual condensers employed.

Condensers Connected in Series Arrangement.—When two or more condensers are connected in series combination the plate of one condenser is connected to the plate of another condenser, and the opposite plate of the latter condenser is connected to the plate of some other condenser, and so on, as shown in Fig. 139. Plate *A* of one condenser is connected to *B* of another condenser, and so on, as illustrated in the diagram.

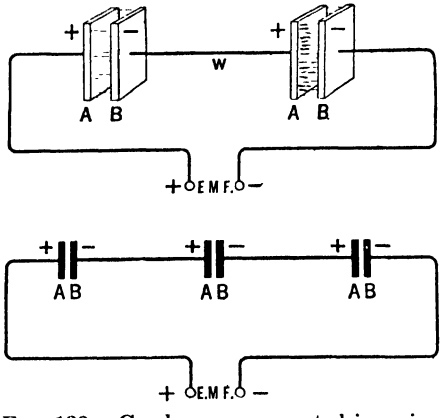

FIG. 139.—Condensers connected in series. The series connection has the effect of greatly increasing the dielectric thickness to which capacity is inversely proportional.

The polarity at the plates of each respective condenser is shown. It indicates that when one plate of one condenser is charged negatively the plate of an adjoining condenser is charged positively. For instance, plate *B* of the first condenser in the upper drawing is negative, as this plate is connected by means of wire, *w*, to plate *A* of the second condenser, charging this plate to a positive potential.

This distribution of charges from plate to plate is governed by electrostatic laws. If a body is charged to a negative potential, electrons are taken from another body, leaving the latter body in a positively charged condition, due to the withdrawal of electrons. It might also be said that the charge on one plate of a condenser is a displacement charge from the next adjacent plate.

The e.m.f.'s or voltages impressed across the condensers in a series grouping are not necessarily the same unless their capacities are equal, because the voltage drop, E_c, across each condenser is dependent upon and equal to the charge of the series arrangement divided by the capacity of an individual condenser. The voltage drop is also inversely proportional to the frequency of the circuit and the capacity of individual condensers. Hence, although condensers may be of similar voltage rating a lower capacity in a series combination will be subjected to a higher potential.

When condensers are connected in series and the circuit is supplied with an alternating e.m.f., the voltage drop or potential difference across condensers of higher capacities will be less than that across low

capacities. This fact can be deduced from the fundamental capacity formula, where $C = \frac{Q}{P}$ or by transposition $P = \frac{Q}{C}$. The voltage drop or potential difference across condenser C_3 in Fig. 140 is less than that across C_1, because the capacity of C_3 is greater than that of C_1, the voltage drop across C_1 will be less than that across C_2 for the same reason, and the voltage drop across C_1 will be less than that across C_4.

It is advisable to use condensers of equal values of capacity in a series grouping so that no condenser will be overloaded.

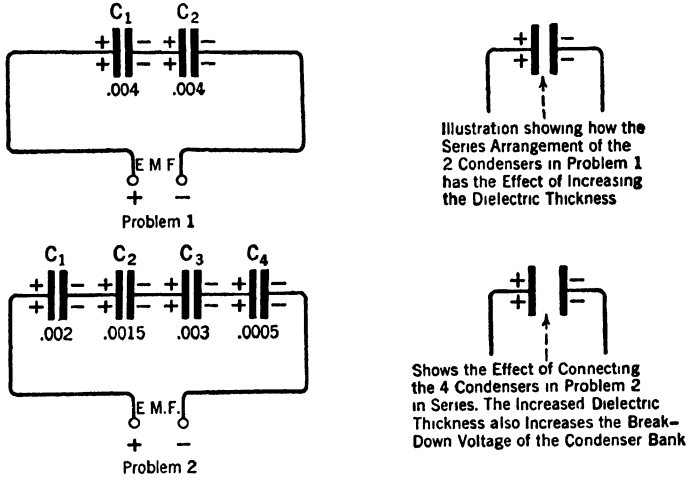

FIG. 140.—Showing why the capacity of a circuit is decreased when condensers are connected in series.

The effect of connecting condensers in series is to increase the distance of separation between the plates, as the two small sketches in Fig. 140 intend to show.

Since the capacity of the condenser decreases in direct proportion to an increase in the thickness of the dielectric, it follows that the capacity of a circuit is decreased when condensers are connected in series. This may be expressed in the following manner.

The total capacity of condensers connected in series is equal to the reciprocal of the sum of the reciprocals of the capacities of the individual condensers. It may be interpreted, when a computation of values is desired, by the use of the following formula:

$$C_T = \frac{1}{\frac{1}{C_1} + \frac{1}{C_2} + \frac{1}{C_3}, \text{ etc.}}$$

in which

C_T = the total capacity.

The working out of this equation is simplified by removing the reciprocal from the right side and placing it at the left side. The equality of the respective right and left members is still maintained, and the above formula will now read:

$$\frac{1}{C_T} = \frac{1}{C_1} + \frac{1}{C_2} + \frac{1}{C_3}, \text{ etc.}$$

Problem.—Substitute in the formula the capacity values of the four condensers shown in Problem 2, Fig. 140. Find the resultant capacity.

Here

$$\frac{1}{C_T} = \frac{1}{.002} + \frac{1}{.0015} + \frac{1}{.003} + \frac{1}{0005}.$$

(.03 is the common denominator)

or

$$\frac{1}{C_T} = \frac{15 + 20 + 10 + 60}{.03} = \frac{105}{.03}.$$

Now invert both sides of the equation and

$$C_T = \frac{.03}{105},$$

whence

C_T = .00028 microfarad, total capacity.

From the above observation it should be clear that in a series arrangement of condensers the total capacity of the bank is *always less* than the capacity of any individual capacity in that bank.

In the problem just cited, the capacity of the smallest condenser is .0005 microfarad and the total capacity of the bank was found to be lower, or .00028 microfarad. This proves the effect on the circuit when condensers are connected in series.

When several condensers of identical capacity are connected in series combination the total capacity is easily computed by merely dividing the capacity of any one of the condensers (since they are all equal) by the number of condensers employed. For example: If four condensers, each 0.004 microfarad, are connected in series the total capacity is equal to 0.004 divided by 4, or 0.001 microfarad, the total capacity. With only two condensers in series and each one 0.004 microfarad capacity in Problem 1, Fig. 140, the total capacity is equal to 0.002 microfarad.

Fixed and Variable Condensers in Combination.—There is a contingency which may be encountered where two condensers of unequal capacities are connected in series, the capacity of one being fixed and the other variable. (Refer to Fig. 141). For example, select a capacity which is greater for the variable condenser than for the fixed condenser.

Let

C_1 = capacity of fixed condenser = .0005 mfd.

C_2 = capacity of variable condenser = .0009 mfd.

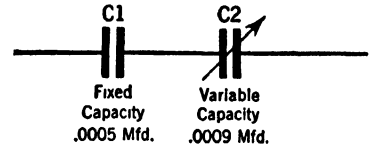

FIG. 141.—Showing an arrangement where a fixed and a variable condenser are connected in series.

With the variable condenser set at maximum, the capacity of both condensers is computed by employing the reciprocal formula previously given:

$$C_T = \frac{1}{\frac{1}{C_1} + \frac{1}{C_2}} \text{ etc.}$$

Using the values chosen for C_1 and C_2,

$$C_T = \frac{1}{\frac{1}{.0005} + \frac{1}{.0009}} = \frac{1}{\frac{14}{.0045}} = 1 \div \frac{14}{.0045} = 1 \times \frac{.0045}{14} = \frac{.0045}{14}$$

whence

C_T = .000321 mfd. total capacity.

The total capacity of the circuit is raised when the capacity of the variable condenser is increased. The total capacity of the circuit increases and approaches that of the fixed condenser when the variable condenser is increased, but the total capacity of the circuit will *never* become greater, nor can it equal the capacity of the fixed condenser.

It is evident that the resultant capacity will always be less than that of the fixed condenser, even though the maximum of the variable condenser is used. This proves that the total capacity of series grouping is always less than the capacity of the smallest individual one in the series.

The calculation of capacities in series is exactly similar to that of resistances in parallel. The capacity of the total group decreases in indirect proportion (inverse ratio) to the individual capacities.

CHAPTER XI

VACUUM TUBES

NATURE, FUNCTIONS, AND TERMINOLOGY

ALMOST everywhere we may observe some of the results of electrical phenomena, such as the production of light, heat, power and radio communication. This electrical energy takes different forms. For instance, magnetic lines of force, similar in characteristics to the magnetic field of a horseshoe magnet, surround every conductor or coil when current flows through the wires, producing an electromagnetic field. This field exists as a strain in the medium surrounding the conductor. Another form of electric phenomenon, known as a *static charge*, may be built up on the surfaces of insulating materials called *dielectrics*, such as mica, glass, wax paper and atmospheric air. When a given electrical pressure (e.m.f.) is applied to material of this kind, current will not flow through, as in the case of a metal conductor like wire, but, rather, a displacement of current takes place in the dielectric and the energy is held at rest—under a tension, as it were—producing a stationary field of force, termed an electrostatic field. If each side of a dielectric material is covered with a thin metal plate, these plates will serve to distribute the charge over a greater area. Such a device, consisting of two metal plates separated by an insulating material, is called a condenser and has the ability to store up a charge of electricity.

When current flows in a metal conductor, there is always some dissipation of energy in the form of heat, but where heat serves no useful purpose in the function of an electrical circuit, it is considered a loss. On the other hand, when an increase of temperature in a conductor is required, as in the lighting of the filaments of a vacuum tube, the heat is not considered a loss because here it serves a useful purpose. Under certain conditions the electrical strains in the medium which surround metal conductors, and also a dielectric medium (air for example), give rise to the movement of energy out into space and a wave motion takes place, as for example, when an antenna system is energized. The length of a radio wave propagated in this manner depends upon the rate at which the electrical fields or forces, referred to above, are made to

change. This electrical vibration or motion can be timed; that is, the frequency or rate of change can be controlled by a regulation of the electrical constants, namely, the inductance and capacitance of the circuit. Light, heat, and radio waves are all similar in their characteristics, and differ only with respect to their wave lengths; those of light and heat being very short.

In radio circuits we deal chiefly with the utilization of the forces exerted by the electromagnetic and electrostatic fields, resulting from current flowing in the circuits. It is important to understand two factors: how the forces or pressures which cause current to flow are generated, and the nature of the movement. The unknown causes which produce the known results in electricity may be explained clearly when we apply the theory of atomic structure, based upon the assumption that the smallest known division of matter is a tiny, electrically charged particle called an *electron*, which is always in a rapid state of vibration bound to a *nucleus* or center of opposite attraction. By various methods, an electron can be detached from its nucleus and forced to move from one place to another through the following media, solids, liquids, gases and vacua, under the influence of an electrical difference of potential which is equivalent to pressure applied between two points in the medium. It is the motion of countless millions of these little electrons that represents the conduction of electricity called *current flow*.

This theory, known as the *Electron Theory*, is accepted in general by the scientific world, for it seems logical and conclusive. With it we may account for many of the electrical phenomena and laws governing the behavior of electricity in all its phases. The theory is of particular value since the vacuum tube now takes the same leading position in the field of radio transmission that it has held in the reception of radio signals. Therefore, we shall deal with the electronic theory with special application to tube functioning.

After many years of research and experimentation by physicists, the manufacture of high-power tubes in commercial quantities has been made possible. The tubes are constructed very ruggedly and are capable of delivering large output energy for long periods without any decrease in their efficiency. The success of this research is proven by the exclusive use of the vacuum tube in the field of broadcasting speech and music, and the great increase in the number of installations of tube transmitters for the dispatch of radio telegraph messages. The flexibility of the vacuum tube—one of the most sensitive devices known to man—is apparent, and we shall here review briefly its adaptability to the various phases necessary to carry on radio communication.

Oscillator.—The vacuum tube, connected in a suitable circuit and

used as an *oscillator*, will generate undamped radio-frequency oscillations, that is, an alternating current, the frequency and amplitude intensity of which is consistently maintained. When such a circuit is connected or coupled to an antenna system it will radiate a continuous wave motion to great distances.

Continuous waves are alternating electric waves in space, the amplitude and frequency of which are constant. The resonant circuits in which the tube is functioning as an oscillator may be adjusted quickly, and sharpness of tuning is more pronounced than in circuits using the spark form of transmission; the latter radiates a damped wave, one in which the amplitudes periodically build up and diminish in successive groups. The energy emanating from a spark transmitter is broad in character; that is, it spreads over a comparatively large band of wavelengths, and may create interference in receiving sets not tuned to receive its signals.

Power Amplifier.—The generated radio-frequency oscillations of the oscillator may be increased in power by feeding this current through circuits coupled to power amplifier tubes, which simply intensify the energy they receive without changing its character. It is indeed fortunate that the tube is adaptable to this particular usage, for, instead of building one large unwieldly and expensive amplifying tube to supply an antenna with a high watt output power, several smaller amplifier tubes, sometimes as many as six or more, all functioning alike, may be so connected together in a parallel arrangement that the antenna receives a large total power—the sum total of the watt output of the individual tubes. The advantage lies in the fact that the load is divided among the low-powered tubes; they are less expensive, more spares can be carried for replacement, and a smaller and more compact power-plant will supply the lower voltages necessary for operation.

Vacuum tubes may be connected in multiple arrangement, as outlined above, not only with amplifier circuits but also with modulator and oscillator circuits.

The actual manner in which tubes are connected in parallel is in itself a simple arrangement of connecting all the grids together and all the plates together. The filaments are energized from the same source of supply.

If these tubes are to be operated in parallel, a small radio-frequency choke coil or a resistance of suitable size (as, for example, 10 to 100 ohms) should be inserted in the grid circuit of each tube. The choke or resistance should occupy a position as close as possible to the grid terminal of the socket in order to prevent the setting up of parasitic oscillations (oscillations of ultra high-frequency) which may cause undesirable effects.

Continuous oscillations are currents surging back and forth in a circuit at high frequencies, producing a smooth-topped alternating current wave form. (See the lower curve in Fig. 93.) The amplitude strength, shown as the top or peak of each oscillation, is constant, and a line drawn through the peaks will be a straight line. The character of this energy is known as an *undamped, unmodulated,* or *continuous wave.* If impressed upon the circuits of a receiving set (not employing a regenerative detector) this energy would merely depress and hold the diaphragms of the telephone receiver in a rigid position as long as the undamped currents continued to flow. Signals could not be received.

In order to affect our sense of hearing the telephone diaphragms, must vibrate at a rate between the order of 20 and approximately 7000 times per second. To accomplish this the current which actuates the diaphragm movement must flow at a frequency in this *audible* range. It then becomes known as an *audio-frequency current.* The average human ear is most sensitive to sound vibrations having a frequency of between 500 and 1000 cycles per second. The relative effect of sound vibrations on the ear may be understood by contemplating the effect of the frequencies produced when musical instruments send forth the various tones which result in harmony.

For example, the shortest string in the piano scale vibrates at the highest frequency, a little more than 4000 times per second, middle *C* about 256, and the slowest vibration period is that of the longest string at the lower end of the gamut (range), or about 32. In general, tones higher than perhaps 7000 or 10,000 and lower than 20 vibrations per second do not register upon the ear.

To receive audio-frequency current changes, a distant transmitting station must radiate a complex wave for the purpose of projecting the voice frequencies through space. The audible electrical frequencies which produce the intelligible sounds are incapable of being radiated and must be carried along " on " or " by " the power of a radio-frequency carrier wave. The audio-frequencies appear only as a variation of amplitude strength of the radio-frequency energy. When an audio-frequency current is superimposed upon the oscillator circuit the oscillations will be made to vary in their amplitude strength. That is, the heights of the peaks or tops are increased or decreased and follow a variation similar to the modulator currents which caused this change. The audio-frequency variations appear as an envelop enclosing this oscillator carrier current, illustrated in Fig. 94.

The contour of a line drawn through these wave tops will conform exactly with the speech or musical vibrations directed toward microphone. A tube, known as the *modulator,* is connected through suitable

circuits between the microphone and the oscillator. It functions to communicate the necessary audible frequency variations that are to be impressed upon the oscillator. Energy of this character is known as a *modulated continuous wave.*

Modulator. — The method of superimposing an audio-frequency variation upon radio-frequency oscillations may be stated briefly as follows: The oscillator circuit generates radio (high) frequency oscillations, called a *carrier* current, because it serves as the medium upon which the audio-frequency changes are carried. The final form is the modulated carrier wave shown in Fig. 94 that is radiated away from a broadcast transmitter antenna through space to be picked up by a receiving set antenna. While the continuous radio-frequency oscillations persist at a constant frequency, variations in their amplitudes or peaks are taking place in accordance with the rate of change of the output currents of the modulator, because the circuits of the latter are coupled to the oscillator. The modulator tube is connected to the microphone circuits of the transmitter, and the sound waves of the voice or music impressed upon the microphone supply the modulator with a current varying at a similar audio-frequency. The modulator in turn imparts these audio current variations to the oscillator, modulating the energy of the continuous wave.

Just how this is accomplished is explained under the subject " Oscillator-Modulator " in Chapter XX. Exact and faithful reproduction of the original sound waves in this process is converted into electrical energy having a modulated continuous wave motion.

Speech Amplifier.—Power Amplifier.—The microphone circuit may supply its current to the modulator directly, or through the agency of one or more *speech amplifier* tubes. The function of the latter is to amplify and not in any way change the character or distort the wave form of the audio current, so that each tube will furnish increasing power until the modulator tube is supplied with the maximum input voltages necessary for its most efficient operation. This is a matter of great importance because the depth of modulation indicates the extent to which the current is made to vary and thus preserve effectively all of the overtones of the produced sound which give the reproduction its particular quality, or timbre. This requirement accounts for the employment of the audio *power amplifier* tube in any usage where the output of the tube must deliver, without distortion of any kind, a speech frequency current exactly in accordance with the sound waves impressed upon the diaphragm of the microphone. The purpose of employing a power tube is explained more fully in the latter part of this chapter.

Audio Oscillator Versus Modulating System Employing a 500-Cycle Alternator.—In a commercial telegraph transmitter the modulator tube circuits may be arranged to generate a low frequency alternating current of perhaps 500 cycles. The tube functioning in this manner is known as an *audio oscillator*. This 500-cycle energy superimposed upon the carrier wave of the oscillator modulates the c.w., so that when a wave motion of such character and frequency is received and detected, it will be heard as a musical tone in the telephone receivers. Adjustment for three different audio-frequencies is usually provided for the purpose of selecting the one giving a clear, well-defined and pleasing tone, which will cut through interference. This arrangement is very practical in that the same modulator tube may be used for voice or telegraphic transmission, and the motor-driven chopper, with its attendant equipment, can be eliminated in the modern installation. The chopper is the mechanical means used to interrupt the radio-frequency oscillations generated by an oscillator into groups producing an audible note in the telephone receiver of about 1000 cycles, the frequency most suited for the code used in sending telegraph messages. This interruption of oscillations by the chopper is called interrupted continuous wave transmission, abbreviated as I.C.W.

The recent method of obtaining I.C.W. telegraphy is to provide a 500-cycle alternating current generated by an alternator and step up the voltage of the a-c. through a transformer to a suitable value so that it may be introduced directly into the plate circuit of the main power-amplifier tubes. The 500-cycle energy acting on the plate is the equivalent of positive plate modulation without the use of an additional audio oscillator tube.

The normal positive plate potential or plate voltage of the tube is varied as the 500-cycle voltage either adds to or subtracts from the normal value. The carrier current generated by the oscillator is modulated in this manner and radiates a telegraph signal with a pleasing tone of constant characteristics when reproduced in the telephone receivers. This modulated energy offers the advantage of being capable of reception either by a simple detector circuit or by a regenerative detector, permitting the signal to be heterodyned, if desired.

The purpose of modulating the continuous wave with a 500-cycle audio-frequency current is to enable the observer at the receiving end to intercept and make intelligible the telegraphic signals radiated by a continuous wave transmitter when using a receiving circuit not equipped with regenerative amplification; that is, the receiver is not designed to generate oscillations within its own circuits.

A modulator tube may then provide I.C.W. telegraphy, and at the same time permit telephony to be used later if desired.

Detector.—The vacuum tubes in a receiving set function similarly to transmitter tubes when used for the same purpose, as for instance, oscillators and all amplifiers in general. The difference is mainly in their power and size. The receiving tubes are smaller, because they are designed to handle less power. The only exception is that a receiving set always employs one tube functioning as a detector. It is essentially a rectifier of continuous and damped waves. A detector tube is not required in the circuits of a transmitter.

The incoming waves will set up an alternating current in the tuned circuits connected to the detector, of such high *inaudible* frequency that no mechanical device is capable of following their rapid oscillations; for instance, the diaphragms of a telephone receiver will respond only to an average of the oscillations over a certain period. Since the alternations of the oscillations are as strong in their positive as in their negative directions in the tuned circuits, their average is obviously zero. It is necessary, therefore, to change this average by employing a detecting apparatus. The detector tube fulfils this function for it delivers an average change of output current at audio-frequency, exerting a pull on the telephone diaphragms causing them to vibrate. The magnetic flux in an electromagnet of a telephone receiver, or loudspeaker unit, will vary with the audio-frequency current changes in its windings. This change of magnetic pull imparts a mechanical movement to the metal diaphragm or armature, of a telephone head set, a horn, or a cone type loudspeaker, to set up the sound vibrations. The detector then separates the audio-frequency component of an incoming wave from the radio-frequency component or the *carrier current.*

Radio-frequency Amplifier.—Radio waves create a disturbance in a receiving antenna, causing only a very feeble current to flow in the oscillatory circuit, which is called the radio-frequency circuit. The receiving antenna circuit is tuned in consonance with the signal frequency, and therefore will respond with vigor only to the frequency of the carrier current of a transmitter whose signal is desired. It is the function of the tuned circuit to lower or suppress the strength of the current of all other frequencies to the point of inaudibility so that signals not desired are not received.

In order to increase the magnitude of the feeble current induced in the antenna system to a strength sufficiently high to operate the detector at maximum efficiency, it is usually necessary to place between the detector and the antenna circuits, one or more tubes operating as *radio-frequency amplifiers.* The radio-frequency tubes are generally arranged

in cascade, or straight amplification, indicating that one stage of radio amplification directly follows another. The output energy of each preceding stage feeds into the input side of each successive stage until the signal intensities are greatly multiplied. Also, if each stage is tuned, greater discrimination may be gained against signals not desired, giving greater selectivity and increased volume to the receiving set. After the signal passes through the detector tube it is then at audio-frequency, and usually is only strong enough at this point to make the signals heard when telephone receivers are used. The audio current is then carried through several stages of audio amplification to multiply or step-up its intensity for loudspeaker operation. In exactly the same way, but employing much greater power, the radio-frequency tubes of a transmitter are utilized to step-up the power successively from one stage to another until the maximum energy is obtained to set the antenna system into oscillation.

The amplifier tubes of either a receiver or transmitter may be used in other than cascade; for instance, in push-pull arrangement.

All amplifier tubes, when compared, operate in like manner fundamentally.

Audio-frequency Amplifier.—A tube functioning to amplify a signal that has passed through the detector circuit is called an *audio-frequency amplifier.* Audio amplifier tubes may be connected in either push-pull or cascade arrangement and after one type of tube has reached its limit of amplification, then a succeeding tube, or tubes, capable of handling additional power may be added, until the signal current reaches a value great enough to operate a loudspeaker with any desired volume. Again, we may have audio-amplifier tubes in a broadcast transmitter, in which case they are generally termed *speech amplifiers.* They merely increase the output power of the current of the microphone circuit to a suitable value before introducing it into the input circuit of the modulator tube, as we have previously mentioned.

Intermediate-frequency Amplifier.—The super-heterodyne receiving set employs one tube operating as an *oscillator* to generate a radio-frequency current. Its purpose, in brief, is to supply an oscillating current to a circuit which is already carrying the oscillations of the incoming signal. When two e.m.f.'s with slightly different frequencies act simultaneously in the same circuit, a resultant current called the *beat frequency* is produced; the two energies are said to *heterodyne* with each other. By tuning the oscillator circuit at the same time that the radio-frequency circuit is adjusted to receive a signal, the e.m.f.'s will swing in and out of unison or phase and produce a beat frequency. Their energies are either aiding periodically and working together to produce

a strong beat energy, or working against each other to weaken the beat current.

A good analogy for this phenomenon is the peculiar effect that is produced when two tuning forks of different but nearly equal pitches are sounded. Another note or pitch will be heard that is slightly different from either of the original pitches of the tuning forks. This is said to be a *beat effect* and the frequency of the beat note is the numerical value of the difference in the frequencies of the tuning forks. The beat note gradually dies away and then comes in stronger and stronger periodically as the vibrations of each fork fall alternately in and out of unison. Another but higher beat note may be produced, but will not be heard as a rule because of its unusually high pitch.

The constants of the oscillator circuit may be designed to produce a heterodyned beat note in the *intermediate*-frequency range in the order of about 40,000 cycles, which is above the audibility limit. The intermediate-frequency current is then amplified before the detector receives it to convert it in the usual way into an audio current.

A vacuum tube employed in this capacity is called an *intermediate-frequency amplifier* and usually not more than two intermediate stages are necessary to supply the audio detector with sufficient operating input voltage.

The principle of the super-heterodyne is based upon the following action. Suppose a very feeble signal current is impressed upon a loop antenna; this incoming energy is strengthened through one stage of radio-frequency amplification and is then heterodyned with the high-frequency alternating current generated by the oscillator, thus producing the beat note. The tube which functions to detect the beat frequency or intermediate is known as the *first detector*. The intermediate-frequency current is now passed from the first detector through two stages of amplification before the *audio detector* receives it to separate the audio signal wave from the high frequency current. The latter detector is known as the *second detector*. The high sensitivity of this system is due to the fact that the oscillator furnishes the driving power, and though the incoming wave may be weak, the heterodyning will produce a greatly intensified beat current. All of the intermediate-frequency tubes used in this receiver may be of one type, having the same specifications.

Summary.—In the foregoing paragraphs are outlined the relative distinctions between vacuum tubes (all fundamentally alike in design, having three electrodes, namely, grid, filament and plate) when used to function in either of the following capacities:

Oscillator, audio oscillator, radio-frequency oscillator.
Modulator.
Speech amplifier.
Audio amplifier.
Power amplifier tubes in general.
Intermediate amplifier tubes in general.
The detector.

Two-Element Tube.—Vacuum tubes having only two electrodes, namely, filament and plate, are employed to rectify or convert alternating current into direct current. Tubes having two elements, a cathode and an anode, containing a low-pressure mixture of gases, are employed as rectifiers and also are used extensively as a voltage regulating device.

A rectifier unit operating from an a-c. line will supply direct current at all of the operating voltages to radio receiving sets without the use of any "A," " B " or " C " batteries whatsoever.

All the functions listed above are responsible for the rapid advance and commercial practicability of broadcast and telegraph transmitters, the electrification of the radio receiver and the development of the superpower loudspeaker.

The importance of a basic knowledge of the vacuum tube function with its associated circuits cannot be overestimated. In this introduction we have given a few of its principal uses to show that while the same type of tube may be employed throughout the various circuits in a transmitter or receiver, the tube must be made to function with a characteristic which will satisfy the requirements of the particular circuit. We may best approach this subject with the electronic theory as applied to *thermionic tubes*, or tubes utilizing a heated cathode or filament. The characteristic performance is always shown by the visual method, in which graphs or curves indicate at a glance the variations of the output current for given changes of input voltages impressed upon the vacuum tube.

To carry out this thought we may here state that the complete operation of a transmitter or receiver is the result of a succession of voltage changes, which cause current changes in a circuit. The current changes in turn produce other voltage changes in the same circuit or in a neighboring circuit connected or coupled to it. (See Fig. 170.) This continuity of voltage and current variations is carried out through the vacuum tube, because a vacuum tube is a voltage-operated device. The vacuum tube is the heart of the operating system. As our purpose at the start is to acquaint the reader or student with the fundamentals,

it is deemed advisable to set forth this preliminary information regarding tube functions and terminology.

Considerable time should be devoted to obtaining the correct perspective of energy changes in radio circuits; this will materially aid one in applying the theory of vacuum tube operation in the circuit of which the tube is a part. The effects that a particular circuit will produce upon another circuit may thus be deduced easily and in this way a first or primary action may be compared to a reaction until the continuity of circuits and current changes is completed. Each operation is like a link in a chain contributing to the ultimate result desired.

It is always of advantage, when beginning the study of any science, to obtain a brief outline or perspective of its ramifications. That is the purpose of this introduction. It now remains for the reader or student to build up on the knowledge just outlined, through careful scrutiny and analysis of the more detailed facts set forth in this chapter.

FUNDAMENTAL THEORY

Electron Theory.—The electron theory was formulated by scientists to account for the manifestations of energy found everywhere. It enables us to understand the process whereby light, heat and electric energy are produced. What happens when electric current flows through a wire? How is it possible for an electric current to pass through a vacuum from one electrode to another? To answer these questions we must first explain the modern conception of the electrical nature of all matter; and how the electron is now revealed as the fundamental basis of all matter.

We must remember that electricity cannot be seen nor can the existence of an electron actually be demonstrated, but scientists in various ways have confirmed their belief in the electron theory by experimental evidence and we are called upon to accept their views as realities. In fact, the student is urged to accept this view at the start because the electron theory is especially important in relation to the use of vacuum tubes. If one can form a mental picture of an electron or electrons in motion and think of them as realities it will, doubtless, uncloud one of the hidden secrets connected with the subject of electricity.

All matter exists in three forms, in the solid, liquid, or gaseous state. It has been known for a long time that so-called solid matter is not solid but consists of smaller divisions of the material. These divisions are called *molecules*. They represent the smallest particles of matter into which a substance can be divided and still be recognized as part

of the original substance, thus retaining all of its physical and chemical properties. There are as many kinds of molecules as there are varieties of matter. The molecule is assumed to be subdivided into other constituent parts called *atoms*. An atom constitutes the smallest quantity of an element which is capable of existing. The atoms arrange themselves into groups to form molecules.

The whole structure of the universe is built upon units of matter known as elements; and these elements exist either singly or in combinations. There are more than ninety elements known to science, such as hydrogen, oxygen, iron, lead, helium, thorium, nitrogen, gold, aluminum, uranium, etc.

After the electron theory was developed, the atom was no longer assumed to be the last indivisible unit of matter that it once was thought to be. According to the present accepted theory, the atom has a nucleus around which revolve infinitesimal particles of electricity known as *electrons*, the whole mass being held in combination by electrical forces.

All electrons are alike; they have similar electrical characteristics.

The simplest arrangement of all atoms is that of hydrogen, because it has but a solitary electron revolving around the nucleus. Atoms of hydrogen, oxygen, lead, mercury and the other elements differ from one another only because they differ in the number and arrangement of their electrons around their nuclei.

The division of matter according to the atomic theory is a very complicated one. Hence, it might be well to illustrate the divisions by considering the atomic structure of water, since everybody is familiar with water and almost everyone knows that water is formed from two gases, hydrogen and oxygen. Water molecules may exist in (1) a solid state, ice; (2) a gaseous state, steam; and (3) a liquid state, water. Two atoms of hydrogen, H, in combination with one atom of oxygen, O, form one molecule of water; thus water may be expressed in chemical terms as H_2O. Obviously, neither hydrogen nor oxygen, which are both elements, have the properties of water. It may be assumed that water is an aggregation of electrons revolving at high velocities around their nuclei, the atoms being tied together by a powerful electrical attraction. The atoms form the elements, hydrogen and oxygen, which combine to form the molecules which we know to be water.

Since all matter is considered fundamentally alike, all of it consisting of electrons, we will discuss the behavior, rather than the nature, of *electronic* energy.

The Atom.—The electron is assumed to be the smallest known particle of matter, the final analysis of matter. It holds a definite negative

electrical charge and is in a perpetual state of motion, revolving around a positive electrical charge which, for convenience, we may call a nucleus. An atom has a nucleus, a compact mass of protons and electrons, but, for our purpose in discussing the electrical characteristics of vacuum tubes we may disregard the effect of the proton or the positive electrical charge. It merely provides the means for attracting and holding the revolving electrons in a definite order of arrangement.

When there is an even balance of values, of positive electricity and negative electricity, an atom is said to be a normal atom.

A normal atom consists of a positive electric charge, which we may call a nucleus, associated with a definite number of revolving electrons with the quantities of electricity so balanced that there is no indication of the normal atom possessing any electrical characteristics. For example, in materials such as wood, glass, cotton, mica, etc., their atoms are composed of exactly balanced quantities of negative electrons and a positive electric charge which firmly binds and holds the revolving electrons. The atoms are so perfectly neutralized that no external electrical charges are evident. Although such masses are seemingly inactive, yet within their atoms, due to the electrons, there exists a perpetual state of activity.

The construction of an atom of hydrogen, as stated previously, is assumed to be the simplest combination of a single electron held under the attraction of a positive nucleus. The atom of iron has a more complicated arrangement, consisting of twenty-six electrons, while the uranium atom, the most complicated of all the elements, has ninety-two revolving electrons. If we could explore the inside of an atom we would find that the whirling electrons arrange themselves into closed groups or orbits. Scientific investigators consider that there may be one or more electrons circling around the inner group; both groups, the inner and outer, vibrate around the same common center of attraction. It is reasonable to assume that the outer electrons are less firmly held within the influence of the nucleus in such an arrangement—an important fact which will be made use of in subsequent paragraphs explaining conduction current.

It is interesting to visualize the multitude of arrangements and numbers of electrons associated with positive nuclei which may possibly exist, and for each variation in grouping we have an atom of a different element. It is this difference which determines the atomic structure of the elements and makes possible the various substances and gases found on our earth. It should now be readily understood what is meant when it is said that all matter is fundamentally alike.

Here we find Nature's laws of *attraction for unlike electrical quantities*

and repulsion for like electrical quantities put into practice at the very basis of our conception of matter. *All electrons being alike and possessing similar negative electric charges will cause all electrons to repel one another with equal force*; but, the electrons are attracted and held within their revolving orbit by the opposite electrical attraction of the positive nucleus. This scheme whereby atoms are assumed to possess charges of electricity having opposite characteristics cannot be broken down; that is, atoms cannot literally be disrupted into their individual electrons by any process now known to man.

If it were possible in any way to tear atoms apart and change their normal arrangement or combinations by adding or subtracting electrons at will, scientists would then have the power to build up any kind of matter they might desire. For instance, they could start with an atom of hydrogen, and by adding more protons and electrons to the nucleus of the atom and more revolving electrons in an outer group, transmute or change the hydrogen atom into something higher in the atomic scale—for instance, to helium. Chemists would then have solved the mystery of our creation and would be able to accomplish their long cherished ambition of changing lead into gold.

We can observe the tearing-down process of the atom by the disintegration of radioactive elements like radium, which for many years continues to throw off electrons and penetrating rays of great power.

The purpose in relating these facts is to show that tremendous forces fasten normal atoms together and prevent them from being disrupted or broken down and reconstructed at the pleasure of man, but we can, in various ways, slightly overcome this force and strip an atom of one, or more, of its electrons. When an atom thus has been "stripped" of one, or more, of its electrons, it is called an *ion*, hence the process of this detaching or stripping electrons from an atom is called *ionization*. The stripping force which we will use is heat—the heat obtained from an electric current flowing through a metal wire—a filament, for example.

Before continuing this discussion, in regard to ionizing an atom, let us have a clearer understanding of what an electron is supposed to be, in order that we may later explain three important conditions relating to our radio circuits. Namely, what constitutes a flow of electric current through wires or other conductors; how electric energy may be communicated through a dielectric material (a dielectric is a nonconductor of electric current); and, lastly, the process whereby an electric current is made to flow through either a vacuum or gas atmosphere.

We already have a little light on the subject because we believe that all matter, solids, liquids and gases, are made up of electricity, to begin with, inherent in the substances. As far as our study of radio is

concerned, we are particularly interested in the tiny vibrating electrically charged electron.

An atom, as represented by the orbit in which electrons revolve around a nucleus, is often likened to a miniature solar system, similar to the movement of the planets about the sun. This does not appear to be a strictly accurate comparison in view of the fact that one or more electrons can be detached or stripped from an atom, and, after having been freed from its parent atom, the electron will leap or jump from atom to atom, or from one orbit to another, with tremendous speed, always seeking to attach itself to some atom which may be deficient in electrons—an ion, for instance. We cannot conceive that the planets as they whirl about actually dash or leap from one orbit to another, for such a condition would seemingly upset the whole solar system.

The Electron—"Carrier" of Electricity.—It is difficult for our minds to comprehend just how infinitely small an electron is, for it is estimated that a hydrogen atom is 1845 times as large as an electron. Even this comparison does not help us visualize the relative size of the electron. An electron is assumed to be $\frac{1}{13}$ millionth of an inch in diameter and $\frac{1}{16}$ billion billion billionth of an ounce in weight. These figures are not fantastic, but represent the calculations of scientists.

An electron possesses a definite negative electrical charge which cannot be disassociated from it. The electron is not assumed to be a small body of some material upon which a negative charge has been placed, but, rather, the negative electrical charge is considered as constituting the electron itself. Hence, all electrons are alike and exert a strong repulsion for one another because of the similarity of their electrical characteristics.

If electrons can be made to move from atom to atom in a material such as copper, or if they can be expelled or thrown off into space from a hot metal (an incandescent filament, for instance), *it means that a certain quantity of energy has been released* because certain forces had to be overcome in order to detach these electrons from their parent atoms. Hence, *any movement of electrons means a transfer of electric energy, and it is for this reason that electrons are called carriers of electricity.*

The Effect of Heat upon the Electron.—The electron is in perpetual motion, revolving around some positive attraction at an average velocity of 100 kilometers, approximately 62 miles per second, at a temperature of 0° Centigrade. The only time there is no electronic movement in a body is thought to be when the material or matter is held at a temperature of absolute zero. This, of course, is an extremely low temperature, and would not ordinarily concern us, except that we wish to emphasize the fact that the velocity of electrons increases when the temperature

of a body is raised. If electrons are speeded up when heat is applied to matter, they will naturally swing out in wider orbits when they gain very high velocities. Thus we see that heat provides energy in accelerating, or stirring up, electrons, and we can further conclude that the degree of heat will determine the extent of the orbit in which they will travel.

When a filament wire is heated by an electric current and the temperature is gradually raised, then, with each increase of temperature, the electrons gain in velocity, and, finally (when the filament begins to glow), the electrons will have acquired sufficient speed to carry them beyond the positive force of the atom to which they normally belong. They are then projected into the space surrounding the wire, and this action is called the *emission of the electrons.*

If we supply sufficient heat by means of an electric current, a metal such as mercury, can be vaporized. This principle is utilized in certain rectifying tubes used in large battery charging stations, or, by certain means, we can agitate electrons in a gas, such as hydrogen, or neon. Electrons shooting forth at high speeds in certain gas atmospheres may produce visible light rays which usually appear in a sort of purplish haze. Most of us have observed this phenomenon either when using certain types of electron tubes or in the new electric signs which have become quite popular, where a long glass tubing filled with neon gas is twisted to form letters, words and objects.

Other types of tubes are produced which emit rays. Some of the rays are visible, while others produced by X-ray tubes are invisible to the naked eye. Dr. W. D. Coolidge has perfected a filamentless cathode ray tube made into three sections, operating at 900,000 volts, for experimental purposes, and his research work in this direction doubtless will contribute additional information concerning the electron.

It is already known that while a beam of cathode rays possesses some of the properties of light it has one property which light does not possess—that of being deflected by a magnet. The discovery of this phenomenon will certainly lead to some practical usefulness. The high-frequency rays that are emitted by the tube seem to have a warming effect, noticeable to the observer, not from direct conduction through a heated atmosphere, but through induction, the rays apparently possessing a power of penetration. The high-speed electrons accountable for these high-frequency radiations are accelerated to 175,000 miles per second!

Since the development of the electron theory of the atom and the transfer of energy, the whole trend of modern physical thought has changed, for science now has a means of explaining different forms of

radiation. For example, scientists can explain why an incandescent filament sends out its rays and can analyze the wonderful spectral colors of the rainbow. Electric waves and light are the same phenomenon merely differing in frequency. Moreover, of more importance to us is the fact that even the freakish behavior of the short waves in radio transmission, known as skip-distance, and other peculiar day and night effects of radio waves, are now generally accepted as the evidence of terrific activity of the sun's rays in partly ionizing the atoms; that is, producing free electrons as well as ions in the upper atmospheric regions miles above the earth's surface.

Also to be considered are the following items: The charged condition in the dielectric medium surrounding an antenna system when in operation; the charge and discharge of a condenser; the action of the various tubes, vacuum tubes, tubes with a gas content, filamentless tubes; the flow of an electric current through conducting wires or through the atmosphere between two charged electrodes producing what is known as a spark discharge, etc. All of these manifestations of electrical activity are explained, as far as possible, according to the scientific view of the atomic nucleus—*the basis of which is the activity of the electron.*

The existence of an atom and of electrons all seems realistic, and the correctness of the theory is substantiated by leading scientists.

The student of to-day should realize that a fundamental knowledge of the electron theory is not only of great importance from the viewpoint of interest, but that it has come into our study of radio in such a way as to make it of immense practical value. Nearly as much time and attention should be given to the study of the electron as one would devote to the other fundamentals of electricity, such as magnetism, electromagnetism, electromagnetic induction, etc.

Definition of Normal Atom; Positive and Negative Charge; and Ionization.—A normal atom is one which has an even value of positive and negative electricity; in other words, the quantity of negative electrons exactly balances the positive charge. This has been previously explained.

If, by the application of heat, or by other means, one or more component electrons are detached or stripped from an atom, the atom will become unbalanced. The atom possessing less than its characteristic number of electrons is called a *positive ion.* The atom is then considered charged in the positive sense, not because any positive electrical charge has been added to it, but due to the deficiency of negative charge which disturbs its negative state, thus leaving a predominance of positive charge.

A *negative* charge exists when there are more electrons in an atom than the normal complement.

An *ion* is an atom which has either a positive or negative charge on it, and the process of adding to or subtracting electrons from an atom is called *ionization*. In our radio theory we make use of the positive state only, referring to it as a positive ion and, thinking of it only as such, we simply say ion; whereas, for the negative state we prefer that the negative condition be called the electron energy. Hence, we have two terms in common use, *ion* and *electron*. However, in our fundamental treatise on vacuum tubes and electrical current we may exclude the effect of the ions and consider the effect of the electrons alone.

It is advisable, at this point, to analyze the relation of the electron to current flow in order to have a better understanding of the outstanding difference between (1) conduction current, (2) displacement current, and (3) emission current (space current).

Electrons and Conduction Current.—It has already been explained that in certain materials, metals in particular, the atoms possess one or more electrons which can easily be detached under a slight influence. Evidently some electrons are held in combination, being strongly bound to the nucleus and perhaps forming an innermost group, while the one or two easily detachable electrons might be supposed to whirl around in an outer orbit and these naturally are less firmly held under the influence of the nucleus.

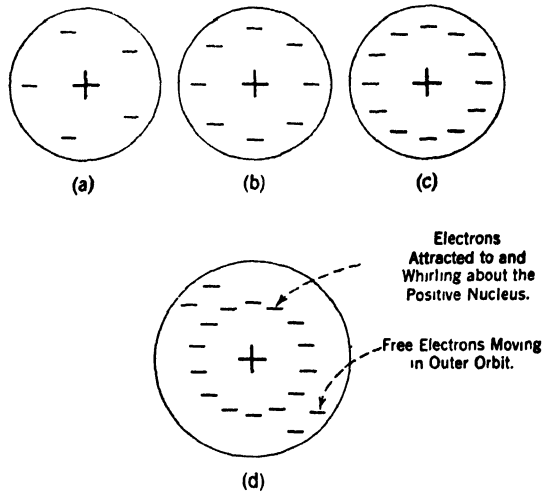

FIG. 142.—A graphical illustration of different atoms showing how electrons might be arranged in numerical groups. The electrons are rapidly whirling about and held in attraction by a positive electric charge.

These easily detachable electrons are very often designated as *loose* or *free* electrons. These terms would convey the impression that certain electrons are dashing about in a disorderly or promiscuous manner, yet electrons have a very definite place in the complicated system within the atom. An attempt is made to show graphically a nucleus and the revolving electrons in Fig. 142.

In any event, regardless of their designation, all metals, copper, and the like, have always available a great many *free* electrons which may be drawn away from their atoms under a slight attraction or electric force. The electromotive force (e.m.f.) is usually supplied in radio circuits from one of the four following sources: (1) a battery, due to its chemical reaction; (2) generators (generated electromotive force or dynamic energy); (3) the electromotive force produced by electromagnetic induction due to the changing magnetic fields in transformers; and (4) the discharge of a condenser, or electrostatic induction.

These facts are intended to show that when an electromotive force from any source is applied to a copper wire, or to other conducting materials, the easily detachable electrons in certain quantities are forced from their usual positions and begin *a progressive movement from atom to atom through the entire conducting circuit in the direction of the applied force.*

This movement or flow of electrons is called an *electron drift* and constitutes what we have always known as a flow of electrical current, generally called *conduction current.* Remember that electrons are not only carriers of negative electricity but are electric energy itself and that they already exist in the copper wire or in any other conducting materials.

Some materials are better conductors of electricity than others. This means merely that the materials which are the better conductors possess a greater supply of the more easily detachable electrons. Silver is a better conductor than copper; copper is better than iron, and so on. There is no movement of the molecules in a conductor, for the conductor simply passes electronic current and its physical shape and form are not altered. The molecules stay fixed, but electrons are passed along from one atom to another.

The direction of the electronic movement is from negative to positive, that is, through the conductor or closed circuit from the point, or place, at which a negative potential exists to the point or place of positive potential. This direction of electron flow bears out our previous statements that when electrons are detached from an atom, they dart or jump from atom to atom, into and out of the orbits of adjacent atoms, seeking to attach themselves to any atoms (ions) deficient in electrons. Hence, wherever a positive charge exists, it means that the atoms at that point are deficient in electrons and become unbalanced. On the contrary a negative potential point is one at which a superabundance of electrons exists. Electrons will naturally pass along from molecule to molecule, moving from a negative electrode toward a positive one in their effort to supply to atoms deficient in elec-

trons the equivalent number that will again make them normal atoms.

It will be seen by careful consideration of the foregoing statements that as long as there is a positive and negative potential existing between two points in a closed circuit, that is, a difference of potential exists, then so long will the free electrons constituting the conduction current travel in a sort of irregular course through the conducting material from one end of the circuit to the other, from negative to positive. In a very few words, the current will flow as long as an electromotive force (e.m.f.) is impressed upon a closed circuit.

The electromotive force can be discontinued in several ways, depending upon the source of the e.m.f., for example, by opening a switch, thus breaking the continuity of the conducting path; or if the e.m.f. is due to electromagnetic induction, then employ the loosest possible coupling between coils or change their angular relationship; or, by the stopping of an a-c. or d-c. generator; or by disconnecting the battery, etc. The free electrons then will no longer be forced through the circuit and they will again attach themselves and swing in the orbits of the atoms and restore them to their normal electrical equilibrium. Nature always seeks to adjust any abnormality.

The progressive movement of free electrons or electron drift, through a conductor, should not be confused with the rapid whirling motion of electrons around their nucleii. The electron drift moves at the relatively slow rate of a few millimeters per second.

The strength of a current flow, as indicated by the amount of needle deflection of a meter inserted in a circuit, is the visible evidence of electrons dashing from atom to atom, or the electron drift. When a larger current flows, it is evident that greater quantities of electrons are flowing; and vice versa. If a very strong current flows through small-gauge wire, then large quantities of electrons are crowded, causing friction which is manifested by the wire becoming hot.

Perhaps it is now clear to us that generators do not actually generate current at all, but the rapidly rotating armature coils as they cut through the magnetic lines of force produced by the field coils simply generate an electromotive force. A generator, either a-c. or d-c., is simply a source of electrical pressure. There is no current flow (electron drift) through a circuit, although the electrons always exist there, until the e.m.f. is impressed upon the circuit. That is, current flows only when the circuit, which may be connected across the brushes of the generator, is made complete or continuous, forming what is called a closed circuit. Analogous to this condition is a water pump. A water pump does not originate water but simply forces it to move.

The electron drift is due to the movement of the so-called free electrons and this action is not comparable to the process of ionization. Ionization is the process of stimulating an atom until perhaps one or two of its electrons, which under ordinary conditions are firmly bound to the atom, will be released and made available for the conduction of electric current. The stimulating force usually is the *heat* applied to a filament. Or a few electrons in a gas atom may be detached by the force or *impact* of other electrons bombarding the gas atom.

The two processes by which ionization is brought about are known as *thermionic* (meaning heat) and *impact* (due to collision). There are other means for producing electrons by ionization, but the present radio work will utilize only the ones mentioned. In Chapter XVI, covering "Rectifier Tubes," the principles involved in ionizing a gaseous atmosphere to make it electrically conductive are clearly explained.

Just as some metals have more or fewer available electrons for conduction so do various gases. Certain materials are almost devoid of easily detachable electrons for the conduction of electricity by means of the electrons. Such materials are known as non-conductors or dielectrics. These materials have other characteristics which are explained also by the behavior of the electrons which comprise their atoms. A brief discussion is given in the following paragraph only to show the chief points of difference between conduction current and displacement current.

Electrons and Displacement Current.—Again, the electron theory is used to explain what takes place in the dielectric of a condenser when it is charged (for example, by applying an electromotive force to the plates) and when it discharges (this time supplying an electromotive force to the circuit connected to the plates).

At this point, a brief review of the outstanding difference between conduction current in conductors and displacement current in dielectrics (non-conductors) will be valuable.

Conductors have a considerable supply of electrons which may easily be detached from their atoms by the application of an electromotive force or electrical pressure. Under the e.m.f. these electrons will move progressively through the circuit in the same direction as that of the applied force. The electronic movement constitutes the so-called current flow.

In a dielectric material, however, owing to the almost complete absence of detachable electrons, the application of an electromotive force across its surfaces does not produce a movement of electrons through the material, but the electrons, being quite firmly held in combination in the atoms, are merely pushed to one side undergoing a sort

of partial shifting from their usual positions. The electrons are displaced slightly in a certain direction when an e.m.f. is applied, but, when the applied e.m.f. is removed and the condenser or the dielectric is connected by a closed or continuous circuit, the displaced electrons shift back to resume their normal positions. *The energy which these displaced electrons possess when returning to their unstressed positions supplies an electromotive force to the closed circuit* This e.m.f. is effective in the same manner as any e.m.f. derived from other sources in setting up a flow of electrons (conduction current) through the wires and apparatus connected to the condenser.

The electrons in the dielectric of a condenser are displaced one way when the condenser is charged by an e.m.f., and they shift back in the opposite direction when the condenser discharges and releases its energy. Hence, the displacement of electrons within the dielectric is called *displacement current* because of this shifting back and forth of the electrons. Thus a condenser when charged with an alternating electromotive force has the effect of passing an alternating current.

Electrons and Emission Current—Space Current.—There are always a large number of electrons available for the conduction of current through a metal, a copper wire, or a tungsten filament, for example. When an electrical pressure (e.m.f.) is suitably applied, the electrons are guided in their movement through the circuit by the path furnished by the connecting wires, coils, or other elements forming the circuit. The moving electrons (conduction current) will flow through the entire circuit, through a copper wire or a filament wire, for instance, but they cannot become separated from the metal mass under ordinary conditions.

If, however, sufficient current is made to flow through the circuit to raise the temperature of the filament wire to a point where it will glow, or become incandescent, the component electrons will be accelerated, increasing the size of their whirling orbit as previously explained, and this will cause large quantities of the infinitesimal negative electrons to be expelled or emitted into the surrounding space. These negative electrons, having been released from their parent atoms and shot off into space by this process of ionization by heat, can be directed in their flight by the simple expedient of attracting them by placing a positively electrically charged body within their influence, that is, by placing the positive body at a predetermined distance from the hot filament. A body with a negative electric charge upon it would repel them.

In the vacuum tube the incandescent filament is the source of electron energy and the plate is the positively charged body which attracts the emitted electrons. A positive electric charge exists on the plate because the plate is attached to the positive electrode of a "B" bat-

tery, to the positive brush of a d-c. generator, or any other energizing source of supply.

In a vacuum tube the movement of electrons through the vacuous space from the hot filament, called the cathode, to the plate or anode, constitutes what is termed a flow of current. Hence, the electronic stream might then be called *space current* or *emission current,* for it is due to the electrons liberated by a hot body.

Thus we find that a flow of current is the movement of electrons, and may be brought under three classifications: (1) conduction current, (2) displacement current, and (3) emission or space current.

Much could be written about conductivity alone. But for our purpose, only conduction current which flows in the metal elements themselves, and emission current, which flows through the vacuous space, are used to explain the action within the vacuum tube.

THE VACUUM TUBE

Evidently the energy of the electrons and the paths they travel cause other forces to be generated.

After a review of the electron theory we are ready to resume our previous discussion on *ionization* and the building up of the fundamentals of the vacuum tube. The vacuum tube is known also as an electron tube, thermionic tube, vacuum valve, etc.

Two-Electrode Vacuum Tube.—Electrons emitted by a hot filament will move toward a positively charged plate. The plate is a relatively cold body compared to the hot filament. Because the plate is cold it cannot give off electrons, but it can attract electrons; hence, the two-electrode vacuum tube allows only *one-way conduction.* Current cannot flow both ways through the tube.

Dr. James A. Fleming invented the two-electrode vacuum tube. It consisted of a carbon filament and a metal plate suitably mounted and insulated from each other and placed within a glass bulb from which a considerable amount of the air was exhausted. A very high vacuum could not be secured in the early days, owing to the inefficient processes then in vogue for exhausting the air. Consequently, a large amount of air (gas molecules) remained within the bulb and affected its normal operation. A large positive charge applied to the plate to attract the emitted electrons of the filament would usually cause a blue haze to appear, due to the ionization of the air molecules, which altered the characteristic action of the tube. The degree of vacuum in the tube would change and some tubes became *soft* (having less vacuum) while others became *hard* (having a higher vacuum, with little or no gas present). This change in the state of the vacuum was dependent upon

whether the metal elements within the bulb gave off gases after the tube was placed in active use, or whether they acted to absorb gases remaining in the chamber after the evacuation process was completed at the time of manufacture.

The original two-electrode tube was used as a detector in the reception of radio-frequency oscillations, and it was extremely sensitive when operated at certain potentials because of its gas content. The gas, however, often made the operation unstable.

Dr. Fleming knew that current could pass through the tube in only one direction, but that by applying an alternating current to the elements of the tube, the direct current could be made to undergo a variation which would produce a strong signal in the telephone receivers connected in the output or plate circuit of the tube. The efficiency of the tube was tremendously improved by the addition of a third element, called a grid, and thereafter the two-electrode tube was not used as a detector. The work of Dr. Fleming has a permanent field, however, for the two-electrode vacuum tube, operating with a hot electrode (the filament) and a relatively cold electrode (the plate) is used to the present day as a rectifier tube.

The two-electrode tube conducts current through it only when the electron stream passes to the plate, and it can do this only when the plate is charged with a positive potential. Hence, when an alternating current flows to the tube, and is impressed across the elements of the tube as an alternating e.m.f., a direct current will flow only when the plate is positive, during one-half of the alternating current cycle. Electrons moving from filament to plate are potentially direct current. During the negative half-cycle the plate will be charged negatively and will repel the electron stream.

A two-electrode thermionic tube, because of its one-way conductivity, will function to deliver a unidirectional (direct) current in its output circuit when an alternating current is impressed upon its input circuits. The direct current will not be steady, but will fluctuate or pulsate, rising and falling in strength, but always flowing in the same direction. These pulsations may be smoothed out by the action of a network of choke coils and condensers, called a *filter system*, to provide a steady or constant d-c. flow when such energy is to be used to energize the plates of three electrode vacuum tubes. The plate of a vacuum tube may receive its d-c. positive potential from one of three sources: (1) a d-c. generator, (2) a battery of either dry cells or wet cells, or (3) from rectified alternating current.

Three-Electrode Vacuum Tube; or Triode Valve. — While Dr. Fleming's original two-electrode receiving tube would act to convert

high-frequency alternating current into unidirectional current varying in such a way as to produce a pulsating current in the coils of the telephone receivers, yet distant reception and volume were limited. Also, the general utility of the vacuum tube was limited.

Dr. Lee DeForest made one of the greatest contributions to the radio art when he added the grid to the two-electrode tube, making it a three-electrode device as used in radio to-day. He found that by placing a third element, a wire of grid-like construction, directly in the path of the electronic stream and then charging this grid with either a positive or a negative electric potential, the amount of electrons reaching the plate could be regulated.

It was thus found that by interposing the third electrode between the filament and plate the grid could be made to control the power in the plate circuit. A large quantity of electrons flowing from filament to a positively charged plate, in other words, a large plate current, could be made to vary in strength by exceedingly small electric charges on the grid.

This really amounts to a valve action because the local plate current of large value is supplied by a " B " battery, for instance, and it can be made to increase or decrease in value by applying alternate positive and negative electric charges to the grid. Thus it becomes possible to connect a recording device, or telephone receivers, in the plate circuit; and by the action of very weak incoming signal currents on the grid, the grid will be electrically charged. In turn it will cause a greatly magnified reproduction of the received signal by producing a variation in the strength of the plate current, this variation of plate current actuating the telephone receivers.

The Grid.—The received signal flows through the tuned circuits connected to the vacuum tube as an alternating current of high frequency, and at every half-cycle it reverses its direction. The grid being connected to this tuned circuit will receive this oscillating energy. Each oscillation varies alternately from a positive to a negative value, hence the grid will become charged alternately with a positive and negative potential. When the grid is positively charged it will attract electrons and increase the quantity flowing toward the plate. Actually all of the emitted electrons do not reach the plate, because a limited number strike the grid wire, being absorbed in the grid circuit. The only electrons which reach the plate are those that pass through or rather are pulled through the spaces between the grid wire under the positive electric force of the plate.

When the grid is positively charged during one half-cycle of an incoming signal the flow of electrons to the plate is increased. If, instead

of charging the grid positively, it is charged negatively, as during the other half-cycle of a signal oscillation, the negative charge on the grid will repel the negative electrons coming from the filament and thus reduce the supply or quantity actually reaching the plate.

Then a charged grid will allow electrons to reach the plate in varying quantities, depending upon whether the grid is positive, or negative, and the degree, or intensity, of these charges. In other words, the influence of the electrically charged grid on the electronic stream will regulate the quantity of electrons moving from filament to plate, or it controls the magnitude of the plate current, which is the same thing. Remember one important fact; the vacuous space between fila-

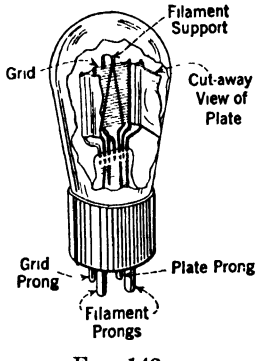

FIG. 143.

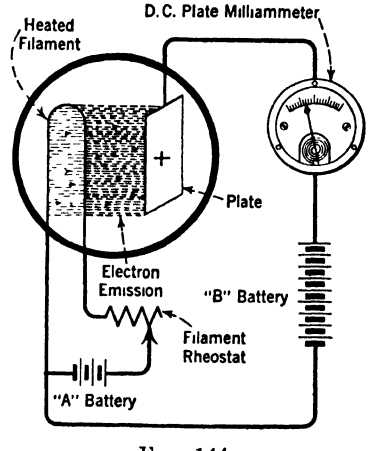

FIG. 144.

FIG. 143.—A cut-away view of a three-electrode vacuum tube.

FIG. 144.—The two-element vacuum tube.

ment and plate is not electrically conductive until it is made so by the emission and movement of electrons through it. Hence the grid might be said to control the conductivity of this path, for, when the grid is positive, it allows more electrons to flow through, which means that the plate current increases, whereas, on the other hand, while the grid is negative it obstructs electrons and fewer reach the plate, which reduces the plate current.

The sketch in Fig. 143 illustrates the general mechanical relationship of the grid, plate and filament; and it is to be noted particularly that the grid coil occupies a position between the filament wire and the plate. The fundamental action of the two-electrode tube is shown in Fig. 144, where the filament is heated by means of the "A" battery, the filament voltage controlled by the rheostat, and the plate

supplied with a constant positive charge by the "B" battery. The small arrows indicate the direction of electrons emitted by the filament, or cathode, toward the positive plate, or anode. The d-c. milliammeter will indicate the strength of the plate current, which is directly dependent upon the quantity of electrons reaching the plate and electrons passing through the external plate circuit.

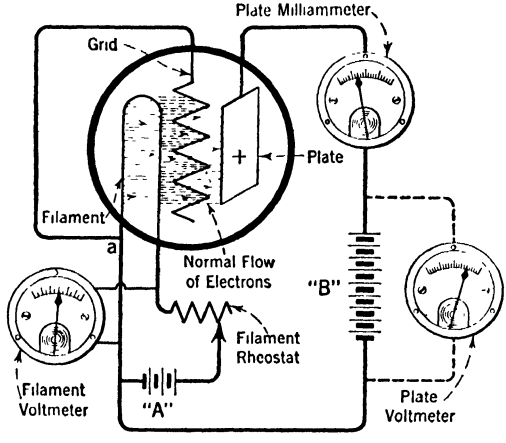

FIG. 145.—A fundamental three-element vacuum-tube circuit.

The fundamental three-electrode tube circuit is shown in Fig. 145. This shows the filament supplying the electron energy and the positive plate attracting a certain quantity of these electrons. Notice that the grid is located between the filament and plate and that it is connected back to the filament to allow the few electrons which may strike and attach themselves to the grid to flow immediately back to their source, the filament. The grid in our circuit is not electrically charged by any external means and, on the whole, it is neither assisting nor interfering with the electron stream flowing toward the plate. Actually the grid will have a certain negligible effect upon the electrons because of its presence, but, as shown in the diagram, it is not serving any purposeful controlling effect. Hence it will be considered that the potential of the grid at this instance is zero with regard to the filament. This is readily understood because the grid will assume the same potential as the filament at the point where it joins the filament, for the

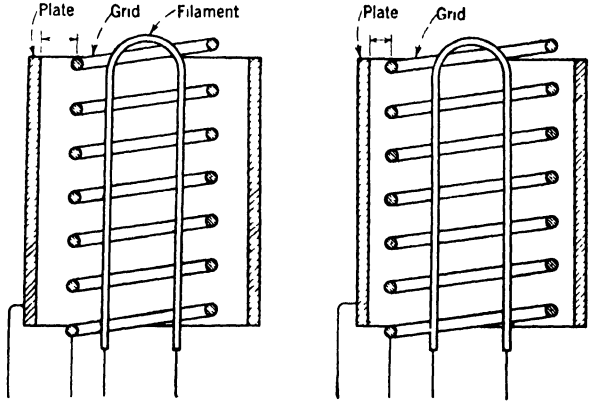

FIG. 146.—Sketches showing the relative position of the elements in a three-electrode vacuum tube.

external wire practically short-circuits the grid and filament in our experimental circuit.

The mounting of the elements in the tube is a very precise operation, for the relative spacing between them and the size and number of turns on the grid coil all affect the results obtained when the tube is supplied with the specified working voltages. A simplified presentation of a cross-sectional view of plate, grid and filament is given by Fig. 146, showing how the elements may be positioned to vary the distance between the grid and plate and also their respective distances from the filament.

The results obtained from the following simple experiment with a minimum amount of apparatus, as shown in Fig. 147, will explain convincingly the sensitiveness of the grid.

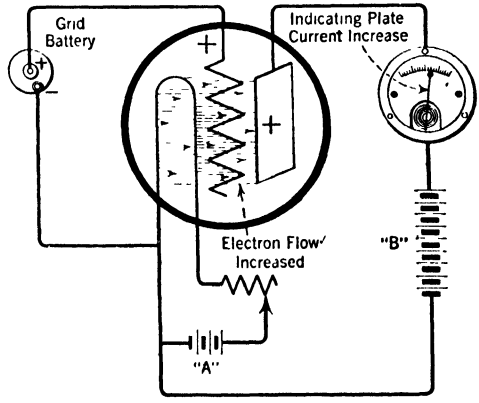

FIG. 147.—A positively charged grid causes an increase in plate current.

It is suggested that a small receiving tube be used for such table experiments, that the filament voltage be checked with a voltmeter at the value specified by the manufacturer, and the plate voltage at something less than its maximum value. In this case, there is no fixed negative bias being maintained on the grid to limit the flow of electrons. Consult the specification table and arrange the plate voltage to allow a plate current flow somewhere in the neighborhood of its normal value.

First insert one dry cell in series with the grid circuit as shown in Fig. 147. The grid is connected to the positive electrode of the cell; hence, the grid will be charged electrically positive by the amount depending upon the voltage of the cell. A new cell usually has an e.m.f. of about 1.5 volts. The grid, then, is charged 1.5 volts positive. The positive grid will now assist the positive plate and their combined forces will pull electrons over with much greater velocity, thus augmenting the quantity of electrons reaching the plate. A certain number of electrons will be attracted by the positive grid, and will flow (as conduction current) back to the filament through the dry cell and the connecting leads.

The electrons drawn in by the positive grid will be few in comparison

to the quantity that will reach the plate. This may be accounted for because the greater number of electrons attracted by the positive grid, when they reach this point, due to their gain in velocity, will be pulled through the openings or spaces between the turns in the grid wire by the much greater positive attractive force exerted by the plate beyond. The plate may have a potential of any value from about 22.5 volts upward, depending upon its type and power. The increase in the electron flow, due to the added attractive force of the positive grid, will be manifested by a larger reading obtained from the plate current meter than in the previous instance when the grid was assumed to be held at zero as shown in Fig. 145.

Let us now reverse the connections to the dry cell as shown in Fig. 148 and the grid will become negatively charged with 1.5 volts. The grid will now repel and turn back a certain quantity of electrons and, although the same plate voltage is maintained, there will be fewer electrons available for attraction by the plate. This reduction in the number of electrons reaching the plate will be evidenced by a decrease in the plate current reading. The combined electric attraction of grid and plate for electrons is lowered because the grid, being negative, now tends to counteract or neutralize, to a certain extent, the effectiveness of the attractive force of the positive plate.

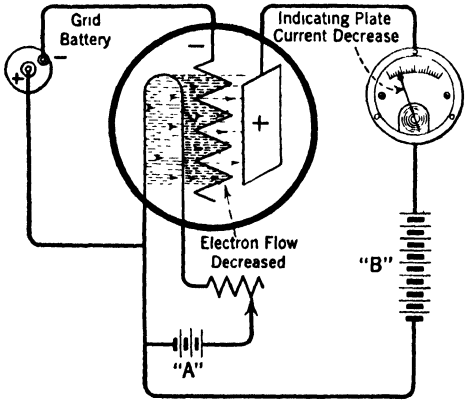

FIG. 148.—A negatively charged grid decreases the flow of plate current.

Now add dry cells, one at a time in series, in order to vary continuously the magnitude of the voltages on the grid; and at the same time tabulate the readings indicated by the milliammeter for every change. We will find that, as the increasing positive voltages are applied, the plate current will increase by certain amounts and when the grid is made increasingly negative by adding the dry cells, the plate current will decrease by certain amounts. What will be noticed, if the cells are assumed to be of equal strength, that is, 1.5 volts each, is that as they are successively added both in the negative direction and then in the positive direction, the plate current will not vary in a direct proportion. Sometimes the plate current will change by only a fraction for a 1.5-volt

grid change, but at other times the plate current will vary by large amounts for an equal 1.5-volt grid change.

The purpose of experiment (1-A given in a following section) is to bring out this characteristic variation in plate current which is not in accord with Ohm's Law. Current flowing through either a gas atmosphere, vacua, or through a flame, does not change in direct proportion to the voltage variations, assuming that the resistance is maintained constant. The peculiar current variation for grid voltage changes in a vacuum tube can best be studied by actually performing a simple experiment similar to the one suggested above and then plotting the valuations, that is, the plate current readings obtained for every change in grid potential, on a sheet of graph paper, and illustrating the action by means of a curve. The e.m.f. of the dry cells may be ascertained by using a d-c. voltmeter.

As higher negative charges are impressed upon the grid, electrons will be repelled in greater numbers and eventually a point will be reached where the grid becomes exceedingly negative and perhaps will repel and turn back all of the electrons emitted by the filament, so that none can be pulled through the grid meshes by the plate. If this happens, the vacuous space will not be a conductive path at all, no electronic current will flow, and the plate current meter reading will drop to zero. On the other hand, if we add more and more positive charge to the grid, the electronic flow will be correspondingly increased and the milliammeter will indicate this rise in plate current. The rise in plate current is also limited, for after a certain point the plate will draw all of the available electrons with the assistance of the positive grid. The plate current will then cease to increase further, regardless of any additional positive charge impressed on the grid. This limitation is characteristic of all vacuum tubes. In order to increase the plate current further (for an increasing positive grid) it would be necessary to raise the filament temperature to produce a higher emission rate. This we cannot do, because the filament is already operating at normal temperature and a very slight increase will shorten the filament life by many hours. The plate current, then, can fall to zero and rise to the limitations of the tube when exceedingly large negative and positive potentials are applied to the grid.

If, by some switching arrangement, the connections at the dry cell are caused to reverse at a rapid rate, a positive and then a negative charge having been applied to the grid (simulating an alternating e.m.f.), the grid potential variations will be shown by the changes in value of the plate current. If the reversals of grid voltage are not too rapid, the needle on the meter scale will rise and fall and deflect in

synchronism with the grid changes. What is especially to be observed is that the effect upon the plate current is greatly enlarged—the small grid voltage changes cause large variations in plate current. Naturally the needle deflection can be followed accurately with the eye only when the grid changes are applied slowly. As the rate or frequency of the alternating voltage changes is increased, a time will come when, due to inertia, the needle will not move back and forth over the scale, but will remain in a steady position. The plate current fluctuating in value at high frequencies can not be visualized by this simple means of the needle deflection over the scale. The plate current variations, slow or rapid, can be recorded, however, by an oscillograph, but this instrument is not always available for simple laboratory experiments.

A description of this experiment is given under the title Experiment 1-A, where all the controlling factors are evaluated and a characteristic curve is plotted to illustrate graphically the grid control features.

It is to be fully understood that this simple test of continuously reversing the polarity and the intensity of the grid charge by means of the dry cells was suggested merely to duplicate somewhat the conditions under which the tube is operated normally. All vacuum tubes operate upon the principle that alternating voltages are applied to the grid (at various frequencies and intensities, depending upon the particular current flowing in the grid circuit) and the plate current is made to fluctuate constantly and regularly between minimum and maximum values. The plate current cannot be called an alternating current, for it begins at some normal value and varies successively from lesser to greater values, always flowing in the same direction. The plate current, as previously stated, cannot fall below zero; hence it has only variations in positive value and is called a pulsating d-c.

The normal flow is that value of plate current which would flow steadily and unchanged through the tube under the conditions of a fixed plate potential, fixed filament temperature and a fixed grid potential, which means that the grid at the time is not being excited by alternating voltages applied to it. This steady flow of plate current is called the *d-c. component* and the increases and decreases caused by an alternating voltage impressed on the grid are called the *alternating component*, or *a-c. component*. The instantaneous variations (a-c. component) in the plate current will produce all of the effects of an alternating current, such as creating a changing magnetic field surrounding a coil or varying the potential at which a condenser is charged, or producing other effects. The rapid changes in plate current value, to cite an

example, will induce an alternating e.m.f. in a secondary coil when the latter is coupled to the plate coil.

Insofar as the fundamental action occurring within the vacuum tube is concerned, we already know, due to the strategic position the grid occupies between filament and plate, that whenever there is a change in the grid potential (or grid voltage), the plate current is affected and it also undergoes a corresponding change. Hence, when an alternating voltage is applied to the grid we obtain in the plate circuit a fluctuating or pulsating direct current which repeats the characteristics of the grid energy.

The purpose underlying the following paragraphs, then, is to show exactly the magnitude of the controlling effect of the grid upon the variation in plate current.

Under certain conditions the plate current may be made to vary with large amplitude changes for a given variation in the grid voltage, as will be shown. The plate variations, although large in amplitude, will be exactly similar in form and frequency to the alternating voltage impressed upon the grid. This is the fundamental idea of an amplifier action; the tube is used expressly for the purpose of obtaining a greatly magnified or amplified current in the plate circuit, which is faithfully repeating the wave form and frequency of comparatively weak alternating e.m.f.'s furnished to the grid. Under other conditions the plate current will vary in accordance with the grid voltage changes to give reproduction of the wave form of the grid changes, but in this case the plate current will vary in such a way as to give an average current change which is found suitable to actuate the receiving telephones. This is the fundamental idea of a detector action.

It may be advisable to state here that all vacuum tubes used in transmitters or receivers have only two fundamental actions: detector and amplifier action. The detector, of course, is employed only in a receiver. Any three-electrode tube when not employed as a detector must be operating fundamentally with an amplifier characteristic, that is, the wave form of the plate variations always repeats the wave form of grid energy which caused the plate changes.

Then a vacuum tube functioning in a transmitter circuit either as an oscillator, modulator, speech amplifier, power amplifier, or a tube functioning in a receiving circuit, either as a radio-frequency amplifier, audio amplifier, intermediate amplifier, oscillator, is *fundamentally* working in all cases as an amplifier. The tube action when operating with an amplifier characteristic will be explained and it will readily be seen that the external circuits associated with the tube govern the operation and determine whether the circuit as a whole functions as an

oscillator, modulator, or otherwise. The grid is responsible for these numerous uses of the vacuum tube.

In general, the only function which the grid is intended to perform is to act as a control member. Alternating electric charges applied to it from any source will vary the amount of plate current flow. Hence, the tube is essentially a voltage-operated device.

Grid Current.—For satisfactory performance, the grid should not be allowed to attract to itself an excessive number of electrons, particularly during a period when the grid might be charged to a high positive potential. It will be explained later that the electrons absorbed by the grid wire flow as a conduction current through the grid circuit outside of the tube and eventually return to their source, the filament. One of the most common causes of distortion in the tube itself is that resulting from the flow of excessive grid current. Then again, a very small grid current is utilized in the detector tube in order to give it a better detector characteristic. The amount of grid current must be controlled and this generally is accomplished in the case of a detector tube by the grid leak resistance used. In all other tube functions, that is, where the tube operates with an amplifier characteristic, the grid current is kept at a normal value by maintaining permanently a certain negative potential on the grid by means of either a "C" battery inserted in series with the grid, or by connecting the outside grid return lead (where it ordinarily joins the filament) to some location on a resistor which will provide the necessary drop in potential when current flows through the resistor.

There is still another method used in some commercial transmitters, where high-power tubes are employed. The actual negative grid voltage or grid bias, as it is called, is supplied to the grid from a d-c. generator.

A negative charge of predetermined value being maintained continuously on the grid during normal operation will prevent an excessive flow of conduction current in the grid. Also, keep in mind three facts:

(1) A very large grid current would tend to heat the grid wire and it might possibly emit electrons and cease to be the controlling member. In any event a hot grid is undesirable.

(2) With a high plate voltage to give the tube a certain operating characteristic and with no negative bias on the grid the plate current may run up to exceedingly high values, dissipating so much heat in the tube that the plate will be heated to cherry redness. The plate may then emit electrons or become ionized with resulting secondary emission —both undesirable conditions. For instance, a UX-171 power tube

will pass a normal plate current of about 20 milliamperes with a grid bias of 40.5 volts and a positive plate potential of 180 volts, but with no grid bias the plate current will increase to perhaps 100 milliamperes.

(3) Only a small grid current should be allowed to flow—a current sufficient only to hold the grid at the required negative potential. Any grid current beyond this amount does not serve any useful purpose. Any excess of grid current must be subtracted from the current that would normally flow in the plate circuit, since both grid and plate currents originate from the electrons emerging from the hot filament. If the grid takes excessive current, due to any cause, the grid is consuming energy and it will act as a load on the vacuum tube, thus lowering the output energy.

Only a general discussion of the desirability of controlling grid current can be given. The proper plate and grid bias voltages to be used for every type of tube and, as well, the proper filament voltages would require a lengthy tabulation. Complete characteristics and operating voltages are always specified in a sheet of instructions which accompany vacuum tubes in the cartons in which tubes are packed. A table of the characteristics and specifications of many tubes in general use is given in the Appendix.

Grid Current in Transmitting Tubes.—In the ordinary receiving tube it is not necessary to know the actual value of the grid current, or the actual potential value at which the grid is normally maintained, since this can be determined by the amount of bias voltage used and by watching the plate milliammeter for normal readings. The numerical value of the grid working voltage is of importance only when one wishes to be sure that the grid circuit is not acting as a load circuit by drawing excessive grid current. This information is required in the use of power tubes, so when calibrating an oscillator circuit in a transmitter a milliammeter is inserted in series with the grid return lead. A grid resistor is often placed in this circuit, and in this case the meter is in series with the grid resistor. Grid current flowing through the resistor of predetermined value will provide a voltage drop across it (calculated by Ohm's Law) which maintains a fixed negative voltage bias of the correct amount on the grid. The meter reads the direct current flowing in the grid circuit and by a simple calculation, knowing the d-c. current and the grid circuit resistance, the grid voltage may be estimated. To cite an example: a small transmitter tube of about 5 watts, rating with 350 volts plate potential, will normally draw approximately 40 milliamperes of direct current in the plate circuit, and the grid current meter will read in the neighborhood of 5 milliamperes when the tube is oscillating. The exact values of plate and grid currents in an

oscillator depend somewhat upon coupling and the frequency at which the circuit is adjusted.

Grid current is kept low in all amplifier tubes, or tubes acting in like manner, by employing one of the several biasing methods already mentioned.

Three Circuits of the Three-Electrode Tube.—From the facts previously mentioned we find that all three-electrode tubes operate with two distinct functions: a detector characteristic or an amplifier characteristic. Also, there are three circuits designated "*A*," "*B*," and "*C*," associated with the three electrodes of the tube, thus:

The Filament ("*A*" circuit).—The filament is the electron emitting electrode (cathode); the source of the electronic energy which makes the vacuous space conductive. The filament circuit includes in general a rheostat to regulate the terminal filament voltage and the battery (or other source) supplying the energy. Or, if the filament is heated with alternating current, the battery is replaced and the filament connected to the special low voltage secondary winding on the power transformer (rectifying transformer).

The Plate ("*B*" circuit).—The plate is the positively charged electrode (anode) which attracts the emitted electrons and serves to supply current (plate current) to operate any device connected in the circuit. This device may be an inductor, transformer, or resistor, and since power is being furnished by the plate current, the plate circuit is called the output circuit. Whatever device is connected in the plate circuit is called the *load* on the circuit. The plate circuit also includes either a battery, "B" battery, or a d-c. generator to supply the necessary current in order to energize the plate.

The Grid ("*C*" circuit).—The grid is the controlling element, which by changes in its electric potential regulates the magnitude of the electronic stream reaching the plate. The grid circuit is called the input circuit because the grid receives its voltage changes from the external grid circuit, one side of which is always connected to the grid and the other side to the filament. The grid circuit includes either tuning elements, such as inductances and condensers, or the secondary coils of transformers, or condensers which act to supply the input voltages to the grid. The grid circuit also will have whatever apparatus is required to supply the necessary grid negative bias.

The four prongs or pins on the base of the ordinary three-electrode

tube are connected to the internal elements by means of the fine wires running through the base and through the glass supporting rod as follows: two prongs provide connection for the filament wire (the two larger prongs in the UX type base), and one of the smaller prongs connects to the plate, while the remaining small prong connects to the grid.

The grid and plate electrodes are both suspended within the tube and become electrically charged bodies during the normal operation of the tube. The opposite ends of the grid and plate circuits (outside of the tube) are connected to some particular place on the filament circuit. These connections are called, respectively, the grid and plate return leads and are known as the low-voltage or low-potential side of the circuit.

If we trace out the continuity of each one of the three circuits we will find that both the grid and plate circuits embrace part of the filament and complete their path through the vacuous space in the tube. The continuity of the filament circuit is very easily followed and can be considered apart from the grid or plate circuits, or the vacuous space, because it is a simple conductive (metallic path) closed circuit furnishing current to heat the filament.

Heating of the Filament—(Cathode) and Relation of Grid to Filament.—There are several methods by which the filament power may be supplied. The ultimate purpose of any system is merely to supply sufficient current to heat the electron emitting electrode to the proper working temperature.

One method is by the use of direct current as furnished by a storage battery, or in some instances, dry cells. The remaining methods utilize alternating current for the power supply.

The first method is by the use of filaments connected in series, called a *series drive,* which obtains the necessary current from additional voltage-divider resistors connected in the output of the plate supply rectifier. Direct current is actually used on the filaments because the current is part of the output of the rectifier, whereas alternating current is supplied to the input of the rectifier.

Another method is to supply the filaments with d-c. obtained from a storage battery *floating* on a low voltage rectifier which trickle-charges the battery between operations.

Still another method (as suggested under the "*A*" circuit), is to secure the necessary filament current from a low-voltage secondary winding on a power transformer. The filament then receives an alternating current and the wire must be of sufficient size to retain the heat, to avoid cooling between cycles. A suitable midpoint connection

is in many instances made from the transformer winding or from a resistor connected in shunt with it, to prevent an a-c. hum.

Cathode-Heater Type Tube.—This type has recently become widely used in receiving circuits. Here the electron-emitting electrode (cathode) is not the filament wire, but is a small oxide-coated insulated cylinder which surrounds the filament. The filament is supplied with alternating current and radiates its heat to the cathode. The cathode gives off an adequate supply of electrons at fairly low temperature. This tube, the 227 or 327 type, is known as the radiation-heated equi-potential cathode type or more commonly called the *cathode-heater* type. Equi-potential (or uni-potential) means that all portions of the cathode metal surface are at the same potential with regard to the grid. In other words, when the grid is connected to the cathode both are uniformly at the same potential.

The electron flow (or current) is greater in this tube than in the ordinary 201-A type (filament type) due to a greater emission rate. For this reason, and also because of the equi-potential characteristics, the grid of the 227 type will intercept and absorb many more electrons than the grid in the 201-A. It is this flow of electrons that determines the conductivity of the vacuous space between the electrodes, and this is referred to in terms of resistance. This grid to cathode resistance affects the selectivity of the circuit. The negative grid bias required to limit this flow of electrons in order to increase the grid to cathode resistance will be greater in the 227 type than in the 201-A type. For instance, with 90 volts used on the plate, the grid bias should be about 6 volts or more, and with 135 volts on the plate the grid bias is close to 10.5 volts. These values can be compared with those for the 201-A by referring to the table of tube characteristics and specifications in the Appendix.

The uni-potential condition of the 227 type cannot prevail in the standard 226 type a-c. filament tube, or the 201-A type. The filaments in the 226 and 201-A tubes form the cathode, and because of this fact these filaments must be supplied with current which requires that an electromotive force be impressed across the filament terminals. In either the 226 or 201-A type of tube there is a difference of potential between the two ends of the filament wire, for when one end is positive the opposite end is negative, and between the ends, or throughout the heated wire, there is a voltage gradient, that is, no two locations on the wire are at exactly similar potentials with regard to the grid.

For instance, in a 201-A type there is a 5-volt drop along the filament. Suppose the grid return is connected to the negative terminal of the filament, the grid then is assumed to be at a similar potential

or zero potential to this end of the wire. Therefore, the opposite end will be 5 volts positive with respect to the grid. This is equivalent to saying that the grid has a 5-volt negative bias with regard to the positive end of the filament. The actual grid potential then is not zero, but in effectiveness it is at some slight negative potential, which value can be taken as an average for the whole filament. The average value for the 5-volt drop may be taken as 2.5 volts negative, and the grid will be biased by this amount. The bias, as a matter of fact, is little less than this amount, for the reason that the grid intercepts electrons that flow as grid conduction current which is not directly proportional to the grid voltage. The grid of the 201-A type attracts very few electrons, and draws very little current when worked at zero potential; that is, when it is connected to the negative filament terminal. This accounts for the fact that the 201-A can be operated at 67.5 volts plate potential as a radio-frequency amplifier without the use of a " C " biasing battery and when the plate e.m.f. is raised to 90 volts a negative bias of only about 4.5 volts is required.

Practical Grid Bias Example.—The grid bias may be obtained by connecting the grid return, not to the negative terminal post on the socket, but to the negative terminal of the " A " battery when a rheostat is inserted in series with the negative leg of the filament, and without the use of a " C " battery.

For this explanation we can use Fig. 145. The voltage drop across the rheostat or any resistor is equal to the current in amperes passing through the resistance multiplied by the value of the resistance in ohms. Suppose a 201-A tube is used in the circuit, its normal current is .25 ampere at a filament terminal e.m.f. of 5 volts. If a six-volt " A " battery supplies the power, then the rheostat must drop the 6 volts to 5 volts, or, in other words, with .25 ampere flowing through the resistor it provides a 1-volt drop. To do this, it must have 4 ohms of resistance, because, according to Ohm's Law, resistance equals voltage divided by the current. Assume that with the grid return lead connected, as shown at *a*, the grid is at zero potential with respect to the filament. Why this is so has already been explained.

Now if the rheostat occupied a position in the negative battery lead, then by moving the grid return wire from *a* to a point between the rheostat and the battery, we would obtain a one-volt negative bias on the grid. That is, the grid would be one-volt negative with respect to the filament and this would act to provide the normal amount of electronic current passing to the plate.

Any variation in the amount of resistance used will alter the voltage drop accordingly, but the fundamental idea remains for all types of

tubes and conditions, the difference being only in the magnitude of the values.

The Effect of Gas in the Vacuum Tube—The Vacuum.—Although a theoretically perfect vacuum is devoid of all matter, gases and solids, it will allow the passage of electrons through it. This can be accomplished, as before noted, by applying heat to a filament wire and placing a positively charged plate close enough to the space charge produced to cause a progressive movement of electrons through the space from one electrode (the filament) to the other (the plate).

A perfect vacuum is a medium through which electrons pass without interference. A complete vacuum is quite impossible to obtain even after elaborate pumping methods are employed to evacuate the chamber within the glass envelope. Small traces of gas are left in the tube and gases which have been locked up in the metal elements sometimes appear after the tube is placed in service. These occluded gases in the metal elements are reduced to an inconsiderable quantity by subjecting the elements to the effects of a high-frequency furnace during manufacture. The eddy currents produced due to inductive effect of the high-frequency energy result in liberating the gas molecules. Before the glass is sealed, a magnesium preparation is exploded in the chamber of certain tubes which acts as a *getter* for the absorption of any residual gases. This material forms on the inside of the glass envelope and appears as a silver deposit or discoloration.

Certain types of receiving tubes, 199, 201-A, and others, are so treated in order to obtain a high vacuum, and such tubes are known as *hard tubes*. The larger power tubes do not require this *getter* because they are less sensitive to small traces of gas.

Gas.—What happens when gas molecules lie in the path of electrons rushing with tremendous speed toward the plate is that they literally cause countless collisions. When the electrons strike the gas atoms one or perhaps two electrons in each of the gas atoms are knocked off, thus disrupting or breaking up their electrical balance, producing the freed electrons and positively charged ions. The new electrons thus liberated are pulled over to the plate and augment the main electron stream from the filament, thus increasing the total electronic current flow. This is known as *ionization by impact.*

The positive ions are attracted back toward the filament and form a sort of shroud, through which newly emitted electrons must break, producing therein other reactions that do not require explanation here.

However, if there is a considerable supply of gas molecules in the chamber and if the plate voltage is increased to a certain limit, the electrons will gain in velocity and bombard the molecules with more

force, and ionization will become greater. This, of course, means that a larger plate current will flow. If ionization becomes too great, due to a high positive plate charge, the tube will emit a blue glow in the region near the plate. This is to be expected, because the electrons attain their highest velocity at this point.

In order to give certain types of detector tubes a special characteristic action, a quantity of rare gas is injected in the tube at the time of manufacture. These tubes are of the 200 and 200-A type and are used solely as detectors. They are known as *soft* tubes. Due to their high conductivity, they are operated at lower plate voltages than the hard tubes and are never employed as amplifiers.

The hard tube is the one most generally used for detector and always as an amplifier, as it is less sensitive to minute variations and performs more consistently under the fixed circuit conditions of the modern receiver (one having few controls). Gas molecules in a hard tube interfere with its normal action.

Space Charge—Forces Acting on the Emitted Electrons—Point of Saturation.—Before continuing the explanations relating to subsequent experiments which deal respectively with operating a vacuum tube with a detector characteristic and an amplifier characteristic, it will clarify some of the actions if a general idea is gained of the various forces acting on the emitted electrons and of what determines the limitations of plate current or point of saturation.

Electrons in countless thousands fill the space surrounding a heated filament. This mass of the infinitely small negative particles actually constitutes a negative charge in the space they fill. This negative electrical condition in the space about the hot wire is called the *space charge.*

Certain materials are especially rich in electronic energy. Tungsten, certain oxides like calcium oxide, thorium, and so on, when heated, will emit large quantities of electrons. A tungsten wire is either coated with an oxide, or the wire is treated throughout with thorium. The thoriated filament is called an " XL " filament. Platinum wire is used in certain transmitter power tubes.

When the filament wire is cold, electrons are in a state of vibration, but it is not until current flows through and the temperature is raised that the electrons are agitated and gain in velocity capable of forcing them away from the influence of their parent atoms. When the wire is brought to an incandescent heat each electron emitted from an atom of the material decreases the negative potential of the wire by a certain amount. This leaves the atoms as positive ions; hence, they always bear a normal attraction for the emitted electrons. When the current

stops flowing and the wire cools, the electrons forming the space charge will be drawn back to the filament and combine with the atoms with which they were previously associated, again restoring their electrical balance.

The action of electrons boiling off or literally shooting off into space around the filament may be compared to the rise of vapor from the surface of water when it is heated. If additional heat is applied to the water, the surface will be greatly stimulated so that more vapor will issue forth. Accordingly, any change in temperature of the filament will vary the quantity of electrons emitted. Hence, it requires a certain amount of heat or thermal energy to rob a normal atom of one or perhaps two of its electrons. If the heating of the wire is carried beyond safe limits, the evaporation of electrons and disintegration of the wire will be so great as finally to exhaust the supply of electrons. This explains one of the reasons why some tubes in active use for only a short time develop a low emission and may not function, although the filament is heated to its usual degree of incandescence.

Reactivation.—The thoriated filament may sometimes be supplied with renewed electronic energy by a process called *reactivation*. The process is carried out simply by passing more than the normal current through the filament. Since normal evaporation of the electrons takes place on the surface the increased temperature of the wire has the effect of boiling out electrons from the innermost recesses in the core of the wire, forcing electrons to the surface which could not be freed under the ordinary normal heat. The current is increased about 15 per cent above the specified value and held at this point for about 30 minutes with the plate circuit open. If after this period the electronic emission is still low, no further attempt should be made to revitalize the tube and it should be discarded. Oxide-coated filaments will not respond to this treatment of reactivation.

It is now apparent that *rate of emission* depends upon the material of which the filament is made, the temperature at which it is heated, and the size of the wire. Furthermore, the heated filament (that is, its positive ions) exerts an attractive force for the liberated electrons constituting the negative space charge.

Now let us analyze why the electrons reach out so far from their source.

All electrons have exactly similar negative characteristics and have an enormous repulsion for one another. After the first electrons begin to emerge from the surface of the hot filament they are actually pushed outward and assisted in their flight farther away from their source by other newly emitted ones projected from the point of origin. Some

electrons are thus propelled greater distances from the wire than others, because of this action, while some do not gain in velocity, and as their speed is checked they remain close enough to the wire to be still under the influence of the positive ions in the wire. The latter electrons will be pulled back to the filament. Certain electrons, according to their distance from the wire, will be under the *repelling effect* of electrons behind and ahead of them. The velocity of the electrons and the repulsion due to their like negative charges, cause them to continue in motion.

The space charge surrounding the filament constitutes a negative electric field of definite quantity or proportions, called its *density*.

Action of the Plate.—The plate becomes a positively charged body when an e.m.f. is applied to it. A positive charge on a body means that it is deficient or lacking in electrons by a certain amount. The plate can be electrically charged to either a high or a low potential by changing the positive voltage applied to it from either a "B" battery or other source.

On the other hand, a negative charge is a charge with an abundance or excessive amount of electrons. The negative quantity can also be varied. In this case the space charge is the negative electricity.

A positive body being short of electrons always seeks and attracts to itself the required number of electrons (a definite amount of negative electricity) in an effort to bring about a state of electrical balance. In other words, a plate with a certain positive potential applied to it can attract toward itself only a given number of electrons, regardless of the quantity that might be available for attraction. This action accounts for the limitation of the plate current, for, no matter how high the filament heat is increased beyond the positive plate requirements, the plate current will not increase further.

Only sufficient electrons can be attracted by the plate to neutralize the positive effect of the plate (attempting always to restore its atoms to normal). The positive plate charge, as just stated, can be controlled by the amount of "B" battery voltage used. This limitation of the plate current can be noted by the milliammeter in the plate circuit. The reading will increase steadily, although not directly proportional, with each increase in filament current until the upper plate current limitation or *saturation point* is reached. It will then be noted that for any additional filament current or raising of filament heat the meter will not indicate a further deflection. The saturation point, or the upper limit of a characteristic curve where the curve flattens out, shows this action.

Action of the Plate and Filament.—The purpose of the characteristic curves is to show at a glance the rate of change or the proportional

increase in the plate current for either of two conditions: (1) Filament voltage varied while plate voltage remains constant; (2) plate voltage varied while the filament voltage remains constant.

The procedure and practical points for deriving the curve and conclusions are:

(1) *Filament Voltage Versus Plate Current.*—In brief the following experiment is performed by maintaining the plate voltage at a constant (fixed) value and progressively increasing the filament current, beginning at zero value. The results obtained are shown in the filament voltage-plate current curves illustrated in Fig. 149.

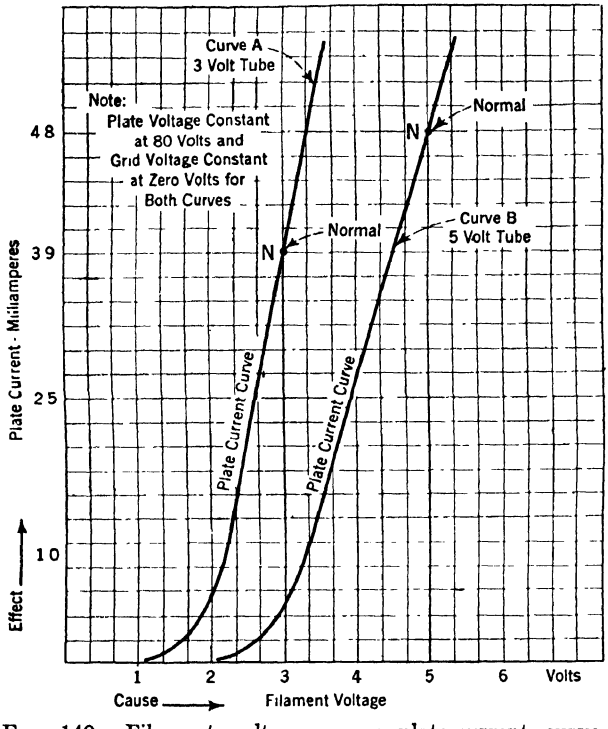

FIG. 149.—Filament voltage versus plate-current curve. The characteristic rise of plate current for increases in filament e.m.f. to a normal value is clearly shown.

The circuit shown in Fig. 145 can be used to perform the simple experiment where the grid is connected to the filament terminal post by a jumper wire to make the grid practically ineffective at zero voltage. The fixed plate voltage value is read on the plate voltmeter, shown in the diagram connected across the "B" battery by the dotted line. The variations in filament voltage are read on the filament voltmeter connected between the + and − input terminal on the socket.

With every change in filament voltage from zero to some value only a very little above the maximum specified for the tube used, the plate current and filament voltage for each setting is written down and after running through a complete set of values the results are plotted on graph paper, as shown in Fig. 149. We have illustrated by means of

the two characteristic curves on the same graph paper the rise in plate current for two different type tubes, one a 3-volt tube (curve *A*) and the other a 5-volt tube (curve *B*).

Observe in each case that the plate voltage remains constant while the filament voltage is varied by means of the filament rheostat. The filament voltage changes are plotted on the horizontal axis or line (abscissa), and the plate current on the vertical line (ordinate). Curve *A* shows the gradual increase in the plate current at the first heating of the filament and the sudden increases while the filament voltage is further increased. With the filament at three volts, the plate draws 3.9 m.a. (milliamperes). The curve does not rise much beyond this point because no more than 3 volts is applied, this being the normal value at which the tube should be worked. Any further heating of the wire would tend to destroy it.

The second curve *B* shows the characteristic rise of the plate current for the tube used in this experiment. Here the filament e.m.f. can be raised to 5 volts, its normal rating, and the plate current will increase to 4.8 m.a. The plate voltage on either tube could be raised to about 90 volts, and for this increase of 10 volts the greater positive attraction of the plate would result in more current flow. It is inadvisable to increase the plate current flow, for reasons already stated, to a point where the plate might begin to heat. It will be seen later how it is possible to apply a high positive voltage to the plate and yet limit the plate current to safe values by maintaining a certain negative voltage bias on the grid.

The elementary grid action has been heretofore explained. In this experiment the grid is not brought into play, for the purpose is only to explain the fundamental action and requirements of both filament and plate.

It should be noted in particular that the two tubes have the same characteristic rise in plate current; that is, the curves of both are similar in shape or form, the only difference lying in the magnitude of the respective values. *This variation in plate current is characteristic of all vacuum tubes.*

(2) *Plate Voltage Versus Plate Current Curve.* By maintaining the filament current at a constant value and progressively increasing the plate voltage, beginning at a zero value, a point will be found wherein the plate current will cease to increase. It is said that the saturation point is reached when this condition of no further increase prevails.

Employing the circuit shown in Fig. 145, the filament voltage is set and maintained at normal value throughout the experiment. The plate voltage is varied by means of taps on the "B" battery or a potentiom-

eter may be connected across the whole " B " battery and by connecting the plate to the movable arm any desired voltage may be obtained. The use of a potentiometer or voltage divider is explained elsewhere. In any event, regardless of the method used, the purpose is to vary the plate potential, starting at zero, and for each change both the plate voltage and the plate current are noted on the respective meters. This gives a comparison of the effectiveness of the positive plate in varying the plate current. The readings are tabulated as before and plotted on graph paper as shown in Fig. 150. Although only three plate current values are given, other values may be found by experiment. The three values are sufficient to convey the idea of how the full curve is derived.

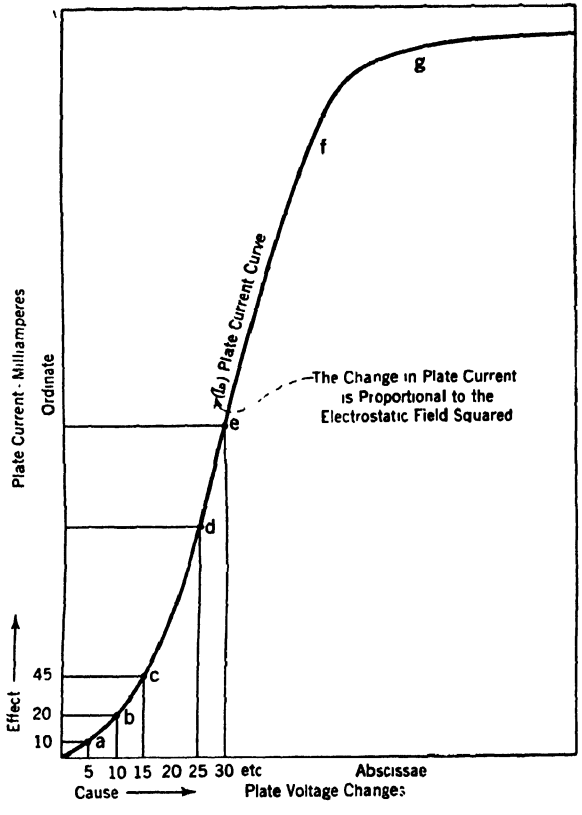

FIG. 150.—Plate-current variations plotted against changing plate-voltage values.

The curve is plotted as follows: If the plate voltage is raised successively in equal amounts of 5 volts, 5, 10, 15, and so on, the plate current flowing at these values will be respectively 0.10, 0.30, 0.45 m.a. and so on. Project vertical lines (ordinates) upward from the divisional points along the abscissa at 5, 10, 15, and so on. Then draw horizontal lines from the current locations on the ordinate axis and place dots where the lines intersect, as at *a*, *b*, and *c*. Do this for other values taken, as at points *d* and *e*, progressively increasing the plate voltage to some value wherein it cannot increase the plate current because it is attracting *all* of the electrons emitted. Now draw a line through all of the intersecting points and the curve,

as shown, will be the visual or graphic indication of the overall action.

Note that, although we may increase the plate voltage in equal steps of 5-volt changes the plate current does not rise in a directly proportional manner, for 0.10, 0.30, and 0.45 are not increases in equal amounts. The plate current will increase very slowly at first; but at some critical plate voltage, as at *c*, the current will begin to increase to a marked degree. For instance, the plate voltage is raised 5 volts, as shown between 25 and 30 volts, and the plate current for this change increases in value from *d* to *e*, whereas on a 5-volt plate change as between 10 and 15 volts the plate current moves up only from *b* to *c*. After a certain plate potential is applied giving a plate current indication as shown at *f*, the plate operation is now approaching the saturation point. When all of the emitted electrons are attracted by the high positive potential on the plate, that is, when the total space charge has been neutralized by the positive plate, no further deflection of the plate meter will be noted. This condition is shown at *g*. Additional increases in positive plate voltage cannot cause a further current increase and the curve flattens out.

Again, *all vacuum tubes have this characteristic variation in plate current for plate potential changes.* Because the plate current does not vary in direct proportion with plate voltage the curve derived is *not* a straight line. This characteristic curve is called a *logarithmic curve* and, by certain mathematical calculations, it would be found that the plate variations are proportional to the square of the plate voltage. Since the plate is an electrically charged body and creates around itself an electric or electrostatic field, as all charged bodies do, the plate current is proportional to the electrostatic field squared.

This ratio between the cause and the effect may be expressed as follows:

$$I_p \alpha E_p^2$$

where

I_p represents plate current;

E_p represents plate voltage;

and

α means is proportional to, or varies as.

In running a practical curve as described, the starting of the curve from zero and also the falling off of the curve at *f*, approaching the saturation point *g*, will be much more gradual than depicted by our illustrated logarithmic curve.

Logarithmic Curve Versus Straight-Line Variation.—The logarithmic curve is one which illustrates the rate of increase or decrease of a

quantity due to a definite cause where the quantity varies in such a way that the curve has no definite minimum point showing the decrease of the quantity and no definite maximum point indicating the increase in the quantity. The curve suggests or forms a long comparatively straight and steep portion at either end of which it bends and tapers off. The bends are known respectively as the *lower knee* and the *upper knee* of the curve, and the straight part as the *linear portion.*

The characteristic curve of the tube shows that the plate current does not vary in direct proportion to the applied voltage, and is not in accord with Ohm's Law for direct current. This current and voltage relation was stated previously in the discussions relating to the passage of an electric current through a vacuum, but now it is proved conclusively.

Furthermore, observe that in (1) and (2) different *causes* were applied whereby the plate current was made to vary and the *effect* (the plate current) was found to be similar in each case. The same shape or characteristic curve resulted, the difference being only in the respective magnitude of the values.

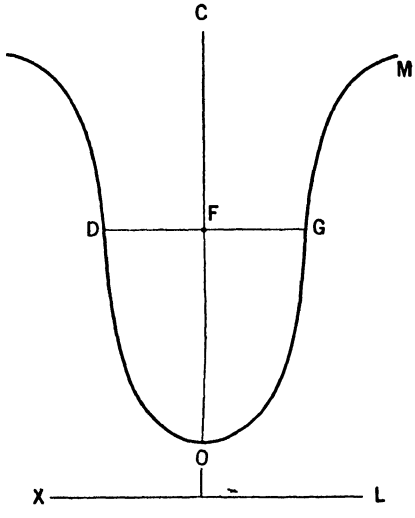

FIG. 151.—This drawing is the basis for the mathematical computation of vacuum tube characteristic curves.

Much use of this characteristic plate current variation is made in explaining different functions of the tube, particularly its action when functioning either as a detector or an amplifier, when the grid is brought into play.

For the student who wishes to obtain a more complete explanation of the origination of the *square* law relating to the vacuum tube curve a figure called a *parabola* is shown in Fig. 151; and it can be seen that the right half of the curve *OGM* is similar in shape to the tube characteristic curve.

It is clear that we have simply drawn to the left of ordinate *OC* a characteristic curve similar to one plotted in the experiment. A parabola is a geometric curve, every point of which is equally distant from the directrix *XL* and the focus *F*. The focus lies in axis *CO* drawn from *DG*, which is a straight line drawn across the vertex or head of the figure, at right angles to the axis of the curve so as to bisect the figure in two equal parts; that is, half is an ordinate. The length *OF* is the

abscissa and *FG* is the ordinate, and from mathematical computation it is given that the abscissas of a parabola are as the squares of their ordinates.

Suppose that the current flowing through a vacuum would vary according to Ohm's Law for direct current, or $I = \frac{E}{R}$, then the characteristic curve shown in Fig. 150 would appear as a straight line. If this were true, then for equal steps of plate changes at 5 volts the current would increase in direct ratio. Assuming a 2-m.a. current increase for each 5-volt plate change, a line drawn through and connecting all of the intersecting points *a*, *b*, *c*, and so one, would not follow any curve at all, but would be a straight line, as *OD* in Fig. 152.

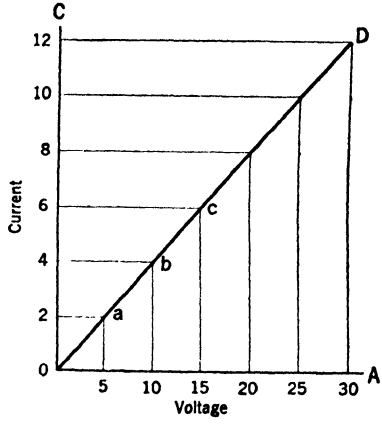

FIG. 152.—A graph showing straight-line variation. Current increase is directly proportional to voltage increase.

A straight line denotes what is termed a *linear characteristic*, and a curve, such as the logarithmic curve, a *non-linear characteristic*.

A vacuum tube then does not have exactly a straight-line variation throughout, but it does have quite a long sloping portion which is linear.

It is seen now that we can shift the normal plate current flow by the simple means of varying the plate voltage. The filament current or voltage should never be changed after once set at the correct value. Also, the plate current flowing for any particular plate voltage can be regulated to work the tube at some location on its curve either in the neighborhood of the lower knee or further up along the linear portion, or even at the upper knee. The tube is not usually worked at the upper knee because the plate current at this point reaches a very large value far above ordinary requirements.

It will be shown later that a tube functioning as a detector is operated in the region of the lower knee, and that other tubes which function fundamentally as amplifiers are operated somewhere along the steep or linear portion of the curve.

Summary of Foregoing Facts about Plate and Filament.—The results of the foregoing experiments show that the number of electrons passing through the space between filament and plate depends both upon the rate at which they are emitted by the filament and the rate

at which they are drawn in by the plate. Hence the following two conditions must be met in any vacuum tube:

(1) The filament must supply all of the electrons that the plate will absorb, for all plate voltages up to the maximum as specified for the particular tube in question. The space charge should contain a surplus of electrons, over and above the actual number necessary to neutralize the positive effect of the plate at any of its working voltages. This allows for a slight decrease in filament temperature, due to a slight change in filament current, without materially reducing the electronic current flowing to the plate. If the plate, at a certain voltage (within working range) is unable to obtain the necessary electrons, due to a possible reduction of filament current from some unexpected cause, the plate current will fluctuate or fall below normal. A plate current meter will show this decrease if the filament voltage is reduced.

(2) The plate voltage (stating the conditions in (1) but in a different way) should not be raised to a value greater than maximum, for if it is, a point will be reached where the plate in its effort to neutralize its positive charge may attract all of the space charge electrons, and any further increase in plate voltage cannot result in any greater absorption of electrons.

The upper limitation, or maximum value of the plate current under any conditions imposed upon the tube have been outlined.

EXPERIMENT NO. 1-A

Grid Voltage versus Plate-current Characteristic Curve.—The following experiment demonstrates the Effectiveness of the Grid and its Power in Exercising Control of Plate Current.

The general explanations and theory governing the control action of the grid have already been submitted, but it is doubtful whether one can really understand how the plate current is affected for any change in potential that might be applied to the grid without running the simple test explained here and then plotting the values on graph paper in order to visualize the action.

From the knowledge gained in this experiment the fundamental detector and amplifier actions can be understood easily.

The student is advised to adopt a form similar to the one used herewith whenever making tests or experiments. This is an important requirement because students must reason for themselves and endeavor to account for the results obtained, as shown by the measuring instruments, checking these results against the theoretical explanations.

EXPERIMENT NO. 1-A

Title.

Grid Voltage versus Plate Current Characteristic Curve or $E_g - I_p$ curve.

Purpose.

To show the effectiveness of the grid and its power in exercising control of the plate current, and the ratio of the variation in plate current for a given grid voltage change peculiar to vacuum tubes.

Apparatus. See Fig. 153.

1 Vacuum tube
1 Filament rheostat R
1 " B " battery bank
1 " A " battery

A number of dry cells or " C " battery. The number required depends upon whether one desires to draw a complete curve showing the upper limitation or saturation point.

1 Potentiometer or voltage divider P connected as shown. About 500 ohms.

1 Plate current d-c. meter marked MA
1 Grid voltmeter d-c. marked V_1
1 Plate voltmeter d-c. marked V_2
1 Filament voltmeter d-c. marked V_3

Diagram.—To be drawn by student.

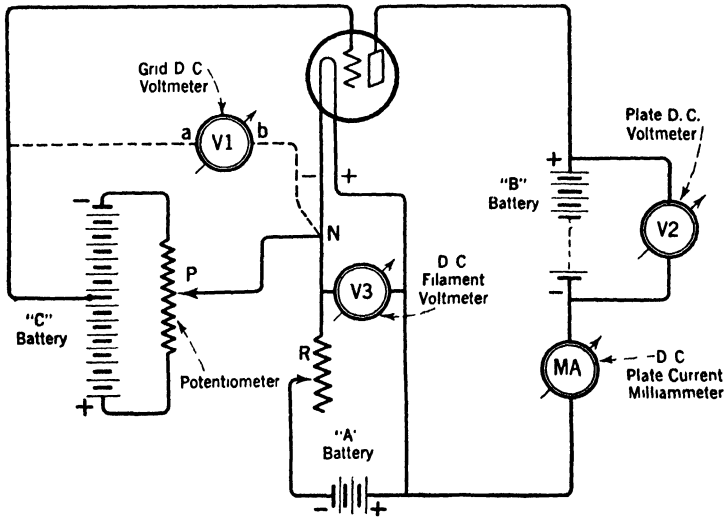

FIG. 153.—This is a typical circuit used to obtain the characteristic curve of a vacuum tube. The circuit permits positive and negative grid voltages of any desired value to be applied to the grid in order to test its effectiveness in controlling plate current.

The diagram shows that a simple circuit is formed with all three of the tube elements functioning. Assume that for the particular tube used we adjust the "B" battery voltage at 90 volts. The plate throughout the test will be constantly charged to an electric potential of 90 volts. Adjust the filament rheostat until the filament voltmeter reads 5 volts. The filament temperature will also remain constant.

The variable factor, the one which will cause changes in plate current, is the grid electric charge.

The circuit, as illustrated, satisfies all of the conditions for plate current flow, and needs no further explanation, other than to suggest observing how the grid voltmeter is connected to read the grid potential.

Procedure.

When the sliding contact, or arm P, is exactly centered the grid voltmeter will read zero. If the arm is moved upward, positive voltages will be applied to the grid; if moved downward, negative voltages will be impressed on the grid.

This method permits relative grid voltage and plate current readings to be taken directly from the equipment in a short time and the tabulation of the values as listed in a following paragraph.

It does not require a lengthy explanation to instruct the person performing the test except to avoid excess filament e.m.f. and plate e.m.f. The grid voltage can be increased by moving arm P in either a positive or a negative direction.

It is suggested that steps of about 2-volt changes on the grid be run uniformly throughout in order easily to plot the results on the graph paper. Note that the grid voltmeter is shown connected in dotted lines. If the voltmeter does not have a zero center scale, so that it can be read in either direction (for negative or positive values), it will be necessary to reverse the leads at its terminals, marked a and b, as found necessary.

Results.

Tabulate your measurements as suggested on the next page, that is, a plate current reading for every change in grid voltage. First, apply sufficient grid negative voltage to cause the plate current to drop to zero. The amount of positive grid voltage to be applied later is left to the discretion of the person performing the test. This is mentioned advisedly because it will require much more positive voltage to reach the upper limit or saturation point than negative voltage necessary to cause the grid to repel all of the emitted electrons, that is, to drop the plate current to zero. A large number of cells ("C" battery) may not always be available. Usually not more than 10 to 15 volts negative grid are required on the ordinary receiving tube to lower the plate current to zero. Fifteen volts may be obtained from 10 new dry cells.

Beginning with zero voltage on the grid, then by taking successive readings in a positive direction, and next in a negative direction (changing the grid potential 2 volts at a time by moving arm P the necessary distance across the resistance wire), let us say that the respective meters show the following deflections:

Cause, (E_g) Grid Volts		Effect, Plate Current (I_p)
		Milliamperes
Negative.....	12	0 0
	10	25
	8	70
	6	1 40
	4	3.00
	2	4 80
Zero	0	7 00
Positive...	2	9 25
	4	11 10
	6	13 50
	8	15 60
	10	17.40

These readings are sufficient for all practical purposes because we have kept within the working range of the tube. A tube of this size is never actually worked with such high plate current as, for instance, 17 m.a., because it would overheat, but it can be seen that the plate current continues to increase as positive potentials are applied to it.

Graph.

Three characteristic curves of one tube are taken at different intervals and are shown in Fig. 154. We are only interested at this time in curve *B*, the 90-volt curve.

This graph was plotted from the data taken and the curve depicts the characteristic variation in the plate current for changes of grid potential both above and below zero with the plate potential maintained constant at 90 volts. In other words, we attempt to show, by this simple means, how an alternating voltage impressed upon the grid would affect the plate current.

Take any two similar positive and negative values, for instance, + 6 volts and − 6 volts and note the difference in the amount of the plate increase above normal (that is, the plate current at 7.0 m.a. with the grid at zero) and the decrease below normal or below 7.0 m.a. For the positive grid charge the current increased about 5.6 m.a. and for the negative grid charge the current decreased about 5.6 m.a. The relation of these two values will undoubtedly vary in different experiments. With precision instruments and great care this difference may be reduced so that practically there would be an amount of increase equal to the decrease of current for equal positive and negative grid changes.

How a vacuum tube may be operated as a *detector* or *amplifier* by adjusting the plate voltage will be explained further on in the text.

The tube mentioned in the above observations and operating at 90 volts, as shown by the curve *B* in Fig. 154, is functioning as an amplifier, because the plate current strength varies up and down (to certain limits) by equal amounts for equal grid voltages. There is no distortion, or non-uniform plate change. The plate current is simply repeating in amplified form exactly what the grid receives (meaning the voltage changes that are applied to it).

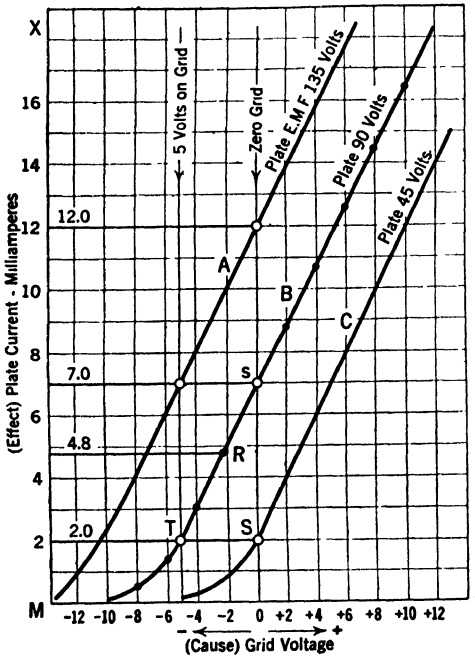

FIG. 154.—Curves used in explanation of voltage amplification constant and other static characteristics.

Let us now make a similar comparison on curve *C*. For an equal positive and negative 6-volt grid change respectively note that the plate current increases as much as 5.75 m.a. above point *S*, and decreases below *S*, not by an equal amount, but about 2.0 m.a., almost lowering the current to zero.

The unequal rise and fall or non-uniform variation of plate current for equal grid changes indicates that the tube at 45 volts as shown by curve *C* is functioning with a detector characteristic. *A positive charge of a certain magnitude caused a greater change in plate current than a negative grid charge of equal magnitude.* The detector grid is never worked at such large voltages and this explanation is intended only to show the order of the magnitude of the effects.

From this graph it can clearly be seen how the principles of amplification and detection are explained. It is only left for us to apply an alternating signal voltage or any alternating e.m.f. to the grid and operate the tube with whatever characteristic we choose, either as a *detector to produce a non-uniform plate-current variation, or as an amplifier producing a uniform or undistorted variation.*

An alternating e.m.f. will rise in value first in a positive direction and then reverse and rise again in the negative direction. Remember that an alternating e.m.f. supplied to the grid from some external

source would change in value so rapidly that a comparison is not practicable. In a few words, we attempt to simulate, by reversing the polarity of the " C " battery, the effects of an alternating current flowing in any circuit connected to the grid.

The procedure for locating the points of each set of values through which the curve is drawn has been explained. However, one or two locations may be given in order to make the explanation absolutely clear. For example, relating only to the curve *B*, Fig. 154, and comparing it with the data given, the curve is derived as follows:

From the point *O* (zero) on the horizontal axis *MN* draw a perpendicular line, next from the location on the line *MX* indicating a plate current value of 7 m.a. draw a horizontal line to the right until it intersects the perpendicular line just drawn, and where these lines intersect place a dot as shown at *S*. The other dots or points of location, as at *T*, *R*, etc., are similarly established. Now draw a line through, connecting all the points.

The curve derived illustrates in graphic form the characteristic variation in plate current for the grid voltage changes.

Discussion of the Results.—The overall rise of the plate current is not directly proportional to the equal grid changes of 2 volts each.

The plate current begins to increase very gradually until it reaches a critical point, at the knee, and, from there on, the rise is very rapid and continues to be until another upper critical point is reached, at the upper knee (not shown). From this point on there is little increase in current and the flow will remain steady, as would be shown by the flat horizontal part. Actually the curve may lower somewhat after passing the highest or peak value at the point of saturation, but this secondary action is not a normal function of the tube and it does not interest us.

This illustrates the characteristic variation of plate current, or electronic current, which is the same thing, whenever an electric current current passes through a vacuum.

The result in curve *A* shows conditions when the plate potential was maintained at 135 volts and the grid voltage varied in the manner suggested. Curve *C* shows the plate current changes when the plate e.m.f. was reduced to 45 volts. All of the curves have the same characteristic rise, but differ only in the magnitude of their respective values.

Observe particularly how the plate current is raised and the location on the curve for zero grid is shifted upward when the plate voltage is increased. That is, with 45 volts the plate current is 2.0 m.a., with 90 volts the current increases to 7.0 m.a. and with 135 volts on the plate it rises still further to 12.0 m.a. This is a very important factor because

it can be seen readily that we may operate a vacuum tube at some point near its lower bend or knee, or we can shift the working point upward to some location along the linear portion. Furthermore, assuming that the plate voltage remains constant at 90 volts we can control the plate current flow (shift the working point) by adding negative voltage to the grid. For example: Refer again to curve *B*. With zero voltage on the grid the plate current is rather high, or 7.0 m.a. shown at *S*, and by supplying the grid with about 2 volts negative the plate current drops to 4.8, shown at *R*. *R* and *S* are both located along the linear or steep part of the curve.

This is the region along which the tube is operated when functioning as an amplifier. When we speak of this action we usually say: "*The tube is operated on the straight or linear portion of its characteristic curve when employed as an amplifier.*"

Using the same tube and at the same plate voltage it can be operated still lower on its characteristic curve by applying more negative grid voltage. Then by increasing the negative grid charge from 2 to 6 the working point on curve *B* will shift downward near location *T*, in the neighborhood of the lower bend. We could also operate the same tube at its lower knee at point *S*, by decreasing the plate voltage from 90 to 45 as shown by curve *C* and then remove the negative grid bias, thus operating the grid at zero potential shown at *S*.

Then, if a fixed amount of grid negative potential is continuously held on the grid and for a given plate voltage, a vacuum tube can be operated along any point on its characteristic curve.

It should be remembered that a vacuum tube is operated only at the lower knee of the curve when employed as a detector.

It will be shown later that the working point on the characteristic curve is adjusted by applying fixed amounts of negative voltage to the grid—called *biasing the grid.* Hereafter we will use the term *grid bias,* which means a certain amount of negative voltage. The battery used to supply this bias is a "C" battery. The bias may be obtained in other ways than by the use of a battery. Several methods have already been suggested.

The theoretical explanation of the complete grid action has been given and the curves verify this theory.

Conclusions.—Two important facts have been established by the experiment. First, the plate current in a vacuum tube varies according to the "square law" as explained by the logarithmic curve in one of the preceding paragraphs; second, the normal current flowing through the plate circuit can be increased or decreased (meaning that the working point can be shifted) by applying a suitable negative bias.

The plate current varies in proportion to the electrostatic field, squared. The electric field of the charged grid at any instant affects the electric field at the plate; hence, the total effectiveness of the electric field upon the emitted electrons or the space charge at any instant is determined by the plate voltage and the grid voltage. This ratio of plate current, grid voltage and plate voltage may be expressed in a manner similar to the ratio given in a preceding paragraph dealing with the $E_p - I_p$ curve, where the grid was made ineffective, or zero, for the purpose only of finding the relation of the plate current to the plate voltage. Therefore, the two ratios are quite alike, with the exception that in this case the effect of the grid electric field in E_g is included, or $I_p \propto (E_g + E_p)^2 \times K$

Let I_p = plate current;
E_p = plate voltage;
E_g = grid voltage;
K = a constant for each set of values whenever there is a *cause* and *effect*. The *cause* throughout this discussion is the voltage applied to the grid, as well as the fixed voltage on the plate, and the *effect* is the amount of direct current which is carried in the plate circuit. For example, suppose we select arbitrary units, and say 5 is the cause and 2 is the effect; then 5 squared or 25, divided into 2 will equal .08. Therefore .08 becomes K.

The characteristic curve (or static curve) of a tube operating with a plate potential of 22.5 volts is shown in Fig. 155 only to illustrate a complete curve of the overall effects when the grid increases in positive value, until an upper limit is reached wherein the plate is receiving the full quota of electrons, as shown at S (saturation point), necessary to neutralize its positive electric force.

As stated previously, the grid and plate are electrically charged bodies and create in the space surrounding them an electric field of definite magnitude. This depends upon the amount of voltage applied to either electrode at any particular instant, hence, the use of the term *static* curve.

The following paragraphs will explain the two fundamental uses of the vacuum tube, the detector and the amplifier. From the facts already given, it should be readily understood how the plate current will rise or fall in value in a manner peculiar to vacuum tubes when an alternating voltage is impressed upon the grid.

Vacuum Tube Detector.—A simple vacuum tube detector circuit is illustrated in Fig. 156. The primary circuit comprises the antenna and coil L_1 which is inductively coupled to the secondary circuit formed by coil L_2 and condenser C_2. The detector tube is connected to the secondary tuned circuit in the manner shown.

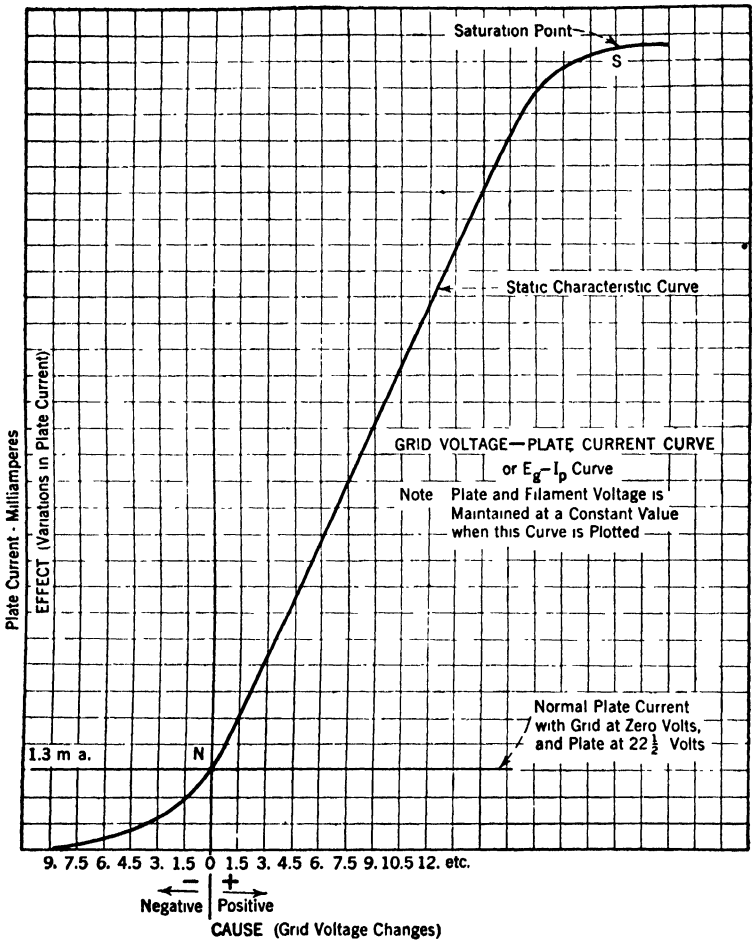

FIG. 155.—Plate current variations plotted against changing grid voltage values.

Consider the action of the tube when the antenna circuit intercepts a group of damped oscillations radiated by a distant transmitter.

The curve in Fig. 156*a* shows one group of received high-frequency energy, composed of three oscillations whose amplitudes gradually die out. Actually more than three oscillations form such a group, usually

more than 25, but the explanation can be completed better by using this limited number. As soon as the reader or student grasps the idea of detector action, the principles may be applied to any number of oscillations and groups, or any wave form.

These waves are of such high-frequency that mechanical devices

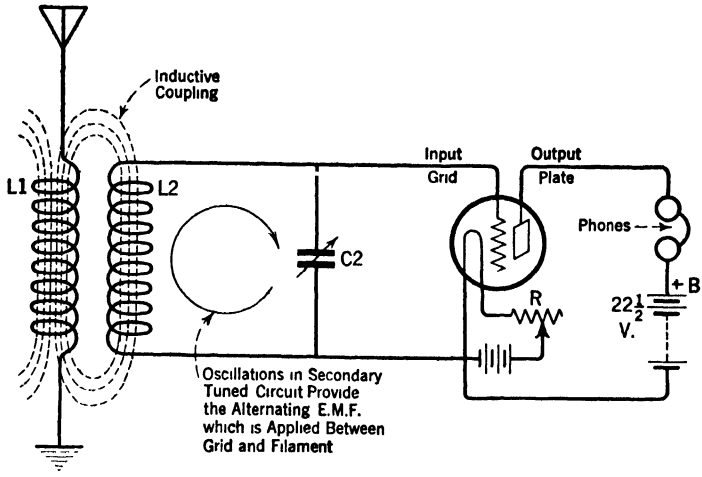

FIG. 156.—A fundamental vacuum tube detector circuit.

like the moving coil of a meter or the diaphragms of a telephone receiver are unable to follow their rapid oscillations. This is due to inertia. However, such devices will respond to an average of the oscillations over a certain period.

Now, when the secondary circuit is tuned in resonance (by means of variable condenser C_2) with the primary, the oscillating currents shown by the curve in Fig. 156*a* will set up a varying magnetic field around L_1 inducing an alternating e.m.f. across coil L_2, because there is mutual inductance between L_1 and L_2. This alternating voltage will be impressed between the grid and filament of the tube, for the grid is connected to the top side of the coil and the filament to the bottom side. Figure 157 indicates how the grid will receive a positive voltage impulse when the induced e.m.f. in the coil L_2 is in such direction as to make the upper end positive. It also shows how the grid is charged with a negative potential when a reversal of e.m.f. in the coil makes the upper end negative.

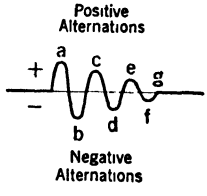

FIG. 156*a*.—Showing a group of decaying oscillations in a damped wave.

Since an alternating e.m.f. throughout its cycle will produce a con-

tinuous fluctuation of voltage, first rising and falling in one direction, and then reversing to rise and fall again in the opposite direction, the grid must assume the same voltage variations supplied by the secondary circuit. Fundamentally this is true of all vacuum tube functions; that is, the grid swings first positive, then negative, when an alternating e.m.f. is applied to it. (This is a theoretical consideration because in actual usage the grid is always supplied with a constant negative bias.)

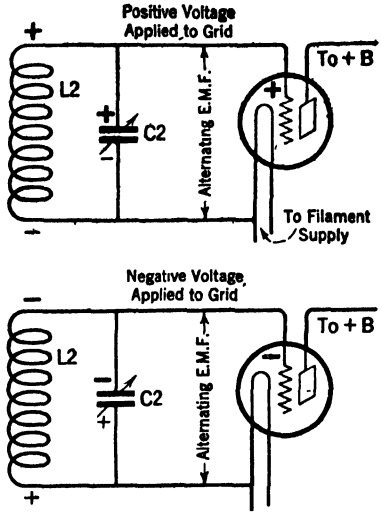

FIG. 157.—Showing the principle of how positive and negative voltages are applied to the grid when signal currents circulate through the oscillatory circuit.

Let us assume that the receiving tube in Fig. 156 is rated for a filament terminal e.m.f. of 5 volts and proceed to adjust the rheostat R to provide the correct current. The plate is now connected to the positive terminal of a 22.5-volt "B" battery.

The characteristic curve for this tube operated at the low plate voltage will appear as in Fig. 158. The normal steady flow of current in the plate circuit, let us say, is 1.5 m.a. It is seen that the working point on the curve is at the lower knee at Z and this is to be expected from the results of Experiment 1-A. The grid voltage, when no signal oscillations are impressed upon it, is assumed to be zero because the grid return lead in this case is connected to negative filament.

This condition of zero voltage is noted on the graph by the vertical line erected at zero. It crosses the curve at Z, thus indicating, as stated above, that the plate normally will draw 1.5 m.a. when no signals are received.

With these facts outlined, let us now apply the alternating voltages of the damped oscillations of the curve in Fig. 156*a*.

The alternating e.m.f. induced in the secondary is shown on the tube curve in Fig. 158 on the zero grid voltage axis. Note that the amplitudes of alternations A, B, C, and so on, diminish in value until at G they decay and finally die out. The amplitudes to the right of zero are positive and will charge the grid positively according to their amplitude strength. The alternations to the left are negative in value and charge the grid negatively.

It is quite unnecessary to know the numerical values of the positive signal voltages, or, for that matter, the negative voltages, because we already know the characteristic action of the effect of grid electric charges on varying the plate current. Hence, we have assumed arbi-

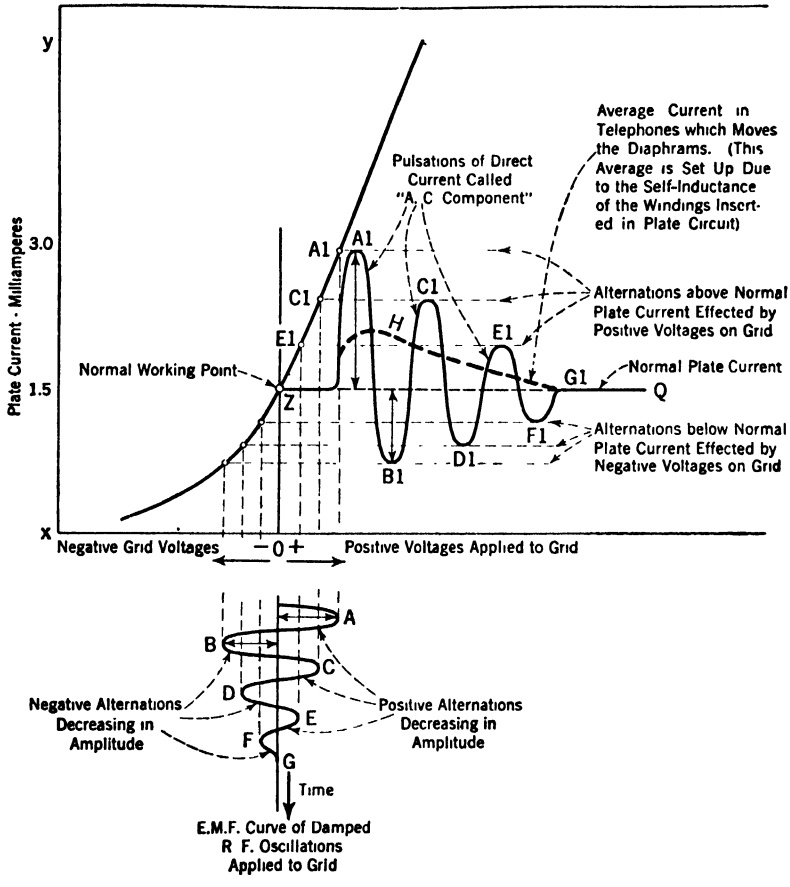

FIG. 158.—Showing how when a damped wave is received the current in the telephones is the average variation in plate current in simple detector action. Note that the average variation is set up due to the self-inductance of the windings inserted in the plate circuit.

trary units representing such values, as shown by the amplitude height of the successive alternations.

Now let us analyze the effect of these alternations of voltage impressed on the grid. If a dotted vertical line is projected upward from the apex of each alternation, from *A*, *B*, *C*, and so on, these lines will intersect the characteristic curve at points as shown by the white dots.

Horizontal lines could be drawn from each one of these points and where they cross the plate-current axis XY it could be ascertained how much change in plate current was effected for every voltage alternation on the grid. We are not interested in the exact amount of the plate current at any particular moment but do wish to know the manner or ratio of its variations.

To *visualize* this effect upon the plate current, we have shown how the plate current increased from Z (normal) to $A1$ due to the positive alternation A applied to the grid. Next there is drawn a second variation or alternation in plate current, as it decreases in value from $A1$ to $B1$, due to the alternating voltage swinging from positive to negative as shown by the change from A to B in the amplitude of the signal energy.

This time the input voltage varies from a negative value at B to a positive value at C and the change in plate current now rises from the lowest value it attained at $B1$ to $C1$. Notice that as the grid voltage increases and diminishes in strength at every alternation and as it swings from positive to negative for successive alternations, the plate current is following these variations, for it is seen that the plate current rises to a certain magnitude above normal for positive grid voltages and decreases below normal for the negative grid voltages. Furthermore, when the signal energy ceases to be impressed upon the grid, as at G, the point where the oscillations damp out (die out) completely, the plate current returns to normal and flows steadily or at constant value thereafter, as indicated by the horizontal line from $G1$ to Q.

All of the plate current variations for given grid voltage changes have now been illustrated.

As stated before, we are interested in knowing by what proportions the plate current varies for the corresponding alternations of signal voltage. By carefully comparing the increases of current above normal with the decreases below normal it is readily observed that the amplitudes of the alternations of plate current upward at $A1$, $C1$, and $E1$ are much greater in proportion than the amplitudes of the alternations below normal, as at $B1$, $D1$, and F1.

To make this action clear we have drawn two arrows from zero grid voltage to A and to B to show that there is only a slight difference in their length. This difference is due to the rate at which the signal oscillations die out. We have also drawn two arrows from the normal plate current line Z to Q to $A1$ and Z to Q to $B1$ to show the marked difference in their amplitudes to the first two arrows (O to A and O to B). This difference in rise and fall of plate current is considered apart from the rate at which each of the alternations may diminish in strength.

We are observing a typical detector action because of this non-symmetrical (asymmetrical) variation in plate current.

Simple reasoning explains why there is so noticeable a difference between the plate current increases and decreases on either side of normal. The greater average change of the current conspicuously leans toward the values above normal, and this average or mean change which the plate current has undergone for this one group of signal oscillations is shown by the dotted line *H*.

This non-uniform change in plate current is due to the fact that we originally adjusted (by means of the plate voltage used, or 22.5 volts) the operating or normal working point of the tube at a location on its characteristic curve where the curve begins its abrupt rise, that is, where the slope of the curve is gradual and begins its steep ascent, called the lower knee.

The purpose then of the low plate voltage is to work the tube at the lower bend in its curve to give it a detector action.

All the dotted lines, if traced upward from *B*, *D*, and *F*, will cross the curve in the region where the current begins to fall off suddenly, at the lower part of the knee; whereas, if we trace all of the dotted lines upward from *A*, *C*, *E*, they will cross the curve where the slope is steep and straight. The current, then, cannot lower in value from normal point *Z* for a negative grid change as much as it can rise in value from *Z* for an equal or nearly equal positive grid change.

This non-uniform change (often spoken of as a distortion) in plate current for a given alternating e.m.f. impressed on the grid is generally known as *rectification*. Knowing how a vacuum tube functions and how the grid electrode will control the plate current, the action, strictly speaking, is not one of rectification alone. What happens is that the radio-frequency oscillations have been converted by this process into a pulsating direct current flowing in the plate circuit.

The action more exactly is that of a valve. The grid, despite its small surface area, as it is only a coil of fine wire, to which the feeble voltage impulses from an electromagnetic wave are applied, is functioning as a valve in allowing the plate current to flow in greater or less quantities, using the " A " and " B " batteries as the sources of power supply.

The rise and fall or pulses of the current are called alternations and they occur in synchronism with the grid voltage changes for which they are responsible. These radio-frequency alternations can then be called either the *radio-frequency component* or the *a-c. component* of the direct plate current.

The detector characteristic has been explained. Consider now the

effect of the alternations of plate current, as they occur with great rapidity (they represent the effect of the incoming radio-frequency oscillations), and flow through the plate circuit. Bear in mind that the telephone receivers are inserted in series with the plate circuit in our diagram in Fig. 156 and the direct plate current must necessarily flow through the magnet coils of the receivers.

Why an Audio-Frequency Current is Produced in the Detector Plate Circuit.— Since the magnet coils of the telephone receivers are wound with a great many turns of wire and mounted over an iron core their impedance is high, perhaps several henrys. The radio-frequency plate alternations, in attempting to flow through, will be opposed by the large self-inductance of the coils. In setting up an opposition called " choking effect " to such high frequency changes, a reactance voltage will be induced across the coils. This voltage is sufficient to cause an audio-frequency current to pass through the coil. However, radio-frequency alternations cannot pass through, due to the rapidity at which they occur. Accordingly, the average of all of the radio-frequency alternations in the group actually produces an effective voltage in the plate circuit, referred to above as reactance voltage, resulting in a change in value of the direct current at audio-frequency through the telephone windings.

This average current change for one complete group of oscillations is marked with the letter *H* and drawn with a heavy dotted line, as shown in Fig. 158. This change in the plate current from its normal steady value will create a changing magnetic flux through the iron core of the telephone magnet. It follows that the thin metal diaphragm will be attracted and be made to move from its usual fixed position, which it occupies when a steady or unchanging current is passing through the coils, that is, when no signals are being received. This motion of the diaphragm will produce one sound impulse.

A particular point is to be brought out here. Suppose 1000 groups of such oscillations are received every second with short intervals between. The diaphragms will then respond to or be attracted by the changing flux 1000 times during a second, the intervals allowing the diaphragms to spring back to their usual natural position, for it will be noticed that between the groups the plate current flows steadily without changing from its normal value. (Refer to Fig. 159.)

A distant spark transmitter might be adjusted to send out groups of wave trains at frequencies other than one thousand per second, and the diaphragms of the phones would respond to different group frequencies up to their physical limitations.

It can then be said that the plate current changes are at audio-

frequency because of the high impedance of the electromagnet coils in the ear pieces of the telephone head-set.

Suppose we remove the phones from the plate circuit and replace them with an audio-frequency transformer, the primary winding of

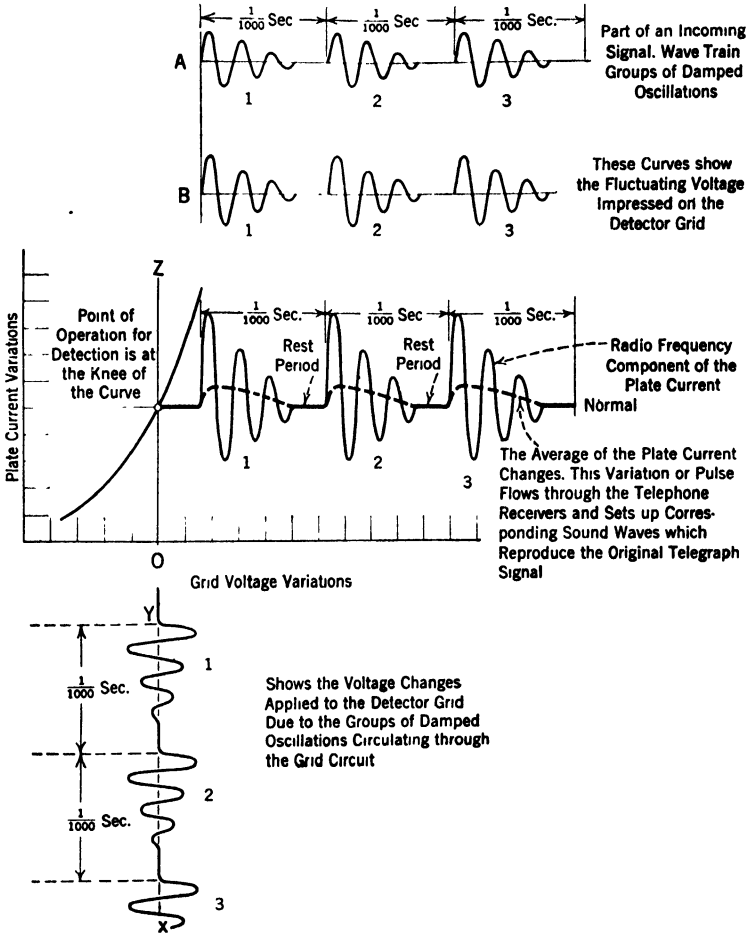

FIG. 159.—These curves graphically show how an incoming signal produces audio-frequency pulsations of plate current of a detector tube. They also explain the principles of plate rectification or power detection.

which will then occupy a similar relation to the whole scheme as the magnet windings. This time we do not expect to hear a signal directly from the output of the detector. The phones are now connected in the output of a following tube circuit known as an audio-amplifier circuit.

As the primary of the transformer is being made up of many turns and mounted over a laminated iron core it will set up a high reactance voltage to the radio-frequency alternations (a-c. component), allowing only the average of the alternations to pass through. The average, as we have already found out, is the audio-frequency component. Hence, the audio change in plate current through the primary will set up a changing field in the iron core of similar frequency and amplitude. By the action of the transformer an alternating voltage similar in frequency and form to the primary changes will be induced in the secondary. Again, we have an alternating voltage in a circuit to which the grid and filament of another tube is connected. The second tube is adjusted to operate with an amplifier action in order that the primary current may be further magnified or amplified, as stated previously, for actuating the loudspeaker. The set up of a detector tube output circuit coupled to an amplifier tube through an audio transformer is shown in Fig. 170. The amplifier action is explained in one of the subsequent paragraphs.

It is this average change in plate current throughout the duration of a wave train group that is utilized. It causes the diaphragms to be deflected. Hence, if the diaphragms move back and forth 1000 times in a second, the sound produced will be within the range of audibility where the average human ear is most sensitive.

Summary.— The detector, operating at the lower knee in its static characteristic curve (because of the low plate potential used), has fulfilled its duty in converting the radio-frequency current into a current of audio-frequency, that is, it acts to separate the high-frequencies from the modulated wave.

The fundamental principle that governs the operation of a vacuum tube detector lies in the location of the working point at or near the lower bend in the curve, where the plate current takes radical increases for positive grid changes and very slight decreases for negative grid changes. Any three-electrode vacuum tube will detect if we locate the operating point in this manner. The tube does not really detect, but provides suitable current by which the detection is made possible through actuating the sound reproducing device.

Not only is the plate current varied by the grid voltages but it is greatly amplified over that of the weak incoming signals. Hence, a detector tube not only *detects* or *rectifies* but also *amplifies*. This amplification characteristic of a detector is not to be thought of as its chief function, although it is fortunate that the tube possesses this inherent ability to build up the strength of a signal as well as to deliver to the output an audio-frequency variation of direct current.

The curve in Fig. 159 illustrates how the grid is charged by three

groups of damped oscillations. Groups 1, 2, and 3, curve A, show the energy as it is received in the tuned circuits. Curve B shows the grid potential as it alternates positive and negative at every cycle. The grid voltage groups are now transferred down to the zero grid voltage axis ZX, drawn in exactly the same form as curve B in order that we

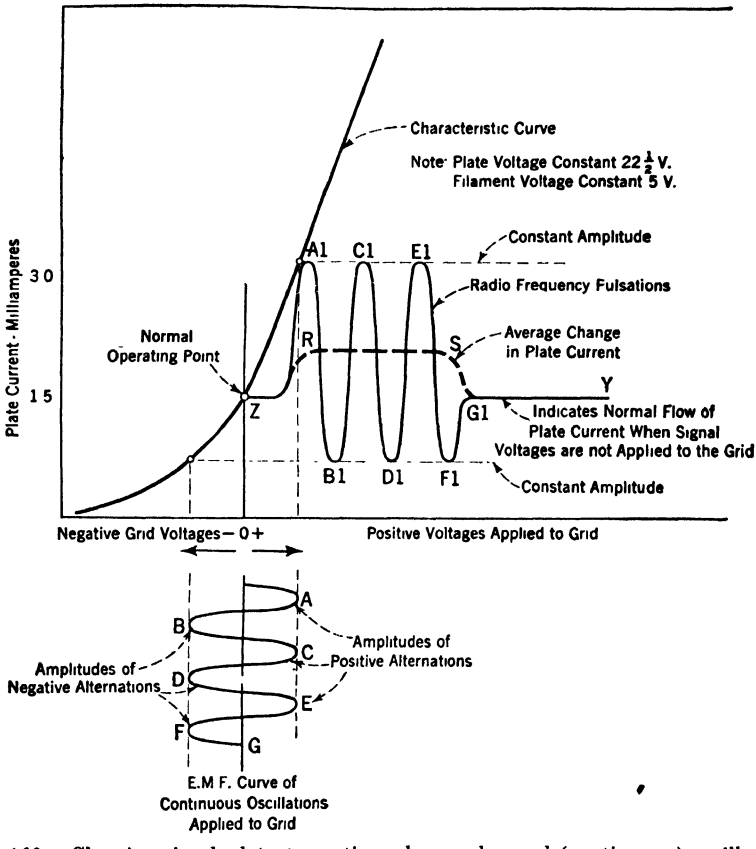

FIG. 160.—Showing simple detector action when undamped (continuous) oscillations are received. Note that the average plate current is steady throughout the duration of the oscillations.

may plot these potential variations directly on the characteristic curve. The time that elapses between the starting of groups is $\frac{1}{1000}$ second.

By projecting vertical lines upward from the peaks of each alternation and horizontal lines from the intersecting points on the curve it may be shown how the plate current undergoes an average or mean change in value as each group is received. In this specific case the diaphragms will be deflected three times in $\frac{3}{1000}$ second. As stated above,

1000 such groups would move the diaphragms at a rate to produce a buzzing sound or musical note.

When continuous wave signals are received by the simple detector circuit, the diaphragms will not respond to produce pulses or beats by which a note may be heard because there is no periodic change in the plate current.

This action is clearly shown in Fig. 160 and should be compared with the various curves in Fig. 158 showing the reception of damped waves. The constant amplitudes of the alternating voltages impressed upon the grid marked in Fig. 160, as *A*, *B*, *C*, *D*, and so on, produce

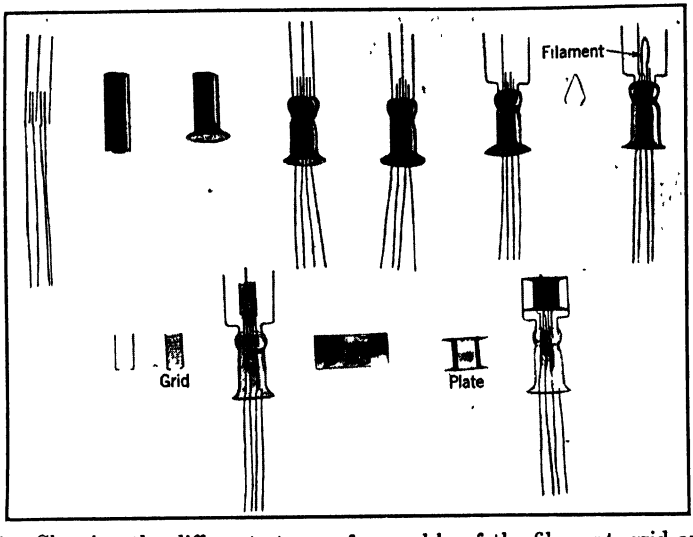

FIG. 161.—Showing the different stages of assembly of the filament, grid and plate elements of a vacuum tube.

alternations of plate current, also of constant amplitude, as A_1, B_1, C_1, D_1, and so on.

Although there may be an unequal difference between the rise and fall values of plate alternations, the average change shown by the heavy dotted line *RS* is a steady direct current and the absence of the fluctuations or pulsations will not cause a varying magnetic field to be set up by the magnet coils. However, Fig. 162 shows how, when continuous waves are received, which have been broken up into intermittent groups at the transmitter, the groups cause beats or pulses which move the diaphragms and between each group there is the necessary rest period to allow the diaphragms to be released from their attraction.

Thus it is shown that continuous oscillations can be rectified and

detected by a simple vacuum tube, if the oscillations are broken up or interrupted into groups having a frequency within the audible range, but there must be an interval of rest between each group to permit the diaphragms to be released from their attraction toward the electromagnet. In other words, the diaphragms are pulled over and held by the magnet during each group, and released at every interval. Therefore, shown in the curves, Fig. 162, the diaphragms will move back and forth one thousand times per second to produce a musical tone.

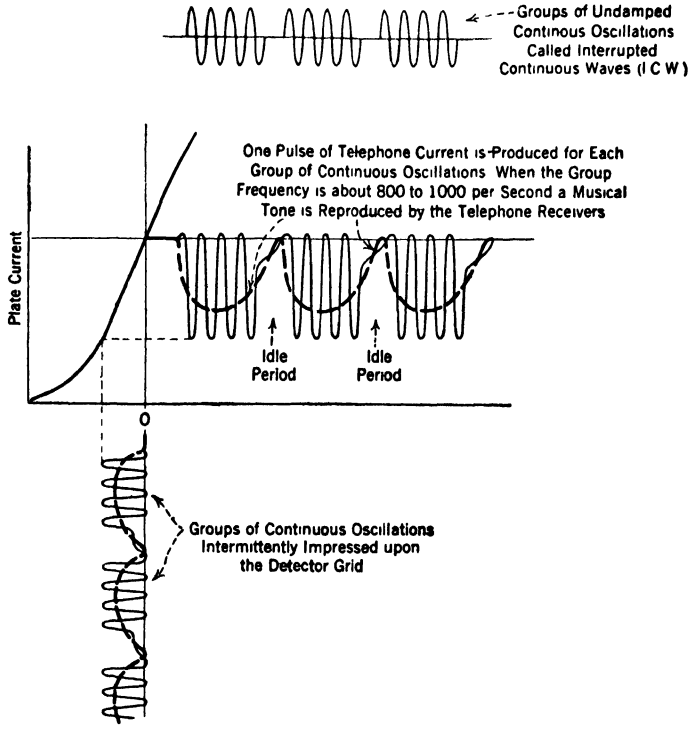

FIG. 162.—Curves showing in general the principles of detection of an interrupted continuous wave signal.

When continuous waves which are neither modulated nor interrupted are received and rectified by a simple vacuum tube detector the diaphragms are simply deflected very weakly by the electromagnet at the start of the oscillations, held steadily in attraction during the oscillations, and released at their termination. The diaphragms then will not vibrate periodically to produce sound.

A detector tube placed in any one of the usual forms of regenerative (feed-back) circuits can be made to generate its own oscillations which

heterodyne with continuous waves. The principles of heterodyne reception are given in the chapter on " Receiving Circuits."

Plate to Filament " By-pass " Condenser.—Furthermore, if we con-

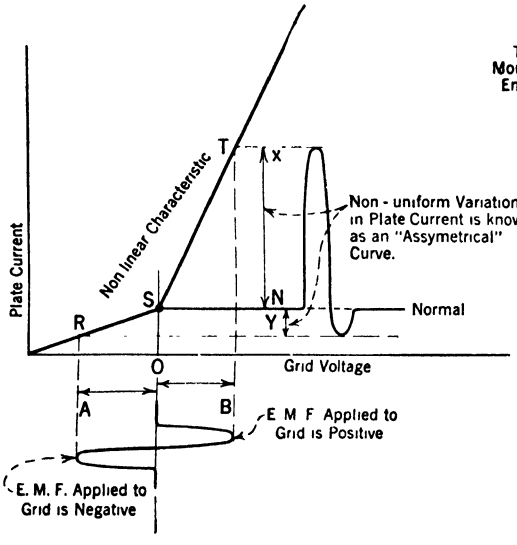

FIG. 163.

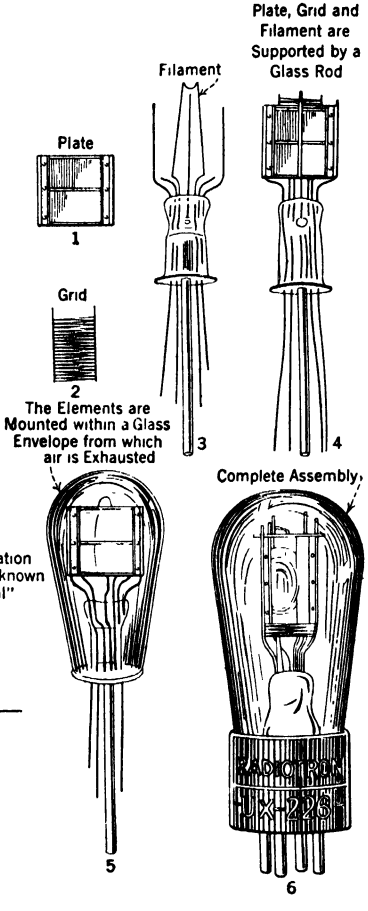

FIG. 163*a*.

FIG. 163.—How detector action may be explained by operating the tube on the lower bend of its characteristic curve. If OA and OB are equal (representing + and − grid charges) then NX and NY (representing plate current variations) will not be equal because RS and ST are unequal.

FIG. 163*a*.—The various stages in the assembly of a three-electrode vacuum tube.

nect a condenser of correct capacitance between the plate and filament (not shown in the simple drawing of the detector circuit, but to be found in the commercial circuits illustrated in the chapter on " Receiving Circuits "), an easy route or low reactance path will be furnished for the

radio-frequency plate alternations. Upon flowing through this by-pass circuit, their energy will be dissipated; hence, they will be removed effectively from further association with the audio-frequency variation in current, termed the *average* or *mean value.*

This radio-frequency component can now be considered an extraneous current, having already served its purpose in building up a reactance voltage across the phone windings. If this energy is allowed to pass into the audio channels, by means of the distributed capacity of the plate coil windings or phone cords, it may possibly interfere with the normal action of the amplifier tube circuits which we are about to discuss.

For the student who may be still in doubt as to how a non-uniform plate current can be made to flow when equal grid voltages are applied, Fig. 163 gives an explanatory line drawing. Because the zero axis *OS* crosses the line *RST*, upon which are plotted the values at the point or place in the bend at *S*, then it is easy to see that if *OA* and *OB* are equal (representing negative and positive grid voltages) that the vertical dotted lines drawn upward from the respective peaks *A* and *B* will cross at points *R* and *T*, respectively. Notice that *RS* and *ST* are unequal; therefore *NY* and *NX* must also be unequal; *NY* and *NX* indicate the fall and the rise in the plate current from its normal value, *SN*.

There is still one important feature that must be explained before discussing the amplification of the audio-frequency change in plate current to make it of suitable strength to work the mechanism of a loudspeaker.

This is the method employed in all modern detector circuits for improving and building up a greater average change in plate current for a given signal. By inserting a grid condenser and connecting a very high resistance, called a *grid leak* across the condenser, a very large change in plate current will result for a given signal strength, which, of course, will produce a greater amount of volume from the reproducing unit.

Grid Leak—Grid Condenser Method of Detection.—A detailed explanation of why the grid becomes increasingly negative during reception of a signal when utilizing *grid leak-condenser method* of detection is now given. The circuit diagram in Fig. 164 is only slightly different from the simple detector circuit used in the previous explanations because of the addition of the grid condenser and the grid leak resistance. Assume that the signals of the distant transmitting station are damped oscillations. As already suggested, a group of three oscillations will suffice and simplify the explanation. We know in actual radio telegraphic communication that damped wave trains may have twenty-four

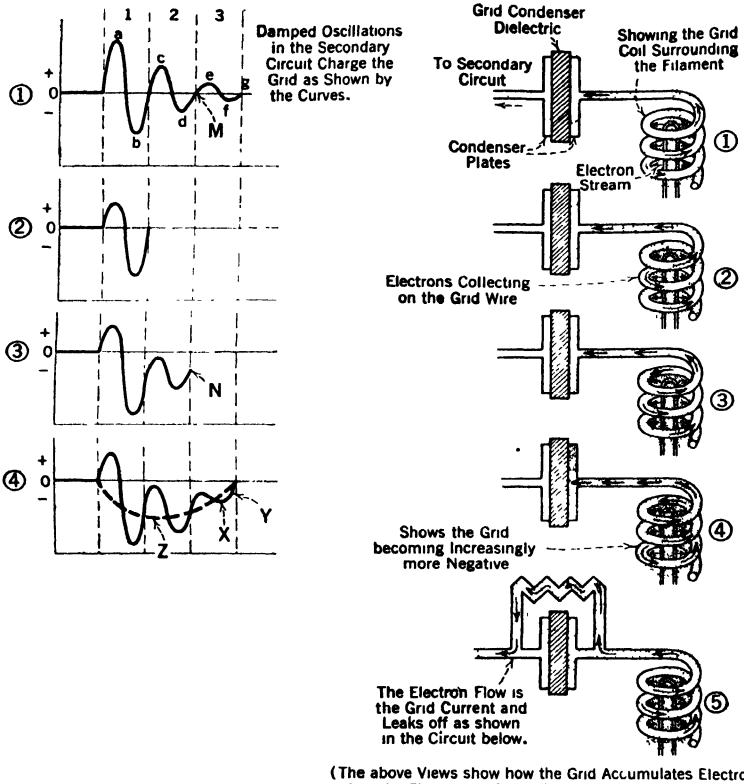

(The above Views show how the Grid Accumulates Electrons when the Fluctuating Signal Voltage is Impressed upon it and also how the Excess Electrons Leak off the Grid through the Resistance at a Predetermined Rate to Restore the Grid to its Normal Potential. This Rate is known as the "Time Constant." The Signal Voltages Readily Pass through the Grid Condenser and Charge the Grid as shown by the Curves in the Upper Left)

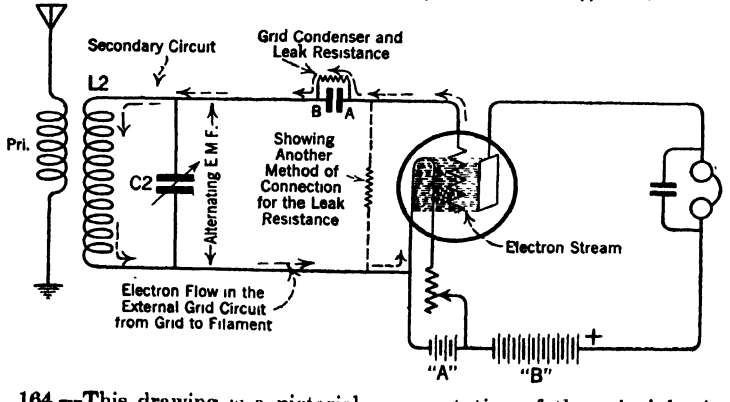

FIG. 164.—This drawing is a pictorial representation of the principles involved in the grid leak-condenser method of rectification. The views showing the filament and grid of the detector, as well as the grid leak and condenser, are greatly enlarged

or more oscillations of diminishing amplitude. The three oscillations are shown in the upper left of the diagram, each alternation being marked *a*, *b*, *c*, and so on.

Two positions for the grid leak are shown in the drawing, one with the grid leak shunted across the grid condenser, and the other in dotted lines, with the grid leak connected directly from grid to filament. In either case the electron flow will be in a direction from grid to filament, the only difference being that, in the first instance, electron energy must flow (shown by broken arrows) through the transformer winding L_2, which also carries the alternating current when signals are impressed upon the tuned circuit, but this will not affect the action, as far as we are concerned.

The average of the oscillations as received in a secondary tuned circuit is equal to zero when the increases on the positive side are all equal to the decreases on the negative side. It is necessary, however, to render the average of the waves something other than zero so that when these signals are repeated as pulsations of plate current they will cause the diaphragms of the receiver to vibrate back and forth at a frequency which will produce an audible sound. This is the function of the detector. The solution is found in two ways by means of a vacuum tube.

The first method is to operate the tube at some particular part of its characteristic curve where it will normally give detection as described in previous paragraphs.

Inspect the graph in Fig. 159 once more with the following purpose in mind. The drawing indicates that although pulses or beats in the plate current have been produced by means of rectification with the tube functioning as a detector, yet these fluctuations are comparatively weak, and lack sufficient change in value over the normal flow. This, of course, reduces the volume of the signal. To improve this action by obtaining a much stronger, or enlarged, pulse for the same given strength of signal is the purpose of utilizing the combination grid condenser and leak resistance.

The second method is by the use of the condenser and resistance which together act to shift the operating grid voltages substantially over toward the negative side. In Fig. 165 it is seen that Groups 1, 2, and 3 (the lower set of curves) are moved over to the left of the zero grid axis *ZX*. It may be said that the grid does not necessarily become positive although the signal alternations are reversing. But they are varying in a way that the grid receives a fluctuating potential which becomes increasingly negative and *changes only by greater or lesser negative* values. The resulting variation in plate current always follows the grid voltage

changes. By plotting the plate changes, drawing vertical lines upward until they intersect the curve and horizontal lines over from each point of intersection, it will be found that the plate current rises and falls in strength, but the variations are substantially *all below the normal line.*

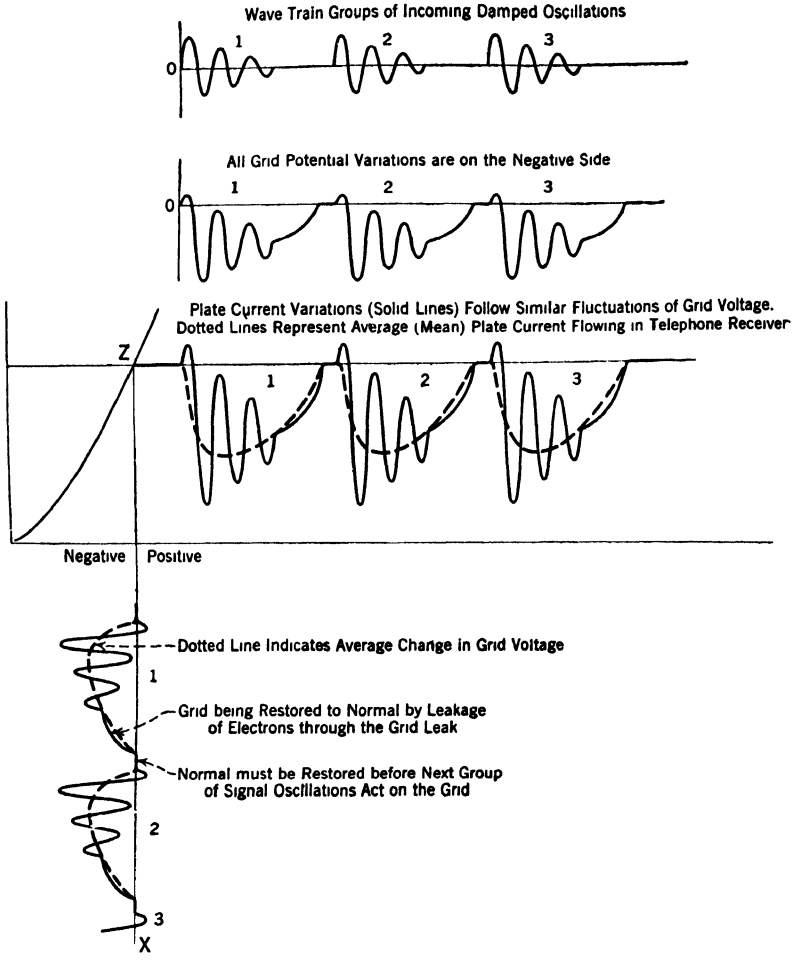

FIG. 165.—These curves depict the action of a signal wave setting up audio-frequency variations in the plate current of a detector tube when a combination grid leak and condenser is used.

It is obvious that the average or mean value of such a change must drop the normal flow to a considerable extent and thus cause a very large change in current as shown in Fig. 165.

This great difference between the steady flow, when no signals are

being received, and the lowering of the current, when signals are received, naturally causes the magnetic flux of the electromagnet in the phones to undergo a very wide change in magnitude. It is this strong magnetic effect that sharply acts on the diaphragms, causing them to move a considerable distance from their usual position of rest. This in turn causes a greater compression on the air surrounding them, hence, louder signals.

It is not the actual strength of the current flowing through the electromagnet in the ear-piece that determines the extent to which the diaphragm is deflected, but it is the change that the current undergoes which, in turn, varies the magnetism surrounding the magnet coils. It is apparent that the production of stronger impulses on the diaphragms by the greater average change in plate current improves the sensitiveness of the receiver.

The Action in Detail of the Combination Condenser and Grid Leak. —The fundamental action will bring out how the small grid current, due to the electrons attaching themselves to the grid, is put to a useful purpose. This is a normal action due to the position of the grid in the tube.

To comprehend fully the use of the condenser, one should review briefly a few of the principles concerning the conduction of electricity by means of the electron. We have listed below four of the more important points, with brief descriptions, in order to impress them on the student or reader:

(1) If the dielectric of a condenser allows electrons to pass through it slowly, it is called a *leaking condenser*. Obviously, a condenser with a supposedly *perfect* dielectric will not permit the movement of electrons through it. Hence, it acts as an obstacle to the passage of a direct current, that is, the grid current indicated by the broken arrows in the diagram, Fig. 164. Assuming the dielectric to be perfect, it may, in effect, be made *leaky* by connecting a very high resistance across its terminals or plates, as illustrated. A resistance of 1 megohm will suffice in our explanation to permit the slow movement of electrons through it. (One megohm is equal to one million ohms.)

(2) Another important point is that the capacitance of the grid condenser must be of such value that the alternating e.m.f.'s of the signal oscillations will pass through without any choking or high reactance effect upon them. The voltage drop across the condenser at each alternation will then build up to crest value and charge the grid most effectively.

In Chapter X on " Condenser " it was explained that a condenser of low capacitance when used with high frequencies will become charged

to a high voltage, and it is for this reason that the capacitance of the condenser most generally in use for this purpose is approximately .00025 microfarad.

(3) It is evident that the number of electrons passing to the plate per second (in other words, the intensity of the plate circuit current) is dependent principally upon two factors: First: the quantity of electrons emitted by the filament per second, as determined by the incandescence of the filament; second, by the electric field of force existing between the plate and the filament. The plate potential is governed, of course, by the value of the direct e.m.f. which is inserted in the plate circuit, from a " B " battery, for example.

(4) The function of the grid, we have shown, is to control the plate current. It is obvious that if a second field of force is introduced between the plate and filament, the electrostatic field set up around the plate and filament may be increased or decreased according to the polarity and the strength of the secondary field. It should be clear from the results of Experiment 1-A that it is the grid which sets up this secondary controlling field whenever a potential is impressed upon it by the signal current flowing in the grid circuit.

As mentioned above, the grid condenser will pass a radio-frequency current, due to the phenomenon of dielectric displacement. The condenser, however, will block the direct current flow. Hence, it is called a *trapping* or *stopping condenser*, or simply *grid condenser*.

Grid Condenser.—Return to Fig. 164 and analyze the action. The greatly enlarged view of the condenser and the grid leak, as well as the connecting leads designated in Drawing 1, show the grid coil in its usual place around the filament, where it will absorb some electrons even under ordinary conditions. Assume for the moment that there are no electrons upon it at the time the first alternation of the signal voltage begins to charge the condenser. This point is marked *O* in the top curve showing the three oscillations in the grid. Notice that during the first oscillation in Curve 2 the voltage on the grid is lowering because a few more grid electrons are added.

Now at the end of the second oscillation in Curve 3 the grid potential is exceedingly negative, as marked by *N*. The curve shows how the grid is responding to this action. According to curve 1, showing the incoming voltage, the grid should return to zero or normal, as indicated at *M*. But the grid does not do so, because this accumulation of electrons is actually trapped between the grid and the plate of the condenser and cannot escape. This depends upon the assumption that the condenser will not pass electrons through it, and that the grid will not emit or give off electrons, because of its comparatively low temperature.

The actual negative voltage on the grid at the end of the second alternation is indicated by the distance between *N* and normal, or what it was originally before oscillations were received. Observe that the plate of the condenser is becoming heavily charged with negative energy, as shown in Drawing 4. Perhaps the effect of this condition can be understood when it is said that an e.m.f. applied to the condenser from the tuned circuit will not actually charge the grid with a varying voltage similar to the original amplitudes.

All that the grid does now is to rise and fall in voltage value, but such values are merely changes in the amount of negative charge actually upon it from time to time. This is the *distortion characteristic* referred to in a previous paragraph.

Let us complete the last oscillation, indicated by respective positive and negative alternations *e* and *f* in curve 1. The grid will absorb a few more electrons in the manner already explained. Notice that alternation *f* is very feeble, due to the dampening of the oscillations, but on the other hand take note of the tremendous difference between the negative voltage actually on the grid at this specific time, and the normal or zero value, as at *X* in curve 4. View 4 shows the electronic accumulation at this time existing between the grid and the condenser.

The important point to be brought out here is that if no provision has been made to allow these imprisoned electrons to free themselves from their bond, then when additional wave trains or groups of oscillations are received, which are part of a signal (the single group shown in the drawing will be followed by other groups), the electrons will be stored up on the grid in large quantities. Eventually, the grid will be so heavily overloaded that the negative charge upon it may perhaps cancel or neutralize the positive voltage of the plate electrode of the tube.

The loaded grid then will block the electronic stream in the tube flowing to the plate and the plate current will fall to zero. It should be understood by this time how a negative grid of excessive magnitude will act in preventing the emitted electrons from reaching the plate.

It has been shown how the alternate positive and negative signal voltages, as they swing to either side of normal, simply add to or subtract from the voltage already on the grid, and the grid does not necessarily assume positive values at all with regard to the average change through all of its variations. The heavy dotted line *Z* in curve 4 shows the average for all of the grid changes and it will be remembered that whatever voltage change the grid assumes the effect will be repeated upon the flow of the plate current; that is, the plate current will vary with alternations up and down, but they will all be shifted over toward values less than normal. This point was previously explained when

outlining the purpose of this very important action concerning a vacuum tube detector.

A final and important fact to be considered is that when point X is reached in curve 4, the point where the last oscillation amplitude is about to decrease back to normal (and if no path is furnished to permit the trapped electrons to leak off the grid), then additional groups of wave trains would cause the grid to absorb more and more electrons, until it became so heavily negative that it would force the plate current to zero. The tube then would be paralyzed, or inoperative. This is an undesirable condition and herewith lies the principle use of the grid leak resistance.

Grid Leak.—Up to this moment we have mentioned only the part the condenser plays in fulfilling its purpose for a very large change in plate current from the normal value. Now to explain the grid leak action and then to sum up the various features of its usefulness.

By connecting the high resistance around the condenser as in Sketch 5, Fig. 164, it can readily be seen that a metallic path or conductive path is supplied through which the electrons may flow out to the secondary circuit. They will move away from the grid toward the secondary inductance L_2 as designated by the arrows in the circuit diagram through the turns in L_2, and return to their source, which is the filament. This flow of electrons is known as *grid conduction current.*

The object now is to control the amount of leakage current. This leakage should not flow away from the grid as fast as it accumulates, or the heavy negative charge will not build up sufficiently to move the plate current to large changes from its normal value. On the other hand, if the resistance is too great it will hold back more electrons than are actually needed to furnish the correct biasing effect, and possibly the grid voltage changes will not undergo such a wide variation in their average value. The average value is shown by the heavy dotted line Z in curve 4, Fig. 164. Both of these effects are graphically shown in Fig. 166.

In the final analysis, the grid is automatically restored to its normal value after the completion of the group of signal oscillations; that is, at the beginning of the rest period, which is for the purpose of allowing the diaphragms to be released from attraction to be moved again to produce a sound wave. This is designated by the line Y in curve 4, Fig. 164. The restoration of the grid effected through the grid leak resistance will permit the grid again to become charged by the next signal group. Fig. 165 illustrates three groups of damped oscillations with the sequence of changes between the reception of the energy and the final average or audio change in the plate circuit, that is, the cur-

rent flowing through the telephone receivers. The three groups produce three beats, three clicks being heard in the receivers. If these beats occur at a frequency of about 1000 cycles they will furnish a musical note in the output of the receiving set.

There are a few minor points that can be disposed of quickly. The leak is always connected across the condenser in a practical circuit. But it should be especially noticed that the leak was connected in at a precise moment for purpose of explanation; that is, when the condenser had completed its function in building up a large average change of

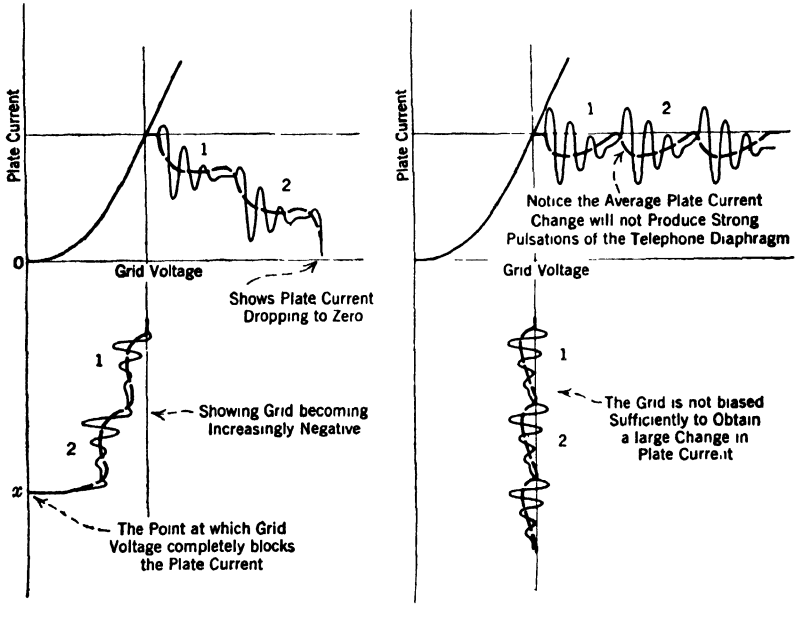

FIG. 166.—These curves show how incorrect grid leak resistance values effect the plate current in the output of a detector when employing the grid leak-condenser method of rectification. The curve on the left is the result of using a resistance too high in value whereas the curve on the right is the result of using a resistance too low in value.

potential in the negative direction, as the foregoing description has indicated. There will be a continuous flow of electrons through the leak, even when no signals are received, because the grid always absorbs some electrons. This is a natural function of the tube. Hence, this flow of direct current can be regulated by the amount of the resistance in the leak. It can be made to slow up or hold back enough electrons, at all times, to place a constant negative bias on the grid of some certain size or magnitude.

The flow of electrons is available to serve another purpose. A change

in the leak resistance value will make it possible to shift the working point on the characteristic curve up or down within certain limits in the region of the lower knee, until an exact location is found where the highest percentage of rectification is obtained, that is, where the detection characteristics are improved.

When we compute the positive voltages, working one way, against the negative voltages, working in the opposite way, in a group of oscillations in the secondary circuit, curve 1, Fig. 164, and compare the results to the *actual* up-and-down changes, or grid alternations, in curve 4, it is easy to arrive at the conclusion. The great difference between the effective overall change in grid voltage from its usual normal value is obvious.

The object is to provide a leak of correct value so that a small quantity of electrons may always be held back on the grid. Now we can safely assume that the grid actually will not be substantially charged positive in any event, even though a fairly strong positive signal alternation is impressed upon it.

This whole effect is shown in the diagram of Fig. 167 where N in curve 2 distinctly indicates that when no signals are received, as during a rest period, the grid is always slightly negative, and throughout the wave train of oscillations the voltage rises and falls, but only in negative values. Notice how amplitude AB, curve 2, which indicates the difference between a zero grid and the peak of the average variation, is increased over any of the other curves thus far explained. The plate current will lower, as seen by the depth of the average audio change in the dotted line, Curve 3. Curve 4 also shows the average audio change. or the telephone current.

Grid Leaks and Their Values.—The early types of grid leaks consisted of heavily inked strips of paper. A strip of the treated paper was enclosed in a small glass tube and the whole assembled and held together by means of a brass cap fitted over each end. The caps formed an electrical bond with the leak and also provided a suitable means for mounting the leak into clips. The metallized grid leak is employed extensively. Instead of using carbon-impregnated paper, the leak may be made by coating a glass rod with a thin film of a high resistance metal from a colloidal solution. The colloidal solution may contain graphite or some other suitable material. After passing the rod through the coating bath and then subjecting it to a heat treatment, the metallized deposit becomes exceedingly hard and durable. This film can be made to possess any desired resistance within a certain tolerance (meaning that it is accurate to within plus or minus a certain amount) by changing the strength of the colloidal solution.

The difference between the magnitude of approximately 1,000,000 ohms as an electrical measurement of resistance and the actual

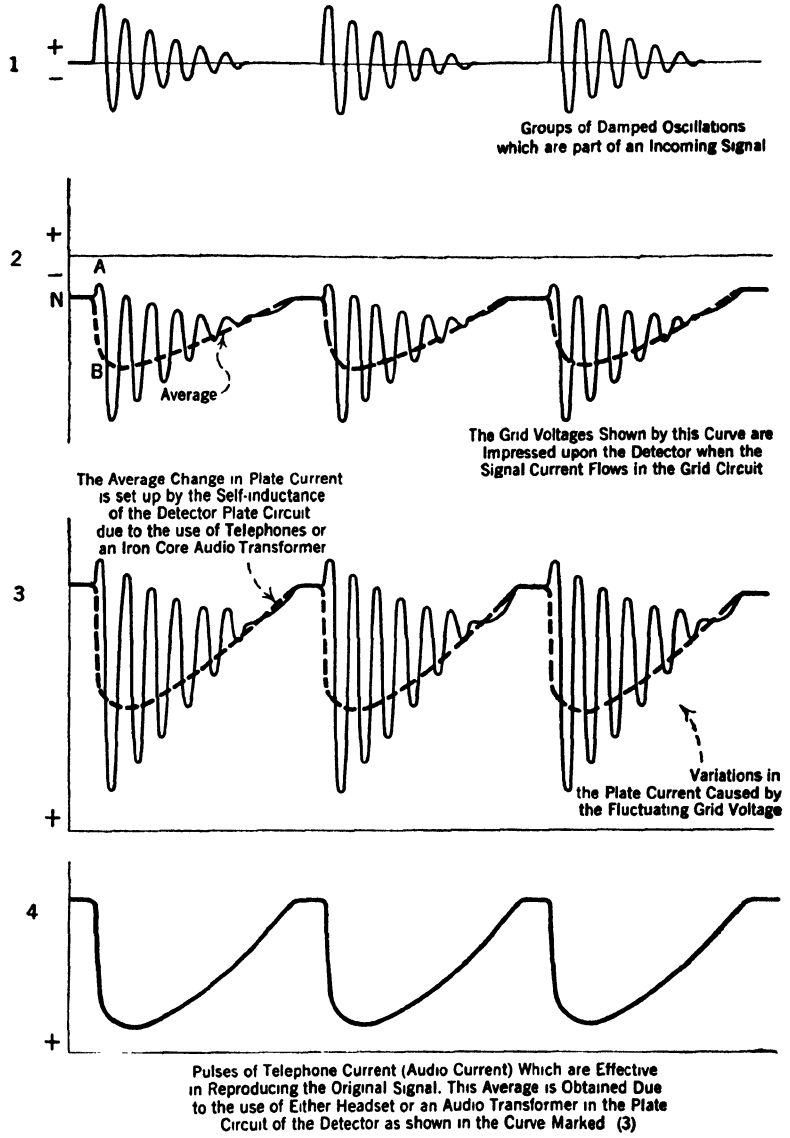

FIG. 167.—Four curves illustrating the various steps in the reception and reproduction of a radio signal. The wave forms shown in curves (2) and (3) are slightly exaggerated to illustrate the principle.

physical mass that will provide such an enormous value, can be visualized by drawing a heavy line (a few inches long) on paper

with a graphite pencil. The line thus drawn could be used as a grid leak resistor by connecting it in some suitable way to the respective terminals of the grid condenser. This, of course, is impracticable and unnecessary, but nevertheless it has often been done. The reason for surrounding the leak with the glass tubing is to protect it from moisture which might have the effect of changing its resistance value.

It may be proper to mention here that metallized resistors of large sizes physically, but low in their resistance values, are often used in various parts of either a transmitter or receiver circuit where a practically non-inductive resistor is required. For instance, they are used in resistance coupling, or grid suppressors (which are resistors of approximately between 200 and 800 ohms inserted in the grids of receiving radio-frequency amplifier tubes to prevent self-oscillation).

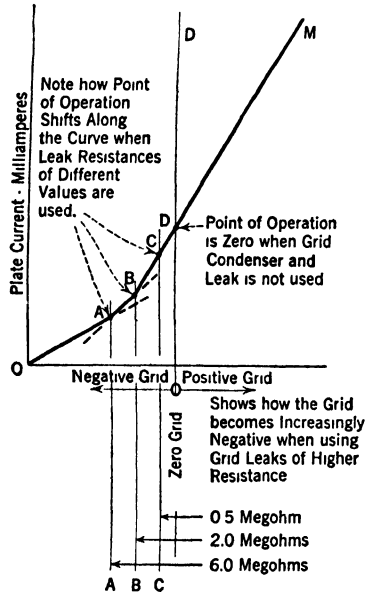

FIG. 168.—This curve is used to denote how the point of operation will vary when grid leaks of different values are placed in the grid circuit of a vacuum tube detector. The lower bend of the curve is exaggerated to illustrate the principle.

Noting again the detector grid resistor, or the so-called grid leak, their sizes range from .5 to 8 or 10 megohms, but the most frequently used values lie between 1 and 5 megohms for detector purposes.

Summary.—The curve in Fig. 168 gives the relative changes in the working point for three values of leaks used. The bend in the curve is exaggerated in order to bring out the effect. There has been no attempt to represent a true comparison of the amounts by which the grid is made more negative, as, for instance, where the different leak values might be subject to experiment in a certain detector circuit.

To summarize the purpose of the combination leak and condenser:

(1) *Condenser.* It functions to move all of the changes in plate current below normal, thus causing the strongest change in magnetism in the electromagnet of the phones.

(2) *Grid Leak.* (*a*) The main reason for using the leak is to prevent the grid from being overloaded and to allow the trapped electrons to be released.

(*b*) Besides, with the grid leak the operating point on the characteristic can be adjusted automatically.

(*c*) It will require a longer time for the trapped electrons to leak off when using a very high resistance and a shorter time for a low resistance. This means that the negative grid voltage is reduced to a fraction of its initial charge during a certain interval of time; or the elapsed time during the reception of a signal. The time interval depends upon the current handled by the detector. The combined grid leak and the condenser should be related suitably in order to give a *time constant* of correct value so that the trapped electrons may be enabled *to leak off at the proper rate.*

The question is almost certain to arise: What would occur in a detector circuit when signals other than damped waves originating from a spark transmitter are received? To clarify this point we have drawn two sample curves. The one in Fig. 162 shows the rectification and production of pulsations of plate current when an I.C.W. wave is received. The 1000 groups of continuous waves chopped up by the transmitter circuits will cause 1000 clicks to be heard in the phones, the audio plate current variations being designated by the waving heavy solid line. In the second set of curves (Fig. 169) the upper curve explains how a voice-modulated signal would appear coming from a broadcasting station. Its rectification and the resultant average audio variation in plate current are given in the irregular heavy line. The plate current through the telephone receiver changes in strength following the peaks and depressions which record the inflections of the voice. Also they may be due to the change in the tone of musical instruments, thus reproducing the original broadcast program.

Vacuum Tube Amplifier.—The fundamental reason why a vacuum tube detector possesses its sensitive *detecting* qualities is that it is worked in the region at the bend, or knee, in its curve. Also, when the grid condenser leak resistance method is employed, the actual grid voltage assumes a different wave form or grid voltage variation when compared with the signal oscillations curve.

The fundamental idea of the amplifier action is not to change the shape of the input voltages supplied by the secondary circuit, but simply to apply them in original form, or shape, and obtain from the tube an amplified reproduction of this input energy.

In accomplishing this object it is merely necessary to raise the plate voltage in order that the working point on the curve will be moved upward. If this is done, the point of operation will then lie somewhere

along the steep and straight sloping portion of the curve and not at the bend.

The purpose behind the amplifier action is to impress the grid with a varying voltage change of small amplitude and receive in the plate,

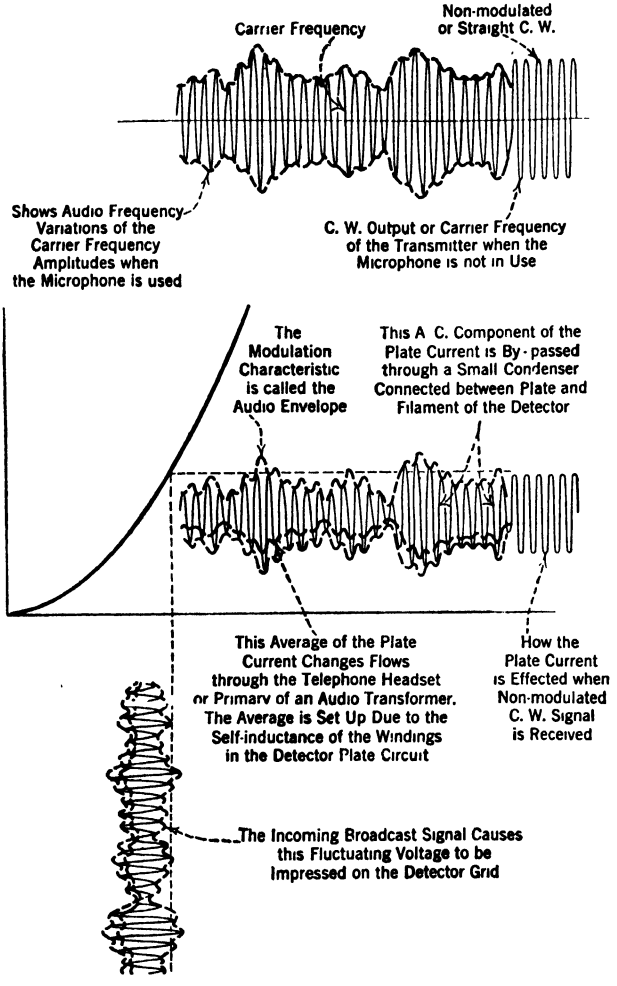

FIG. 169.—These curves convey in general the sequence of electrical action in a detector circuit when a signal modulated by speech or music is received.

or output circuit, pulsations of current much greater in amplitude, but exactly similar in form. Remember that the output current of the detector usually is only strong enough to operate a telephone head-set and never obtains sufficient power to actuate the motor mechanism of a cone type speaker or the electromagnet of the horn type.

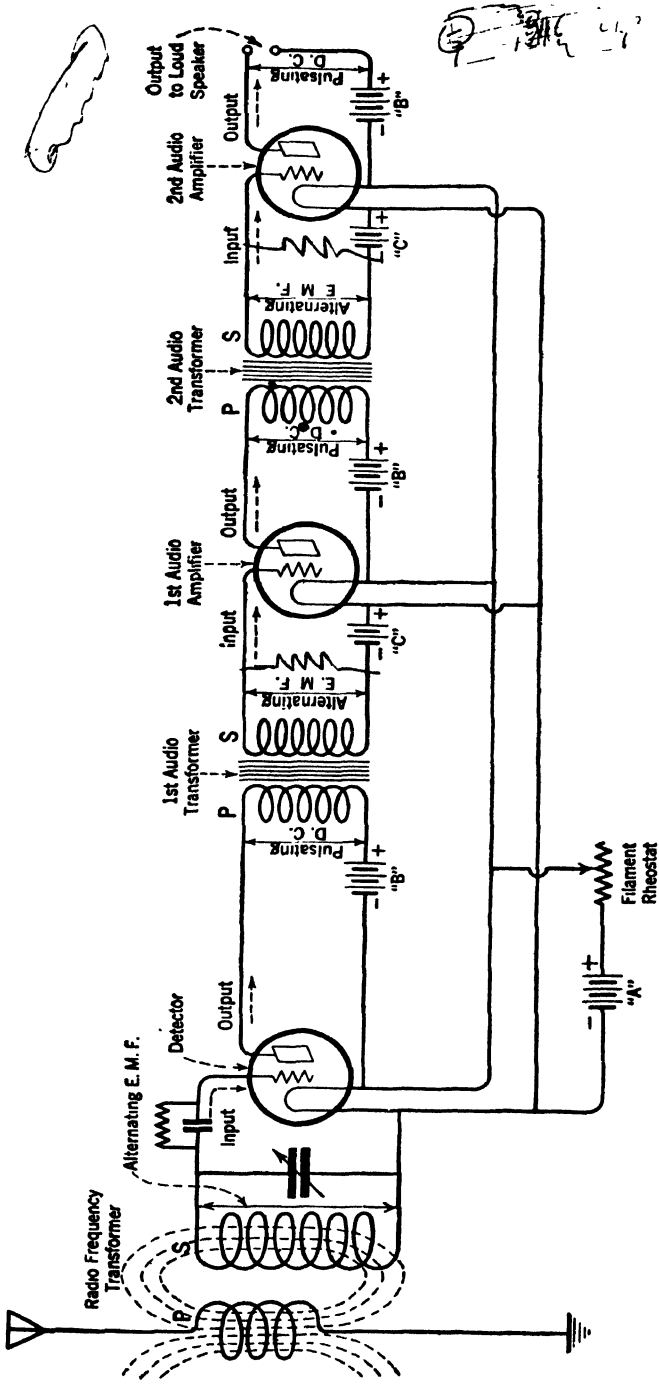

FIG. 170.—Showing the fundamental process upon which all vacuum tube circuits are operated, i.e., (1) the input energy is always in the form of an alternating voltage applied to the grid, and (2) the output energy is always in the form of a pulsating direct current. (The rise and fall of the d-c. values is called the alternating component.)

Refer to Fig. 170 where the detector tube is shown coupled through the audio transformer to the first audio stage of amplification.

Now turn to the curves in Fig. 171. It is clear that if we increase the plate voltage the working or normal point moves upward on the curve; if we decrease the plate voltage the working point shifts downward on the curve.

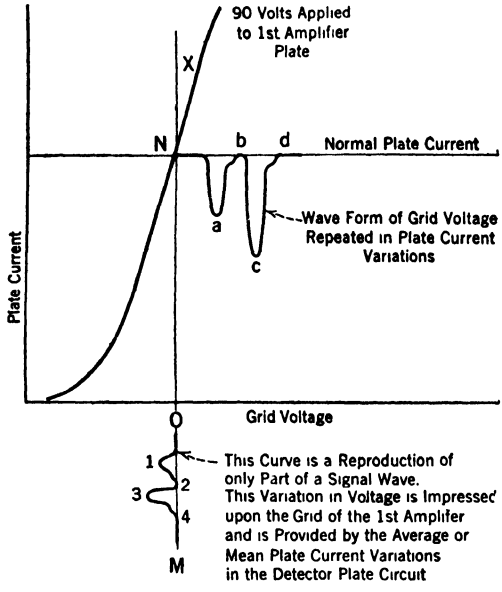

FIG. 171.—The curves show how amplification of a signal is obtained through the first stage of audio-frequency amplification.

The static curve indicated is one for 90-volt plate potential. The drawing shows how the new location (called n o r m a l plate current) is obtained at the center of the linear or straight line of the curve. Actually, the working point may be located along the linear part within certain limits, as long as the peaks of the rise and fall values of the plate current do not go beyond either the upper or lower knees. For the sake of illustration a condition on the graph has been given where the respective values can be shown easily.

The lower curve drawn to represent the grid voltage variations marked by amplitudes 1, 2, 3 and 4 shows the audio-frequency changes; because, as previously stated, the detector plate current changes in the primary of the transformer are the average changes of oscillations, or audio-frequencies. Hence, the magnetic flux (set up around the primary which permeates the soft iron core) induces an alternating e.m.f. in the secondary. Therefore, any wave form of the audio-frequency change in plate current in the detector will be repeated in similar form to be impressed upon the grid of the amplifier. This is absolutely essential to prevent distortion of the signal.

One could easily plot the plate current variations effected by the grid voltage changes from the descriptions already given dealing with the procedure for making these graphs. Project vertical lines upward from the grid voltage peaks 1, 2, 3, and 4. Dotted lines would intersect the curve, and locate the points. From these points horizontal

lines would then be drawn across the graph, thus obtaining the *amount of change the plate undergoes from its normal value.* We find that the plate current begins at normal and then varies from greater to less values, but all below normal. The great depth of the peaks *a* and *c* represents the amount of change in the plate current of the amplifier tube. This certainly indicates that a great plate variation will cause the magnetic flux in any ordinary sound reproducing device to vary in sufficient magnitude to actuate its diaphragm, but perhaps with limited volume.

Thus it is seen that the plate current varies constantly and in synchronism with the grid potentials; and that the wave form of the plate or output energy is *exactly* the same, or what might be considered a facsimile of the grid voltage curve. The only difference is that the plate amplitudes are immensely larger. This is amplification. A direct or proportional change plotted to a linear line is shown in Fig. 172 and is self-explanatory.

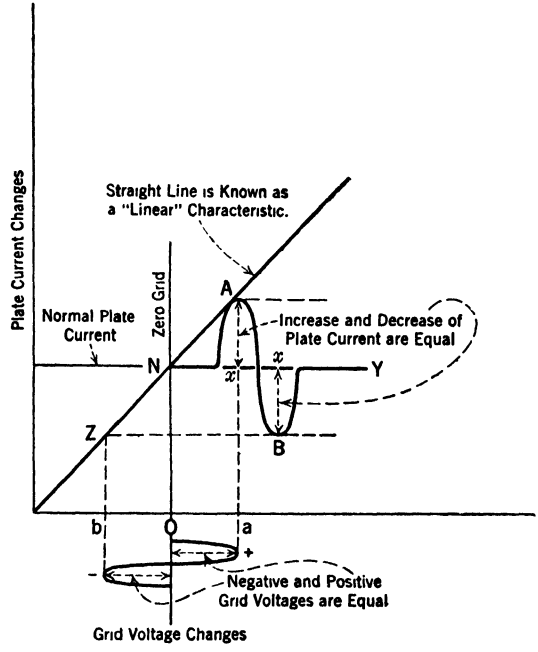

FIG. 172.—A chart for explaining a linear characteristic. Note that proportional changes are in a direct ratio. If the distance from *O* to *a* equals the distance from *O* to *b*, then *x* to *A* must equal *x* to *B* since *N* to *A* equals *N* to *Z*. (The straight diagonal line could be made steeper and different values of grid voltages could be applied.)

If the output of the first audio amplifier requires a further step-up in value to give a really satisfactory volume of sound from the speaker, a second stage with its tube may be added and connected precisely the same as the first tube was coupled to the output of the detector. Figure 170 shows how this is done. Always connect *output to input* by means of the coupling device, which, in this case, is the iron core transformer. Other forms of couplings have been treated elsewhere in detail.

The curve in Fig. 173 indicates that the plate current in the second

stage tube is repeating the wave form of the input energy, greatly amplified. We have purposely indicated large drops in plate current, nearly to the lower bend *C*. A close inspection of the rounding off of the curve at the lower bend, and the fact that the characteristic at this location is no longer a straight or linear line, reveals to us the fact that we must not expect to obtain a perfect reproduction of the wave form if the plate current is allowed to drop into this region, or below the point marked *C*. This particular amplifier tube is now working up to its maximum. In order to effect a further increase in volume without the possibility of distorting the wave, it will be necessary to

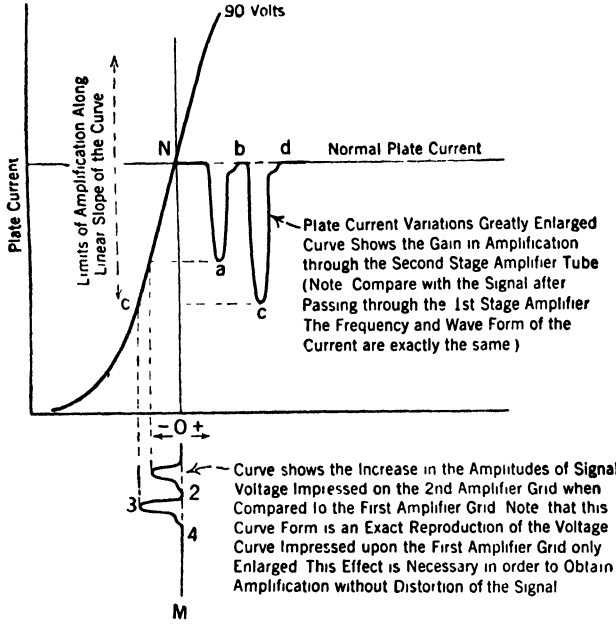

FIG. 173.--Curves illustrating the principle of audio-frequency amplification.

couple another stage of amplification to this output. The next tube will be one of greater size, called a power tube. Any desired volume may be gained by the stepping-up of the signal energy from one stage to another. This is called *straight amplification.* The tubes are in cascade arrangement.

The real purpose in employing a power tube is given in the end of this chapter.

Conclusions.—This characteristic amplifying action is also useful in other ways. For example, a power amplifier tube may be used in the capacity of a *modulator*. A modulator tube itself in a transmitter does

not do anything more than any tube operating as an amplifier. It simply steps up the audio changes supplied to it from the microphone circuit. The microphone output could be connected directly into the input of the modulator when using a small power tube. When a large power tube functions as a modulator, it requires one or more stages of audio amplification to step up the input operating potential on the grid of the modulator from the weak microphone current to allow the modulator to act effectively upon the oscillator to which it is coupled. In this way the audio current changes in the output of the modulator cause the amplitude heights of the high-frequency oscillations generated by

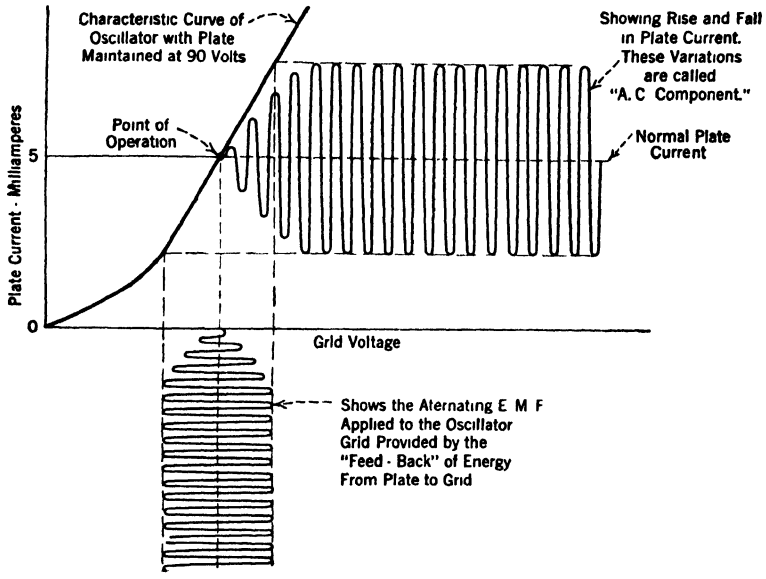

FIG. 174.—An oscillator tube is operated at a point on the straight portion of its characteristic curve.

the oscillator to vary according to the audio-wave form. Thus we find that a modulator tube operates with amplifying characteristic.

The amplifier characteristic is also used when any vacuum tube is to be operated as an *oscillator*. In Fig. 174 it is shown that when an alternating e.m.f. of high frequency is impressed upon the grid then the plate current will repeat these changes and also vary with pulsations or alternations of corresponding frequency, but the plate changes are greatly amplified. Hence, if a vacuum tube working with an amplifier characteristic is inserted in a circuit which has some arrangement provided for feeding part of the output or plate energy back into the input (that

is, to be reimpressed upon the grid), the tube, together with its associated circuits, will produce continuous oscillations. These oscillations are shown in the drawing as rising and falling between the limits of the tube. The special features involved for setting up a proper oscillatory circuit whereby the grid may be excited in this way, as well as the theory for this action, are treated quite fully under the caption "The Oscillator" in Chapter XII.

Only the following point need be explained and this section will be completed. If the working point is too high on the curve, which means that a large value of plate current must be flowing, it is possible to shift the working point downward on the curve to any desired location by means of the controlling action of the grid, when the grid is supplied with a fixed negative bias. Now, a certain bias is always placed on all tubes operating with amplifier characteristics, for actually the long, steep linear portion allows a great latitude of working points within limits. Our drawing is slightly exaggerated, in the first place, by showing the normal nearly in the center of the overall rise in the curve. Normally, the curve is higher than it is here shown, but it allows the point to be shifted downward and less plate current values will result. Consequently, the tube can be operated without undue heating of the plate. The table of tube characteristics gives the negative bias values for the different plate potentials used for different types of tubes.

In general the electrical conclusions that we have outlined in this chapter hold good for any type of tube or power. The effects, however, may be somewhat modified according to the requirements of a particular contingency or special features in the design of the tube.

The Purpose of Employing a Power Tube.—If a higher power amplifying tube is substituted in the output of a receiving circuit for one of lower power, for example, a UX210 to replace a UX171 or a UX250 to replace a UX210, an actual gain in signal strength is not always noticed. If the circuit is not properly designed for the higher power tube the amplification of the signal may actually be less. The purpose in using a power tube is not to obtain a high amplification factor (power tubes have a low amplification factor), but to enable the grid to receive large voltage variations which will be reproduced by plate current variations without distorting the wave form of such changes. This is true also of power tubes employed in transmitting circuits.

If the grid voltage changes are excessive, as the flow swings first positive and then negative, the grid will be overloaded and the plate current changes will be chopped off at the peaks. Under such conditions the tube is not faithfully reproducing the wave form of the signal. This is because, after a certain voltage on the grid is reached, the char-

acteristic curve flattens out, which means that for any additional grid voltage the plate current will not increase further. These peaks carry voice-frequency changes; if they are lost during the process of amplification through the tube, the quality of the signal will be impaired and distorted. By using a power tube having a comparatively low amplification factor, in conjunction with a loudspeaker, the actual signal is made louder because of the natural increase in the signal voltage input to the grid and because the tube hand a larger plate current normally. Either a high ratio transformer stage preceding the power tube, or an extra stage of audio amplification will usually provide this higher grid voltage input. The output circuit of the receiver should be designed expressly for the particular tube employed. The allowable signal voltage fed to the grid will be different for each type of tube and the amplification factor will not necessarily tell us how much volume we may expect from a certain tube. To cite a concrete example: In a UX201-A amplifier tube with an amplification factor 8, the highest grid voltage change that may be applied is perhaps only 5 volts before the tube begins to distort, that is, the plate current ceases to respond with variations exactly repeating the wave form of the grid energy. However, a UX250 power tube with a voltage amplification factor of only 3.8 will stand grid potential input variations of 50, 75, or more volts, and at the peak voltages the plate current will record the changes faithfully. This tube, despite its low amplification factor, will deliver a high output of signal energy, free of distortion. The UX250 tube will furnish about three times as much undistorted output power as the UX210, yet the voltage amplification factor of the first tube is only 3.8 as compared with 7.5 for the latter tube.

Transmitting Power Tubes.—On account of the increased use of the X-L filament type of power tubes, a few of the operating characteristics will be explained. The three materials used to any great extent for the filament wire in power tubes are tungsten, oxide-coated platinum and X-L or thoriated tungsten. The theory underlying the operation of a filament or cathode in a vacuum tube is given in this chapter under the caption " Electron Theory."

The X-L filament requires a lower power than other materials, to heat the filament for proper operating temperature, and the total electron emission for a given power consumption is comparatively long.

The above are the chief requirements of a filament in any vacuum tube. The life of a tungsten filament is limited because the electron emission comes from the surface layer of the thorium, which while constantly evaporating is also being replaced by the diffusion of thorium from inside of the filament. The thoriated filament is not a coated

wire; therefore, the available electron emission ends only when the supply of thorium inside of the filament is exhausted.

A pure tungsten filament wire reduces in size during its life, due to evaporation, and it is suggested that for best operation a voltmeter be used. Since there is no evaporation of tungsten in the X-L filament, either a voltmeter or ammeter may be used. However, the usual custom is to regulate the filament temperatures by the constant voltage method. The power tubes require an exceptionally good vacuum in order to obtain a uniform emission, and we find deposited on the inside of the glass bulb the silver-coated material, *magnesium*. This material tends to absorb any residual gases in the vacuum in the manner heretofore explained. The failure of a tube to function normally is usually due to a loss of electron emission which may be the result of the filament having been subjected to an excess voltage caused by an overload releasing gas atoms from the interior parts of the tube, but often it is due to leakage of air in the glass seals or leads in the base of the tube.

Any power tube is apt to be subjected to a short overload, and the X-L filament type has been found in practice to stand three times its normal voltage without a burn-out. When the plate is overloaded in the power tubes, gases are given off and the plate shows a dull red glow. In order to reduce the gases given off by a hot plate, the present type of X-L tubes are made with molybdenum plates which are heated to extremely high temperatures during the process of creating a vacuum in the tube. Heating the plate in this way also brings the temperature of the other internal parts of the tube to a higher point than they ever reach during normal operation, and this reduces the possibility of these parts giving off gases during their normal life.

In case of a very severe plate overload, the electron emission of a tube is usually reduced temporarily and in a great many cases this can be restored by operating the tube for a period of from fifteen to thirty minutes with the filament lighted, but with the plate voltage off. This reactivation process may be assisted by raising the filament voltage to about 15 per cent above normal.

If an air leak occurs in the tube it will lower the electronic emission; hence, the above reactivation is not applicable.

An air leak from the outside of the tube is usually indicated by a purple or pink glow, whereas when gases are given off from the electrodes or internal parts of the tube, the glow is distinctly blue.

The 7.5 Watt Tube.—This tube, type UX210, is the smallest of the transmitting tubes. (See Fig. 175.) The normal output is rated at 7.5 watts. The normal plate voltage is 350 volts and with this voltage a normal plate current of 60 milliamperes can be obtained.

The amplification constant of the UX210 is approximately 7.5. The mutual conductance value is 2150 micromhos.

As set forth in the latter part of this chapter covering vacuum tube constants, mutual conductance figures are useful for comparison purposes only, because they are obtained under zero grid voltage conditions. We know that under normal operating conditions the grid voltage is not zero.

In addition to its use in transmitting sets as an oscillator, modulator,

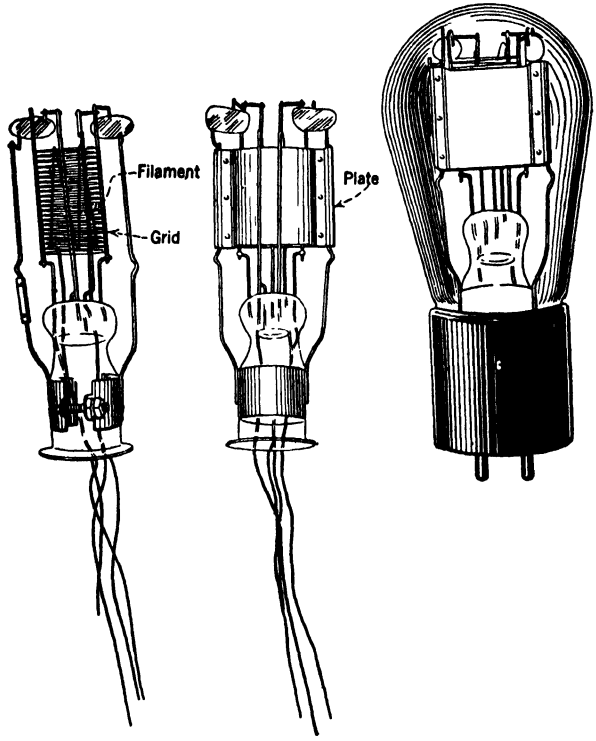

FIG. 175.—The UX 210 vacuum rated at 7.5 watts used in receiving and transmitting circuits.

power amplifier or speech amplifier, the UX210 tube is now extensively employed in modern radio receiving circuits where the last stage of audio-frequency amplification requires the use of a superpower amplifier tube. The plate voltage and plate current conditions are nearly as severe in the receiver as in the transmitting circuits. Reference to the characteristic grid voltage plate current curve in Fig. 176 will show that the tube is a typical amplifier in that each curve follows practically a straight (linear) line. A curve of these characteristics indi-

cates that the tube can operate at high or low plate voltages with the proper grid bias to produce an undistorted output.

The 50-Watt Tube.—The 50-watt power tube shown in Fig. 177 is the next larger size. This tube is made in two types which differ only in plate impedance and amplification constant. The plate voltage and the filament voltage rating, of the two types are exactly the

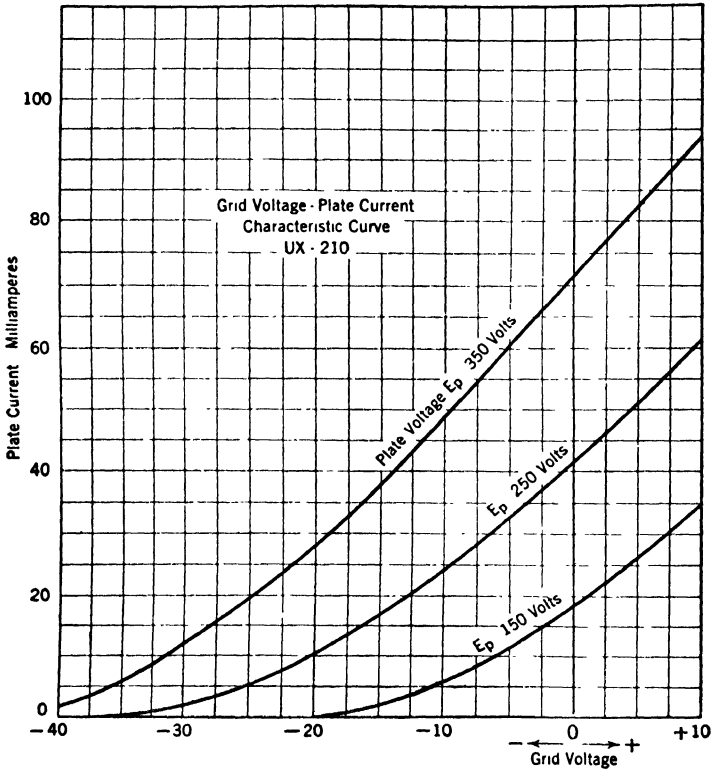

FIG. 176.—Characteristic curves of a 7.5-watt vacuum tube when operated at various plate potentials.

same. The type UV203-A is employed for amateur and experimental use, where voltage amplification is desired, while the UV211 is designed to be used in commercial sets for oscillator, amplifier or modulator. The filaments of both tubes normally draw 3.25 amperes at 10 volts, and the plate-power dissipation is 100 watts at a normal plate voltage of 1000 volts when the tube is used as an oscillator.

Low impedance is essential where undistorted amplification is desired because large grid voltage swings may be impressed upon the

grid without the latter becoming positive with respect to the filament. If the UV203-A should stop oscillating or lose its negative bias, the plate current would not greatly exceed its normal value when oscillating because of the high plate resistance value. This is of great importance, because the inherent characteristic of the tube is a protection against any plate current overload. On the other hand, in the case of the UV211, the plate current at zero grid would increase rapidly to an extent that would injure the tube by overheating the plate, because of the low plate resistance of this tube.

A comparison of conditions brings out the fact that in these two 50-watt tubes, the one having the lower amplification constant will give a slightly better mutual conductance. The UV203-A, at a normal plate voltage of 1000 and zero grid voltage, has a plate resistance of 5000 ohms, and an amplification constant of 25. The UV211, when operated at the same plate and zero grid potentials, has a plate resistance of 1900 ohms and an amplification constant of 12.

The mechanical construction of the 50-watt and 7.5-watt tubes is similar, in that the electrodes are fastened at the upper end of the supporting rod. The plate is mounted on four separate rods embedded in the glass stem. Small helical springs support the filament and maintain a proper tension on the filament wire to protect it from shocks. In the smaller type of tubes the spring suspension is not necessary.

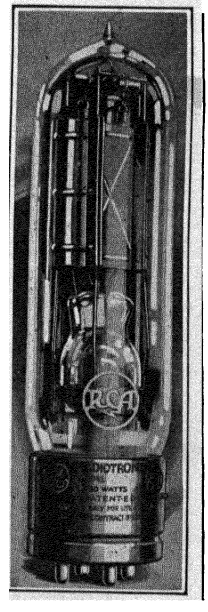

FIG. 177.—50-watt transmitting tube.

The 250-Watt Tube.—This tube, type UV204-A, has an output rating of 250 watts, and is the next larger transmitting type utilizing the X-L filament. The normal plate voltage is 2000 and the filament requires 11 volts and 3.85 amperes or 42.5 watts. The maximum plate power dissipation is 250 watts.

The emission of the thoriated filament is considerably high and reaches approximately 5 amperes at the rated filament e.m.f. of 11 volts. Because of this, the tube performs very efficiently in radio telephone circuits where the peak values of current, due to modulation, are considerable.

Several 250-watt tubes may be connected in parallel to give a greater output than one tube. The circuits pertaining to parallel arrangement are fully described elsewhere in this text.

The 1000-Watt Tube.—The next larger sized transmitting tube to

delivering high output without any increase in plate voltage is the type UV851 shown in Fig. 178. There are other tubes which we will not discuss at this time, such as the type UV206, of 1 kilowatt rating, requiring a plate voltage of 10,000 volts or higher. The maximum plate power dissipation of the UV851 is 750 watts when the tube is employed as an oscillator. The normal plate potential is 2000 volts; the filament requires 15.5 amperes at an input of 11 volts, equaling a power consumption of 170 watts. The electron emission approximately is 20 amperes. This tube, under certain conditions, is capable of giving a radio-frequency output of 1 kilowatt or more.

To give a comparison of the efficiency of a thorium filament and a

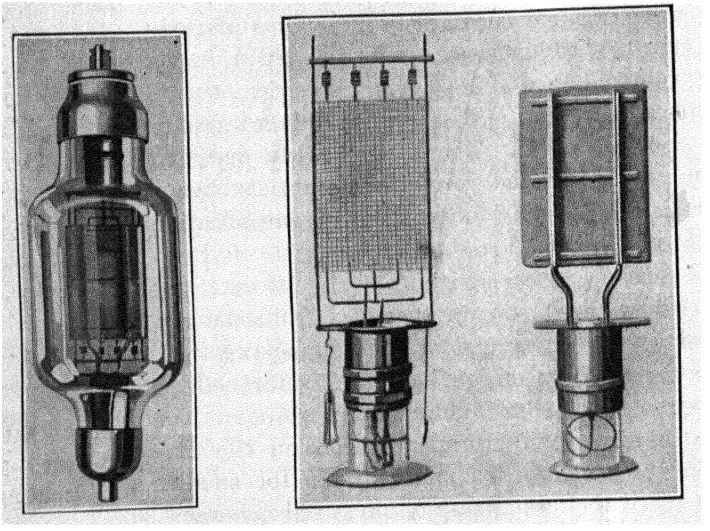

FIG. 178.—1000-watt transmitting tube. Views show construction of spring supporting filaments and grid mesh assembly.

pure tungsten filament: the X-L filament of the UV851 requires only a power consumption of 170 watts for a total electron emission of approximately 20 amperes, whereas a pure tungsten filament would require at least 600 watts to obtain an equal electron emission. Considerable overheating would result, because this additional power would have to be dissipated by the plate.

There are four parallel filaments used, and the grid is different than the ordinary tube in mechanical construction, being made of a heavy square mesh of molybdenum wire. The frame of the grid is anchored to the plate structure with an insulator to hold the grid in proper position with respect to the plate. Narrow wings on the plate assist in

radiating the heat developed at this point. Four helical springs support the four filament wires, thus maintaining the proper tension.

The foregoing summary of vacuum tubes does not include descriptions of all that have been manufactured with X-L filaments.

Oscillator *vs.* Modulator Tube.—The use of the vacuum tube characteristic curves illustrated for the various power tubes which we have described indicates that in each case the curve is nearly a straight line. In the Heising system of modulation the plate voltage variations impressed on a tube functioning as an oscillator are practically proportional to the voltage applied to the modulator grid. This is based on the assumption that constant current is being supplied to both the oscillator and modulator at all times, because of the action of the modulation choke coil connected in the common high voltage supply lead.

It must be considered that the modulation plate reactor, commonly known as a choke coil, has an infinite inductance for audio-frequency current changes. The tubes give an undistorted output and are especially suited for broadcasting speech and music.

The 20-Kilowatt Water-cooled Transmitting Tube.—One of the largest of the family of vacuum tubes is illustrated in Fig. 179. This water-cooled tube, type UV207, is rated at 20 kilowatts.

The tube will operate in any of the regular types of oscillating circuits, and is adaptable for either broadcast or telegraphic transmission. The characteristic action of the tube when functioning either as an oscillator or as a power amplifier is similar to a lower powered tube when used in a like manner.

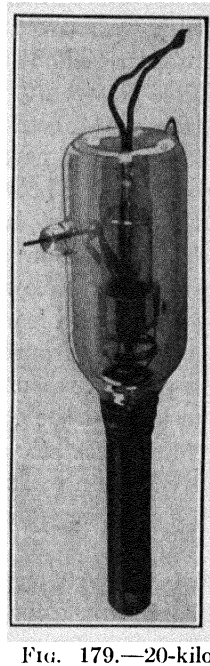

FIG. 179.—20-kilowatt water-cooled transmitting tube, type UV207.

The condensers and inductances employed in the circuits will naturally be huge affairs physically, but of no greater electrical dimensions than a much smaller piece of apparatus used as circuit elements.

The following ratings will convey an idea of the tremendous power this tube will handle. The plate potential is 15,000 volts; the filament current 52 amperes and filament voltage 22 volts; and the plate current, when oscillating, 2 amperes. The radio-frequency oscillating current in the grid circuit is never permitted to exceed 30 amperes, while the grid d-c. current is kept at about 100 milliamperes.

The heat generated by the plate or anode (which is the long metal

cylinder at the bottom in the photograph) is extracted by inserting the anode in a water-cooled jacket. A flange, not shown, is screwed to the threaded portion of the anode so that when the anode is in position within the water jacket (not shown) the joint at the top may be made watertight. The space between the anode and the inside of the jacket should be of sufficient distance to allow a column of water to circulate around the copper anode. The water flow from the cooling coils is about 2 or 3 gallons per minute, and an interlock or circuit breaker between the water-circulating system and the electrical circuits is set to open if the water supply fails for any reason.

Because the anode is at such a high potential and in direct contact with the water, many feet of rubber hose are used in place of metal tubing. The rubber hose is necessary to insulate or build up the resistance between the metal coils of the cooling system and the ground. A transmitter could employ more than one tube of this kind, in which case it would be necessary to provide suitable insulation by means of the rubber hose between the different jackets, besides increasing the size of the water-supply tank. The water circulation is maintained by electrically driven centrifugal pumps.

Observe how the two filament leads are brought out at the top and the grid lead through the glass envelope at the center. The external wiring from the transmitter circuits connecting to the electrodes is kept at a reasonably safe distance from the glass part of the tube, in order that the glass, being a dielectric material, will not be placed under an electrostatic strain. Such strains are apt to puncture the comparatively thin walls of the glass envelope.

The frequency of such a large tube when oscillating may be maintained to within a very few degrees of the assigned frequency by means of a quartz crystal. The vibrating quartz oscillator crystal circuit supplies the initial oscillating current, after which it is stepped up in strength, by means of several intermediate stages of amplification, to a suitable value for introduction into the grid circuit of this 20-kw. tube.

Measuring Vacuum Tube Characteristics.—The following worked-out examples may be helpful in understanding how the static characteristics of a tube are measured. It has been shown that any change in the voltages applied to any one of the three elements of a vacuum tube, the filament, the grid and the plate, will cause current flowing in the plate circuit to undergo a wide fluctuation of changes.

In order to compare different tubes operating under exactly similar conditions, there are several constants by which the tubes are measured. These constants do not tell how efficiently a vacuum tube will perform

in a particular circuit, but they do enable us to provide a simple means for determining the characteristics.

Amplification Factor.—Either a change of grid or plate potential will have an effect upon the plate current, but, of the two, we know that the grid is relatively far more sensitive in controlling plate current. The amplification factor is defined as the ratio of the change in plate potential to the change in grid potential which produces the same effect in plate current. For example, in Fig. 154 there are shown three characteristic curves of the same vacuum tube, one at 135 volts on the plate, one at 90 volts and one at 45 volts. The first curve shows that with zero potential on the grid, the normal plate current was 12 m.a., with a plate potential of 135 volts, and the second curve indicates a current of 7.0 m.a. with the plate at 90 volts. For the third curve, by reducing the plate voltage from 90 to 45, the current in the plate circuit lowered from 7.0 m.a. to 2.0 m.a.; that is, a difference of 45 volts on the plate caused a reduction of plate current of 5.0 m.a.

Looking at the graph, it can be seen, with the plate held at 135 volts, that a negative bias on the grid of 5 volts will lower the plate current from 12.0 m.a. to 7.0 m.a. It requires only 5 volts of grid potential E_g to make the same plate current change that would be caused by a difference of 45 volts on the plate, E_p.

The amplification factor is the ratio of this difference, and is expressed as follows:

$$\text{Amplification factor (Mu)} = \frac{E_p}{E_g} = \frac{135 - 90}{5 - 0} = \frac{45}{5} = 9.$$

The amplification factor under the above conditions is 9.

Another factor of importance is the plate impedance R_p. It represents the ratio between the change in plate voltage and the resultant change in plate current under the conditions of a constant grid potential.

Referring to the graph in the case where the plate voltage E_p was lowered from 135 to 90, it was found that the plate current I_p, lowered from 12.0 to 7.0 m.a., and these values substituted in the following equation will determine the plate impedance, or 9000 ohms, after first converting milliamperes to amperes.

$$\text{Plate impedance } R_p = \frac{E_p}{I_p} = \frac{135 - 90}{0.012 - 0.007} = \frac{45}{0.005} = 9000 \text{ ohms.}$$

Mutual Conductance.—There is a certain relationship between the plate current and grid voltage, as can be seen by the above two factors. This relationship may be defined as the mutual conductance, or where the quotient of the change in plate current divided by the change in

grid voltage produces the change in question in the plate current, under the condition of constant plate potential.

Conductance is the opposite of resistance. The unit of resistance is the *ohm* and conductance the *mho*. The unit ordinarily used in vacuum tube measurements is the micromho. Mutual conductance is the ratio of the amplification factor and the plate impedance. A vacuum tube rated in mutual conductance more nearly conveys the actual operating conditions of the tube where the effectiveness of the elements is brought into play.

Refer once more to the graph, Fig. 154. A reduction of plate voltage from 90 to 45 lowered the plate current from 7.0 to 2.0 m.a., that is, a 45-volt plate change caused a 5.0 m.a. current change. It can be observed also on the graph that, to obtain a similar 5.0 m.a. plate current reduction, a negative grid bias of 5 volts would be required.

Multiply the change in plate current by 1000, and divide by the required negative grid voltage. The result will equal the mutual conductance as follows:

Mutual conductance is ratio of

$$\frac{\text{amplification factor (mu)}}{R_P \text{ (plate impedance)}}$$

$$90V - 45V = 45V.$$

This plate voltage change of 45 volts causes the following current change: 7.0 m.a. − 2.0 m.a. = 5.0 m.a.

5 volts grid − zero grid volts = 5 volts grid.

This grid voltage change also causes a current change of 5.0 m.a. similar to that caused by the plate change just mentioned. Multiply this change in plate current by 1000, or $5 \times 1000 = 5000$, and divide by the required negative grid voltage or $\frac{5000}{5} = 1000$ micromhos.

This is the mutual conductance for this particular tube at 90 volts and zero grid; that is, at the indicated " B " and " C " voltages.

The mutual conductance of a tube is a good indication of the efficiency of the tube as an amplifier, in that it is dependent upon the effect of the applied grid voltage upon the plate current, and the greater the change in plate current for any value of applied grid voltage, the mutual conductance of the tube will be increased.

By referring to the characteristic vacuum tube table in the Appendix it is seen that for the UX171 power amplifier tube operated at 90 volts " B " and 16.5 volts " C " grid bias, the mutual conductance is

1200 micromhos. This factor was obtained in a manner similar to the method just described.

It should also be observed that for any change in either grid voltage or plate voltage applied to the same tube the mutual conductance will vary; for instance, the same UX171 tube at 180 volts " B " and 40.5 volts "– C " will have a mutual conductance of 1500 micromhos. This is mentioned to indicate that the mutual conductance can be expressed only as a factor for one set of conditions.

High Mu.—" Mu " is the symbol for voltage amplification constant. In the foregoing discussion we cited a practical example of a tube having an amplification factor of 9. It should be clear that by increasing the space between the plate and grid with respect to the filament, it would require greater potentials applied to the elements to obtain similar plate current changes than when the elements are spaced closer together. Tubes of this type operating at the higher voltages are grouped under the classification of power amplifier tubes. Some have an amplification factor of 30 or more. The object of building a high *Mu* tube is so that the tube may operate to deliver large undistorted plate output currents which carry speech and music frequencies. Reasons for using a power tube are given elsewhere in this chapter dealing with the input voltages applied to the grid.

High *Mu* simply means a large amplification factor.

Vacuum Tube Voltmeter.—A vacuum tube may serve as a voltmeter because any variation in potential applied to the grid causes a corresponding change in plate current. The actual voltage on the grid is not measured, but the plate current reading will give a comparative indication of the magnitude of the grid voltage changes. By arranging suitable resistances in the plate circuit and calibrating the plate current meter scale to read normally at zero when the tube is actually passing current, but working at a point where no distortion occurs (that is, when the tube is operated fundamentally as an amplifier), comparative tests can be made between different devices or circuits connected to the grid. The grid of the tube consumes very little current and does not act as a load on the circuit under measurement, as would an ordinary voltmeter. Hence, the tube makes an excellent measuring instrument, but its use is limited by the amount of input voltage the grid will carry without distorting the output.

CHAPTER XII

RECEIVING CIRCUITS—THEORY AND PRACTICE

THE function of the receiving antenna is to absorb a portion of the energy in a passing electric wave radiated by a distant transmitting station. Oscillating currents flowing in an open oscillatory circuit, such as an antenna system of a transmitter, possess the property of setting up an electric wave motion through space. The electromagnetic waves will induce an alternating electromotive force between the elevated portion and ground system formed by the conducting wires of any antenna which may lie in their path, and, in consequence, radio-frequency oscillations will traverse the receiving antenna. A loop antenna will act in a like manner. Suitable receiving apparatus must be devised to convert the oscillating currents induced in the antenna by the passing wave into either visible or audible signals.

Meaning of " Visible " and " Audible " in Radio.—The expressions *visible* and *audible* are used advisedly, because for many years it was the custom to think of radio reception only in terms of the small varying currents in the circuits of the receiver being changed into sound waves either by means of the telephone receivers or loudspeaker. The fact is that these same currents are made to actuate a sort of relay device used in high-speed commercial oceanic transmission to record the characters of the code on a paper tape giving a permanent copy of the message to be read at any convenient time after reception. This is the visual recording of the message through a process which is mainly a mechanical one. The more recently developed art of radiophotograph transmission and reception comes closer to being a visual reproduction, but only in actual television will we find the true exemplification of the word *visual*. Then moving objects and scenes originating at some far-distant location will be instantly reproduced before our eyes upon a suitable screen.

Radiophotography has already reached a satisfactory stage and picture broadcasts, or image transmissions, are being added to broadcast programs and used commercially. Picture broadcast is a little more simple of achievement than television, because the former requires only a source of sensitive light variations and the varying current pro-

duced therefrom can be made to trace out the original image slowly at the receiving end. The whole picture is not formed in a small fraction of a second, but is accomplished by the gradual building up of a still picture produced from an electrical current which at all times is proportional in intensity to the varying shades of light and dark in a film which is being slowly moved transversely across a constant beam of light. This would not be the case in television, because there it requires about sixteen *still* pictures flashed on a screen every second to produce the effect of a motion picture.

The transmitter radiates these current changes as it would current changes from a speech signal. The receiver is tuned and the high frequency energy is passed through the detector in exactly the same manner as a telegraph or speech signal. We could listen to the sounds produced by the current changes from the picture broadcast by attaching a loudspeaker to the output of the receiver, but the sounds would not be intelligible. If these currents are passed through a special attachment, substituted in place of the loudspeaker, they will be converted back into beams of light of proportional intensity that would act on an ordinary sensitized film which is also slowly moved in synchronism with the original film so that all portions of the surface are eventually acted upon. Transmission of each picture takes several minutes, depending upon its size, because a certain proportion of the total area of the film must be acted on in order to give good definition to the reproduction of the original.

Mention is made here of radiophotography and television because emphasis is given to the fact that once the principles of radio reception and transmission are fully understood, there will be no hesitancy in appreciating new developments in the uses to which a *varying current* may be put, after it is once received, to operate devices of various descriptions that may be attached to the receiver.

Propagation of Radio Waves and Their Relation to a Receiving Antenna Circuit.—It is not known precisely what constitutes space, but it is thought that the disturbance set up in the electric field surrounding an antenna in which oscillatory currents are flowing will produce an electric wave composed of an electrostatic field, and an electromagnetic field, moving at right angles to each other, which is propagated through space with the speed of light. The speed of propagation of radio waves is given as 299,820,000 meters per second, but is more generally referred to in round numbers as 300,000,000 meters or 186,000 miles.

Due to the phenomenon of induction, it appears that a maximum radio power would be picked up from a passing wave if the receiving

antenna was constructed with its conducting wires occupying a position part horizontal and part vertical. Also, in addition to induction, the phenomenon of resonance is used to increase materially the effects of the radio wave when it strikes the receiving antenna.

The wave radiated from a transmitting station has a definite frequency of motion which is the same as the frequency of the oscillating currents which produced it. In order that the receiving antenna will not impede or oppose the flow of current induced in it by the wave the frequency of the antenna circuit must be the same as that of the oscillating currents. In effect, the frequency of the receiving antenna must correspond to that of the transmitting antenna. The necessity for electrical resonance between circuits in which radio-frequency oscillations are transferred from one circuit to another circuit by electromagnetic induction has been explained in other chapters.

It is equally important that two open oscillatory circuits, or antenna systems, be adjusted to resonance as two closed oscillatory circuits. Whether two resonant circuits are located with miles of space intervening, or whether two such circuits are closely related, within perhaps a fraction of an inch or two, the principles of induction will be similar. The net result in either case is practically the same, for an alternating current will oscillate in the circuits receiving the induced energy at a frequency similar to the currents in the exciting circuit which produces the power. The difference is mainly in the magnitude of energies in the respective circuits. In the case of two oscillatory systems separated by great distances a large power is required to effect the transmission of radio waves, with only very minute currents intercepted by the receiving antenna circuit.

It is apparent that the receiving antenna must be in resonance or in tune with the wave to be received, which means that the frequency of the antenna circuit must be the same as the oscillating currents induced in the antenna by the passing wave.

To bring about this condition of resonance, the first essential of a receiver is to provide variable elements by means of which the antenna can be tuned to the desired wavelength. We may speak of currents oscillating at radio-frequency either in terms of *frequency* or *wavelength* of the radiated wave. It has become quite customary to speak of the wavelength of a receiving antenna circuit; meaning, of course, that the circuit is adjusted to receive maximum energy from a wave radiating at the wavelength so designated.

Only when the distant transmitting circuit and the receiving antenna circuit are in tune will the induced oscillating currents attain their maximum amplitude. For any change of adjustment which will place

the receiving circuit out of tune with the incoming wave, the strength of the induced currents will be correspondingly less, depending upon the amount of detuning, or the degree to which the circuit has been made non-resonant.

A resonant condition is one where the circuit possesses zero reactance; that is, each alternation (half-cycle) of a passing wave builds up the highest possible current flow in the receiver antenna before the next alternation (half-cycle) of the wave acts upon the antenna. Under a condition of dissonance, i.e., non-resonance, between the transmitting and receiving antennas, the receiving antenna circuits would oppose the maximum induction of current, because the reactance of the circuit would not permit the alternating currents to flow freely through the circuit in a given specified time. Each cycle of induced energy takes place in a fraction of a second determined by the frequency of the radiated wave.

The frequency of the incoming signal wave is determined by the distant transmitter. The observer at the receiving end has no control over this factor of time, but of necessity must adjust the receiving circuits so they will offer a minimum opposition (impedance) to this induced current which rapidly flows through the circuit and reverses its direction of flow at every alternation (half-cycle).

The oscillating period (natural wavelength) of the receiving antenna must be artificially increased and decreased to resonate the antenna system with the frequency of the incoming signal wave.

This may be accomplished by inserting a variable inductance (coil) in series with the antenna. Or, a variable condenser may be inserted in series with the inductance in the antenna, and in receivers designed for very long waves a second inductance (coil) may be included, also to be connected in series with the antenna.

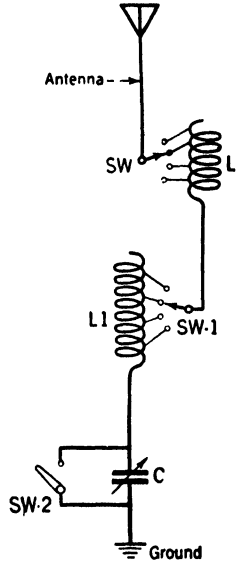

FIG. 180.—One type of an antenna system of a receiving circuit.

The tuning elements are illustrated in Fig. 180, inserted between the antenna and ground connections of the receiver, and comprise:

(1) Inductance L_1 can be varied by means of switch SW_1 and more or fewer turns of wire can be included in the antenna circuit. Inductance L_1 is called the *antenna tuning inductance.*

(2) Variable condenser C is provided with a short-circuiting switch

SW_2. This condenser makes it possible to receive waves which are shorter than the fundamental (natural) wave of the receiver antenna. Condenser C is called the *antenna tuning condenser*. It may also be called a *short wave condenser*, or *antenna series condenser*.

(3) Inductance L is used only to increase the wavelength of the antenna beyond that range which is afforded by inductance L_1, to receive the very long waves. It is not advisable to include the inductance of L_1 with L in the same unit, or same piece of apparatus, because it will be shown later that inductance L_1 not only serves to tune the antenna to a definite wavelength, but this inductance is also utilized to transfer the oscillating currents induced in the antenna to a local receiving circuit, to be translated by some suitable indicating device into intelligible signals. Inductance L is called the *loading inductance* because it places a large amount of concentrated inductance in the antenna. Naturally this is required to make the receiver responsive to waves very much longer than the fundamental wavelength of the antenna.

It is to be noted that the receiving antenna is similar in electrical characteristics to that of the transmitting antenna, in that the loading inductance increases the fundamental period of oscillation and makes the system responsive to long waves, whereas the short-wave condenser may be employed to decrease the fundamental period, making the antenna sensitive to signals having wavelengths less than the fundamental. This arrangement permits inductance L_1 to be adjusted independently when this coil is used to couple the antenna circuit to the tuned circuits of the receiving set.

If the receiver is designed to cover a wave band of limited range, the loaded inductance and short-wave condenser may be omitted from the circuit, with only inductance L_1 to provide the necessary regulation of wavelength.

The frequency of the receiving system is determined by the values of inductance included in L alone, or when L and L_1 are both used, and the capacity of variable condenser C. This frequency may be altered by a close and continuous variation of the adjustments provided with the tuning elements over certain predetermined limits or a band of wavelengths.

Adjustments of the Antenna Circuit.—The antenna circuit is adjusted to the required wavelength in the following ways:

(1) If the wavelength of the signal to be received is shorter than the natural or *fundamental* wavelength of the antenna, we would cut out all of inductance L, the loading coil, by means of the switch SW and then open switch SW_2 to cut in the capacity of condenser C. Now reduce inductance at L_1 by cutting out turns with switch SW_1 and this, we

know, will reduce the wavelength. Always retain sufficient inductance in this coil to produce a strong magnetic field around it to be utilized for transferring energy from L_1 to the receiver circuits which will be shown later.

Placing condenser C in the circuit in series with the antenna and ground reduces the capacity of the circuit in the same manner that the capacity of any oscillatory circuit is reduced when two condensers are connected in series. The resultant capacity is always less than the capacity of the smallest condenser. This is easy to understand if we consider that the distributed capacity between antenna and ground forms an effective condenser of a definite size, and the variable condenser C is really placed in series with the antenna capacity. After lowering the wavelength in this manner the value of capacity in condenser C is either increased or decreased, as the case may be, until the exact wavelength is obtained.

(2) If, on the other hand, the wavelength of the signal is longer than the natural wavelength of the antenna, the series condenser must be cut out of the circuit by closing switch SW_2, and then increasing the inductance of the circuit by adding turns of wire at inductance L_1 by manipulating switch SW_1. As previously stated, it may also be necessary to add inductance at the loading coil L on the very long waves.

Two important facts have been established concerning the tuning of the receiving circuits:

(1) Increasing inductance or capacity or both will increase the wavelength and decrease the frequency.

(2) Decreasing the amount of inductance or capacity or both used will lower the wavelength and increase the frequency.

Tuning Elements.—The prime difference between the tuning elements of a transmitting antenna and a receiving antenna lies in the contrast of the physical dimensions and construction of coils and condensers, for equal values of inductance and capacity, respectively. The electrical values are known as the constants of the circuit.

The inductances employed in the circuits of transmitters consist of either solid copper wire or tubing wound in the form of a cylinder or helix. Other coils consist of a flat spiral of copper ribbon placed edgewise and are generally known as the pancake type. In either type it is desirable to provide a continuous variation of the inductance by means of a sliding clip, so that the turns of wire can be gone over inch by inch. The adjacent turns are well insulated from one another and separated by various distances approximating one-half to one inch to prevent sparking between them due to the high voltages impressed across the winding.

The transmitting condensers are also built very ruggedly to withstand rupture and breakdown due to the high potential surges in the system. The mica and foil moulded type condenser is gradually replacing all other types. It consists of a thousand or more alternate thin sheets of mica and foil placed in an aluminum casing. A high-voltage condenser of this type, having a capacitance of the order of 0.002 microfarad is generally about six or eight times as large in physical dimensions as a variable air-type receiving condenser with a similar capacitance rating. These preliminary facts are given to show that while tuning appliances used in a transmitter and receiver function alike in providing the desired wavelength or frequency and also, the individual inductances and condensers in either equipment may have equal electrical values, yet the receiving apparatus will be much smaller and of more delicate construction. This is accountable, of course, owing to the extremely low voltages induced in the circuits of the receiver.

The variable air-type condenser employed in practically all of the present-day receivers for tuning purposes consists of a number of semi-circular metal plates connected together, and held rigidly parallel to one another by means of spacers which also provide sufficient separation to allow a second set of metal plates to pass in between them. The second set is mounted on a shaft which permits one set to revolve within the other. The air between the fixed plates (stationary plates) and the movable plates (rotor plates) acts as the dielectric.

When the movable (rotor) plates are rotated until they occupy a position entirely within the stationary (stator) plates the capacity of the condenser is at its maximum. On the other hand, when the rotor plates are turned or moved out of effective relationship with the stator plates, that is, when no part of the surface of either set occupies a position under another, the capacity of the condenser is at minimum. An indicator pointer is attached to the rotor plates. If the pointer is moved across a scale, calibrated in degrees, or directly in kilocycles, its position will denote the effective relationship of the plates, thus indicating the proportional change in capacity values for all intermediate positions between minimum and maximum.

The capacity of a variable condenser for receiving purposes rarely exceeds 0.0015 microfarad, more common values being about 0.001 mfd., 0.0005 mfd., and 0.00035 mfd.

The condenser plates are usually made of either copper or aluminum stampings and must be of a low resistance material. The resistance of the plates, together with any resistance at the plate joints and pig-tail connections, will have the same effect as would a similar amount of

resistance inserted in series with the condenser capacity. This is spoken of as the *series resistance* of a condenser and it must be kept at a minimum by careful design and assembly of the condenser.

The receiver antenna tuning inductance may consist of a single layer solenoid winding, tapped at intervals along the coil and connections brought to a tap switch, by which the inductance may be regulated. In some types of commercial receivers in present use on ships the antenna inductance is tapped every ten turns and leads brought to a *tens* switch. The first ten turns on the coil are tapped at every turn and leads brought to a *units* switch. This gives a close variation of inductance by correct amounts of turns in steps of ten and single turns. For example, if ten turns are cut in at the *tens* switch and one turn is cut in at the *units* switch, the circuit will include eleven turns.

The present-day broadcast receiver operating within the limited band of wavelengths allocated for that purpose does not usually provide for any variation of antenna inductance and depends only upon the adjustment of variable condensers in the tuned circuits which are connected to the antenna system to provide the necessary changes in wavelength. The antenna inductance is sometimes tapped, however, with leads brought to connections marked *long*, *medium* and *short* for the purpose of permitting one to find the best point for maximum signal current, according to the dimensions of the antenna used.

It is apparent that there are a great many varieties of construction placed upon tuning inductances, but in general the function and principles upon which they operate are the same as those outlined in this chapter.

Inductance in General.—There have been many and varied types of windings used for tuning inductances. The methods of winding all coils are intended to keep the distributed capacity to a minimum in order to increase the range over which any one coil may be used when tuned with a variable condenser having a specified capacitance. What is more important, the efficiency of the inductance is increased by keeping the dielectric losses to a minimum. The space separating adjacent turns acts as a dielectric and this self-capacity of the coil, with its inductance, forms a closed oscillatory circuit. Radio-frequency currents oscillating through such a circuit represent a loss due to the dissipation of part of the signal energy. Also, the self-inductance of the coil is altered as a consequence.

The self-supported type of coil, called the *honeycomb* or *duo-lateral* coil, reduces distributed capacity by a peculiar method of winding. The wires of alternate layers are not laid directly above one another,

but are so arranged that in alternate layers all parallel wires fall in between those of the preceding and following alternate layers. The turns of one layer cross those of the following layer at an angle, giving the finished coil a cellular appearance.

The self-capacity of a coil may also be minimized by employing the so-called *bank winding*. This winding differs essentially from a double-layer wound coil, the latter being wound first with one layer and the second layer wound back on top of the first layer, so that the first and last turns of the coil are adjacent. In the bank winding, instead of winding one layer complete, and then winding the next layer back over the first, as in the case just cited, one turn is wound successively in each of the layers, the winding proceeding from one end of the coil to the other.

Figure 181 shows how the bank-wound coil of two layers is constructed, the turns being indicated by numbers 1, 3, 2, 5, etc. The maximum difference in potential across three turns corresponds to the e.m.f. between adjacent turns. A threaded or grooved cylindrical insulated form is used to prevent the wire from slipping during the process of winding. It can be seen that by this method of winding the first and last turns are separated by a considerable distance—in fact, the full length of the coil.

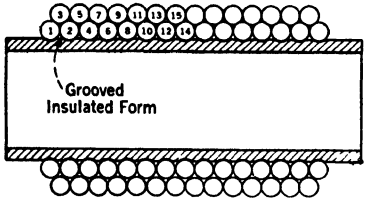

FIG. 181.—Bank-wound inductance used to reduce distributed capacity effects.

In the *double-layer-wound type* (not bank-wound) there is a high voltage between the turns of the two layers, for we know that the e.m.f. induced in a coil is dependent upon the voltage induced across one turn times the number of turns of wire.

In the commercial short and long-wave receivers the coils are generally bank-wound because of the large number of turns required to increase the inductance sufficiently to respond over the entire wavelength range of the receiver.

For the reception of signals in the wavelength range, beginning at about 1000 meters and extending down to 200 meters, or a little less, *the single-layer-wound coil* has become the standard form of inductance. The conductors or turns are wound in a continuous layer on an insulated cylindrical form having a specified diameter and length. A coil of this kind is also known as the solenoid type.

The pitch of the turns governs the number of turns that can be wound in a given length. To reduce the effects of distributed capacity, especially at the lower waves, or the high frequencies, the turns may

be space wound. The pitch of the wire determines the spacing and this may be controlled by grooving the tubing and laying the wire in these grooves. The winding is sometimes secured in place by dipping or spraying the completed coil with a lacquer composition. A coil wound on a rigid form possesses a greater constancy of inductance than one of the self-supported type, because the latter does not maintain an accurate inductance value after being subjected to ordinary mechanical stresses.

The inductances in short-wave circuits operating below perhaps 200 meters are of the solenoid type, but generally they are not wound on a solid insulated tubing form. The coils are sometimes made up without tubing by the use of a very heavy solid copper wire or ribbon wire wound edgewise to secure the proper rigidity to maintain its shape under mechanical stresses; or a smaller-sized wire may be used and wound on a notched form with the conductors supported only at intervals; or the conductors may be held in position by thin strips of insulator material.

Radio-frequency coils may be wound in the manner as shown in Fig. 182. While this coil is a single-layer-wound inductance the turns do not begin at one end of the form and finish at the opposite end. It can be observed that this unit is a transformer consisting of two separate windings. Let us consider only the secondary winding; the first half is wound beginning at *A* in the direction indicated by the arrows, and finishes at *E*. A splice is made at *E* and the second half is wound toward the first half, but in the opposite direction as indicated by the arrows. This is called *astatic winding*. In certain types of receivers, radio-frequency transformers and oscillator coupling coils are wound astatically to prevent electrostatic coupling. This reduces induction from other parts of the circuit.

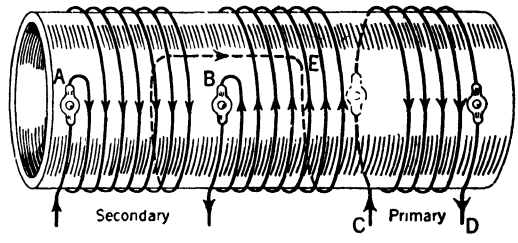

FIG. 182.—A method of constructing an astatically wound transformer.

For radio-frequency circuits iron cores are not used in inductances. The iron would tend to set up its own magnetic flux, thus increasing the inductive reactance of the coil for the very high frequencies. This added reactance opposition would not permit the rapidly reversing currents to reach a maximum value at each alternation. The loss in radio signal power increases with the frequency. Iron is sometimes used as

a core in intermediate transformers and always in audio-frequency transformers.

It is now quite clear that all inductances (coils) possess three electrical properties: *inductance, resistance* of its conductors, and *capacitance* (distributed between the adjacent turns).

Tuning inductances vary in value from about 1 microhenry to 125 millihenrys. For example, a certain inductance having 3.0 millihenrys maximum inductance when used in conjunction with a variable tuning condenser having a maximum capacitance of 0.001 microfarad will cover an approximate range of 400 to 3000 meters. Another type coil of 0.040 millihenry, when shunted by a condenser of similar size, will respond to a wavelength range between 130 and 375 meters, approximately.

The Variometer.—A *variometer* is a device which may be inserted in an antenna to provide a close and continuous variation of the inductance. The variometer may be placed in series with the main tuning inductance to obtain fine tuning, which is not possible with main inductance. In some of the older type sets the variometer was often used as the only inductance. The antenna circuit may be tuned sharply to a given wavelength by the variometer because its construction permits a precise limited range of inductance variation.

The variometer consists of insulated wire wound on two tubes (or forms) of insulating material usually spherical in shape, one smaller and revolving within the other. In some types a space of approximately one-quarter inch is left in the middle of the windings to pass a shaft which is connected to the inner or rotor form. The same amount of wire is placed on the inner and outer form and the two coils are connected in series.

If the inner winding or rotor is turned so that the magnetic field which is produced about its turns, when current flows, is in such direction to the magnetic field produced about the fixed or stator coil that the fields aid, then the inductance of the two coils will be maximum. If the inner coil is now turned one-half revolution from the position where the two fields coincide to a position where the direction of the windings is not the same in the coils, the two magnetic fields will oppose or annul and the self-inductance of the coils will be minimum. The inductance of the variometer is thus changed throughout a continuous range, with the intermediate values depending upon the angular relation which the inner coil bears to the outer coil.

The variometer is extensively used as standard equipment in commercial tube transmitters for close tuning. The general construction of the variometer and principles of operation will be found alike, whether

used in the receiver or transmitter circuits, excepting only that when employed in the transmitter this device is somewhat larger in physical dimensions and more rugged in design. The photographs in the section of the text describing the commercial tube transmitters show clearly the customary design of a variometer.

Elementary Functioning of a Transmitter.—A brief summary follows telling what the student should know concerning the entire process involved in the induction of oscillating currents in a receiver antenna, starting at the transmitting apparatus. The following brief explanation is presented solely for the purpose of enabling the student to better understand the principles underlying reception. The explanation is simplified by employing in this description the action of a spark transmitter.

(*a*) Power for the d-c. motor of the transmitter is drawn from the ship's direct current generator, usually 110 volts. The d-c. motor drives an alternating current generator which produces an alternating voltage of 100 volts a-c. or more and at a frequency which is usually 500 cycles in the modern spark transmitter.

(*b*) The adjacent field poles on the a-c. generator are of opposite polarity. As the armature coils rotate past the poles an alternation of the e.m.f. is induced in the coils first in one direction and then in the opposite direction while passing successively through the magnetic fields produced by each pole. One cycle consists of two alternations; therefore, the frequency will depend upon the speed of rotation and the number of field poles divided by two.

(*c*) The Morse hand key which forms the dots and dashes is connected in the circuit of the generator armature. When the key is closed alternating current will flow through the primary winding of the step-up power transformer.

(*d*) By the action of the transformer the low voltage a-c. is raised (stepped-up) in value to an e.m.f. ranging from 7000 volts a-c. and upward in the secondary winding, but at the same frequency as the generated current. The secondary potential rarely exceeds 15,000 volts under normal operation.

(*e*) The high potential condensers are charged to maximum voltage at each alternation of the charging current, when either a quenched type or synchronous rotary-type gap is used. In the case of a 500-cycle charging current the condensers are charged 1000 times per second.

(*f*) The condensers upon reaching their peak voltage immediately discharge across the gap and through the primary of the oscillation transformer. Each discharge consists of a train of a number of high frequency oscillations which diminish in amplitude and rapidly die out.

The oscillations flowing in the primary or closed circuit are not constant in amplitude, for the strength of the energy in each successive oscillation decreases. The oscillations produced by the spark discharge of the condenser are called *damped oscillations.* One train or group of damped oscillations is produced for each spark discharge. Hence, the frequency at which the groups or trains occur is equal in number to the alternations of the generator, when employing either type of gap stated in paragraph (*e*). However, the frequency of the individual oscillations which comprise the damped wave trains is determined by the inductance and capacity of the closed circuit.

(*g*) The trains of damped oscillations flowing in the closed circuit produce an alternating magnetic field which surrounds the primary inductance of the oscillation transformer. By the phenomenon of electromagnetic induction, oscillations are induced in the secondary, which is part of the antenna or open circuit.

(*h*) The oscillations flowing in the antenna will cause a large electric field to be created around the antenna. Energy in the oscillations will radiate in part in the form of an electric wave motion. The length of a single wave is equal to the velocity of the wave motion per second (300,000,000 meters) divided by the number of waves that would be produced in one second. This means the number or *rate* of production per second and not the actual number that occur. One group or one-wave train might consist of 25 to 100 complete damped oscillations. During an interval of a fraction of a second, while the condensers are charging, no oscillations are produced. Successive spark discharges will cause the antenna system to be set into oscillation and groups of *damped waves* will be radiated (see Fig. 185).

(*i*) If the receiving antenna is adjusted to electrical resonance with the oscillations in the transmitter antenna, both having the same wavelength, the advancing wave motion in space will induce in the receiving antenna groups of damped oscillations flowing at the same frequency. In this case 1000 groups of damped radio-frequency oscillations will flow in the receiving antenna, and the frequency of each oscillation will be determined, as stated before, by the inductance and capacity values of the sending antenna system.

(*j*) By appropriate devices in the receiver the presence of the oscillating currents can be detected and made to operate a sound-making instrument, such as a telephone receiver.

There are two general types of transmitters: (1) those which generate and radiate *damped waves*; and (2) those which generate and radiate *undamped* or *continuous waves.* There are two general types of receivers in use for damped and undamped waves. It will be ex-

plained later that some types of receiving circuits are designed to permit reception of the signals from either type of transmitter.

Methods of Detecting Oscillating Currents.—There are two general types of detectors which are capable of altering the radio-frequency oscillations into currents suitable for operation of the indicating device, the telephone receivers.

The two classes of detectors are the *crystal rectifier* and the *three-element vacuum tube.*

Some types of crystals depend for their operation upon the principles of rectification, the crystals having the property of converting the radio-frequency oscillations into a *uni-directional* current. The crystal detectors of this type are very sensitive and function without the aid of a local battery, because they possess the inherent properties of uni-directional conductivity (rectification), which means that the crystal will permit a very large current flow in *one direction* and a very small current, or none at all, in the opposite direction.

Crystal detectors which function without local battery are: Galena, silicon, iron pyrites and zincite used with bornite. Galena is one of the most sensitive, being a natural crystal, sulphide of lead.

Other crystals operate on the principle of rectification combined with the ability of the received rectified currents to control the steady flow of current furnished by a local battery, and thereby produce a pulsating direct current to flow in the telephone receivers.

Crystal detectors which function with a local battery require the use of a potentiometer, to be explained later, and are: Carborundum, and sometimes zincite-bornite. Carborundum is considered one of the most reliable crystals having a fair degree of sensitivity. (Carborundum is a crystal manufactured by The Carborundum Company, and the name of the crystal is a registered trademark.)

There are a variety of crystal holders, one of which is shown in Fig. 183, where the crystal is mounted in a small cup made of brass with the crystal partly embedded in some soft metal such as Wood's metal. A fine spring wire mounted on a movable arm (ball and socket joint) enables light contact to be made on any part of the surface of the opposing crystal.

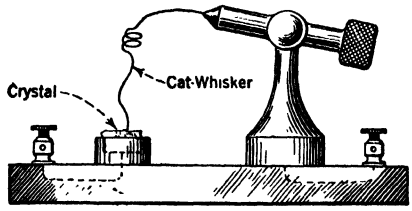

FIG. 183.—A mounted crystal detector.

The crystal detector can be employed in a receiving circuit to produce audible sounds in the telephones from oscillations induced in the antenna by *damped waves, modulated continuous waves* and *interrupted*

continuous waves (I.C.W.), but it will not respond to *continuous waves* (C.W.)

The crystal may be found in a few commercial receivers at the present time. It is included in the equipment mainly as an auxiliary detector in the event of a total breakdown of the vacuum tube, which has now practically superseded all other types of detectors. The crystal is often used in reflex receivers, because it gives a very natural and pleasing reproduction of the voice and music, but in general the crystals lack stability and requires frequent adjustment.

A Simple Receiver Employing a Crystal Detector.—The fundamental action involved in modern receiving equipment no doubt can be best explained by a simple receiving circuit consisting of: (1) an antenna; (2) a tuning inductance; (3) a crystal detector; (4) telephone receivers which produce audible sounds indicating the presence of the oscillations; (5) the ground. The arrangement of the apparatus is illustrated in Fig. 184.

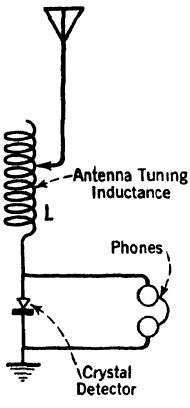

FIG. 184.—A simple radio receiving circuit.

Let the incoming oscillations impinged on the receiving antenna consist of wave trains, or groups of damped oscillations, shown in Fig. 185. Two groups of damped oscillations are shown in the upper curve *A*, consisting of only four oscillations each. There is an interval between the two groups. It must be kept in mind that from 25 to 100 oscillations may constitute a wave train. Only four oscillations per group are shown, to simplify the explanation.

We know that the induced currents are very feeble, and that the ordinary radio telephone receivers are very sensitive indicators of minute electric currents. So let us consider first why it is impracticable to place headphones in the antenna circuit to register high frequency currents. Due to the inertia of the telephone diaphragms by reason of their weight, mass and degree of flexibility, they will not respond to vibrations in excess of perhaps 15,000 cycles per second. In fact, even though the diaphragms might be capable of moving back and forth 10,000 times per second, the sound waves produced by their motion doubtless would be inaudible to the average human ear. For a 600-meter wave the oscillations flow at a frequency of 500,000 cycles per second, and for a wavelength of 300 meters, 1,000,000 cycles per second.

These physical limitations of both the human ear and the telephone diaphragms make it imperative to alter the radio-frequency current into

current which will flow at a low frequency, one within the range of audibility.

This action is called *detection* and the device necessary to convert the radio-frequency current is known as the *detector*. It might be said that neither a crystal nor a vacuum tube really detects, for both merely convert the radio-frequency energy into a form suitable to operate the indicating device. The telephone receivers connected in

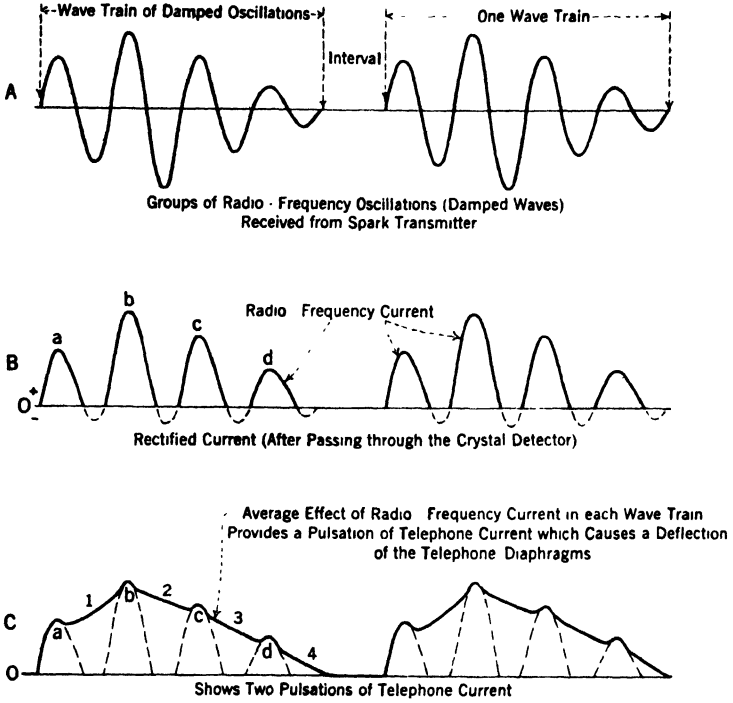

FIG. 185.—How a crystal detector serves to rectify a received radio signal, and the resultant effect produced on the telephone diaphragms.

series with the crystal really constitutes a detector. Likewise this is true of a vacuum tube and phones.

The action of the simple receiving circuit of Fig. 184 is as follows:

The crystal, owing to its properties of rectification, will offer a certain resistance to current flowing through in one direction, but a very much greater resistance to current which attemtps to flow in the other direction. Let us assume that the damped waves depicted in *A* of Fig. 185 strike the receiving antenna.

Suppose current during the positive half-cycle of one oscillation flows readily through the crystal and that this current passes from the

ground upward, then during the negative half-cycle it will be impeded by the high resistance of the crystal and very little or no current will flow. Then the positive alternations will traverse the complete antenna circuit to ground, whereas the negative alternations will be eliminated or cut off.

Hence, the rectified oscillations build up a charge on the antenna side of the crystal, which energy, at the termination of a wave-train group, leaks to the ground through the windings of the telephone receivers with impulsive effects.

The rectified current is shown by the curves in *B*, Fig. 185, consisting of uni-directional impulses of current. The diaphragms of the telephones cannot follow the individual pulsations *a*, *b*, *c* and *d*, but they will respond to the average change in current which these pulsations represent. The average change is shown by the heavy curved line in curve *C*, when the telephones are shunted by a fixed condenser, to be explained later. The group of pulsations from *a* to *d* will build up the current in the magnet coils of the telephones and this will attract the diaphragms. When the current falls to zero at the termination of each group, the diaphragms will be released and spring back to their normal positions, thus giving one deflection which creates one sound wave or click.

It has been shown that rectification of the radio-frequency oscillations or detection of the energy has actually occurred as evidenced by the audible sounds reproduced by the receivers.

One click will be heard for each group of oscillations received; therefore, if the distant spark transmitter is radiating 1000 groups per second, which is called the *group* or *spark frequency*, the diaphragms will be attracted to the electromagnets of the receivers 1000 times and we can detect the presence of the energy by the 1000-cycle note produced by the vibrating diaphragms.

The energy is received only when the key of the transmitter is depressed. Since the key is closed to form dots and dashes, the dashes being approximately three times as long as a dot, the series of rapid movements of the diaphragms will reproduce the dots and dashes, and thus convey the substance of the message transmitted in code form.

Crystal Detector Functioning with Local Battery.—It has been shown that the crystal possesses the property of uni-directional conductivity, because, as illustrated in *A* of Fig. 185 the radio-frequency oscillations produce substantially equal and opposite variations of potential across the detector during each half-cycle, although the current only flows through on either the positive or negative half-cycles, as the case may be, as shown by the pulsations of rectified current in curve *B*. The

lower dotted lines in curve *B* between *a*, *b*, *c*, and *d* indicate that a small current may pass in the direction of greatest opposition.

Certain types of crystals, such as galena and silicon, are highly sensitive to electrical oscillations and usually are delicate in holding a permanent adjustment. On the other hand, carborundum is less sensitive, but possesses a greater degree of stability. The latter type depends upon the combined effects of the energy in received oscillations and current supplied by a small local battery.

The application of a weak battery current to a carborundum crystal and telephones connected in series with the crystal circuit increases the intensity of the incoming signals when the current from the battery is closely regulated and flows through the crystal in a definite direction. In other words, the local battery current passing in the direction of negligible resistance and the pulsations of rectified current contribute a greater total current to actuate the telephone diaphragms.

Potentiometer.—The close regulation of the voltage applied to the crystal is accomplished by connecting a potentiometer, which is a variable resistance of about 500 ohms, in shunt to a battery of two dry cells. The telephone receivers and crystal and tuning inductance are connected in series. One lead of this circuit is then connected to one end of the potentiometer, and the other lead of the crystal circuit is connected to the arm of a sliding contact which may be moved across the resistance of the potentiometer. The *wire-wound* potentiometer consists of a resistance wire of high-grade nickel alloy. The resistance element may be made of graphite, used with a sliding contact of carbon to minimize wear to the resistance sector. The potentiometer is different in its application from the ordinary variable resistance, or rheostat, inasmuch as it is always shunted across the circuit whose potential it is desired to regulate. Refer to diagram of Fig. 186.

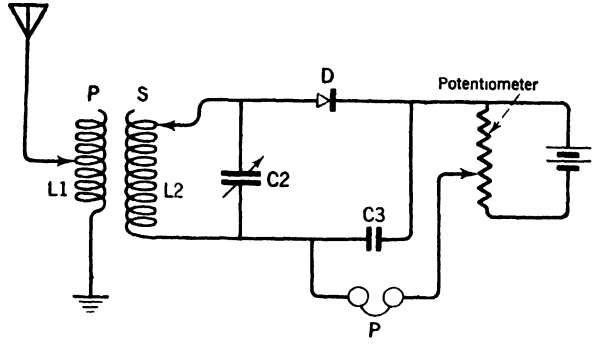

FIG. 186.—An inductively coupled receiver employing a crystal detector in conjunction with a local battery.

The voltage across the crystal circuit is then regulated to suit the particular crystal being used by moving the contact arm across the

potentiometer. The voltage across the entire potentiometer winding is equal to the two dry cells, or approximately 3 volts. The crystal circuit is shunted across only part of the total resistance. This is determined by the position of the sliding contact. Since in normal operation only a small polarizing e.m.f. of about 0.25 volt is required, the sliding contact will be in such position that only a small amount of the potentiometer resistance will be included across the crystal shunt circuit. Only a very weak current will flow steadily through the receivers. The leads connecting to the crystal must be reversed and alternately tried to determine the correct polarity wherein the local battery current will build up the strength of the incoming signal.

The potentiometer is really a voltage dividing device, because any desired voltage from minimum to maximum may be obtained and applied to the circuit connected between one end of the resistance and the moving arm. If the slider is at the end of the resistance where only a few turns of the resistance wire are included in the shunt crystal circuit, the voltage will be minimum, but if the arm is moved toward the opposite end, so that the shunt circuit is connected across a greater amount of the resistance wire, the voltage will increase. This follows the law of divided circuits, for which Ohm's Law is applicable. The voltage drop across a resistance is proportional to the size of the resistance and the strength of the current flowing through it

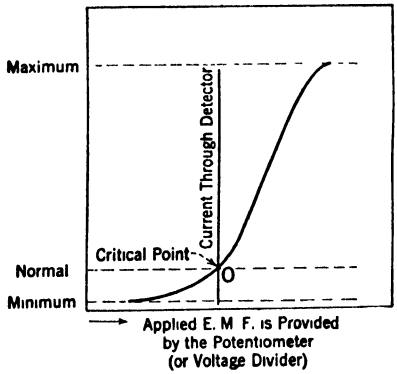

FIG. 187.—Showing that if a crystal detector is operated at a certain voltage supplied by a small battery then high values of signal current may be expected for a given incoming signal.

The *sensitive point* on the surface of the crystal where the rectifying properties will give the highest sensitivity is found by exploring the surface with a fine wire. Since no specific rule can be recommended for finding the sensitive spot, it must be determined by experiment in adjusting the wire, both for a given pressure and position, until a clear and loud signal is heard in the receivers.

Insofar as the conductivity of a crystal in a certain direction is concerned, it does not behave in the same way as the resistance of an ordinary conductor. If the e.m.f. applied to the carborundum crystal is made to vary from a low to a high voltage by moving the contact arm along the potentiometer, and if means are provided for measuring the current flow in the crystal circuit by inserting a sensitive milliam-

meter in series, it would be found that the current does not increase in direct proportion to the voltage increase. The current would rise in a characteristic manner as shown by the curve in Fig. 187, where at the lower voltages the current increases rather slowly, but when a critical point in the e.m.f. is reached the current begins to increase much more rapidly, designated by point *O*, and from then on maximum equal voltage increases will cause correspondingly larger increases in current.

The current change through the crystal does not act in accordance with Ohm's law, because the effective resistance of the crystal does not remain constant, but decreases in a non-proportional manner when the voltage across it is increased beyond a certain critical value. A crystal with a steep curve will give the loudest signals when the potentiometer is adjusted so that the normal flow of current through the crystal and telephone receivers corresponds to the critical point at the bend in the curve. The reason is that a very weak e.m.f. applied across the crystal by the oscillations of an incoming signal, assisted by the e.m.f. of the local battery, will produce a relatively large increase over the normal steady flow. Thus the rectified pulsations which actuate the telephone diaphragms will be of greater magnitude.

It is important that the reader should understand this action and observe particularly that the best *detection* is obtained when the crystal is operated at the critical bend in the characteristic curve. The curve is a graphic illustration of the current changes caused by voltage regulation across the potentiometer. It can now be seen that there is a great similarity between the crystal action when utilizing a potentiometer and the vacuum tube when employed as a detector, if both detectors are compared only insofar as the location of the working point on their respective characteristic curves is concerned. It will be noted that the vacuum tube detector is also operated in the region where its characteristic curve begins its sharp or abrupt increase. The working points here are compared only with reference to the critical operating characteristic *where a small cause will produce a large effect.*

When a crystal is used in this manner the incoming oscillations control the amount by which the local battery current is increased. The action is not alone one of rectification, but also corresponds to a relay.

When a steady direct current flows through the receivers no sound is produced, and to move the diaphragms it is necessary that the current be changed in strength to cause a change in flux around the magnet coils of the receivers, the loudness of the sound being governed by the amount of increase in the current. If the pulsations of telephone current, as shown in curve *C* of Fig. 185, could be enlarged a greater deflection of the diaphragms would be the result.

The principal advantage of the vacuum tube used as a detector, in contrast to the crystal, rests in the fact that the accuracy in assembly and design of the tube determines its *detecting* qualities, whereas the characteristics of the crystal cannot be improved because these properties are inherent in the substance.

In practical operation the resistance of a crystal, when inserted in the antenna, would impede the free movement of the radio-frequency oscillations and the resonant tuning qualities of the antenna would be affected. It is obvious, therefore, that the crystal must be removed from its position directly in the antenna system (as shown in Fig. 184) in order to form a circuit, termed a local detector circuit, such as the one illustrated in Fig. 186, or the circuit in Fig. 188.

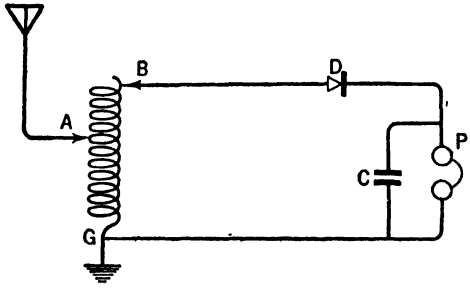

FIG. 188.—A circuit to illustrate the principles of conductively coupled circuits.

Various Types of Coupling Employed, with Practical and Theoretical Explanations.—The following section is one of great importance because the ability of the reader or student to comprehend the movements of radio power from one circuit to another is largely determined by the knowledge one possesses relating to the subject of coupling.

The features that govern resonance under practical conditions are described with the view of closely associating theory with practice.

The general scheme of detection has been fully explained and the purpose of the following paragraphs is to describe the ways and means for improving the selectivity and sensitivity of the receiver by various methods of coupling the tuned circuits, and to increase, or amplify, the volume of sound produced in the output of the receiver for a given radio input power of the incoming radio-frequency signal current.

There are three types of receiving circuits which may be classified as follows:

(1) Conductively coupled receiver—also called *direct inductive coupling.*
(2) Inductively coupled receiver—or *transformer coupling.*
(3) Capacitive coupling—also called *condenser coupling.*

There are two types of amplifier circuits:

(1) Radio-frequency amplification—where the signal currents

are increased in magnitude *before detection.* (Intermediate-frequency amplification is classified with this type.)

(2) Audio-frequency amplification—where the signal currents are stepped up in magnitude *after detection.*

Conductively Coupled Receiver.—If two circuits are associated in such a way that the signal energy is transferred from one to the other by means of an inductance which is common to both circuits, the circuits are said to be " conductively coupled." This type of coupling is also referred to as " direct coupling," inasmuch as part of the turns of a single coil constitute the primary circuit and part the secondary circuit.

The arrangement of the circuit is shown in Fig. 188. The primary or open circuit consists of the antenna, that portion of the inductance from *A* to *G*, and the ground conductor. The secondary or closed circuit is formed by the dector, the telephone receivers, with a fixed condenser shunted across them, and that portion of the coil from *B* to *G*. It is apparent that the turns of wire between *B* and *G* are common to both circuits and also that the circuits are actually joined by a metallic connection, or, we may say, electrically connected. The inductance used in this way acts as an auto transformer. *Single-circuit tuner* is the term broadly applied to all devices used in this way.

The *two-slide tuner,* now obsolete, provided the first means for coupling circuits conductively and at the same time permitted individual tuning of the circuits as follows: The frequency of the antenna circuit was adjusted by moving slide *A* along the wire and the frequency of the closed or secondary circuit was adjusted to resonance with the antenna by moving slide *B* along the wire. The slides were guided by two stationary rods mounted over the coil, the insulation being removed along the path of the sliders (or bare wire used) to provide surface contact.

The fundamental action of this circuit depends upon electromagnetic induction, for the oscillating current induced in the antenna by a passing wave will set up a fluctuating magnetic field about the turns from *A* to *G*. These magnetic lines of force thread through the entire coil and induce therein an oscillating current which flows from *B* to *G*, and then through the detector circuit. Part of the current induced in the antenna circuit flows by conduction directly to the detector, hence the terms *conductive coupling* and *direct conductive coupling.*

A variable tuning condenser is sometimes connected between *B* and *G*, thus making the circuit more efficient, for then the inductance and capacity of the secondary may be more nearly balanced with the inductance and capacity of the primary to secure resonance. However, this circuit does not possess the necessary selectivity for present-day

reception in eliminating unwanted signals, because the coupling between the circuits is altered considerably for each change in wavelength. If more turns are added in the primary section of the coil and fewer turns are used in the secondary part, the coupling is reduced. The circuits are then said to be *loosely* coupled, or technically stated, the *mutual inductance* between the two oscillatory circuits is decreased.

The conductively coupled type receiver possesses only moderately good selectivity provided the resistances in the respective circuits are kept at a minimum. The introduction of resistance in any oscillatory circuit causes a waste of energy and increases the decrement or broadness of tuning by the rapid dying away of the induced oscillating currents.

It is advisable to keep in mind the general coupling arrangement of this circuit because a great many of the modern vacuum tube receivers, which employ several stages of radio-frequency amplification before the signal currents are passed to the detector, utilize conductive coupling between the antenna and the first tube. The first tube is used to somewhat amplify the radio-frequency oscillations flowing from the antenna. This tube is merely used as a coupling tube between the antenna and the succeeding circuits of the receiver.

In general, a vacuum tube circuit of the conductively coupled type is untuned in receivers having more than two stages of radio-frequency amplification. Transformer or inductive coupling is commonly used in the subsequent radio-frequency circuits and these are provided with tuning adjustments to gain selectivity.

Inductively Coupled Receiver.—Because of the disadvantages of the single circuit, or conductively coupled receiver, it becomes necessary to connect the detecting apparatus in a neighboring circuit which is not directly connected to the antenna circuit. The circuit in Fig. 186 shows the primary inductance P as part of the antenna system. Primary P is coupled inductively to the secondary inductance S.

The transfer of energy from the primary to the secondary is purely through electromagnetic induction which takes place while a changing magnetic field is produced around P when oscillating currents pass through the antenna system. There is no actual or physical connection between the coils of the two circuits; that is, there is no metallic connection between them.

Primary winding P and secondary S together constitute a radio-frequency transformer. The inductance of either one or both of the coils may be altered by cutting in turns; that is, adding turns, or cutting out turns as needed, by means of a tap switch.

When one coil is used to couple two circuits, as in the direct or

conductively coupled receiver, the *self-inductance of the coil is common to both circuits.* Self-inductance is that property which a coil possesses in opposing any change of current flowing through its windings. Thus any change in adjustment to obtain a given wavelength materially affects the coupling and the resonant condition of the two circuits.

In the conductively coupled receiver, however, two distinct oscillatory circuits are provided. *The coupling is effected by means of the mutual inductance between the two coils.*

In commercial receivers the coupling is always made variable, which can be accomplished by varying either the distance between the coils or by changing the angular relation of the coils.

The term *vario-coupler* may be applied broadly to any radio receiving transformer in which the amount of energy transferred from one circuit to the other is regulated by changing the degree of coupling, as when changing the angular relationship between the coils.

Vario-coupler form of winding refers sometimes to a particular type of tuning instrument which consists of a cylindrical tubing, usually about 3 or 4 in. in diameter, on which is wound a large number of turns of wire. The antenna and ground conductors are attached to this coil, which is called the primary coil. The primary coil may be tapped at certain intervals to form two groups of turns, those with taps taken several turns apart and others single turns apart. This is done in order to tune the receiver, thus effectively covering the wavelength changes within the range of the receiver. A rotating element or ball upon which a certain number of turns of wire are wound is mounted on a shaft and placed within the primary coil. The rotor coil is called the *secondary* and its terminals are joined by connecting leads to the vacuum tube and its associated circuits.

The inductive relationship between the circuits is varied by rotating the secondary so that its axis may or may not be in line with the axis of the primary coil. When the windings on the two coils lie parallel, that is, in the same plane with their axes in line, the coupling is then said to be *close* or *tight*, but when the center axes of the coils are at right angles the coupling is *minimum* or *loose*. Intermediate degrees of coupling are secured by rotating the secondary between the position of maximum, or close, and minimum, or loose, coupling.

Coupling may also be varied by changing the distance between the coils, as in one form of winding called the *loose coupler* where the primary (the smaller coil) telescopes the secondary (the larger coil). The coupling is said to be tight or close when the coils are very close together (one completely within the other). Conversely, as the distance between

them is increased, the coupling is reduced or loosened. The loose coupler is practically obsolete.

The *primary circuit* illustrated by Fig. 186 consists of the antenna, the variable inductance L_1 and the ground conductor. A series condenser may be inserted in the antenna, either to lower the wavelength or to increase the selectivity on the higher waves.

The *secondary circuit* comprises inductance L_2 with the variable condenser C_2 connected across it. The diagram shows a detector circuit consisting of the crystal, potentiometer and battery, telephones and bridging condenser C_3, shunted across the secondary circuit L_2, C_2. If a vacuum tube detector circuit should be shunted across the secondary oscillatory circuit instead of the crystal circuit, it would not alter the fundamental principles relating to the inductive method of coupling two oscillatory circuits.

The action occurring in the inductively coupled type circuit shown in the diagram may be explained as follows:

The antenna circuit is tuned to the same frequency as the incoming signal by adjusting the inductance L_1. The fluctuating magnetic lines of force surrounding L_1 induce in secondary inductance L_2 an oscillating current of similar wave form and frequency. Therefore, it is necessary to adjust either inductance L_2 or vary the capacity of C_2 in order to establish resonance between the two circuits. Only then will the current reach maximum amplitude in the secondary circuit. When both circuits are adjusted to the same frequency, the product of the inductance and capacity values of the two circuits will be equal. This can be stated as follows: When the product of the LC values of both circuits is equal, the circuits are in resonance.

When the primary and secondary are represented by independently wound coils in a transformer, as just described, the source of the radio-frequency voltage induced in the secondary is the rapidly changing magnetic field which encircles the primary. This means that only those secondary turns which are nearest to and fall within the influence of the primary field where it is strongest or more concentrated (immediately surrounding the primary) will be acted upon and these secondary turns will have radio-frequency voltages generated in them. These secondary turns, then, are the source of the signal voltages, and any other secondary turns adjacent thereto will have little or no voltages induced in them. The latter turns are needed to provide the circuit with the required inductance, to match with a tuning condenser of a particular size.

It will be noted that the primary coil is always wound with fewer turns than the secondary and is usually mounted in a position toward

one end of the secondary. For example, the primary may consist of only nine or ten turns, while the secondary may be wound with about sixty to eighty or more turns, depending upon the diameter of the coil, the size of wire, and the capacity of the secondary tuning condenser for a certain wavelength range. One can readily visualize the magnetic field surrounding the small primary. Since the primary is located toward one end of the secondary only the secondary turns in the immediate vicinity of the primary will be acted upon to become the real source of the induced oscillating voltages, as previously mentioned.

In order to finish the explanation of the action in the simplest way, let us suppose that the signal originates from a spark transmitter and is received and made audible through the crystal circuit as shown in Fig. 186.

The oscillating current flows through the secondary circuit and passes to the detector, where it is rectified by the crystal. When the bridging condenser C_3 is shunted across the telephones the rectified radio pulsations during one wave train will flow through the telephones with a cumulative effect. This large pulsation of the average current in a rectified wave train of oscillations will cause the diaphragms to be sharply deflected. The diaphragms will move once for each wave train of oscillations received, and will vibrate at a rate corresponding to the spark (group) frequency of the transmitter.

Note that the spark frequency depends upon the type of spark gap at the transmitter (and of course upon the generator frequency). Therefore, the note produced by the vibratory motion of the diaphragms will vary in pitch or tone for the different types of gaps. The spark frequency of the different types of transmitters varies from approximately 400 to 1000 cycles or more. This range permits the production of a distinct musical note.

The general operation of the circuit has been described, but it is essential to understand how the efficiency of the inductively coupled receiver is affected by any change in coupling or variation in the proportion of inductance and capacity used in the secondary circuit.

Coupling and Its Effects.—Let us consider that primary inductance L_1 in Fig. 186 performs a double function:

First, it is adjusted primarily to place the antenna in tune (resonance) with the incoming signal frequency and receive a maximum value of current.

Second, it serves to transfer the radio energy to the tuned secondary inductance L_2.

Hence, only part of the total energy flowing in the antenna can be utilized in actually setting up oscillations in the secondary.

If the secondary is coupled loosely to the primary a small amount of energy will be extracted from the primary. This means that the mutual inductance between the coils is minimum, and the self-inductance of the primary will be changed very little. The resonant tuning qualities of the antenna remain practically unaltered and the antenna will respond with vigor only to signal waves oscillating at the same, or nearly the same frequency as its own resonant frequency. Under such conditions the circuit is *sharply* tuned.

By closely coupling the primary and secondary, using the methods previously described, a larger transfer of energy will take place, which means that the mutual inductance between the circuits will be increased. For the condition of close coupling the self-inductance of the primary will change to a marked degree. The natural frequency of the antenna adjusted by inductance L_1 is now somewhat destroyed by the change in its own self-inductance brought about by the close coupling. The tuning quality of the antenna is no longer critical. It will respond to a current oscillating at a frequency considerably above and below its natural or resonant frequency. The antenna circuit under these conditions is *broadly* tuned.

Extracting a large amount of radio energy from an oscillatory circuit has the effect of increasing the damping of the circuit. The induced current does not flow freely but dies out very rapidly. *Tight or close coupling throws the circuits out of resonance.*

The conditions that govern coupling in the oscillation circuits of a transmitter hold true also for receiving circuits. In either case if the circuits are closely coupled, they will tune broadly, but on the other hand if the circuits are loosely coupled they will tune sharply. The principles of resonance must be understood in order to enable one to adjust the coupling of the receiver circuits to the best advantage for the strength and character of the particular wave received.

The purpose of all variations in coupling is to obtain a maximum degree of selectivity, and, at the same time, give a good, strong, readable signal.

Proportions of Inductance and Capacity in Secondary Circuit.—The adjustments of the secondary circuit have a pronounced effect upon the strength of the signal. It would appear that any combination of inductance and capacity values could be used in the secondary as long as resonance was established with the primary to secure a maximum transfer of signal current.

This would be true but for the fact that *the detector in a receiving circuit is a voltage operated device*, hence, we must obtain from the secondary the highest possible e.m.f. and apply it to the detector.

If this is accomplished the detector will operate at maximum efficiency.

Refer to Fig. 186. With a large inductance L_2 and a relatively small capacity in condenser C_2, a substantially higher radio-frequency voltage will be impressed across the oscillatory circuit L_2, C_2, causing a larger increase in the amount of current flowing to the detector than could be obtained by a reversal in the proportions of inductance and capacity.

The reason for this, considering only the effect of the inductance, is that since the transfer of energy from the primary to secondary is through the alternating magnetic field surrounding L_1, a greater number of turns of wire used in L_2, to increase its inductance, will be acted upon by the magnetic lines of force of L_1. As a result a correspondingly greater e.m.f. will be induced across L_2.

We must take into account, however, the fact that every inductance (coil) has a certain amount of self-capacity due to the space between adjacent turns of wires acting in a manner similar to the dielectric of a condenser. The capacity effect is noticeable only when there is a difference in electrical pressure between the turns of wire, that is, when current flows through the coil.

Inductance L_2, even without condenser C_2 connected across it, forms an oscillatory circuit, for L_2 has the *two qualities of inductance and capacity.* If the inductance of the coil is increased, its self-capacity will also be increased. Consequently there is a practical limit to the size of an inductance when it is used in conjunction with a tuning condenser.

As a matter of fact, the ideal arrangement would be one where the inductance itself would be of the required value to receive an oscillating current of a given frequency without the addition of any external capacity, such as the capacity of the tuning condenser. This would be an efficient arrangement for a circuit designed to respond to only one frequency, or to the signals from one station having the same wavelength as the natural wavelength of the inductance and its self-capacity. Self-capacity is also called the *distributed capacity* of the coil.

A radio receiving set, however, must be capable of differentiating between signals of different frequencies within a given range according to the class of service for which it is used, either broadcasting or commercial. Hence, the addition of the tuning condenser C_2 is necessary, because it affords a practical means of a close and continuous variation of frequency.

Let us now consider the effect of the extra capacity added to the circuit by the secondary condenser.

According to the principles of electrostatic capacity, a condenser of

small capacity will be charged to a higher voltage than a condenser having a greater capacity for the same given amount of radio-frequency energy flowing in a circuit. *The voltage drop across a tuning condenser is the voltage applied between grid and filament of the vacuum tube.*

The very small amount of signal energy picked up by the receiving antenna is a fixed quantity. Unfortunately its magnitude cannot be amplified in any way by transference from the antenna primary to secondary. Hence, the largest useful signal voltage that might be applied to the grid of the tube can be fully utilized only by careful tuning and adjustment of coupling. We should proceed to adjust a circuit to a certain wavelength by reducing the capacity of the condenser (within certain limits), at the same time increasing the secondary inductance until resonance between primary and secondary is established. This procedure is possible only in commercial receivers which are equipped with many geometrically arranged taps that permit a close inductance variation by either increasing or decreasing the number of turns used on the primary or secondary coils. This same general theory would not apply to broadcast receivers, because of their simplicity of control and consequent elimination of variable inductances. This practical suggestion for tuning does not imply that smaller-sized condensers and larger inductance coils are to be substituted in order to use smaller capacities. As mentioned before, there is a practical limit to the size of inductance used with a given condenser.

Why a smaller capacity will build up a higher voltage can be easily understood by reviewing the factors which govern the capacity reactance of a circuit. The voltage drop across the condenser is determined by the amount of current flowing in the oscillatory circuit and the reactance of the condenser at a particular frequency. Let us suppose the signal frequency is increased, and the circuit is tuned, not by reducing the inductance, but by decreasing the capacity. Then a slight gain in signal strength might be obtained, because the reactance voltage in the condenser will be raised. A small condenser will be fully charged if a certain critical capacity is selected for a current oscillating at some particular frequency. On the other hand, if a larger capacity is used with a lower amount of inductance to tune to the same wave, the large capacity in this case will not take on a maximum charge. That is, the highest reactance voltage will not be built up across its plates. This is because the currents flowing to and from the condenser are reversing more rapidly at the higher frequency and consequently they have *less time* in which to build up a maximum charge.

Mutual Inductance and its Relation to Coupling.—Although mutual inductance is defined in relation to transmitter circuits it is advisable,

due to the frequent use of this term, to explain the behavior of the coupled circuits of a receiver.

Let us first consider the primary apart from the secondary. Depending upon the number of turns of wire, the spacing between the turns, the diameter of the coil, etc., the primary will have a certain amount of inductance. The inductance is due to the changing magnetic field surrounding the coil when radio-frequency currents flow through. The magnetic lines of force tend to oppose any change in the strength of the current producing them. The inductance, then, is a quality of the circuit due entirely to itself (due to its own magnetic field acting upon its turns), hence it is called the *self-inductance of the primary.*

Similarly, the secondary will have a certain amount of self-inductance, also depending upon the number of turns composing the coil, spacing of turns, etc. Both coils taken separately have the properties of self-inductance and both coils tend to prevent any change of current in them by the action of their individual magnetic fields.

Now, we must remember that just as the fluctuating magnetic field of the primary induces radio-frequency currents in the secondary, so do these induced currents, made to flow through the secondary, produce a fluctuating magnetic field which acts on the primary and induces currents therein. These currents also produce a field, which reacts against the normal primary field, thus altering the self-inductance of the primary. Here we find that if the two coils are placed reasonably close together the secondary has become an exciting circuit because of its action in re-transferring energy back to the primary, the effect of which is to alter the self-inductance of the latter circuit and consequently its resonant frequency. If two coils carrying oscillating currents are placed such a distance apart that none of the magnetic flux produced by either can react in this way, then the self-inductance of the respective circuits will remain unaltered.

The result of coupling a primary oscillatory circuit to a secondary oscillatory circuit, each of which is tuned to the same frequency, is an alteration in the resonant conditions of both circuits by the change in their two self-inductances. This effect of the circuits upon each other is called the *mutual inductance.*

Hence, every coupled oscillatory circuit, besides the self-inductances of the primary and secondary, has the mutual inductance between two such coils.

The effect of mutual inductance in actually throwing the circuits out of resonance with each other will become more pronounced if the coupling is increased (increased means more closely coupled) and less so for conditions of loose coupling. Mutual inductance also depends

upon the magnitude of the flux (produced by a current flowing through either of the coils) threading through and acting upon a given number of turns in the respective coils.

In order that this very important subject of coupling may be fully understood, the preceding paragraph may be amplified, especially the reference to the number of turns acting on one another. We may state the conditions in the following manner: *The degree of coupling is the ratio of the primary number of lines of force, threading the secondary turns, to the number of lines of force produced by the current in the secondary.*

If the primary inductance should be so arranged relative to the secondary that some of the turns of the latter are not being mutually acted upon by the primary flux, the coupling obtainable between the two circuits will be weakened by a certain amount. For example, in the customary construction of a radio-frequency transformer, the primary coil may occupy a position inside of and toward one end of the secondary coil; or the primary may be placed outside of the secondary with a small space separating the coils. In this case it is easy to see that all of the magnetic lines of force which normally encircle the primary may not thread through all of the secondary turns. Those secondary turns which do not fall within the influence of the primary flux (being the turns in the more remote position) cannot have an electromotive force induced in them and hence do not become sources of radio-frequency voltage. The turns referred to here merely act to add inductance to the secondary and give the coil the required inductance value to tune efficiently with a certain sized condenser.

In commercial long and short wave receivers the main secondary inductance is not placed in inductive relationship with the primary, but a small movable coil connected in series with the secondary circuit is mounted within the primary coil to receive the induced energy. The coupling coil then becomes the source of the induced oscillating currents, the main secondary inductance being used to tune the circuit.

The mutual inductance represents a definite quantity and is always present to some degree or other when two oscillatory circuits are coupled together. It is *the degree of coupling* that mainly determines the mutual inductance of two coils and the alteration of the self-inductance of the coils taken separately.

In summing up these facts we may say that:

(1) Coupling is required for the purpose of transferring radio power from the primary to the secondary circuits; and to do this efficiently both circuits are tuned to the same frequency.

(2) The closer the two circuits are coupled together, the greater will be the effect of mutual inductance, and it follows that a large change in the self-inductance of the two circuits is brought about.

(3) Too close a coupling is a disadvantage, whereas extreme loose coupling will weaken the amount of available energy in the circuit which is being excited.

It is evident that the operator, in actual practice, must select some intermediate position of coupling (when a variable coupling is provided, as in commercial receivers) to obtain maximum signal voltage in the secondary and at the same time maintain a certain required resonant

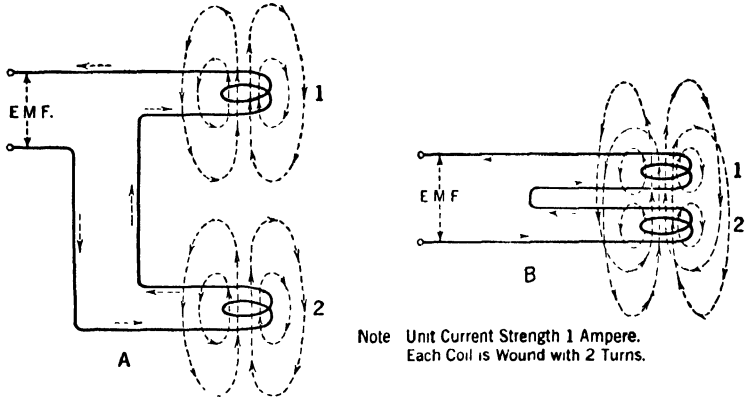

FIG. 189.—The principles of mutual inductance are clearly illustrated in these sketches.

condition between the circuits to secure sharp tuning giving increased selectiveness.

Mutual Inductance—The Action between Two Coils when Closely Coupled and when Loosely Coupled.—The abstract effect between two coils carrying current may be more easily understood by graphically illustrating the facts.

Refer to Figs. 189 and 190. From these diagrams it can be seen that the distance between the coils and the number of turns acting upon one another will determine largely the mutual inductance between two such coils. The next question concerns how the total self-inductance of the coils is affected by the amount of coupling or the mutual inductance.

Explanation 1. See Fig. 189. The two coils are connected in the manner shown in view *A*, and the loosest coupling is employed so that

the magnetic lines of force encircling either of the coils, when current flows, do not link each other; that is, they are not acting upon each other. The coils are wound with two turns each and in such direction that, when the current passes through to produce magnetic lines of force, as shown by the small arrows, the lines will take the same general direction around both coils.

Let us suppose that all of the lines around coil 1 act only upon all of its own turns and that all of the lines of coil 2 act only upon itself. In this case the lines around coil 1 are not cutting through or acting upon coil 2. Now, if 1 ampere of current flows through the circuit, it will produce 4 lines of force encircling each of the coils consisting of 2 turns each. Then each coil will have an inductance of 2 turns times 4 lines of force equaling a unit quantity of inductance of 8. Since the induc-

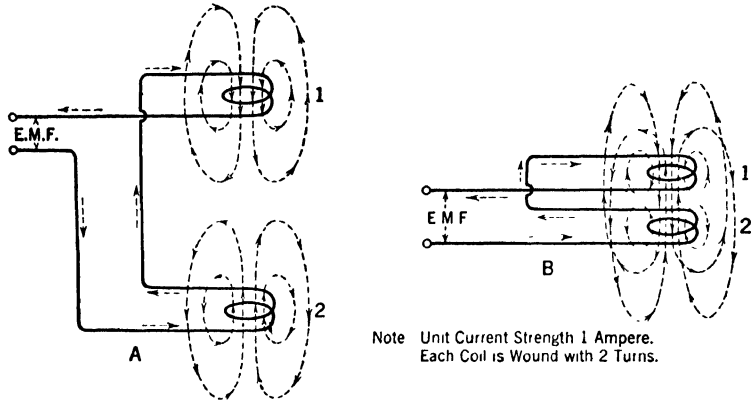

FIG. 190.—Another circuit for illustrating the principles of mutual inductance.

tance of coils 1 and 2 is similar, or 8 units each, the total inductive effect of the two coils upon the whole circuit is a unit of 16.

Refer to view *B*. The coupling between coils 1 and 2 is increased, as shown. It is now readily seen that some of the lines of force are acting upon all of the turns in adjacent coils, while other lines of force (the ones shown by the smallest circles) are only acting upon the turns of their own coils.

Although coil 1 and coil 2 are still producing individually the same number of lines as previously, the total effect is plainly altered as illustrated. The total number of lines encircling each coil will be greater than with the loose coupling in *A* by the addition of two lines from the adjacent coil. This effect actually causes a total of six lines to thread through each coil. The six lines can be counted. Hence, if the unit inductance of each coil is now 2 turns times 6 lines giving a unit of 12,

then the total inductance of the two coils together is 12 plus 12, or 24 units. The total inductance of the circuit has been increased from 16 units, when minimum or loose coupling was employed in *A*, to 24 units, for the close coupling in *B*.

The main point to be brought out here is that the difference between the inductance of the whole circuit (for the same unit quantity of current flowing, or 1 ampere), or 24 units, and the inductance of the two coils when loose coupled, or 16, is the mutual inductance of the two coils, or 8 units.

Suppose that the coupling is increased further than shown in view *B*, so that all of the lines produced by each coil thread through the adjacent coil. The resulting mutual inductance between them would be 16. This result is obtained in a way similar to that of the above explanation. The increase in coupling would cause the two smallest circles shown about each coil to actually link the other coil. This condition is not illustrated with any view, but it can be visualized easily.

Explanation 2. Refer to Fig. 190. View *A*. We will reverse the leads to coil 1 and the reversal of current flow through it will produce a magnetic field which opposes that of coil 2. The two fields now are not aiding each other. With the coils loosely coupled as shown in *A*, neither field acts upon turns of the opposite coil and therefore the conditions are similar to view *A* in Fig. 189, where the total inductance was 16 units. It can be said that coils 1 and 2 are not in inductive relation with each other. This means that *there is no mutual inductance between them.*

However, if we tighten the coupling, as shown in view *B* of Fig. 190, the fields of each coil will act upon one another, tending to neutralize their effects because the fields are opposed in space. This can be seen by the direction of the lines about each individual coil marked with the small arrows.

Now, it will be noticed that although the two smallest circular lines surrounding each coil are opposed in space, they do not thread through the two coils because the coupling has not been made close enough to permit this effect. On the other hand, the two larger circles or lines produced around the coils attempt to thread through each other. One might expect that the mutual inductance would be increased as in view *B*, Fig. 189, but this is not the case, inasmuch as these lines are opposed in direction and tend to buck one another. Actually, only two lines cut through, or link through, each coil. Hence, the inductance of each coil taken separately (i.e., its own self-inductance) is 2 turns times 2 lines or 4 units. The total inductance of both coils acting together will be 8 units. This time the mutual inductance is equal to 8 minus 16

because it is always the difference between the inductance of the two coils when the close coupling is employed (as in view *B*) and the total inductance when a loose coupling is used (as in view *A*). A minus quantity will result in this case, for 8 — 16 = — 8.

Suppose that we further tighten the coupling between coils 1 and 2 (not illustrated), causing all of the lines encircling the coils to act upon both coils. It is obvious that the mutual inductance would be minus 16 units. This problem should be readily understood from previous information. The 16 units represent the effect produced when all of the magnetic flux or lines of each coil lie within the influence of one another. More particularly, the coils have equal units taken separately, and their lines are opposed in direction, hence their forces are canceled or neutralized. This condition is one of *non-inductance*, the total inductance of the coils being zero.

The following paragraphs summarize the relation of this theoretical circuit to a practical circuit through which an alternating current flows. Let us assume that coil 1 is the primary of a radio transformer and coil 2 is the secondary. The changing magnetic field, when an oscillating current (which is actually an alternating current of high frequency) passes through, will produce effects similar to those outlined above. This was the purpose in showing the reversal of the current in coil 1 in the views marked *B* in Figs. 189 and 190.

It was shown that by reversing the current in coil 1 the mutual inductance adds to the self-inductance at one time, then subtracts itself from the self-inductance at another time, because the coils are closely coupled, or in inductive relation to each other.

When a current oscillating or alternating through a primary coil induces an alternating current in the secondary the effects are similar to the relations of the two coils used in the explanation. In other words, each circuit acts in a manner that makes its total inductance increase one moment and then decrease the next moment, but in the case of an oscillatory current these moments are very close together and the circuit behaves as though it possessed these two values of inductance simultaneously.

As a matter of fact, although each circuit may have a certain amount of self-inductance (its self-inductance taken alone, when the lines of one do not act upon the other, as in views *A* and *A* in Figs. 189 and 190) we must take into account the additional effect due to the mutual inductance when the coils are closely related (or when the distance separating them is small, as in views *B* and *B* in Figs. 189 and 190).

Therefore the circuits, when taken separately, in actual effect do not have one inductance value, but each really has two different induc-

tance values, the one when the mutual is added and the other when the mutual is subtracted.

Thus we find in practice that when two coils or circuits are coupled inductively, either one of the circuits taken individually cannot be considered to have an inductance value as determined by its own magnetic field taken alone. The mutual inductance is entirely dependent upon the degree of the coupling and the number of turns respectively that are being cut through or linked by the lines of force.

This subject of mutual inductance is a very important one, for the resonant conditions of two circuits are directly dependent upon it. The practical effects noticed, as outlined here and applied to the circuits of either a transmitter or a receiving set, are given below.

Mutual inductance accounts for the following effects:

(1) **In Receiving Circuits.**—For the broad tuning when the primary and secondary circuits are closely coupled, and conversely for sharp tuning when the coupling is decreased, or for a loose coupling.

(2) **In Transmitter Circuits.**—A broad wave is transmitted for tight or loose coupling, and inversely a sharper wave is sent out for the loose coupling. These effects are especially noticeable in the adjustment of the coupling in the oscillation transformer of the spark type transmitter. When the coupling is tightened beyond a certain critical adjustment, a second wave of comparatively large amplitude is radiated at the same time as the resonant wave. By gradually weakening or loosening the coupling, that is, reducing the mutual inductance between the coils by moving the coils further apart, the energy in the second wave can be materially reduced; thus a sharper wave or less interfering wave is sent out to be picked up by the receiving antenna.

Coupling—Practical Suggestions.—Whenever a variable coupling is provided between primary and secondary of a radio-frequency transformer, it should be judiciously used in order to obtain the maximum voltage for direct application to the grid, and also to provide good selectivity.

As we have explained before, a radio-frequency transformer is primarily designed to secure a maximum signal transfer by establishing resonance between primary and secondary and its turns ratio does not indicate a desire to obtain from this device any radio-frequency amplification. A large signal current flowing through the primary will pro-

duce a strong magnetic field encircling this coil. It should be clear that more turns will be acted upon if more turns are included within the influence of the fluctuating magnetic field of the primary, thus inducing an oscillating e.m.f. of maximum value in the secondary tuned circuit. Since the inductance of the primary coil is limited according to the oscillatory requirements, its number of turns is limited. In all types of tuned circuits we must look to the effectiveness of the primary coil for supplying a strong field to act on the secondary. If the primary of a radio-frequency transformer is part of the antenna circuit a strong field encircling the coil will be built up by tuning the antenna, i.e., we attempt to obtain zero reactance for the desired frequency.

If the coupling is too close, the frequency of each oscillatory circuit is altered because of the reaction of the magnetic field of the secondary upon the primary. This throws the circuits slightly out of resonance with one another and results in broader tuning with loss in selectivity.

On the other hand, if very loose coupling is employed, it results in a marked reduction in the amount of current induced in the secondary, because the secondary turns will be cut or acted upon very feebly by the primary field. These are, of course, extreme conditions.

Always bear in mind, whenever adjusting coupling, and when tuning from one wave to another, that the radio-frequency voltages induced in the secondary are proportional, not only to the strength of the primary magnetic field, but also to the frequency of the alternations, that is, the rate at which the rapidly alternating field of the primary cuts the secondary turns. It can be seen that for a given incoming signal strength the induced voltages will be much greater at the short waves, or high frequencies, than at the long waves, or low frequencies. For this reason, the primary coil may be moved farther away from the secondary when the circuit is tuned to the shorter wavelengths. Or, as actually found in most modern receivers, the variation in coupling is accomplished by changing the angular relationship between the coils, the primary coil being the rotating element. What may be an extreme condition of loose coupling for one signal may not prove so for some other signal.

To secure greater selectivity it is often necessary to reduce coupling to some value less than would be employed ordinarily. But, rather than to exceed certain practical limits in loosely coupling two oscillatory circuits for a given frequency, the inductance can be lowered by means of the tap arrangement, thus using fewer turns, with a resultant weakening of the field built up around the coil. The decrease in inductance will lower its reactance (opposition) to the oscillating currents at a par-

ticular frequency. The decrease in inductance used requires that the capacity be increased. This will lower the reactance that the condenser offers. Now, the capacity reactance and the inductive reactance can be so balanced by careful tuning that the circuit will be placed in resonance with the signal desired. Even with comparatively loose coupling, the adjustment carried out as suggested will allow the currents to oscillate with greater freedom through the circuit and the oscillating e.m.f. impressed across the terminals of the detector will reach the highest possible value under the conditions.

In commercial practice the operator listens in for the station's call letters with the circuits closely coupled, or broadly tuned. This is called the *stand-by adjustment.* When the station's call letters are heard the adjustment is changed to gain maximum selectivity with a reasonable audibility. A skilled operator knows all of these factors which govern tuning and this often accounts for the fact that very weak signals can be tuned in despite interference.

The act of tuning the receiving oscillation circuits for maximum strength of signals at a given impressed frequency may be summed up briefly as follows: The operator first adjusts the coupling and then tunes the primary and secondary circuits to resonance by increasing or decreasing the inductance, or capacity, or both simultaneously. What the operator substantially does when he adjusts the variable inductances and variable condensers is to cause the reactance of the inductance and the reactance of the capacity to neutralize and thereby reduce the total reactance to zero for the frequency of the incoming signal. The strength of the signal current is then solely dependent upon the induced electromotive force and the total equivalent resistance of the circuit, to include all losses.

The signal currents of the particular frequency we wish to receive will then oscillate with maximum intensity through the circuit and the circuit will at the same time offer a high impedance to any other frequency, depending upon the sharpness of tuning.

Resonance is established by making the product of the inductance and capacitive values of one circuit equal to some other circuit, but the degree of coupling must always be taken into practical consideration, for it must be adjusted so that the magnetic field of one coil will not react unduly upon the other and cause a change in the self-inductance which would alter the original conditions of resonance.

Let us consider that two spark transmitter stations may be operating simultaneously at the same wavelength, and in such a case it would be impossible to separate the signals, but the receiving operator may often distinguish between the two signals by the characteristic spark

note which is received. The audio-frequency currents flowing in the telephone receivers, corresponding to the spark frequency of the transmitters and notes of different pitches, will be heard, and the operator can concentrate on the one pitch.

Spark signals of the same wavelength can be eliminated occasionally if they have different decrements. If the decrement of the incoming signal wave is feeble, the primary and secondary may be loosely coupled, and conversely a highly damped wave requires close coupling between the circuits.

Interfering stations can often be tuned out by slightly detuning the primary and secondary. This of course throws the entire circuit out of resonance and lesser values of signal current will be available to operate the detector. Therefore, this practice of detuning or reaching approximate resonance is done only when the receiving antenna is situated close to the transmitting antenna.

If we remove the crystal detector circuit from its position across the oscillatory circuit, as shown in Fig. 186, and substitute in its place a vacuum tube detector, as we have previously mentioned, the operation of the tuned circuits will remain the same. It becomes then a matter of understanding the principles involved in detecting the presence of the oscillating currents flowing in the secondary circuit by means of the three-electrode vacuum tube.

While the inductively coupled type receiver, as shown in Fig. 186, may eliminate the interference from one to two stations, it may not do so in regard to other stations. This accounts for the fact that in the present-day receiver the detector is not always connected in the antenna-tuned circuit, but inserted between the detector and the antenna are one or more r.f. vacuum tubes and their associated circuits.

These circuits are similar in construction to that portion of the circuit we have just described, including the inductance L_1, and the secondary circuit L_2, C_2, which is inductively coupled to L_1. Each circuit preceding the detector is coupled by a vacuum tube which functions as a radio-frequency amplifier.

As the signal currents pass through each successive radio-frequency tube the energy is increased or amplified, and each circuit is capable of being tuned to exact resonance by a secondary condenser, as explained in previous paragraphs. The amplification of the initial signal current received and the tuning of the individual circuits are required to meet the present-day conditions for selectivity and general overall efficiency.

A complete radio transmitting and receiving system requires at least four major circuits tuned (resonated) to the same oscillation fre-

quency, or to the same wavelength, in order that signals may be communicated, namely:

At the transmitting station:

(1) The primary or closed circuit is adjusted to the desired frequency.
(2) The secondary or open antenna circuit is also adjusted to the same frequency.

At the receiving station:

(3) The primary or open antenna circuit is tuned to the same frequency as the transmitter.
(4) The secondary or closed circuit is then tuned to the frequency of the primary of the receiver.

In addition to resonating or tuning the four oscillatory circuits to the same given frequency, the receiving detector, whether crystal or vacuum tube, must also be adjusted to a state of maximum sensitivity.

Action of the Fixed Condenser Across the Telephone Receivers.—Figure 188 shows the fixed condenser C, sometimes called the *bridging condenser*, connected in shunt with the receivers.

The action of the condenser is illustrated diagrammatically in Fig. 185, where the curves in C show the pulsations of telephone current. The curves in A show the rectified pulsations.

In curve C, Fig. 185, the first half-cycle of high frequency rectified current is represented by the dotted line a and the current during this pulse flows through the detector and telephones and charges condenser C in Fig. 188. During the next half-cycle little or no current flows through the detector because of the rectifying action of the crystal.

The charge built up in the condenser during the first pulsation a will discharge its energy during this period and current will flow through the receivers in the same direction as the pulsation a which charged the condenser. This current, produced by the discharge of the condenser, is shown by the line 1. In a similar manner the condenser will be charged by the rectified pulsations b, c and d and discharge during the intervals between pulses as shown by the lines 2, 3 and 4.

It is apparent that by shunting the condenser across the receivers the flow of current will be more continuous and effective, for it is not broken up into short impulses. The variation of the average current in one group of oscillations will have a cumulative effect in producing a strong and steady movement of the diaphragms. This, of course, greatly improves the audibility of a signal.

For the impedance of the average high resistance type receivers the

capacity of the by-pass telephone condenser should be of the order of 0.001 microfarad.

Capacitively Coupled Receiver—Electrostatic Coupling.—The capacitively coupled receiver differs from the inductively coupled receiver in that the radio oscillations are transferred from the primary to the secondary by the electrostatic field in the coupling condensers.

The circuit in Fig. 186 may be altered easily to a capacitively coupled circuit by separating the coils and mounting them at right angles to each other so that no mutual inductance exists between them. Then connect a variable tuning condenser between the two upper terminals of the inductance coils and another variable condenser between the lower two terminals, through a tap switch by which the inductances of the respective coils may be adjusted.

The transfer of energy is not through the action of the magnetic field produced by the primary, but through the phenomenon of electrostatic induction. Just how capacity which is common or mutual to two associated circuits may be utilized in this way is explained fully under the caption "Condensers and Capacity," with figure diagrams to clarify the explanation.

Capacity coupling may also be called *static coupling* and *condenser coupling*.

The coupling may be varied by changing the capacity of the condensers without affecting the resonant frequency of either the primary or secondary oscillatory circuits. This would seem to be an improvement over the inductively coupled type, for this method of coupling open and closed circuits is in practical use in many of the modern vacuum tube transmitters, especially those which transmit on the low waves.

Capacity coupling is used throughout various parts of both receiving and transmitting circuits and it is well to have a comprehensive knowledge of the function of a condenser when it is charged and discharged, as this action is more easily understood by applying the theory given under the title "Dielectric-Displacement Current."

The coupling condensers in the receiver are tuned simultaneously. When the capacity is increased the coupling is increased and vice versa.

Vacuum Tube Receiving Circuits.—The general features involved when utilizing any one of three methods of coupling the antenna system to the receiver circuit have already been discussed and we will now consider the circuits encountered in connection with the operation of the three-electrode vacuum tube when employed to detect the passage of high-frequency currents, that is, when used to separate the audio-fre-

quency characteristics of a signal wave from the radio-frequency characteristic.

The three standard recognized types of coupling tuning circuits are:

(1) Conductive coupling—single-circuit receiver.
(2) Inductive coupling—two-circuit or double-circuit receiver.
(3) Capacitive coupling.

The theory of the vacuum tube detector and also the vacuum tube, when utilized to amplify radio-frequency currents, is treated in Chapter XI on " Vacuum Tubes " and does not require repetition here. It is the purpose of this chapter to discuss the various types of vacuum tube circuits.

A simple vacuum tube receiver or a receiver with a crystal detector will respond to damped waves radiated by a spark transmitter, interrupted continuous waves (I.C.W.), or modulated continuous waves of either telegraphy or telephony, but will not receive straight c.w.

If the receiver detector is of the regenerative type, or if a vacuum tube functioning as an oscillator is used, the receiver will then be receptive to all the above classes of radio waves.

Before proceeding with the standard receiving circuits which employ the vacuum tube, we will classify the receivers into four groups:

(*a*) *Tuned radio-frequency receiver.* It may have one or more stages of radio-frequency amplification preceding the detector.
(*b*) *Regenerative receiver.* A regenerative circuit is coupled to the detector to increase amplification of the signal, or to render the circuit capable of receiving continuous waves (c.w.) by setting the detector circuit into oscillation.
(*c*) *Receiver with both radio-frequency amplification and regeneration.* One or more stages of radio-frequency amplification will precede the regenerative detector. This is a combination of (*a*) and (*b*).
(*d*) *Super-heterodyne receiver.* This receiver employs one tube which functions as an oscillator, making it possible to receive the signals from transmitters of all types.

Reception of Continuous Wave (c.w.) Telegraphy.—Continuous waves are undamped waves alternating through space at a constant frequency, the amplitude of the alternations remaining uniform and unvarying. In this way they differ from the damped oscillations generated by a spark transmitter.

A continuous wave signal received in the tuned circuits of a simple detector will give no sound reproduction because the steady current passing through the headphones could not be made either to rise or to fall periodically in such a way that they would produce an average change suitable to cause the diaphragms to vibrate.

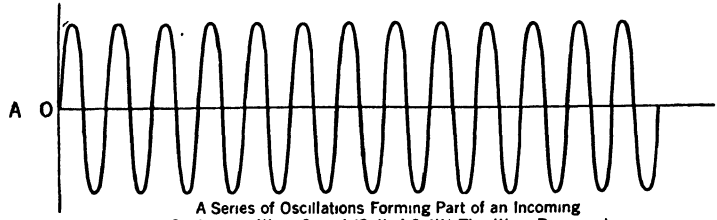

A Series of Oscillations Forming Part of an Incoming Continuous Wave Signal (Called C. W.) This Wave Represents the Fluctuating Voltage Impressed on the Grid

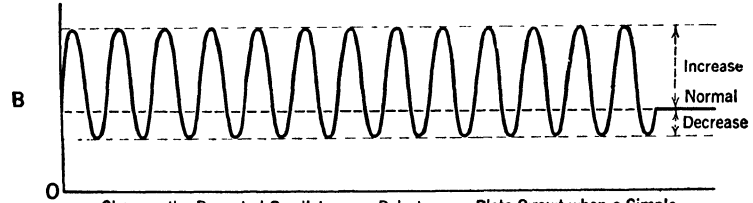

Showing the Repeated Oscillations or Pulsations in Plate Circuit when a Simple Detector is Employed (That is to say, Regeneration is not Used) Observe that the Oscillations are Constant in Amplitude and have no Periodic Fluctuations

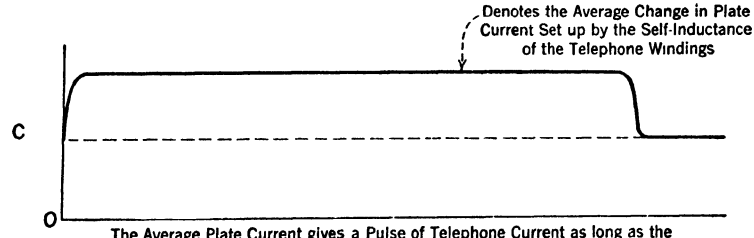

The Average Plate Current gives a Pulse of Telephone Current as long as the Duration of the Incoming C. W. Energy. Note the Absence of Periodic Increases and Decreases which would Permit this Current to be Converted into Audible Sound Waves by the Action of the Telephone Diaphragms

FIG. 191.—These curves may be used to explain why it is impossible to receive a c.w. telegraphic signal when a non-regenerative detector is employed in a receiving circuit.

The characteristics of this continuous alternating wave motion of constant amplitude strength require that the receiver be provided with means for producing a local current which by interaction with the incoming signal currents will produce a component or resultant current that will be modulated; that is, the resultant current will vary in strength at an audio-frequency, which, when detected, will actuate the reproduc-

ing unit of the phones or loudspeaker. This method of reception is called *heterodyne.*

Before discussing the principles that embody heterodyne reception, let us first consider how continuous waves may be received with a simple detector (non-regenerative) by mechanically making and breaking the circuits, through which the signal currents flow, at an audible frequency.

The continuous formation of the c w. signal waves is shown by curve *A* in Fig. 191. Continuous or sustained waves are radiated by the transmitting antenna in which continuous (sometimes called undamped) oscillating currents are flowing. The three modern types of transmitters which generate and radiate continuous (c.w.) waves are: the vacuum tube generator, the Alexanderson high frequency alternator, and the arc convertor.

When the key of the c.w. transmitter is depressed, the waves do not occur in groups (such as the groups of damped oscillations of the spark transmitter), but are produced continuously and are of uniform formation, which means that the telephone diaphragms cannot respond to any so-called group frequency (as in the case of the spark transmitter) and hence an audible sound cannot be produced.

With c.w. impressed on a simple detector circuit the action (without using a grid condenser) would be briefly as follows:

Let us suppose that the key of the c.w. transmitter is closed to send a dot or a dash, then a series of continuous oscillations is induced in the receiving antenna as shown in curve *A* of Fig. 191.

The oscillations will impress their energy on the grid of the vacuum tube as an alternating e.m.f. of constant amplitude. At each negative alternation the negatively charged grid will repel the electrons which form the space charge in the tube, and fewer electrons are then pulled over to the plate. This action lowers the conductivity of the vacuous space between the filament and plate, and a slight reduction of current below its normal value will flow in the plate circuit in which the telephones are connected.

On the other hand, the positive alternations will charge the grid to a positive potential, and the grid will then attract more of the negative electrons emitted by the filament which form the space charge. This increase in the number of electrons provides larger available supply to be pulled over toward the plate, due to its positive attraction. Remember that the plate always holds a positive electric charge because it is permanently connected to the positive electrode of the *B* battery.

The conductivity of the vacuous space between the filament and plate is increased by the positive grid and since electrons are *carriers* of

electricity, the current flowing in the plate circuit will increase. The plate current does not reverse its direction, but it will rise and fall at the same frequency as the incoming oscillations.

Because of the characteristic action of a vacuum tube detector when operated at the lower bend on its characteristic curve (the curve graphically illustrates the ratio at which the plate current varies for a given series of alternating voltage changes applied to the grid), the increases in the plate current, when the grid is positive, will be very much more pronounced than the decreases when the grid is negative. This is shown by the unequal rise and fall of plate current above and below its normal or steady value, as in the graph *B*, Fig. 191.

The telephone diaphragms cannot follow the rapid pulsations, as in *B*, but they will be attracted at the beginning of the series of oscillations by the average change in plate current and held throughout the entire duration of the dot or dash, thus producing only one movement. This one deflection of the diaphragms is shown in the lower graph *C*.

If, then, the transmitting station is sending out a stream of continuous waves, so long as the telegraph key remains depressed we should get a continuous steady current flowing through the receivers, without interruption or without variation which might cause the diaphragms to produce a buzz or note in the telephones.

Hence, this simple detector circuit would give us merely a number of single clicks at the start and end of a dot or dash and we could not then distinguish the code characters. If the diaphragms could be made to vibrate between fifty and one hundred times for the duration of the dot, and, of course, three times longer for the dash, then a note having a musical pitch would be received.

The above explanation makes it obvious that a simple detector will not respond to continuous (undamped) waves.

A device known as a *chopper* may be connected in series with the detector grid circuit (not in the tuned circuits) and it will function to chop up or break up the continuous stream of oscillations into groups at audio-frequency. In this way the amplitude of the otherwise continuous oscillations impressed upon the grid will vary periodically.

Each group of oscillations impressed on the detector grid will produce a direct current pulse causing one deflection of the diaphragms. Hence, the tone or pitch of the signal can be varied up and down the scale by changing the speed at which the circuit is opened and closed by the chopper. A chopper used in a receiving set is often called a *tikker* and it can be set to interrupt the circuit from 500 to 1000 times per second, which is at an audio-frequency.

Other devices, such as the tone wheel and the rotating plate con-

denser, have been used. The latter system functions to vary the capacity of the secondary circuit, and places it into and out of resonance with the signal frequency 200 to 1000 times per second. The improvement in the design of modern receivers has made the use of any chopping system in the receiver obsolete.

Provision is still made, however, to chop up the c.w. signals, when necessary, by including the chopper in the transmitting equipment, so it can be used to interrupt the circuits of the transmitter. The chopper will be found as auxiliary equipment in arc transmitters and vacuum tube transmitters not designed to generate a modulated (c.w.) wave for telegraphy, so that communication can be established with a receiving station not yet equipped with either a regenerative or continuous wave receiver.

Function of Transmitter Chopper in Relation to the Received Signal.—Briefly, the chopper consists of a small copper disk mounted on the shaft of an electric motor, usually 110 volts d-c. The disk is toothed, the spaces between the teeth being insulated with mica, giving the disk the appearance of a small commutator, such as is used on the end of either a d-c. motor or d-c. generator. One brush makes continuous contact with the copper disk and another brush rests upon the outer rim or periphery of the disk, alternately making and breaking the continuity of the circuit as the copper and mica segments pass under the brush when rotating.

During the interval that the brush rests on a mica segment no signals are radiated, but signals are sent out when the brush makes contact with a copper segment. Hence, the group frequency at which the continuous oscillations are interrupted depends upon the number of segments and the revolutions per minute of the motor armature. The speed can be controlled and the note in the receivers will vary, thus affording a means of cutting through interference.

The disadvantage of the mechanical means for periodically varying the voltage impressed on the detector grid to produce pulses of telephone current is obvious. The following paragraphs disclose the electrical methods for the detection of continuous oscillations, by providing a system which employs regenerative coupling or heterodyne principle.

Heterodyne Receiver—Beat Receiver.—In order to make a receiving set capable of detecting the presence of continuous oscillations without employing any of the so-called chopper methods, some system must be devised whereby the signal currents are converted into energy which will cause the normal steady flow of current in the telephones to rise and fall; that is, *to undergo a variation in strength at an audio-frequency.*

The reception of continuous waves is based upon the principle of

combining two alternating e.m.f.'s of different frequency, impressed simultaneously upon the same circuit. The interaction of the two e.m.f.'s will produce a resultant current having pulsations of amplitude which vary (rise and fall periodically) at a frequency which is lower than either of the two component frequencies which produced it. The resultant cycle of such pulsations of current is known as a *beat,* and the phenomenon of combining oscillations in this way is called *beating.*

The process of receiving continuous waves by combining two e.m.f.'s of different frequencies, one of which is the received signal oscillation and the other the locally generated oscillations, is called *heterodyne reception.*

The word " heterodyne " is derived from the Greek *hetero* (an element used in composing words, meaning different, other than usual, unlike) and *dyne* (the Greek word for power and force) thus signifying the production of *another or different force.*

The beat current will change the steady flow of plate current in the detector and cause it to rise and fall in a periodic manner which will move the diaphragms to produce an audible sound.

Later it will be shown that the interaction of the two sets of oscillations can be made to produce a resultant beat current which flows at a frequency beyond the range of audibility and is called the *intermediate frequency range.* It will then be necessary to pass the *intermediate beat current* to a second detector, to be converted into an audio-frequency current suitable for actuating the reproducing diaphragms. In the combining of two sets of oscillations in this manner there are actually two beat currents of different frequencies produced. However, only one of the beat frequencies is made use of.

The following is a good analogy to illustrate the principles involved in heterodyning: If two sound waves having different frequencies are superimposed upon each other, due to the interaction between the two, we will hear a third sound wave whose frequency is the difference between the two fundamental waves. This can be demonstrated easily to one's own satisfaction by striking two tuning forks of different pitch and then holding them close to the ear. Upon listening attentively a third (or beat) note will be heard. This is due to the interaction of the two fundamental sound waves as they periodically add and subtract their energies.

The beat note will have a vibration frequency which is lower than either of the two fundamental waves producing it, and the beat will have a humming sound, one such as might be produced by an intonation of the voice. A peculiar effect is that a second beat note, much higher than either of the two originals, is sometimes heard.

Musical instruments, especially organs, produce such beats. The interaction of two sound waves of slightly different vibration frequencies beating against each other is precisely similar in principle to the production of a third current when two alternating e.m.f.'s of slightly different frequencies are beating against each other in an electrical circuit.

This action is shown diagrammatically in Fig. 192. The oscillations

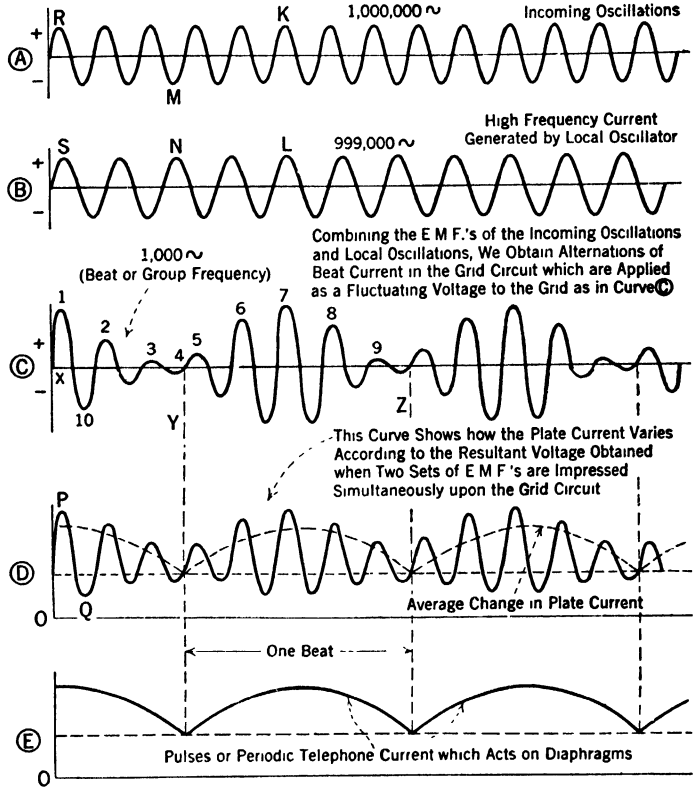

FIG. 192.—Heterodyne reception curves when plate rectification method is employed. Plate current curve (*D*) illustrates the principles of power detection.

of the incoming signal are shown by the curves in *A* and the local generated oscillations in *B*. When these oscillations having different frequencies combine, the resultant *beat frequency* will be the numerical difference between them. The beat frequency is shown in the graph *C*.

The beat frequency equals the number of beats per unit of time.

There are two methods by which this beat frequency may be produced, namely:

(1) By the use of *one vacuum tube* and its associated circuits: The processes of detection and generation of the local alternating current necessary to beat with the incoming oscillations are all accomplished with one vacuum tube.

(2) By the use of *two vacuum tubes*, with their independently associated circuits: One tube functions as the detector and the other as an oscillator generating the local alternating current in this system for the detection of continuous wave signals.

When the heterodyning or production of a beat current is accomplished in the circuits employing only one vacuum tube, as in case (1),

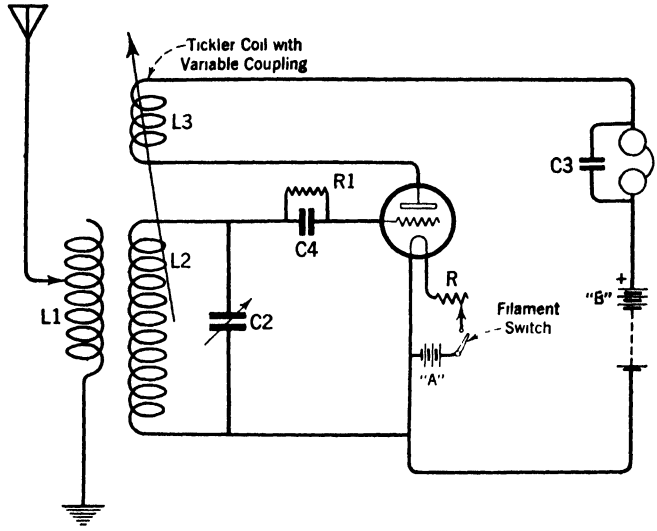

FIG. 193.—One type of an oscillator circuit for the reception of continuous waves.

it is called the *self-heterodyne* method of reception, but it is sometimes referred to as the *autodyne* method.

Homodyne Reception.—Homodyne reception, generally known as *zero-beat* reception, is the method used when an alternating current wave of the carrier frequency is generated locally by the oscillator tube in order to receive an incoming signal. This method of operation requires that the carrier wave or carrier current be suppressed, that is, not radiated by the transmitting antenna and therefore supplied at the receiving end to make the signals intelligible. Space does not permit a more detailed description of this system.

Self-Heterodyne Receiver.—Two typical oscillating vacuum tube circuits, suitable for the production of continuous oscillations which

utilize one vacuum tube as both a detector and an oscillator, are illustrated in Figs. 193 and 194.

The distinction between the two diagrams is the method of controlling the amount of regeneration, that is, the amount of energy fed back from the plate coil into the oscillating system; thus in Fig. 193 the inductive coupling is variable and in Fig. 194 the inductive coupling is fixed with the feed-back regulation provided by a variable condenser (throttle condenser) connected in shunt to the power source, the plate current " B " battery.

The circuits are known as the inductive feed-back type because in

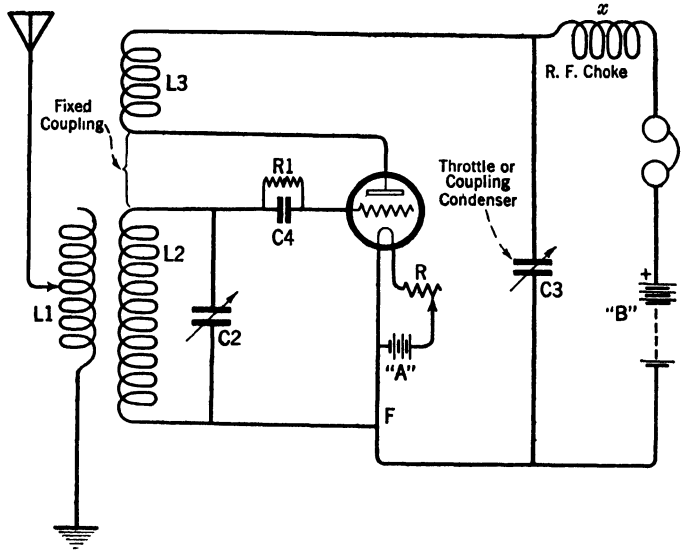

FIG. 194.—Showing how a vacuum tube is employed as a detector in a beat receiver.

each instance an inductance L_3, inserted in series with the plate circuit, is magnetically coupled (inductively coupled) to the grid inductance L_2 of the tuned oscillatory circuit L_2 C_2.

There are many variations in the arrangement and apparatus in a circuit of this type, but these two may be considered as standard methods for the reception of continuous waves.

The first requisite for an oscillator tube of this type is that the plate coil L_3 must be coupled close enough to the grid coil L_2, so that a changing magnetic field around L_3, caused by a pulsating plate current, will induce an alternating e.m.f. in L_2, which alternating voltage, when applied to the grid, will be of the correct polarity to cause a further variation in plate current.

Thus, when the circuits of the tube are properly connected and the inductive relationship between the plate and grid coils is of the proper sign (polarity), the tube and its circuit will function to generate continuous oscillations at the natural frequency of the tuned circuit L_2 C_2. At the same time, energy provided by incoming signal oscillations flowing to the grid will be reintroduced into the grid coil L_2 by the mutual inductance between L_2 and plate coil L_3, re-enforcing the plate current and resulting in the amplification of the signal.

Since the plate circuit is called the *output* of the tube and the grid circuit the *input*, it can easily be seen that part of the energy of the plate current alternations is transferred back into the grid circuit to be applied to the grid in the form of an alternating voltage in turn to enlarge the plate alternations. It is for this reason that we call this exchange of energy a *feed-back* action; that is, energy in the output circuit feeds back into the input circuit.

When the circuit is supplied with sufficient power, the cycles of energy feeding from the plate to the grid can be made *continuous.* Hence, *continuous oscillations will be generated.* This action will be explained in greater detail.

In the circuit illustrated in Fig. 193 the arrow drawn through the plate and grid coils indicates that the inductive coupling between the circuits is variable, providing a control for the amount of energy re-transferred from the output to the input. The plate coil L_3 is called a *tickler coil* when it is used in this way. In a circuit of this type, when used for continuous wave (c.w.) reception, the following condition will be noted: when the frequency of the tuned circuit L_2 C_2 is changed to receive a signal of a given frequency, the degree of coupling between the grid coil and tickler coil is also affected, and vice versa.

The circuit in Fig. 193 is commonly used as a *regenerator detector* for the reception of waves above approximately 200 meters. However, the circuit in Fig. 194 is more adaptable for use in the reception of short waves, or those approximately 200 meters and below.

By employing a fixed coupling between the plate and grid coils, as shown in Fig. 194, the circuit is stabilized, with the control of the feedback accomplished through the variable condenser C_3, which is shunted between the plate and the filament. The condenser must be connected to that end of the coil adjacent to the r.f. choke in order to include the plate coil as part of the oscillatory circuit.

Coupling condenser C_3 provides a path for the high frequency alternations of plate current. Although the radio-frequency pulsations of plate current do not reverse in direction, their rise and fall in value produces the same effect, as far as the charging and discharging of throttle

condenser C_3 is concerned, as would an alternating current. This is because a pulsating current is the equivalent of an alternating current superimposed upon a direct current; provided, of course, that the magnitude of the alternating component is not greater than that of the direct current component.

The frequency of the plate alternations depends largely upon the frequency of the alternate positive and negative charges on the grid,

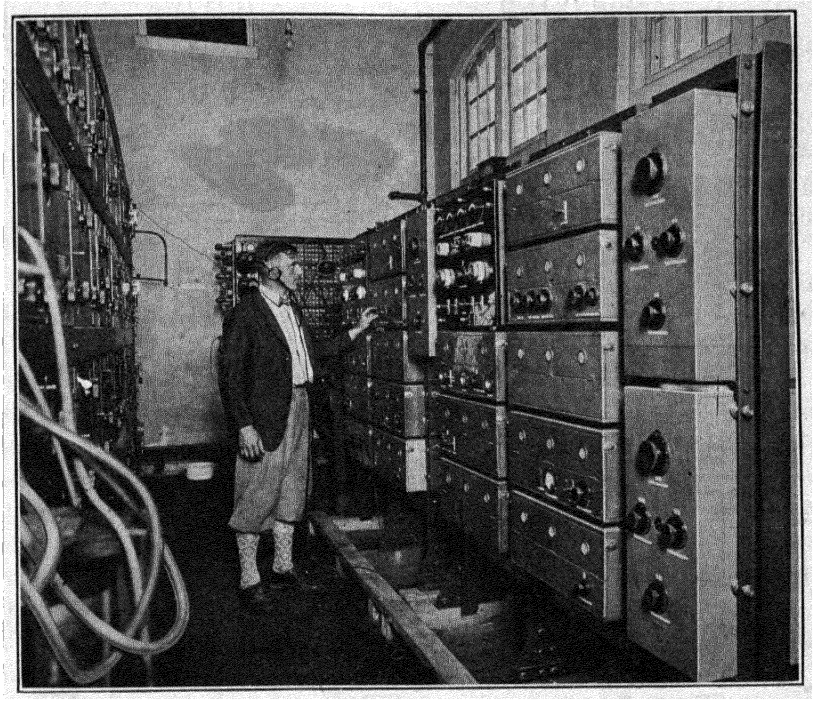

FIG. 195.—Beam system receiving equipment at RCA Station, New York.

this being directly governed by the adjustment of the tuned oscillatory circuit L_2 C_2.

By carefully adjusting the capacity of tuning condenser C_2 the circuit can be made to oscillate at a frequency which is slightly different from the frequency of the incoming signal. The resultant beat current due to the combining of the two frequencies is then detected by the tube in the usual way and the c.w. signals are reproduced in the telephone receivers. The frequency of the resultant current in the plate circuit is shown by curve C in Fig. 196, and the periodic fluctuations of the telephone current by curve D.

The strength of the local oscillations generated by the feed-back

action of the tube can be controlled, as previously stated, by variations in the capacity of coupling condenser C_3. We have learned that a condenser must be set at a certain capacity to carry efficiently a current of a given frequency. At any other capacity the condenser will set up an opposition, called reactance, which does not allow the free

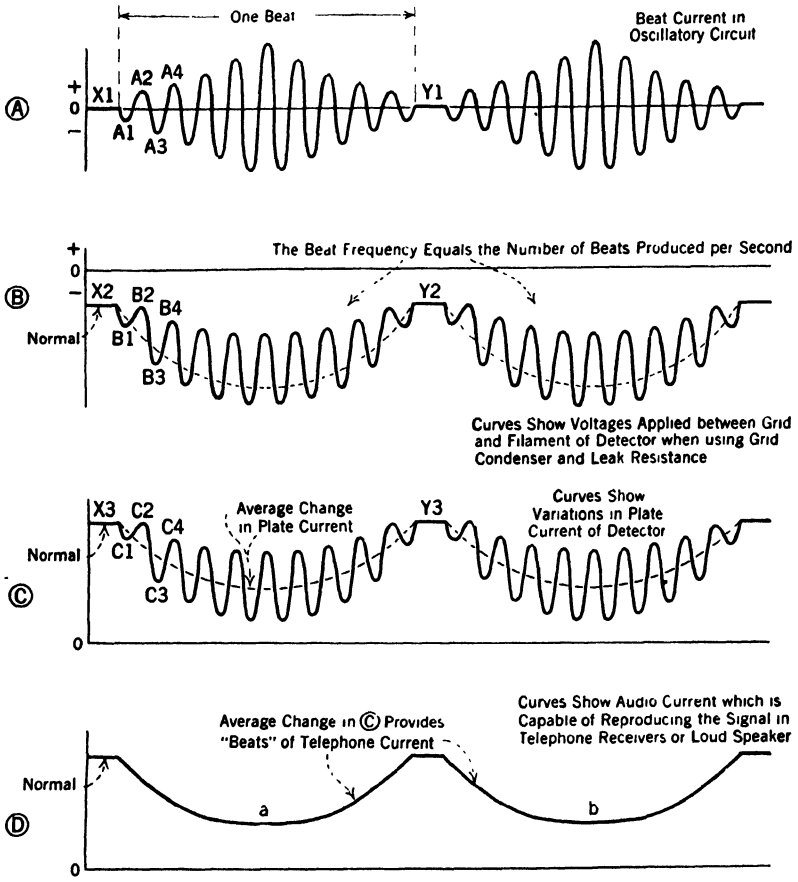

FIG. 196.—Curves showing the action of a regenerative beat (heterodyne) receiver when the grid leak-condenser method of detection (rectification) is employed.

movement of current through it at the frequency under consideration. Hence, the variation in the capacity C_3 will alter the reactance offered to the high-frequency current flowing through this coupling path.

The circuit is commonly known as a *self-heterodyning detector* because the tube functions both as an oscillator and detector. Due to its extreme simplicity it is particularly recommended for regenerative beat

reception. A circuit of this type is described under "Short-Wave Receivers," Chapter XXII.

Note that the feed-back can be controlled also by removing the coupling condenser C_3 and inserting in its place a variable resistance of several thousand ohms, which acts to alter the resistance offered to the feed-back current flowing from the plate (output) to the tuned oscillatory circuit L_2 C_2 (input). The amount of energy that will be dissipated, representing a loss of energy in the form of heat, depends upon the amount of resistance used. Since this is an oscillatory circuit, we may refer to any change in the resistance as a variation in the damping of the circuit.

THE OSCILLATOR

The Action of the Oscillator.—The following explanation of the action of the inductively coupled feed-back type circuit is given with the references made to the self-heterodyne detector illustrated in Fig. 193, assuming the grid condenser to be removed and the grid connected direct to circuit L_2 C_2.

If the conditions for oscillation have been satisfied, radio-frequency oscillations will be generated and their frequency will be determined by the values of inductance and capacity in the tuned grid circuit L_2 C_2. The continuous form and constant amplitude of this locally generated high-frequency alternating current is shown by curve B in Fig. 192.

There are some circuits in which the coupling between the grid and plate circuits is variable, as previously stated, and in this event the coupling would be continuously increased to set the system into self-oscillation. It is frequently found, however, that a sudden variation of the capacity of the tuning condenser will vary the potential sufficiently to accomplish this result.

In order to make clear the functioning of the tube as an oscillator and to follow more readily the sequence of events, suppose that the proper coupling exists between plate and grid and that the system is otherwise designed so that oscillations will begin to build up immediately when the circuit is set in operation.

First, let us be assured that the positive terminal of the "B" battery is connected to the plate; second, that the specified voltage as recommended by the manufacturer is used. The plate voltage may be varied somewhat within given limits to obtain maximum results. The circuit diagram in Fig. 193 shows the plate properly connected and it will receive a positive electric charge, the plate being known as the anode.

Next close the filament switch and carefully regulate the rheostat

R until the filament is supplied with the correct working voltage across its terminals to pass a given current which will raise the filament temperature to normal. The heated filament, called the cathode, will now emit electrons in large quantities. The vacuous space between the filament and plate will be filled with tiny negatively charged electrons, which now constitute what is known as the *space charge.*

The attraction which the positively charged plate bears for oppositely charged bodies will cause millions of these negative electrons to move towards the plate. The movement of electrons is considered as constituting a flow of current; therefore, the path between filament and plate is made electrically conductive by the electrons. Electrons which find their way to the plate must seek their own source, the filament, through the plate circuit.

The degree to which this path is made electrically conductive depends upon the quantity of electrons that reach the plate, or, stating this in terms of current, the amount of current flowing in the plate circuit is determined by the quantity of electrons attracted toward and actually reaching the plate. It can be readily understood that the external plate circuit is conductive, as it is a metallic circuit and electrons will flow through it under the pressure or electromotive force furnished by the " B " battery. However, the plate energy is referred to in terms of current, or *plate current.* In the following action it will be shown how the quantity of electrons reaching the plate may be increased or decreased by the electric potential on the grid, thus causing the plate current to rise and fall accordingly.

Before continuing it may be profitable to mention a few facts that will enable us to distinguish between the use of the terms *current flow* and *electron flow,* with particular reference to their direction.

For this explanation it should be repeated that whenever we refer to the movement of electrical energy through a medium in terms of *current flow* it is assumed that current flows from positive to negative, according to the old established rule, which still continues to be used in some practical work. On the other hand, according to the more recently invented *electron theory,* which is generally accepted, the supposition is that a movement of electrons from negative to positive constitutes a flow of current. This apparent discrepancy regarding the direction of current flow and electron movement will not be confusing if we continue to use for the purposes of practical work, and for conventional diagrams, the term electric current, with its direction of flow as just stated; whereas, for the explanations concerning the actual nature of the current and its behavior the assumption is that it is brought about by the movement of electrons.

The expressions to use are *current flow* and *electron flow*. Knowing what these terms stand for and also that they are merely relative, it should be easy for the student to comprehend this distinction. Until the future time when all engineering societies and electrical industries may agree upon uniformity of expression and make the direction of current and electron movement coincident, we must continue to employ the prevailing distinctions and designations.

Now it is possible to return to our subject and apply the above rule. The space in the tube is made electrically conductive, by the emission of electrons and their movement towards the plate under its attraction. When the filament temperature ceases to increase and reaches a constant heat, the electrons will move toward the plate in unvarying quantities; in other words, a steady current (direct current) will flow in the plate circuit under the e.m.f. furnished by the " B " battery. Of course, we know that a flow of direct current in the plate circuit must be due to a movement of electrons through its conducting wires under the pressure of the " B " battery. This current is known as *conduction current*, and its direction would be indicated in any diagram as flowing through the circuit from the positive to the negative electrodes of the " B " battery.

It is at this point that the expressions *current flow* and *electron flow* are used in a way that invariably causes some confusion to many students.

To clarify this situation, let us say that the actual conduction of electrons through the plate circuit—their progressive movement in the plate circuit through its entirety—is always referred to in terms of *current flow* or *plate current*, which is a *direct current*, because it is due to the direct e.m.f. of the " B " battery. However, the plate current flow is possible only because the vacuum in the tube is made electrically conductive, and this path then forms, together with the elements comprising the plate circuit outside of the tube, a complete or closed electric circuit. The latter function in regard to making the vacuum a conductive path is explained and always referred to in terms of *electrons in motion*, due to their emission by the hot electrode and attraction toward the plate. Simply keep in mind that the electronic flow within the tube from filament to plate is manifested by what is termed a flow of current through the plate circuit.

The action of the grid potential and its control upon the plate current can now be continued.

During the period of the filament temperature rise from a zero value, at the first closing of the switch when the filament wire is cold, up to the time that the temperature becomes normal and fixed, the plate

direct current will also rise quickly from a zero value up to a certain value wherein it remains steady, or at normal value. The disturbance occurring in the plate circuit due to the variation of the plate current is made to act inductively on the grid circuit, resulting in a charge being impressed on the grid. The grid then acts to vary the plate current at a radio-frequency by the following process.

It must be remembered that the changing plate current flows through plate coil L_3, Fig. 193. Therefore while the plate current is undergoing a sudden rise, as heretofore mentioned, a changing magnetic field will be set up around L_3. The plate coil L_3 is magnetically (inductively) coupled to the grid coil L_2; hence, as the changing magnetic lines of force thread through the turns of L_2 an e.m.f. will be induced in L_2. The grid will receive this induced voltage because coil L_2 is connected to the grid.

This phenomenon is based upon the principle that if the induced voltage is in correct phase with the current flowing in the grid, that is, if it has the proper polarity (sign) at this instant so that the charged grid will *assist* in attracting more of the emitted electrons (for example, a positively charged grid to increase the space charge), then a larger electron flow will move toward the plate. This will cause the plate current to continue rising above its normal value (that value at which the plate current would have remained constant had not the action taken place).

Energy has been extracted from the plate circuit by this transfer of power from the plate coil to the grid coil. This is the *feed-back* action. The changing plate current furnishes the e.m.f. to be applied to the grid; i.e., energy is transferred or fed back from the output to the input.

What occurs next is that the induced voltage in the grid coil drops to zero when the increase in the plate current finally ceases.

The plate current now begins to lower in strength, and therefore the magnetic field around the plate coil L_3 will begin to recede or move in an inward direction toward its own winding. This reduction in the magnetic field strength around L_3 causes the magnetic lines of force to thread through the grid coil in a direction opposite to their movement when expanding, as, for instance, when the plate current was rising in value.

The induced e.m.f. in the grid coil will now be *reversed in sign* (polarity). If we assume that the induced voltage this time places the grid at a negative potential, the grid will repel the electrons forming the space charge, so that the quantity of electrons available for attraction toward the plate is reduced. The latter action, of course, forces the plate current to decrease to less than normal value.

When the fall in the plate current finally ceases, the magnetic field around L_3 also stops changing and the induced e.m.f. in the grid coil L_2 will drop to zero. The negative potential on the grid no longer exists. Consequently the plate current will again rise in value.

Again, as the plate current increases in strength, the expanding magnetic field surrounding the plate coil will induce an e.m.f. in the grid coil, which voltage charges the grid this time to a positive potential. The positively charged grid assists the plate increase, as previously explained, and the plate current will continue to rise until it reaches its upper limit wherein no further increase can take place.

The rise and fall of plate current induces an e.m.f. in grid coil L_2, first in one direction and then in the opposite direction. Thus an alternating e.m.f. is induced in the tuned oscillatory circuit L_2 C_2. By following this action carefully, it can be seen that the e.m.f. fed back is aiding the oscillations, or in other words, one rise and fall of plate current produces one cycle of alternating e.m.f. in the grid circuit. Likewise, the alternating voltage in the grid circuit will vary the plate current, hence the action is retroactive.

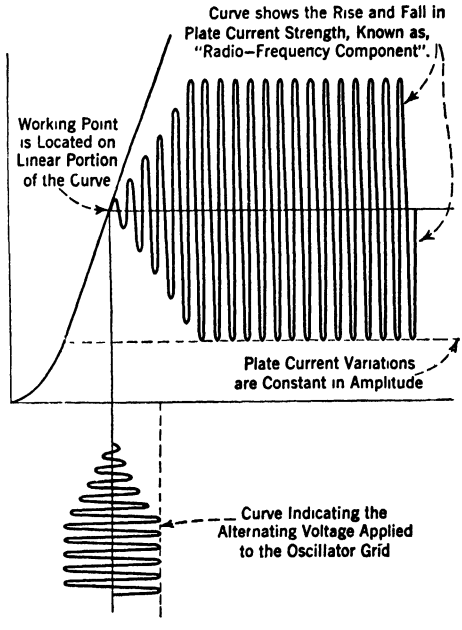

FIG. 197.—Graphical illustration of oscillator action. The oscillations build up quickly at the instant of closing the circuit and continue at constant amplitude and frequency so long as the operating voltages are applied.

The rate (frequency) at which the grid is alternately charged positive and negative can be controlled by the proper selection of inductance L_2 and capacity C_2, because L_2 and C_2 form an oscillatory circuit. The energy which drives this system comes from the power source supplying the plate current, which in this instance is a "B" battery.

Since this energy will reverse at very high frequencies, that is, at radio-frequencies, the *cycle* of alternating energy is called an *oscillation*. Oscillation and cycle may be used interchangeably in dealing with radio-frequencies.

After once starting this process of inducing an e.m.f. (no matter

how small) in the grid circuit by regenerative coupling, the action will persist and the oscillations will gradually build up in amplitude until a distinct upper limit, as shown in Fig. 197, is reached as determined by the characteristics of the tube and of the circuit shown in Fig. 193.

The plate current cannot decrease to a value less than zero and its maximum rise is limited by a given plate voltage and the temperature of the filament. These latter factors, in general, govern the space charge and restrict the quantity of electrons flowing between the filament and the plate.

Summary.—As long as sufficient power is supplied to the tube to compensate for all losses, the system will be kept in continuous oscillation. These losses include the extraction of energy from the plate circuit, due to the electromagnetic induction from L_3 to L_2 in Fig. 193, and the usual losses caused by the ordinary resistance of the circuit, but if the e.m.f. fed back is greater at any instant than that just required to sustain oscillations, the system will continue without interruption.

The sustained or continuous oscillations are constant in amplitude, as shown by the curve B in Fig. 192, and they are called the *local oscillations* because they are generated continuously, being independent of the oscillations induced in the receiver circuits by the incoming signals.

Further, it will be recalled that the plate coil and grid coil must be mutually related, so as to establish in the grid circuit an induced e.m.f. of the proper sign (polarity) to aid and not oppose the oscillations. Otherwise, oscillations will not be generated, which accounts for the fact that it is often necessary to reverse connections at the plate coil when originally assembling a circuit of this kind.

It may be said that the grid acts somewhat like a trigger or valve in regulating and supplying an alternative positive and negative potential *at the right time*, which in turn produces alternations of plate current, with the grid-tuned circuit controlling the frequency at which oscillations are generated.

The frequency of the alternations of the plate current will occur in synchronism with the oscillations in the tuned circuit. A simple mechanical analogy of this action would be the oscillating movement of a clock pendulum. If we wind up the spring to provide sufficient power to overcome all oppositions that are probable, such as friction at the bearings, air resistance, weight of the mass, and so on, the pendulum will continue to swing back and forth traversing the same distance at each swing; its oscillations are both continuous and constant in amplitude. An oscillation is a single swing from one limit to the other.

It has been shown that the oscillator tube and its associated circuits actually convert d-c. power (furnished by the "B" battery in this case) into a-c. power as represented by the radio-frequency oscillations.

The action of the oscillator has been explained and we will now turn our attention to the heterodyning of the locally generated oscillations with the incoming signal oscillations.

The Phenomenon of Self-heterodyning.—It is preferable in a circuit of this kind when used to generate radio-frequency currents and also to function as a detector, that the grid condenser and leak resistance be connected in series with the grid, the elements being indicated by C_4 and R_1 in Fig. 193.

The immediate effect of inserting the grid condenser in the circuit is to give the tube a more favorable characteristic for the detection of incoming signal oscillations by the telephone receivers; that is, the average variation in plate current is forced to occur considerably below normal with consequent increase in signals. This action is explained graphically as in the curves of Fig. 198.

When the tube is set into operation, the oscillations in the grid circuit build up gradually by the resulting changes in plate current through coil L_3 and cause it to act inductively on the grid coil L_2, setting the grid circuit $L_2\ C_2$ into oscillation. The grid is charged by an alternating voltage, but, due to the grid condenser blocking the grid current, a fixed negative charge remains on the grid, as shown by curve B, at the commencement of operations. The excess negative charge leaks off the grid through the leak resistance.

The action is modified somewhat from that illustrated in Fig. 192 by curves D and E where the plate current pulsations are shown to vary above and below normal, as in D, giving an average telephone current slightly above normal, as at E, when the grid condenser is not utilized.

As in Fig. 198 the incoming signal oscillations as shown by curve A charge the grid condenser C_4 in Fig. 193. Now, the accumulation of electrons on the grid due to the alternate positive and negative potentials causes an increasing negative charge to build up on the grid, which throws all of the potential swings below the normal negative voltage the grid would assume if this re-transfer of energy through regenerative coupling did not take place.

The grid charge becomes increasingly negative, as shown in curve B, Fig. 198, by the first few swings depicting the alternating potential applied between grid and filament, until a steady state of oscillation is maintained. The tube oscillates steadily when the amount of electrons received by the grid, due to the alternating potential impressed on the

grid, is equal to the rate at which they leak off through the grid resistance R_1.

The plate current repeats the grid voltage variations as shown by

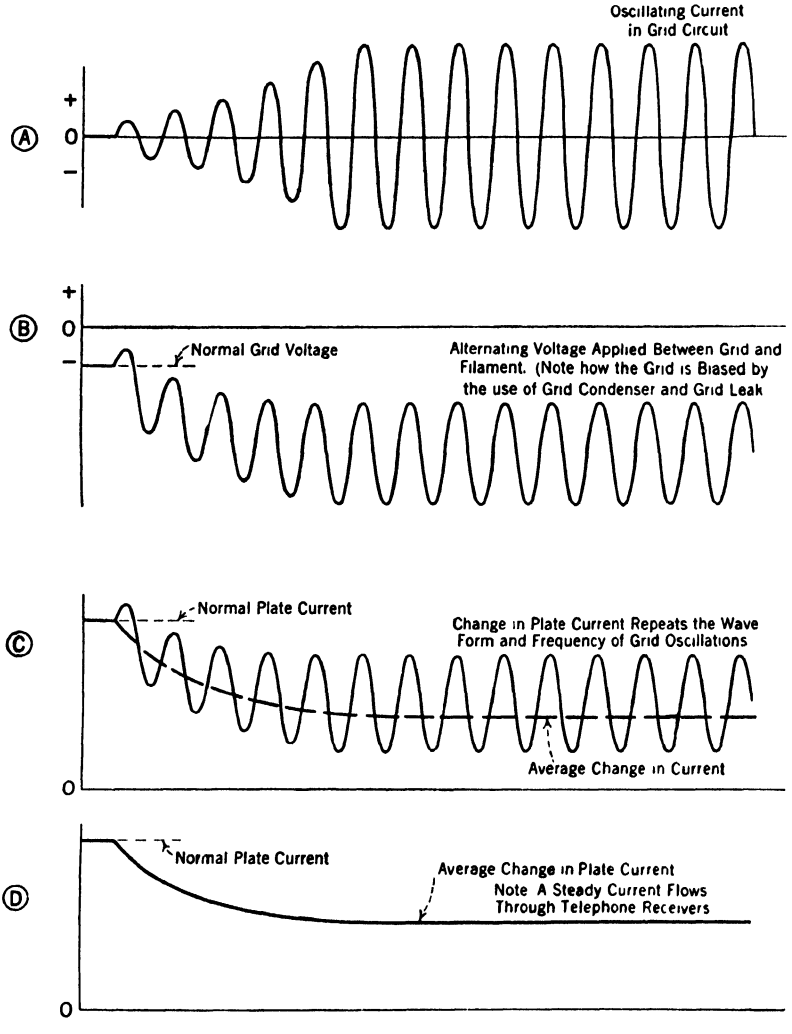

FIG. 198.—Curves illustrating how a received continuous wave acts upon a simple detector (non-regenerative detector) to produce an unvarying current in the telephone headset.

curve C, where the radio-frequency pulsations occur in the range between zero and normal current values. The average change in the plate current, as shown by curve D, is a steady flow of current through

the telephones when the tube is functioning only to generate continuous oscillations; that is, when acting as an oscillator only.

As pointed out previously, these local oscillations are generated independently of the incoming signal oscillations. If a continuous wave signal is received the tube and its associated circuits will fulfill the functions of both oscillator and detector. To produce beats the frequency of the tuned oscillatory circuit L_2C_2 is adjusted to differ slightly from that of the signal frequency.

The two radio-frequency e.m.f.'s are impressed simultaneously in the tuned circuit. The signal oscillations charge the grid and are amplified through the regenerative coupling; that is, the signal is re-introduced in the grid circuit in amplified form. These amplified signal oscillations interact, or heterodyne, with the local oscillations producing *beats* having pulsations of amplitude, as shown by curve A of Fig. 196, which alternately increase or decrease the potential of the grid to the filament, as in curve B.

The alternations of grid potential are repeated by the radio-frequency alternations of plate current as in curve C. Moreover, it is easily seen that the fluctuations of plate current rise and fall in a periodic manner; and that the average change in plate current produces one audio-frequency pulse indicated by the dotted line, reproducing the beat, which has pulsations of amplitude, as in curve A.

The periodic rise and fall in the plate current is that shown in the curve D, also the dotted line in curve C, giving the requisite audio pulses marked a and b to which the diaphragms will respond. This action is taken up in greater detail in following paragraphs.

Heterodyning and Amplification of the Continuous Wave Signal.—A continuous wave signal will induce an oscillating current of largest magnitude in the antenna when it is tuned to possess zero reactance for the signal frequency, as for instance, when tuned by the inductance L_1, as shown in Fig. 193. Now, due to the mutual inductance between L_1 and L_2, oscillations of the same frequency will be induced in L_2. The signal is introduced into the secondary circuit by electromagnetic induction. The various steps in amplification and detection of the signal are discussed in the following paragraphs.

(*a*) The signal oscillations will place alternate positive and negative charges on the grid, and it follows that the plate current will rise and fall with alternations of the same frequency, thus repeating the signal wave, but in amplified form.

We know this to be true because every vacuum tube functions as an amplifier, irrespective of the exact nature of any other specific duties it may perform. This is an inherent characteristic. It is due

to the fact that an alternating voltage impressed on the grid simply changes the electrical potential of this electrode and influences the quantity of electrons reaching the plate. In this way the grid acts more or less as a relay in regulating the amount of current flowing in the plate circuit, the actual power or potential force being furnished by the plate " B " battery.

A fractional amount of voltage placed on the grid by the incoming signal oscillations will cause relatively large variations in plate current.

(*b*) The signal is again amplified by the feed-back or regenerative action of the tube.

The plate current flows through plate coil L_3, producing a changing magnetic field around L_3 which acts inductively upon grid coil L_2 and sets up in the grid circuit an alternating e.m.f. If this induced voltage due to feed-back is of the proper sign (polarity) with reference to the signal alternations which primarily produced it, then, naturally, the grid potential will be raised, resulting in a stronger plate current.

This amplification of the signal is occurring at the same time that local oscillations are generated.

(*c*) Amplification of the signal is again secured, practically independent of the first method of amplification, by employing this vacuum tube as a self-heterodyne detector. The amplitude of the beat current is enlarged by combining the applied signal frequency and the locally generated oscillations.

This action is shown diagrammatically in Fig. 192. If the amplitudes R and S, in curves A and B respectively, reach their maximum values simultaneously it means that the two e.m.f.'s are applied to the circuit in the same direction and are therefore in phase at that particular moment. The two energies add together to produce a larger amplitude, as shown by positive amplitude 1 in the beat current curve C.

Two things which occur at the same time are said to be *in phase.* It is clearly seen that the next two amplitudes are a few degrees out of phase; that is, they do not occur in unison because of their difference in frequency. The instantaneous values of these two amplitudes are now added to obtain the resultant amplitude, as shown by amplitude 2 in curve C.

It is to be observed that at certain times during the cycle these e.m.f.'s are not applied in the same direction or in the same phase. The curves A and B show the e.m.f.'s. as they continue getting out of step, or out of phase, until finally a negative alternation in curve A reaches its maximum amplitude M, at the same instant as does a positive alternation, N in curve B. The two energies are now applied in opposite directions, and being 180 deg. out of phase, they will

buck or oppose each other. Since they are equal in strength the resultant amplitude of the beat current will be reduced to zero, as indicated by point 4 of curve *C* on the zero axis.

Following this particular moment, the two e.m.f.'s begin to move back in phase, until a positive amplitude is again reached in one curve *A* occurring at the same instant as a positive amplitude in curve *B*. The two amplitudes are indicated by letter *K* in curve *A* and by letter *L* in curve *B* and they add together to form the larger amplitude 7 in curve *C*.

The two sets of oscillations continue adding and subtracting their amplitudes in this way during the successive cycles, with the result that one complete rise and fall of beat current is obtained, as shown, for example, between *Y* and Z, curve *C*. This is called a *periodic* variation in amplitude of the beat current.

The periodically changing amplitudes in the beat current curve *C* are applied as an alternating e.m.f. to the grid of the tube, and its action as a detector is summarized as follows:

(*d*) Explanation of the detector action may be greatly simplified when a grid condenser is not employed.

Owing to the fact that a detector tube is always operated at the bend in its characteristic curve a positive grid potential will cause a large increase in plate current. The positive e.m.f., shown by amplitude 1, curve *C*, produces the plate increase indicated by *P* in curve *D*. On the other hand, an equal, or nearly equal, negative grid will cause a very slight reduction in plate current. The negative voltage indicated by amplitude 10, curve *C*, causes the plate current to drop a little below normal, in the manner shown at point *Q*, curve *D*.

Curve *D* shows the subsequent alternations of plate current with the increases above normal value much more pronounced than the decreases below normal. It is thus evident that when an alternating e.m.f. is impressed on the grid, the positive halves of the repeated plate current exceeds the negative halves. In this instance positive halves refer to plate current increases and negative halves to the decreases.

It is this unequal or asymmetrical change in plate current that gives the tube its fundamental detector action.

The rise and fall in the plate alternations, as between *Y* and *Z* in curve *C*, is equivalent to a resultant increase in plate current insofar as the action upon the telephone receivers is concerned. This increase will energize the telephone magnet coils. Hence, one beat, as from *Y* to *Z*, will act to produce one click of the diaphragms.

It should be apparent that all the processes of amplification, generation of the local oscillations, beat production, and detection of the continuous wave signal, have been accomplished in the circuits of one

vacuum tube. It is for this reason that a tube so functioning is called a *self-heterodyning* detector.

Remarkable amplifications are secured in this way, sometimes totaling several thousand. It must be remembered that the extent to which weak signals may be amplified depends upon the relation between the ratio of the magnitude of the initial incoming signaling current to the local oscillations and the final signal current in the telephones.

General Considerations Relating to the Heterodyne or Beat Receiver.—The outstanding advantage of the heterodyne method of reception is that it not only permits the detection of incoming oscillations by producing an audible beat note, but it provides for considerable amplification or building up of the signal. The beat current is many times larger than the small signal current induced in the antenna by the passing waves.

Another advantage is that the pitch or note heard in the receivers may be varied to suit the individual ear when receiving telegraphic signals, as it is dependent upon the frequency difference in the signal and local oscillations. For any change in the capacity of the secondary condenser the beat note will vary in pitch.

To cite an example showing how this may be put into practical use in tuning out interfering signals: Let the wavelength of the incoming signal be 600 meters, corresponding to a frequency of 500,000 cycles, and then suppose that at the same time an interfering signal is heard with considerable strength whose wavelength is 610 meters or 491,803 cycles.

If the tuning condenser is adjusted to give a local current of 499,000 cycles per second, the interaction with the desired signal frequency will give a beat of 1000 cycles. The beat note is always the numerical difference between the two radio-frequencies.

When the local oscillations beat with the undesired frequency of 491,803 cycles a note of 7197 cycles is heard. The pitch of the note in the receivers is widely different; in fact, the interfering signal is close to the upper limits of audibility, so the operator can easily distinguish between the two tones and concentrate on the signals of the station he desires to receive to the exclusion of others.

It is obvious that any desired beat note may be obtained by adjusting the condenser capacity, and thereby interfering signals either may be partially separated until they almost drop out, or vanish, causing the beat of the unwanted signal to be raised to some frequency too high to be heard.

Another point to be established is that the signal may be heard often at two different adjustments of the condenser, one above reso-

nance, called the *upper peak* and also at a point below resonance, or at the *lower peak*. This is generally known as *two-spot* tuning and provides another means for differentiating between interfering signals. Thus, if a signal current of 1,000,000 cycles interacts with a local current of 999,000 cycles the beat frequency will be 1000 cycles. Now, if the tuning condenser is rotated to the other side of resonance to produce a local frequency of 1,001,000 cycles, the beat will still be 1000 cycles.

Discussing the action taking place in the circuit if the local oscillating circuit is tuned to resonance with the antenna circuit at the signal frequency, the two sets of oscillations will be synchronized, i.e., they will be in exact phase, thus their maximum and minimum amplitudes

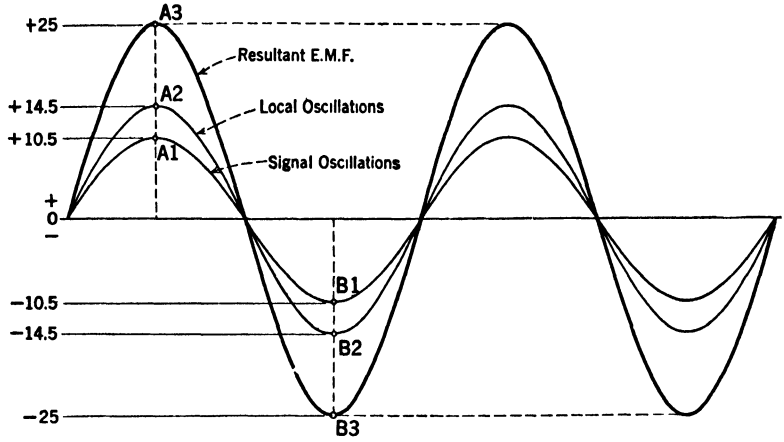

FIG. 199.—Curves of two e.m.f.'s of similar frequency but of different amplitudes which are acting simultaneously upon the same circuit. They combine and produce a third or resultant e.m.f. of similar frequency and larger amplitude. Note that the beat effect is absent.

will coincide during each cycle, and the resultant current is found by simple adding the strength of the oscillations at the different moments throughout the cycles; that is, their instantaneous values are added.

The oscillations and resultant e.m.f. are illustrated diagrammatically in Fig. 199; the oscillations are constant in amplitude but the resultant e.m.f. or voltage is greater in magnitude than either of the two contributing e.m.f.'s or oscillations. There is no periodic pulsation produced such as is necessary to cause the telephone diaphragms to move. The absence of this beat effect is evidenced by silence in the receivers.

The results would be equivalent to what might be expected if we should attempt to receive continuous-wave signals with a simple detector.

Theory of the Beat Receiver.—The principles of the design and application of a beat receiver have been described in a general way, but to fully understand what happens when two radio-frequency oscillations of slightly different frequencies combine requires that the situation be analyzed. The action can best be presented by comparing, first, two e.m.f.'s in phase, and second, two e.m.f.'s out of phase:

(1) Two e.m.f.'s in phase are shown and identified in Fig. 199 as follows: A_1 represents the signal oscillations, A_2 the locally generated oscillations and A_3 the resultant e.m.f. The relative strength of these e.m.f.'s can be measured in terms of a given number of millivolts, but explanation is facilitated by putting these values into figures, and assigning an arbitrary value in units for each one.

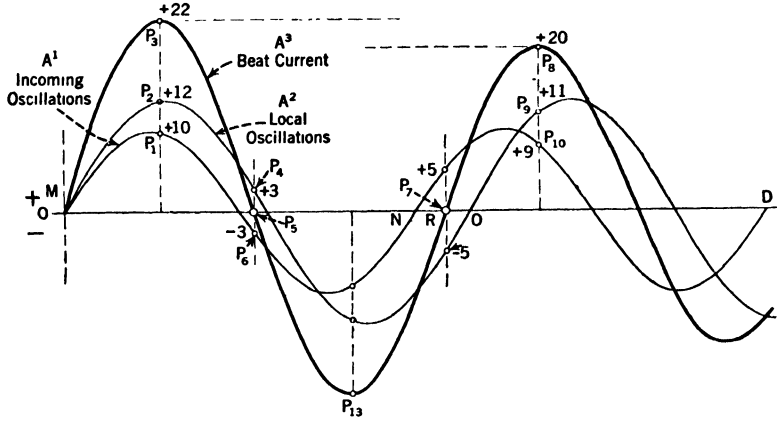

FIG. 200.—How beat current oscillations are produced by the interaction of two sets of oscillations of slightly different frequencies.

For example, assume that the value of the signal oscillations varies from zero to 10.5 units, both in a positive and negative direction, and that the local oscillations generated by the tube varies from zero to 14.5 units at each alternation.

The curves show that the two sets of oscillations flow in exact phase, reaching their maximum and minimum amplitudes simultaneously during each cycle, but the oscillations are of different strength.

Adding the positive 14.5 units at A_1 and the positive 10.5 units at A_2 gives 25 units indicated by point A_3. Similarly, adding the negative 10.5 units at B_1 to negative 14.5 units at B_2, the resultant e.m.f. reaches a magnitude of 25 units in the negative direction, as at point B_3.

Although the resultant e.m.f A_3 and B_3 are larger in amplitude than either of the two component e.m.f.'s, there are no beat pulsations pro-

duced. It is obvious that the resultant e.m.f. is of similar frequency, and also that the amplitudes in each successive cycle will be constant, or unvarying, and will therefore have the same characteristics as the continuous wave signal itself.

(2) If the local circuit is tuned slightly out of resonance with the signal frequency, the two voltages A_1 and A_2 and the resultant beat current A_3 will appear as in the diagram of Fig. 200. The curves show that we have assumed different amplitude values from those given in Fig. 199. This is done to make the conditions practical.

The oscillations do not reach their maximum amplitudes simultaneously through the successive cycles. The resultant current is found by successively adding and subtracting the amplitudes of A_1 and A_2 at their different instantaneous values—at the different moments throughout the cycle. In mathematical terms, the positive and negative values are added algebraically.

At P_1 the value of A_1 is 10 units, and of A_2 at this moment 12 units at point P_2. The amplitude of the resultant current A_3 is $10 + 12$, or 22 units, indicated at P_3. At point P_4 the value of A_2 is $+ 3$ units and of A_1 at this instant $- 3$ units indicated at P_6. The amplitude of the resultant beat current will lower from its maximum at P_3 to zero, as shown at point P_5, on the zero axis $O\ D$. Points P_{13}, P_7, P_8 and all intermediate points are plotted to construct curve A_3.

It is evident that at points P_5 and P_7 the two sets of oscillations interfere with each other; that is, while oscillation A_1 flows through the circuit in one direction, the oscillations A_2 at this moment are applied in the opposite direction and they possess equal amplitudes. The two sets of oscillations are 180 deg. out of phase at this moment. The amplitude of the resultant beat current is therefore zero.

The next point to be considered is P_8. At this point the amplitude of the resultant current is $+ 20$ units. It is now seen that P_8 is less than P_3 by 2 units, and it is here that we can visualize the underlying principle of beat production. The interaction of the two oscillations have caused a variation of the amplitude of the resultant current, which is called *pulsations of beat current.* The succeeding amplitudes will decrease progressively in value until they reach zero.

When the oscillations A_1 and A_2 move in and out of phase, that is, their phase relation changes progressively from 0 to 180 deg. and back to 0 deg., the amplitudes of A_3 beat current will rise and fall between the limits of zero and maximum values, being in this instance between zero and 22 units.

A complete cycle of such pulsations is called a *beat,* and is graphically shown in curve C, Fig. 192, from Y to Z. If, as previously stated,

this periodic building up and diminishing of the beat current amplitudes is made to fall within the audio-frequency range, the telephone diaphragms will be deflected at rates varying with the periodic fluctuations.

By the proper selection of the frequency of the local generated component, any desired beat frequency may be obtained, either in the audio range, or beyond audibility in the intermediate-frequency range. The intermediate-frequency is utilized in the circuits of the superheterodyne receiver.

Regenerative Beat Receiver Employing Grid Condenser Method of Detection.—Up to the present we have considered the detector action in a general way when operated with and without a grid condenser and leak resistance. The purpose of the following discussion is to explain precisely how greater efficiency from the detector is obtained by the grid condenser method of detection.

It should be clear that the various regenerative circuits can be set into self-oscillation, providing the plate and grid circuits are coupled sufficiently close. The sequence of events when local oscillations are occurring at a frequency slightly different from the signal frequency is graphically illustrated in Fig. 192. Curve *C* shows the beat current produced by the interaction of the two sets of oscillations *A* and *B*. Since the principles of heterodyning or beat production are the same whether or not a grid condenser is employed, we may transfer our attention from the beat curve *C* in Fig. 192 to the beat curve *A* in Fig. 196.

It can be seen in either illustration that the curves below the beat curves pertain to the process of detection. Figure 196 shows how the actual grid voltage and plate current alternations are modified somewhat when the grid condenser is used.

Certain facts are now necessary as a foundation for the study of detector action.

The voltage applied to the grid of the detector by the beat current is an alternating voltage—a voltage varying at one instant from a positive value to a negative value at the following instant. Curve *A*, Fig. 196, shows the alternating beat current.

When a grid is charged by an alternating voltage a larger amount of current flows in the grid circuit during the positive alternations than during the negative alternations. This is because the negatively charged electrons emitted by the hot filament, called the *space charge*, are controlled by the grid potential in the following way:

When the grid receives a negative charge, due to the repulsion of *like* charges, the grid will repel electrons and a smaller number will

actually reach the grid; likewise a smaller quantity will be available for attraction by the positive plate. Electrons reaching the plate must pass between the meshes or wires forming the grid; hence, any reduction in electron movement to the grid will lower the current flowing in the grid and plate circuits.

If the next alternation of beat current places a positive charge on the grid, the grid attracts more electrons to itself and consequently the current flowing in the grid circuit will increase. It follows that an increased quantity of electrons will move toward the plate and the plate current will be increased.

The alternating potential applied to the grid has a direct influence on the amount of current flowing both in the grid and plate circuits. The current we refer to is *conduction current.* It is to be observed that in the tube the grid current can flow in only one direction, and the plate current will flow in only one direction for the reason that both grid and plate are relatively cold electrodes compared to the filament and do not of themselves emit electrons. According to the electric charge upon their respective surfaces they can act either to attract or to repel the internal stream of electrons, but cannot establish a current flow in the reverse direction by throwing off electrons.

It should now be easy to see that when grid condenser C_4 in the diagram of Fig. 194 is connected in series with the grid, the grid circuit is insulated and will block the flow of a pure d-c. current. Hence, the electrons constituting the conduction current will be obstructed in their free movement away from the grid electrode and through the external grid circuit. The condenser having the correct capacitance will allow the passage of the alternating e.m.f. carrying the signal to the grid. The alternating e.m.f. will reach crest values if the condenser capacity is carefully selected.

Since the conduction current in the grid flows continually while the tube is in operation, electrons will accumulate steadily on the grid and build up a negative charge on the condenser plate nearest the grid. The electrons can be made to leak off gradually by furnishing a path of high resistance shunted across the condenser. Grid leak resistance R_1 is provided for this purpose.

If the correct amount of resistance is used, perhaps one or two million ohms or higher (one million ohms equals one megohm), the grid current flow can be so closely regulated that a certain quantity of electrons will always be held back on the grid. This action places a constant negative charge of definite value on the grid; consequently, the normal working potential of the grid is slightly negative to begin with.

These preliminary facts in mind are a basis for the explanation of

the detector action with the grid already charged to a slight negative potential, as shown by point X_2 in curve B of Fig. 196.

The first negative alternation A_1 of the beat current will cause the grid voltage to lower from X_2 to B_1; that is, a heavier negative charge now rests on the grid. The plate current always repeats the grid voltage variations; therefore, the plate current will decrease from its normal value at X_3 down to C_1.

The positive alternation A_2 of the beat current is next impressed on the grid, and its effect will be to reduce the negative grid charge from B_1 to B_2, as the grid is now becoming less negative than before. As can be readily seen from this curve, the positive alternation A_2 did not cause the grid actually to become positively charged, for, if it did, the curve B_2 would be drawn upward to extend above the zero axis. The resultant grid potential as shown by B_2 is the difference between the magnitude of the negative charge resting on it at that instant and the magnitude of the positive charge applied to it by alternation A_2.

Now investigate what takes place during the next oscillation of beat current. First, the grid is charged by negative alternation A_3. The negative voltage remaining on the grid at this moment, combined with the negative charge A_3, will cause the grid to become more negative than in the previous cycle, as shown by the lowering of the voltage from B_1 to B_3. Again, the plate current will decrease to C_3 in accordance with this negative swing in grid potential. Next, the grid is charged by positive alternation A_4, causing the grid potential to rise from B_3 to B_4. At this juncture we must observe that although positive alternation A_4 is larger than A_2 of the previous cycle, the grid voltage is now more negative, as indicated by the lowering of the grid potential from B_2 to B_4.

This result is to be expected, for, as already explained, while the grid is alternately charged by signal voltage, electrons are continually collecting on the grid, in extremely small quantities, of course, when the grid is negatively charged, but in larger quantities when positively charged. The grid becomes increasingly negative because the grid condenser blocks the movements of these electrons and the high resistance leak is of such value that only a limited quantity is allowed to leak off.

In this way the grid condenser is automatically adjusting the grid potential. The grid is worked below its normal negative value whenever the oscillations impress an alternating e.m.f. upon it. That is clearly shown by the dotted line in graph C, Fig. 196, indicating the average of all alternating potential changes occurring on the grid for the duration of one beat, as from X_2 to Y_2. These alternating poten-

tials of grid to filament are repeated in the plate circuit as shown by the rise and fall in plate current in graph *C*. The dotted line indicates the average change produced.

At the cessation of the beat current indicated at Y_1 in graph *A*, the grid will no longer be charged from this source; hence, the excess electrons collected by the grid during the beat will leak off through the path provided by the high resistance. If the restoration of the grid to its normal negative voltage is accomplished, the grid potential will return to Y_2. The grid will now be in a normal condition again to be charged by another group of alternating pulsations of beat current. The plate current will repeat by returning to normal, indicated at Y_3.

If, on the other hand, the grid resistance value selected is too high, the electrons will pile up on the grid in increasing numbers and the grid cannot then return to normal at the termination of each group of beat current oscillations. The result of this may be that the grid potential becomes sufficiently negative that it actually blocks or cuts off the electron flow to the plate. The tube action then will become erratic, or possibly the plate current will drop to zero, rendering the tube inoperative. The proper leak resistance value must be selected for a given set of circuit conditions to prevent the possibility of paralyzing the tube.

The practical application of this action may be summarized as follows:

The variations or alternations of plate current from X_3 to Y_3 are infinitely too rapid for the telephone diaphragms to follow, and the extent to which the diaphragms will be deflected from their normal position will correspond to the average change which the current undergoes throughout the duration of a group of oscillations, as indicated by the dotted line in graph *C*.

It should be noted that the extent to which the diaphragms are deflected does not depend on the total current flowing through the telephone magnet coils, but on the difference between the normal steady flow when no signals are received, shown by X_3, and the average plate current flowing, shown by the dotted line, when signal oscillations are being received.

Again, examination of the curve in *C*, Fig. 196, shows that we have already reduced the steady current passing through the telephones to a considerable degree by swinging all of the current variations over to one side of normal; that is, all of the increases and decreases occur below normal value.

If we desire to know exactly how much the plate current is changed when no condenser or grid leak is employed, illustrated by the curve *D*

in Fig. 192, it would be necessary to compute the difference between all of the increases above normal and the decreases below normal. The actual change in plate current from its normal value cannot be as great as when the grid condenser is used.

It is obvious, then, that the difference between the normal steady current passing through the receivers when no signals are received and the average current passing through them from a group of beat oscillations determines the strength of the sound produced by the receivers. It should be easy to decide from the foregoing facts that the greatest

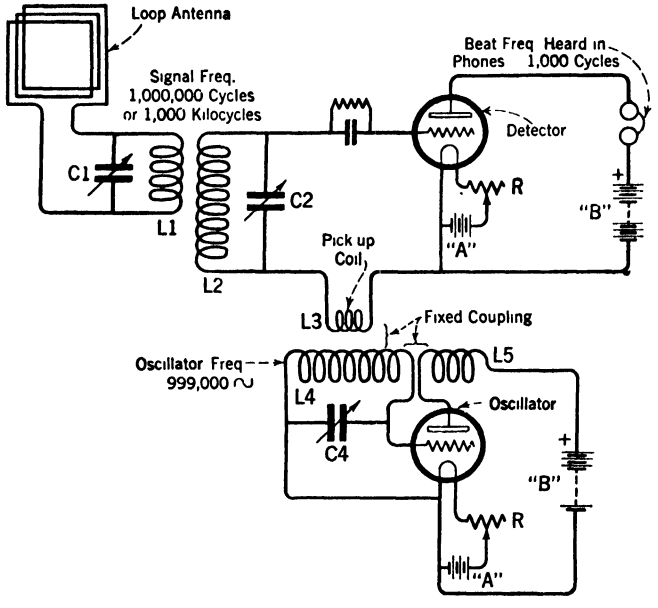

FIG. 201.—The method of arranging a separate oscillator circuit for beat or heterodyne reception.

current change can be gained (and the loudest signals produced) by utilizing the grid condenser and grid leak method of detection.

The final effect on the telephone current will be that of the graph *D*, Fig. 196, in which successive curves *a*, *b*, and so on, represent the average effect of the individual groups of pulses shown in graph *C*.

A Heterodyne Receiver—With Separate or External Oscillator.—In the heterodyne or regenerative beat receiver circuits heretofore described, the local frequency was generated and detection accomplished in the circuits of a single vacuum tube. We now come to a regenerative beat receiver in which the local frequency is generated by an external

oscillator, and the beat currents are detected in an inductively coupled detector circuit.

For example, the system employs two separate vacuum tubes the circuits of which are shown in Fig. 201. The oscillator-tube circuit is constructed similar to the inductive feed-back generative receiver illustrated in Fig. 194, with the exceptions that the grid condenser and leak are not required, because the tube in this case is not operated with a detector characteristic. A higher plate voltage is used, such as would give the oscillator tube an amplifier characteristic, the coupling is fixed, and the grid return lead is connected to the negative side of the "C" battery for the proper biasing of the tube.

The connections for this separate heterodyne receiver show that a simple detector circuit is used, comprising the tuned input circuit L_2C_2 and a small pick-up coil L_3 in the grid return lead to obtain magnetic coupling with the grid coil of the oscillator.

The usual arrangement in commercial receivers is to place one stage of radio-frequency amplification preceding the detector tube. In this case coil L_1 would then represent the plate coil or primary of a radio-frequency transformer.

The heterodyning or combining of the two sets of frequencies in Fig. 201 produce a resultant frequency (beat current) and the only difference in action between this and the circuits previously described is the manner in which the local oscillator frequency is introduced into the detector circuit.

The action of this circuit is now described. Let us suppose that alternations of current carrying the radio signal are flowing through L_1. The varying magnetic field around L_1 will induce an alternating e.m.f. in L_2. Condenser C_2 is adjusted to resonate the detector circuit to the frequency of the signal. The signal oscillations passing to the grid, impress an alternating potential between grid and filament. Assume that the frequency of the signal is 1,000,000 cycles per second.

Now, for convenience, let us suppose that the oscillator frequency as determined by the capacity of condenser C_4 is 999,000 cycles per second. The alternating magnetic field surrounding L_4 induces an alternating e.m.f. of similar frequency in pick-up coil L_3. The potential variation across this coil sets up an oscillating e.m.f. of 999,000 cycles in the detector circuit simultaneously with the incoming oscillations of 1,000,000 cycles. The resultant current frequency is the numerical difference between the two sets of oscillations, or 1000 cycles. The beat frequency is impressed upon the grid as an alternating e.m.f., wherein detection and amplification take place in the usual manner.

There are two distinct operations necessary in adjusting the circuits to tune the receiver from one station to another:

(1) Condenser C_2 is adjusted to place the input circuit of the detector in resonance with the incoming signal.
(2) Condenser C_4 is adjusted to control the oscillator frequency and, therefore, the beat note frequency.

Super-Heterodyne Receiver with Second Harmonic Oscillator.—The super-heterodyne method of reception is one in which current is generated by a local oscillator at a frequency which, after combining with the original signal current, will be converted into an intermediate-frequency beat current. The intermediate beat current, which is low in frequency, can be amplified with minimum loss due to inter-electrode capacity, and then passed through the detector tube to be converted again, this time into an audio-frequency current which is capable of reproducing the original signal wave in the phone or loudspeaker.

The second harmonic oscillator is operated on the principle that an oscillating vacuum tube circuit generates a current of fundamental frequency, and also produces other oscillations which are multiples of the fundamental frequency. These upper frequencies in multiples of the fundamental are called *harmonics*, several of which are strong enough to be utilized in the same way as the fundamental.

A circuit which is designed to pick out, that is, to tune in resonance with the second harmonic energy, is shown in Fig. 202.

The sensitivity of the receiver is enhanced by placing one stage of radio-frequency amplification before the oscillator-detector tube because a larger signal voltage is then applied to the oscillator grid. Another feature of the circuit is the reduction in the number of tubes, brought about by the fact that the radio-frequency tube was found quite capable of performing the double function of amplifying both the intermediate current and the incoming signal current. This is known as a *reflex* action.

By adjusting the condenser C_2 the detector-oscillator tube is placed in a state of oscillation at a frequency equal to one-half of the incoming frequency plus or minus one-half of the intermediate-frequency. Assume that the tuned coils of the oscillator have approximately several times the inductance of an oscillator designed for a frequency of 1,000,000 cycles. Then, for the same capacity of the condenser used to tune the coil, the oscillator with the larger inductance will have a fundamental frequency of 500,000 cycles and a second harmonic of 1,000,000 cycles. The energy in the second harmonic is strong enough to be utilized for beating with the continuous waves of the incoming signal.

If the intermediate amplifier transformers are designed to pass a beat current having a frequency of 50,000 cycles, the oscillator coil system must be such that it will function as follows:

Suppose that the signal wave received has a carrier frequency of 600,000 cycles, one-half of which is 300,000 cycles. The intermediate amplifier circuit tunes to 50,000 cycles, as above stated, one-half of which is 25,000 cycles. The difference between half the intermediate-

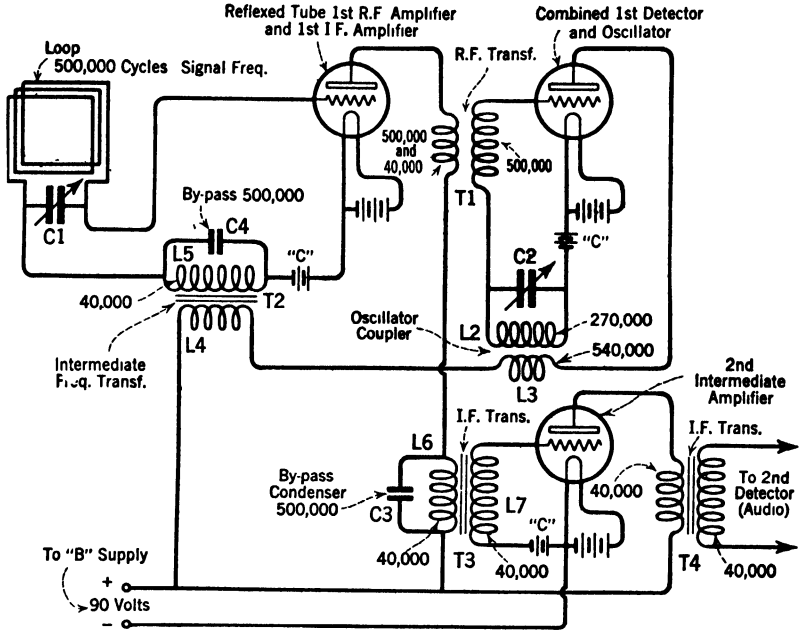

FIG. 202.—A fundamental circuit of a second harmonic super-heterodyne receiver with the first tube reflexed. The incoming frequency from a certain transmitter, the oscillator frequency, and the intermediate frequency, are denoted according to the circuits through which they pass. This circuit is simplified by showing the negative "B" return lead connected to the filament of one vacuum tube only, whereas it actually connects to the filaments of all tubes.

frequency and half the signal frequency is 275,000. The second harmonic of 275,000 is 550,000 cycles.

Now, the 550,000 cycles generated as the second harmonic of the oscillator combine with the 500,000-cycle signal frequency to produce a beat current of 50,000 cycles, which is the frequency required to pass through the intermediate transformers.

The oscillator is also generating 275,000 cycles and multiples of this fundamental (for example, the third, fourth and higher harmonics), but

these frequencies are not being utilized, because the circuits are only in resonance with the second harmonic of 550,000 cycles.

Let us cite another example to make this action clear:

Suppose the intermediate transformers are built to peak at 40,000 instead of 50,000 cycles. Let the signal received have a carrier frequency of 500,000 cycles. The difference between half of the input signal frequency, or 250,000, and half of the intermediate-frequency, or 20,000, is equivalent to 270,000 cycles. Due to the fact that any oscillating vacuum tube circuit generates certain harmonics in addition to the fundamental frequency, the second harmonic value of 270,000 would be 540,000. This frequency, interacting or heterodyning with the signal of 500,000 cycles, produces the beat current of 40,000 cycles, which in this case is the desired intermediate-frequency. The diagram indicates the paths of the different frequencies.

The purpose of shifting the signal to an intermediate-frequency is that the inter-electrode (grid to plate) tube capacity is felt especially in the amplifier tubes below 600 meters. The inherent tendency of the tubes to oscillate at the low waves or high frequencies has placed a restriction on their general use in radio-frequency amplifying systems. It was for this reason that Armstrong developed a system which would convert the high frequencies to the lower intermediate range, and then, after one or more stages of intermediate amplification, pass the signal current to the detector (now called the second detector) to be altered into an audio-frequency current.

The action of the circuit, shown in Fig. 202, is described as follows: A loop antenna is used to absorb energy from the passing electromagnetic wave, this inductance being tuned by the variable condenser C_1. The grid of the first tube when acting as a radio-frequency tube is charged with the signal voltage, causing alternations of plate current to flow through the primary of radio-frequency transformer T_1, which, in turn, sets up an alternating e.m.f. in the secondary. Oscillations of the signal frequency now flow through the oscillator-tuned circuit, while the oscillator is simultaneously generating current at such frequency that its second harmonic beating with the incoming frequency will produce the desired intermediate-frequency. The second tube in the circuit now acts as a combined first detector and oscillator to convert the radio-frequency into an intermediate-frequency.

In this reflex arrangement the intermediate current will be amplified through the first tube which received the original signal current. The intermediate beat current flows as a pulsating direct current through coil L_4, which is magnetically coupled to coil L_5. Coils L_4 and L_5 comprise intermediate transformer T_2. Since L_5 is connected in

the grid circuit of the first tube, the alternating e.m.f. induced in it by the intermediate current in L_4 will be applied to the grid, and the energy then being amplified in the tube is passed on to the plate circuit. The amplified pulsations of intermediate current flow through T_1 and through primary coil L_6 of the second intermediate transformer T_3. An alternating e.m.f. of beat frequency is induced in L_7 and is applied between grid and filament of the second intermediate amplifier tube. The beat frequency amplified therein is again passed through another intermediate transformer T_4, the secondary of which is connected to the grid and filament of the second detector (audio detector). The circuit will from this point on follow the familiar detector and two stage audio-amplifier.

Coils L_3 and L_2 represent the oscillator coupler to furnish the necessary coupling for the oscillator feed-back action. The plate circuit of the oscillator also carries primary coil L_4, the secondary L_5 returning the intermediate energy to the first tube, thus making the first tube do double duty; first, as a radio-frequency amplifier, stepping up the strength of the signals received by the loop, and secondly, amplifying the intermediate current supplied through transformer T_2.

The bypass condenser C_3 provides a low reactance path for the signal frequency. This is necessary because both the signal and intermediate-frequencies flow in the same plate circuit on account of the reflexing. The intermediate will flow through coil L_6 and the signal current through the condenser. Bypass condenser C_4 is shunted across coil L_5 for the same reason.

The complete circuit arrangement for a six-tube super-heterodyne operating on the second harmonic, according to the principles just outlined, is illustrated in Fig. 203. The entire tuning of the receiver is accomplished by two drum dials; condenser C_1, which tunes the loop to the incoming signal frequency, and condenser C_2, which tunes the oscillator to one-half the incoming frequency plus or minus one-half the intermediate-frequency.

A radio-frequency transformer, called an antenna coupler, may be employed instead of the loop. In this case, the two leads running from C_1 would connect to the secondary terminals of the transformer, while the primary would connect to a short antenna wire and to ground.

The efficiency of the super-heterodyne rests primarily in the construction of the intermediate transformers. They must all have the same characteristics; that is, they must be peaked alike so that their resonant regions will lie within the same frequency band, but the transformers must act on a whole as a filter for the suppression of energy at other frequencies. In other words, a transformer peaked at 45,000

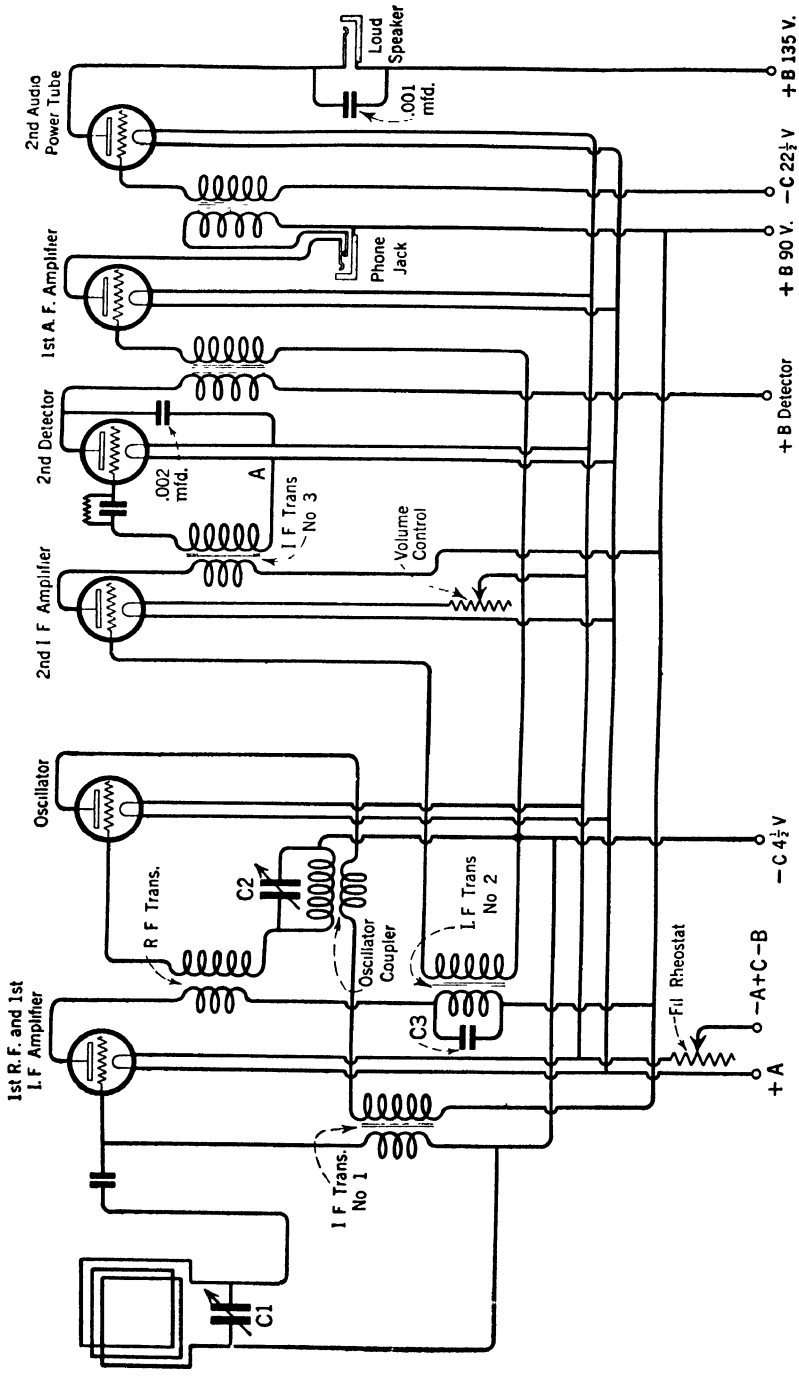

FIG. 203.—A schematic diagram of a six-tube super-heterodyne, second harmonic, receiver employing a loop aerial.

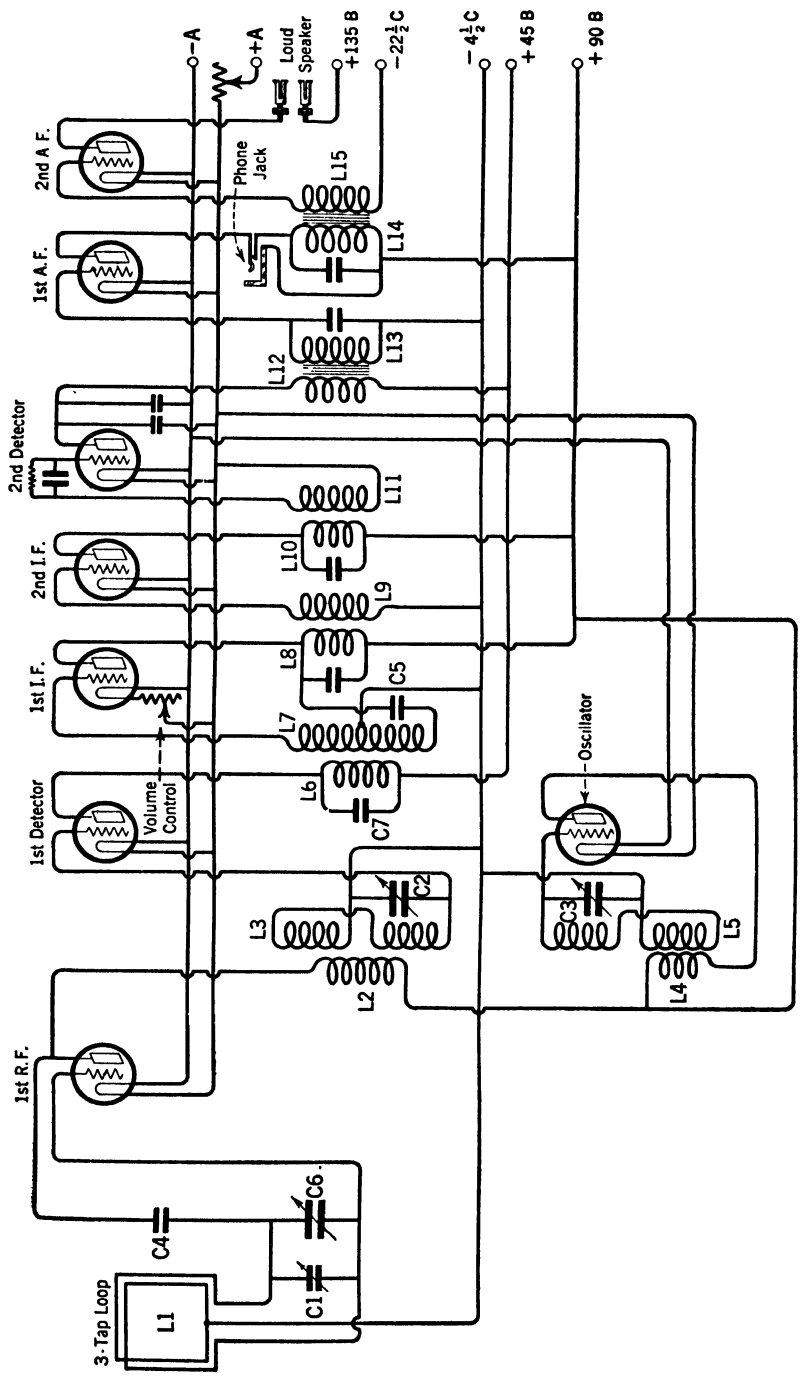

FIG. 204.—Schematic diagram of an eight-tube super-heterodyne receiving circuit.

cycles, the intermediate peak frequency, must also cover the audio-frequency band with equal amplification, so that none of the harmonics or over-tones that appear in the original wave will be cut off. The audio range has a practical limit of about 7000 to 10,000 cycles and a theoretical limit of about 20,000 cycles.

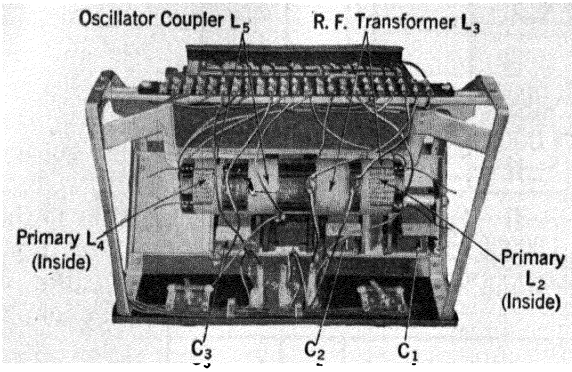

FIG. 204*a*.—Interior view of eight-tube super-heterodyne receiver.

Eight-Tube Superheterodyne with Separate Oscillator.—The circuit arrangement for an eight-tube superheterodyne is illustrated by Fig. 204. A photograph of this receiver is shown in Fig. 204*a*. This circuit differs from that of the six-tube second harmonic circuit described previously in that there is no reflex action and a separate oscillator tube circuit utilizes the fundamental frequency of the locally generated current (and not one of its harmonics) to

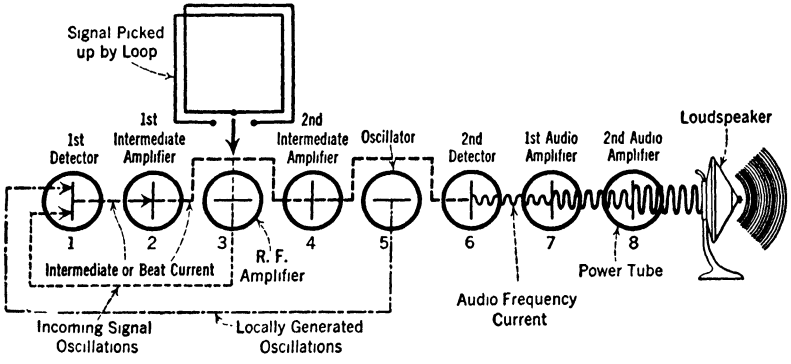

FIG. 205.—A diagrammatical method of showing vacuum-tube sequence, path of different currents, and amplification of a signal in an eight-tube super-heterodyne receiver.

heterodyne with the signal frequency in order to produce the required intermediate current.

The vacuum-tube sequence and path of the different currents through them are shown diagrammatically in Fig. 205. In the super-heterodyne receiver the tube sockets are not arranged in numerical order according to their function, but are positioned to obtain the most efficient results.

Referring to the illustration, and counting from the left, the third tube receives energy from the loop and acts as a stage of tuned radio-frequency amplification. The output of this tube goes then to the first tube on the left, which is the first detector. The latter tube functions to combine the signal and oscillator frequencies to form the resultant intermediate-frequency. The fifth tube is the local oscillator, and it feeds its energy to the first tube simultaneously with the signal currents received from the third tube, or radio-frequency amplifier.

The intermediate-frequency output of the first detector feeds to the second tube, which is the first stage of intermediate amplification. The intermediate-frequency, after passing through the second tube, is carried then to the fourth tube, or second intermediate stage of amplification.

The initial feeble current induced in the loop by the signal wave has been greatly magnified after the heterodyning process and by passing through the successive stages of amplification. The energy is now of sufficient strength to be introduced as a fluctuating voltage into the input circuit of the sixth tube, or second detector.

The second detector is the one generally known as the audio detector. This tube converts the intermediate into an audio-frequency current. The audio current is now carried through tube 7 to be stepped up through the first stage of audio amplification. The output of this tube is impressed on the grid of the last or eighth tube through the audio transformer which couples tubes 7 and 8.

The last stage usually employs a power tube, either a *UX* 120 type, or *UX* 171-A; or the output of the first audio amplifier may lead to the input of a special power amplifier rectifier circuit employing one *UX* 210 super-power tube. When either of the latter two types of tubes is used, the loudspeaker circuit is coupled to the output (plate) of the tube through a 1:1 ratio audio transformer.

The amplification of the signal through the intermediate stages can be made to give a uniform response over a sufficiently broad band of frequencies to furnish good quality of speech or music, which effect cannot always be accomplished in the average audio transformer-coupled amplifier. After suitably amplifying the intermediate current, the second detector is required to obtain the audio current which will produce the original signal.

An intermediate transformer is built similar to a radio-frequency transformer, except that more wire is used and fixed bypass condensers are shunted across the coils to resonate the circuit to the particular intermediate-frequency for which it is designed. The bypass condenser C_7,

shown in the diagram, provides a path of low impedance for the alternating component of the beat current, to which the primary coil L_6 of the intermediate transformer would offer a high reactance. The d-c. component carrying the signal wave passes through the primary coil and the radio-frequency current finds it less difficult to take the condenser route.

By inserting a small iron core, the intermediate transformers may be made to work on a low peak value, for instance, 45,000 cycles, without winding an excessively large number of turns of wire, which would increase the distributed capacity of the coil. A high distributed capacity is undesirable, because it tends to bypass the high frequency current, resulting in a loss of signal energy.

The coils of the oscillator and the radio-frequency transformer are astatically wound. This is shown in the schematic diagram, Fig. 204, and also in the photograph, Fig. 204*a*. The turns of both L_3 and L_5 are wound beginning at the center in an outward direction, completing half the winding, with the wire then brought back to the center again, the second half being wound in the opposite direction and toward the other end of the coil. Both sections are connected in series, but are so placed that the magnetic field produced around adjoining sections will be opposed in space and neutralize the inter-coupling effects between other parts of the circuit. The coils have the necessary self-inductance to match the condenser capacity in order to give the circuit the electrical constants required to cover the frequency range of the receiver. The plate coils L_2 and L_4 are mounted within and toward the far end of the secondary coils.

Due to the inherent tendency of a radio-frequency tube to oscillate, the first radio-frequency tube and the first intermediate tube are both neutralized. This arrangement is shown in Fig. 204 by the neutralizing condensers C_4 and C_5. The grid of the radio-frequency tube is connected to one side of the loop, while the opposite end of the loop is connected back to the plate through C_4. The grid return lead running to the negative " C " battery is connected to the center tap on the loop. Thus the loop is divided into two equal parts. The inductance of each portion of the loop is balanced with both the neutralizing condenser capacity and the inter-electrode capacity of the tube so as to prevent radio-frequency coupling between the tube elements. This also explains the use of the so-called *three-tap loop*. The arrangement is similar for inductance L_7 and condenser C_5.

The 8-Tube Super-heterodyne Circuit—Outline.—The circuit shown in Fig. 204 is set into operation by closing the filament switch and adjusting the rheostat until the correct terminal voltage is supplied

to the filaments. The tuning of the circuit is accomplished by only two controls, or drum dials.

Variable condenser C_1 tunes the loop. Variable condenser C_2 tunes the radio-frequency transformer secondary inductance L_3. The loop circuit and the radio-frequency circuit are tuned simultaneously to resonance with the signal frequency, because C_1 and C_2 are connected in tandem by attaching a shaft to each set of rotor plates with coupling provided through a universal joint, the latter permitting the maintenance of proper alignment of the shafts.

Variable condenser C_3 is set to produce the local oscillator frequency which will beat with, or heterodyne with, the incoming signal frequency. The oscillator generates continuous oscillations by the action of the plate coil L_4 feeding back energy into the grid coil L_5.

The oscillator grid coil L_5 is inductively coupled to the first detector grid coil L_3, and it is in this manner that the local oscillating current is introduced into the tuned circuits of the first detector. The signal current is also induced in coil L_3, which is the secondary of the radio-frequency transformer. The primary L_2 of this transformer receives the output current of the first radio-frequency tube to which the loop circuit is connected.

If C_3 is set to produce a frequency slightly different from the signal frequency flowing in L_3, the two currents will interact to produce the resultant intermediate current. The intermediate pulsations are repeated in the plate circuit of the first detector and flow through primary coil L_6 of the first intermediate transformer. The alternations of plate current induce an alternating e.m.f. in the secondary L_7 which is applied to the grid of the first intermediate tube.

Again we find that the intermediate current pulsations flow through the primary L_8 and induce an alternating e.m.f. in amplified form in secondary L_9 of the second intermediate transformer. The intermediate current passes to the grid of the second intermediate amplifier tube and the signal wave is again amplified in the output circuit of this tube. The output current flows through primary coil L_{10} and induces an alternating voltage in secondary L_{11} of the third intermediate transformer.

The grid of the second detector now receives the intermediate current pulsations, and, through the action of the grid condenser and grid leak, the intermediate energy is converted into an audio-frequency current which flows through the primary L_{12} of the first audio transformer. The principles involved in the remainder of the audio amplifying system are similar to those in the intermediate amplifying system, except only that the frequency of the current differs.

The first detector can be said to act as a frequency changing device, and this tube as well as the second (audio) detector, is operated at a low plate voltage.

Let us again explain briefly that the tube which produces the intermediate current is called the first detector or a *mixer*, because within its circuits the radio-frequency signaling current operating at low wavelength is converted into intermediate-frequency current, that of long wavelength. For example, if the incoming signal is 300 meters, or 1,000,000 cycles, the oscillator can be adjusted to produce an intermediate current of 6666 meters, which is the equivalent of 45,000 cycles. The first detector acts to change the low waves or high frequencies into a current of lower frequency, which is more suitable for amplifying, because of the tendency of the radio-frequency tubes to oscillate at comparatively low wavelengths below 600 meters, as previously explained. The self-capacity between the tube elements is not at all troublesome from 1000 meters up.

Intermediate Frequency.—To gain a clearer understanding of the magnitude of the intermediate-frequency as related to the other frequencies is the purpose of the following observations.

There is no line of demarkation to identify the intermediate from the higher radio-frequencies. On this account we often observe that *intermediate* is followed by the modifying words *radio-frequency*, forming the expression *intermediate radio-frequency*. Radio-frequencies lie above those corresponding to normally audible sound waves, which ordinarily have, for the purpose of this discussion, an upper limit of approximately 10,000 cycles.

A *modulated signal* wave absorbed either by a regular antenna or loop antenna consists of a radio-frequency carrier wave, *modulated* so that the amplitudes of the continuous waves are varied in accordance with a signal wave. There are two frequencies present:

(1) The frequency of modulation. It represents the intelligence to be communicated and is usually shown as an irregular curve forming an envelope enclosing and varying the amplitudes of the continuous radio-frequency currents.

(2) The frequency of the carrier wave. The radio-frequency current is called the carrier wave and has the same frequency as the original unmodulated wave employed in radio transmission for the purpose of propagating electric waves through space.

Let us cover a little more fully what is meant by stating that the function of a detector is to reproduce the original signal wave. The

detector tube is operated on a non-linear portion (at the bend) of its characteristic curve, thereby converting a modulated radio-frequency current into a modulated direct current; the modulated direct current is an audio-frequency plate current variation which coincides with the contour which represents the modulation component of the signal wave of the received carrier frequency.

From the explanations given in the super-heterodyne process of reception we know that the local oscillator frequency is combined with the received carrier frequency, and, by this interaction, the carrier frequency is converted to an intermediate-frequency. Since the carrier frequency is modulated, the intermediate current will also be modulated and its wave form (of pulsations) will coincide with, and convey, the original signal.

Consequently, the function of the audio detector is to separate the intermediate radio-frequency component from the modulated or audio component. The modulated component is repeated in the detector plate circuit in the form of audio pulsations which are suitable to operate the telephone receivers or recording devices, such as a tape or a relaying instrument. Or an audio amplifier may be connected to receive the output of the detector.

We may conclude from these facts that, while the magnitude of the intermediate-frequency in the commercial super-heterodyne receiver, for example, may be 45,000 cycles or higher, the intermediate frequency in general can be considered any frequency to which the carrier is converted by the process of heterodyning. Hence, the intermediate-frequency will lie between that of the modulation frequency and the carrier frequency employed by the distant transmitter.

Regenerative Amplification.—We have already set forth that the three-electrode vacuum tube acts as an amplifier of radio-frequency current. A different application of the amplifier principle is used in the regenerative system of amplification whereby the strength of the incoming signals is increased within the same tube. The circuit is illustrated in Fig. 193, showing one vacuum tube employed for both detection and regenerative amplification. The fundamental theory is similar to that given in the description of the " oscillator " in the paragraphs relating to the regenerative beat receiver.

The functioning of the regenerative detector is understood from the consideration of a few preliminary facts:

(1) The reaction of two independent or neighboring electrical circuits upon each other is called *mutual induction.* The circuits must be so placed with respect to each other that the magnetic field due to the current in either of them will produce an effect in the other. In the

case of a regenerative detector the plate and the grid are the respective circuits and the magnetic field produced by the plate current affects the grid circuit.

(2) Through the use of a grid condenser and grid leak resistance in the detector tube, during the reception of damped or modulated c.w. oscillations, the plate current varies simultaneously at an audio and radio-frequency. The grid potential is so regulated by the grid condenser that the increase of plate current for each incoming half-cycle of energy will exceed the decrease, or vice versa, resulting in pulsations of current in the plate circuit capable of affecting the telephone receivers.

(3) Any change in grid potential due to signal oscillations, no matter how small, will be repeated in the plate circuit by relatively large changes in plate current. If, during the reception of the signal, the radio-frequency component of the plate current can be re-impressed upon the grid circuit in synchronism with the incoming signals, the energy of the signal will be amplified, or regeneration will result.

The fundamental principle upon which regeneration is based is the phenomenon of mutual induction, which in this case is utilized as a process of supplying energy from one part of the circuit to another part of the same circuit. The most important requisite is that the transfer of energy from one circuit to the other shall be in such direction that it will reinforce the original signal oscillations. Otherwise, regeneration will not take place.

The diagram in Fig. 193 shows the feed-back coil L_3 by which energy from the plate circuit is inductively conveyed into the grid circuit. When the coupling is made variable, as by moving the plate coil L_3, the coil is then known as a *tickler* coil. There are two practical methods of varying the coupling.

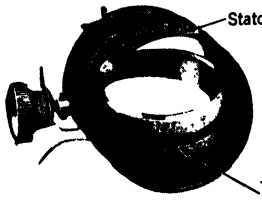

FIG. 206.—Showing how mutual inductance is varied between tickler coil (inner rotor coil) and the grid coil (outer stator coil) by angular changes.

(*a*) The tickler coil can be mounted on a shaft connected to a dial and placed within the secondary (grid) coil, as shown in Fig. 206. The mutual inductance between the plate and the grid circuits depends upon the angular relationship of the two coils, which may be continuously varied by rotating the plate or tickler coil through a 90-deg. radius.

(*b*) Another very efficient arrangement is to mount the tickler coil outside of the grid coil. The coupling can be varied by moving the

tickler coil in a lateral direction toward or away from the grid coil. The bracket supporting the tickler coil and the leverage necessary to permit it to be moved in and out of inductive relation with the grid coil (not shown) is seen in Fig. 206*a*. When regeneration is not desired, the tickler coil can be moved several inches away and entirely out of effective relationship.

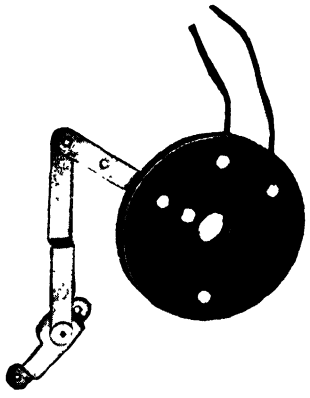

FIG. 206*a*. — A tickler coil mounted to permit lateral movement. *The coil can be in and out of inductive relation to the grid coil (not shown).*

Practically all of the explanations and analysis of the regeneration phenomenon may be classed under two heads:

(1) That regeneration is merely a voltage amplification, effected by the condition of the reimpressed voltage and the original signal voltage.

(2) That regeneration produces an equivalent reduction in the resistance of the grid circuit. This explanation, which is rather more difficult to understand than the first one, is that the equivalent resistance of the grid circuit decreases as the tickler coupling is increased, but not in a proportional manner. This is obvious, for when operating a circuit of this type we find that a different tickler adjustment is usually required when shifting from one wavelength to another.

Explaining classification (1), we can consider the principle of utilizing some of the energy liberated in the plate circuit to boost up any oscillating current existing in the grid circuit. The oscillations in the grid circuit due to the transfer of energy from the plate circuit cause the grid voltage to build up the plate energy again and liberate a still greater amount of power to the grid. The principle is somewhat analogous to that employed in a machine gun, where some of the energy liberated in the barrel by the explosion of the cartridge is used to eject the empty cartridge and replace it with the next cartridge ready to fire.

Let us focus our attention on the elementary diagram shown in Fig. 193, where the oscillatory circuit L_2C_2 is shown connected to the grid and filament of the tube, and the regenerative (tickler) coil L_3 is inductively coupled to L_2. Owing to the mutual inductance between L_3 and L_2, it is evident that any current oscillations in the former will induce similar oscillations in the grid circuit.

Let us presume that the coupling between the regenerative coil L_3 and the grid oscillatory circuit is adjusted to zero, either by moving the

coil L_3 to a remote position or by turning it at right angles to L_2. We know that under these conditions feeble oscillations in the plate circuit will induce similar oscillations in the oscillatory circuit, but of greater amplitude than the original signal oscillations. For simplicity, assume that an incoming damped oscillation, such as would be received from a spark transmitter, sets up an oscillatory current in the antenna inductance L_1 of the same frequency and damping characteristics as the original wave.

Through the magnetic coupling between L_1 and L_2, the energy is transferred to L_2, setting up therein a damped oscillatory current. The induced e.m.f. across C_2 will alternate and this varying alternating potential applied to the grid produces large alternations of plate current at the same frequency as the oscillations in circuit L_2C_2. The alternating component of the plate current flowing through L_3 induces an alternating e.m.f. in coil L_2.

When the circuits of L_3 and L_2 are properly constructed, this induced alternating e.m.f. is in phase with the oscillatory e.m.f. in L_2C_2, due to the original signal. In other words, power is synchronously supplied by the plate circuit to the oscillatory grid circuit which compensates, in a measure, for some of the energy loss due to the oscillations overcoming the resistance of the grid circuit. The result is that the duration or persistency, and also to some extent the amplitude of an incoming signal oscillation, will be increased.

Assuming that the strength and duration of the impulses given to the grid circuit by the original signal is as shown by curve M in Fig. 207, then the effect of coupling the output to the input might be considered according to classification (2), practically the same as if the damping in the grid circuit were reduced. From the study of spark transmitters, it will be recalled that if the dampi. g of a circuit is lowered by reducing its resistance, then oscillations set up in the circuit will have a freer movement and a greater persistency before they finally diminish in strength and die out. The resulting oscillations in the grid circuit with the damping lowered are shown by curve N in Fig. 207.

It should be understood that the regenerative action is the function of the *degree of coupling* between the grid and plate coils. If the coupling between the plate circuit and grid is made closer, more energy is transferred from the plate circuit to the grid oscillatory circuit, in which case the oscillations are correspondingly less damped.

If the coupling is further increased, a stage will be reached when the plate circuit will furnish power to the grid circuit of sufficient magnitude to make up all loss of energy equal to that dissipated or lost as heat in the grid circuit. Under these conditions, it is obvious that any oscilla-

tion started in the grid circuit would continue indefinitely, since there would be no resistance to overcome. The grid oscillatory circuit would act as though it had no damping and the smallest impulse given to the plate current flowing through L_3 would suffice to start the oscillations. Under these conditions the oscillations in the system would no longer be damped, but would become undamped and the tube would oscillate.

When the critical value of coupling is reached, an oscillation started in the grid circuit will be sustained indefinitely when the necessary energy for feed-back is being supplied by a "B" battery or a power unit. If the coupling is increased beyond this critical point, the plate circuit will supply more power to the grid circuit than the grid circuit loses, the oscillations will increase in amplitude, and the tube will gen-

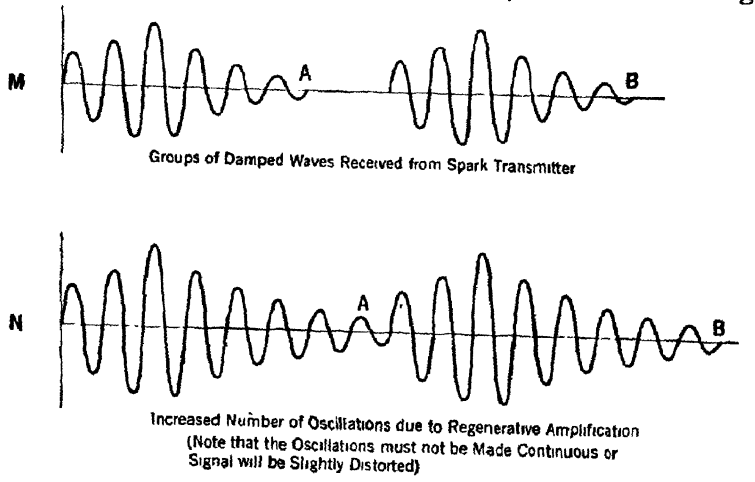

FIG. 207.—Graphs depicting the phenomenon of regeneration.

erate sustained continuous oscillations. This condition is not desirable for regeneration, because, if the coupling is too close, the oscillations for each spark discharge at the transmitter will not decay to zero before the next group of damped oscillations is impressed upon the tube circuits. The truth of this statement can be recognized from the curve N in Fig. 207, where it is shown that the increased number of oscillations due to regeneration have decayed to zero for each wave train group at points A and B. This is absolutely essential, for it will be remembered from the discussions in the first part of this chapter that the greatest strength of signals is obtained from the largest deflection of the telephone diaphragms. This depends not alone on the amount of current flowing through the telephone magnet coils, but upon the *average change or variation* in the strength of the current as well. It is obvious that the

largest *change of current* could not be obtained if the oscillations did not die out or decay at the termination of each group.

The coupling of the plate coil must be such that the regenerative system will not be set into self-oscillation, but will build up the signal strength to maximum amplification.

The theory of regeneration is very closely related to that of the vacuum tube oscillator. In brief, regenerative coupling may be secured by coupling the plate and grid circuits inductively, conductively, or electrostatically. Electrostatic coupling may be furnished by the electrodes of the vacuum tube.

It might be said that a regenerative circuit controlled by a tickler coupling is generally accepted as the most efficient type for spark or modulated continuous wave signals.

Regenerative amplification should be so limited that the tube is kept in a state capable of *regenerating*, but never capable of producing *self-sustained* oscillations, the action being governed entirely by the coupling.

Three conditions have been outlined in which the change of tickler coupling affects the grid. These conditions are summarized thus:

(*a*) Where the feed-back energy is sufficient to increase the amplitude of the plate oscillations.

(*b*) Where the feed-back energy of the plate circuit reaches sufficient strength to equal the loss of energy in the grid circuit.

(*c*) Where the power re-transferred from the plate to the grid through the tickler coupling is greater than the energy lost in the grid circuit.

Now consider classification (2) from the viewpoint of the resistance being changed. This condition is usually referred to in engineering practice as supplying a negative resistance to the circuit. In simple language, it may be explained in the following way. The normal grid circuit has a definite resistance to the alternating current flowing. The term *positive resistance* is applied to the normal opposition which the resistance offers. By progressively lowering the grid resistance, it is apparent that more current will flow, until we could reach the point where the circuit resistance is reduced to zero. Then there would be no opposition to overcome, and the current would flow continuously. Now, going beyond this point, wherein *more energy* flows in the grid circuit than is lost, due to overcoming the normal resistance, the effect is similar to that encountered when reversing the resistance condition of the circuit, as though it were possible to make the resistance of the grid circuit actually *less than zero.* If the normal grid circuit resistance is

considered to have a *positive resistance,* a relative term must be used for the opposite effect. Hence, any condition where the circuit has the effect of possessing less than zero resistance we call *negative resistance.*

In this case, instead of the grid circuit absorbing and dissipating energy, it delivers power to the tube because of the feed-back of energy into this circuit from the plate circuit. Oscillations and regeneration will take place with a so-called negative resistance condition.

To sum up in a few words, more energy is added to the grid circuit than is absorbed by it, the energy being furnished by the " B " battery, or power unit.

It is important to note that in operation the point of critical regeneration is just below where the circuit falls into self-oscillation. If the coupling has been increased beyond critical regeneration, where the circuit breaks into oscillation, it will be necessary to reduce the tickler coupling and again to readjust it. This condition is known as *spilling.*

Classification (1) which treats of regeneration as voltage amplification shows that the ultimate voltage applied on the grid is the sum of the initial applied voltage from the signal and the voltage reintroduced in the grid by the tickler coil. This theory assumes that when the regenerative circuit is brought near the point of oscillation, any voltage impulse on the grid will cause an oscillatory current of large magnitude to flow in the plate circuit, but it will die out (damp out) at a rate depending upon the resistance of the circuit and the closeness of the tickler coupling. This is another way of stating that the voltage built up on the grid in this instance never reaches a value large enough to build up sustained oscillations.

If regenerative action is not obtained, either the connections to the tickler coil or the coupling between this coil and the grid coil should be reversed. The reversal of connection will change the terminals of the coil with respect to the plate of the tube and the positive terminal of the "B" battery or other plate energizing source. The correct connection can be determined only by experimentation. This matter of a tickler coil connection is of utmost importance, because the coil's function controls the phase or direction in which the plate energy is returned to the grid circuit in order to assist the original signal oscillations.

Also, if regeneration is not secured, a checkup on the bypass condenser shunted across the telephones must be made, or across the plate winding of an iron-core audio transformer if the latter is used in an amplifier circuit. If the condenser is not used, the distributed capacity of the windings and phone cords will have to be relied upon in order to bypass the high frequency alternations. The bypass condenser provides a low reactance path for this radio-frequency alternating compo-

nent of the plate current. The direct current component flows through the windings readily.

Effect of Choke Coil and By-pass Condenser in Plate Circuit.—In order to produce the best possible condition of regeneration the radio-frequency alternations of the plate current flowing through the tickler coil must not be obstructed in any way. Remember that the *effect* of a condenser of a predetermined value in the plate circuit of a regenerative detector is to pass a radio-frequency current readily while impeding the flow of a direct current. The radio-frequency current will not usually travel through the primary winding of an audio transformer, or through telephone receivers because of their high impedance, if a more direct and shorter path and one of less opposition is provided by the inclusion of the bypass condenser. The problem, then, for the best reception of speech, is to employ a condenser of such capacity that it will bypass the radio-frequencies, but will not at the same time be so large as to bypass the higher audio-frequencies. In the latter case, if not prevented, some of the audio-frequencies necessary to good reproduction would be lost in this condenser channel. The value of the condenser ranges from about 0.0005 mfd. to never greater than 0.002 mfd.

It will be noticed that in the short-wave beat receivers (they employ regeneration) a radio-frequency choke coil is inserted in the plate circuit before the phones or primary winding of the audio transformer, as explained in the following paragraphs. The position of the choke coil in the plate circuit is shown in Fig. 194. Its inductance value when used in the detector is of the order of 100 millihenrys. While the use of the bypass condenser will offer a low reactance path for the radio-frequencies, yet there is a possibility that this energy might flow through the transformer winding because of its distributed capacity.

Therefore some feature must be incorporated in the plate circuit that will absolutely choke out or actually oppose the radio-frequency current from entering any other part of the circuit than the part where it is required to produce the desired results. In this case, the object sought is to produce the best condition for regeneration. The choke coil will impede the flow of the r.f. alternations and force them through the resonant condenser path, in this way building up the highest radio-frequency voltage across the condenser.

Another basic reason for excluding radio-frequency current from the amplifier circuits adjacent to the detector is that sometimes audio circuits are placed in an unstable condition by the effects of intercoupling. An oscillatory condition is likely to develop whenever, in addition to the normal direct current carrying the audio signal, there is present also

a radio-frequency current allowing the latter to circulate through the power leads supplying the different tubes.

Receiver selectiveness and efficiency are not as high on the very short waves as they are on the long waves. Hence a plate choke coil (or a resistor element, which is sometimes used) is absolutely essential in the short-wave regenerative beat circuit.

If the tickler coil is adjusted beyond the critical point, it is manifested by the tube circuit oscillating, and the observer can determine this condition by touching the grid terminal of the tube with the finger. If oscillations are present, this will cause them to cease and a click will be heard in the telephone receivers.

An oscillating circuit will destroy the musical tone of spark signals and cause the signals to change their characteristic to a rough note.

It is assumed that, in a vacuum tube, any variation of plate current occurs instantly (without time lag) for a given change in the grid voltage, that is, there is no lag in which the energy is transformed through the tube action. This would indicate that the magnetic field varying around the tickler coil will induce an e.m.f. in the secondary circuit approximately at the same instant the original signal current is flowing. It should now be clear why the tickler coupling, or rather feedback of energy from the plate circuit, should be in phase with the original signal oscillations.

The regenerative receiver shown in the diagram is a combination of a two-circuit tuner comprising primary and secondary coils L_1 and L_2 and regenerative (tickler) coil L_3. The whole coil assembly is generally known as a *three-circuit tuner.* The amplification obtainable by this method magnifies the signal about 25 to 50-fold, and is equivalent to a well-designed one or two-stage radio-frequency cascade amplifier. Very weak signals are amplified many more times than strong signals, and herein lies the efficiency of the regenerative circuit.

The number of turns required on the tickler coil L_3 will vary for different transformers. Due to the many variable factors, the predetermination of the size of a tickler coil by formula would be quite complicated. For all practical purposes it may be approximated from the following suggestion: For a wavelength range of 150 to 550 meters, the tickler should consist of about 25 turns of No. 26 d.c.c. wire wound on 3-in. tubing; then, for different sized coils, the correct effect may be obtained by adding or taking off turns experimentally.

The tuned plate circuit method of regeneration does not differ materially from that of the inductively coupled or tickler coil method. Usually a variometer, or some other form of variable inductance or fixed inductance when used with a variable condenser, is inserted in

the plate circuit. The plate and grid inductances are not in inductive relation With this arrangement the necessary coupling for feed-back is obtained from the internal capacity of the tube, that is, regenerative coupling is secured electrostatically.

TYPES OF COUPLING—TRANSFORMER—RESISTANCE—IMPEDANCE.[1] THEORY AND APPLICATION—KINDS OF COUPLING UTILIZED IN RECEIVING AND TRANSMITTING CIRCUITS

Three Types of Coupling. Cascade Amplifiers.—This section will be devoted to the three recognized ways in which the vacuum tube may be connected for amplification of radio signals:

(1) Resistance Coupled Amplifier.
(2) Impedance Coupled Amplifier.
(3) Transformer Coupled Amplifier.

When the plate alternations of one vacuum tube are amplified through the medium of a second vacuum tube the tubes are said to be operated in *cascade.* That is, in the cascade system either a resistance, an inductance (impedance coil) or a transformer serves to impress the alternating component of the plate current of the first tube as an alternating e.m.f. between the grid and filament of the second tube; or, stating it otherwise, the output circuit of the first tube is coupled to the input circuit of the next tube, and so on, if more than one tube is thus used.

Another method by which vacuum tubes may be coupled together is known as the *push-pull* arrangement. Here the input signal energy is impressed simultaneously upon the grids of two tubes connected in parallel arrangement, and the output current of both tubes flows through the same transformer system. A circuit of this type is illustrated in the diagram of the Radio Direction Finder, Fig. 433, where it is shown that the two radio-frequency amplifiers are operated in push-pull.

We shall consider in the following discussions the circuits and functioning of the cascade amplifiers.

Resistance Coupled Amplifier.—The method of utilizing a resistance in common with two associated circuits for the purpose of transferring a signal current to be amplified from the plate of one tube to the grid of the next tube, is shown in Fig. 208. This is called *resistance coupling.*

A three-stage amplifier, in which the coupling is effected by resistors R_1, R_2 and R_3 inserted in the plate circuits, is shown. The operation

[1] Both resistance and impedance (choke coil) coupling utilize capacity take-off or coupling condenser.

of this system is based upon the variable voltage drop produced across the resistance when the plate current varies in strength. In accordance with Ohm's Law for direct current circuits we find, if a varying current flows through a resistance of constant value, that the voltage across the resistance will vary in direct proportion to the current changes in it. Since the alternating component of the plate current varies in accordance with the signal wave form, this energy is applied as an alternating voltage to the grid of succeeding tubes in the following way:

The filaments of tubes 1, 2 and 3 are heated by one "A" battery and controlled by one filament rheostat. Three individual batteries and rheostats have been shown to simplify the wiring of the diagram. The plate circuit of the detector tube comprises " B " battery, B_1, and

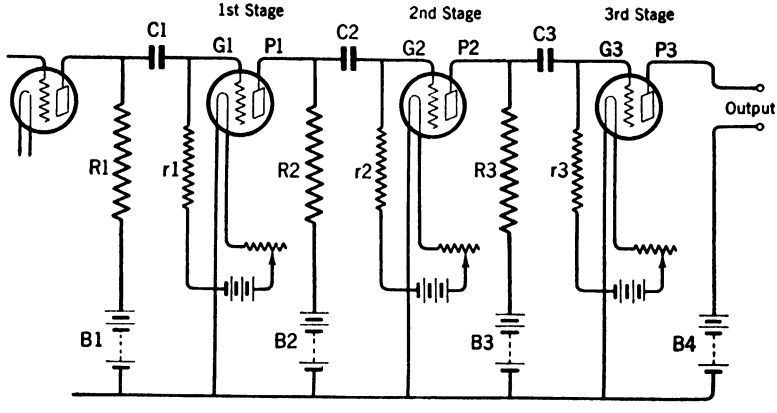

FIG. 208.—A typical resistance coupled amplifier circuit.

plate resistor, R_1 having a high ohmic resistance value, usually of 100,000 ohms.

The voltage across R_1 changes with the alternations of plate current flowing through it. This variation in e.m.f. is impressed as an alternating e.m.f. between grid G_1 and the filament of the first stage amplifier tube. It can be seen from the diagram that in order to impress the e.m.f. between grid and filament, the filament of this tube is connected to one end of R_1 through B_1, and the grid G_1 to the opposite end of R_1. The actual connection from the grid to R_1 includes the insertion of blocking condenser C_1, in order to prevent the positive potential of battery B_1 from being directly applied to the grid. This condenser effectively blocks a pure direct current, but its capacity is sufficiently high to allow it to act as a low reactance path for the alternations of signal e.m.f. Remember that the plate current changes are really not

alternating, as they do not reverse polarity, the current merely rises and falls in value. Due to their rapid changes in value, however, they have the same effect as an alternating current in producing a fluctuating voltage across the plates of the condenser C_1, this fluctuating e.m.f. being applied to the grid G_1.

The fact that condenser C_1 is interposed in the grid circuit G_1 necessitates the use of the grid leak resistance r_1, which is shown connected directly between G_1 and the filament. This high resistance provides a path for electrons which accumulate on the grid to leak back to the filament; that is, the grid resistance permits a withdrawal of direct current from the grid to maintain it at its proper working voltage.

In the action thus far, it is apparent that the output energy of the detector tube feeds into and furnishes the input energy for the first amplifying tube, with the coupling for this transfer of energy provided by resistor R_1.

The first and second stage amplifiers are coupled by resistor R_2 and the action is similar to that between the detector and first stage. The alternating e.m.f. impressed between G_1 and the filament of the first amplifier will be repeated in the plate P_1 circuit as pulsating current which flows through resistor R_2. The alternating component of the plate current will establish a varying voltage across R_2 which is carried to grid G_2 of the second stage through the blocking condenser C_2. Condenser C_2 blocks the direct potential of B_2 from being applied directly to G_2, and r_2 provides the requisite grid leak.

As a result of this arrangement the varying e.m.f. across R_2 is now equal to the e.m.f. developed across R_1 times the amplification of the signal through the first amplifier tube; that is, the audio-frequency gain between the first and second stages of audio amplification is that practically given by the tube amplification factor, as no voltage increase is derived from the coupling.

The plate current alternations flowing from the output P_2 of the second stage are transferred to the input G_3 of the third and last stage through the variation in voltage drop obtained across coupling resistor R_3. The last tube requires blocking condenser C_3 and grid leak resistance r_3, for reasons previously mentioned.

Four "B" batteries are illustrated in the diagram, but as previously mentioned only one is required, with suitable taps, to provide proper working potential for the various tubes. The pulsating current flowing from output P_3 of the last tube, which actuates the loudspeaker, will have increased in strength over the input signal current in the first amplifier tube by as many times as approximately the sum of the amplification ratio of the tubes. The effect on amplification varies for

different sizes of blocking condensers and grid leaks. The blocking condensers C_1, C_2 and C_3 are generally called *coupling condensers.*

In a typical 3-stage resistance-coupled amplifier, various values are suggested. The capacity of the coupling condensers is of the order of 0.1 to 1.0 mfd. The capacity of the condenser determines the amount of reactance voltage that will be developed by it at the audio-frequencies for application to the grid.

In order to keep the grid of each tube at a normal potential sufficiently negative to prevent it from becoming positive with respect to the filament on the positive half-alternations of the incoming cycle, it is suggested that the following values of grid leak be used: r_1 of the first stage, 1,000,000 ohms (1.0 megohm); r_2 of the second stage, 500,000 ohms (0.5 megohm); and r_3 of the third stage, 250,000 ohms (0.25 megohm).

The plate resistors in the various stages are usually of exactly the same ohmic value, namely, 100,000 ohms (0.1 megohm) each. Inductance of a plate resistor should be practically negligible.

The plate of the detector calls for a voltage of from 22.5 to 45 volts; the first and second amplifiers, if they are of the same type, that is, having similar amplification factors (or Mu), usually carry 90 to 135 volts, whereas the last tube generally receives 135 to 157.5 volts.

It is imperative that the grids be isolated from the d-c. plate voltage by the three blocking or coupling condensers. While the grid resistances are shown connected directly to the filament, they may be connected to a " C " biasing battery to maintain the grids at their proper negative working potential.

Maximum gain is usually obtained from three stages of resistance coupled amplification, that being the point at which the signals may be amplified without distortion when employing the ordinary tube. Any further increase in signal strength would require the use of a power tube.

Due to the high voltage drop across the resistors, the normal " B " voltage must be increased beyond that required in either the impedance or transformer-coupled systems. Resistance coupling may be used between the radio-frequency stages as well as for audio amplification, but in the modern receiver it is found in the audio system.

The principles of resistance coupling are the same whether used in the audio amplifying system of a receiver or in a commercial tube transmitter for broadcasting. For instance, in the transmitter proper of a certain modern 1-kw. broadcast transmitter, three stages of audio amplification are of the resistance type. Here we find that between the microphone and the high power modulator tube five stages of

straight audio amplification are required to enlarge the feeble microphone current to a suitable strength to be applied to the modulator grid. The five cascade-amplifier circuits are divided as follows: First, the microphone circuit, which is external to the transmitter proper, works through transformer coupling in the first stage. Next, three resistance coupled stages are employed in the transmitter proper. The last stage of the impedance coupled type utilizes an iron core reactor in its plate circuit. Thus, three types of coupling are employed.

The values of the plate resistors, grid resistors and coupling condensers vary according to the size and power of the transmitting tubes and will differ from the values suggested in the foregoing paragraphs, which concern only the ordinary receiving tube.

Impedance Coupled Amplification.—The method for obtaining voltage amplification through vacuum tubes by associating one circuit with another by utilizing an inductance or choke coil common to both circuits is called *impedance coupling*. This method is illustrated schematically in Fig. 209.

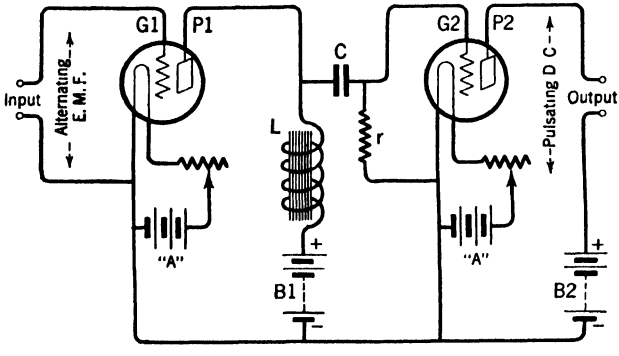

FIG. 209.—A circuit illustrating the principles of impedance coupled amplification.

It can be readily seen that the arrangement is similar to the use of an auto transformer. This is treated in our discussion of the Single Circuit Tuner, in this chapter, showing that energy is transferred from one circuit to another through the self-inductance of a single coil.

The actual difference in the circuit construction from that described in the preceding resistance method is merely that the impedance coil L is replaced by the resistor unit in the plate circuit and different voltages are used.

The device L is called an impedance coil for the reason that when the plate current varies in strength, as it flows through the windings, the self-inductance of the coil being large tends to build up a strong changing flux which generates or induces an e.m.f. in the circuit. That is, the voltage generated across the coil is a *reactance voltage* due to the inductive reactance of the coil. Hence, we find such a coil known by various names, *impedance coil, plate reactor* or sometimes as *choke coil.*

The term "plate reactor" more nearly signifies the use of the device and also the circuit in which it functions. The term "choke coil" is often used to identify this coil when connected in the plate of the last amplifier tube to furnish coupling with the circuit of the loudspeaker. Choke coil really means that the audio variations would be blocked or opposed by the high reactance voltage. This is not actually true, for the coil should be of such inductive value that the audio variations will pass through readily, but in so doing build up the highest reactance voltage possible for direct application to the coupling condenser. Plate reactor is the term always used to identify this unit when it is employed for coupling purposes in the circuits of a tube transmitter.

For example, the induced e.m.f. across impedance coil L is an amplified reproduction of the grid input e.m.f. of the grid G_1 of the first tube; that is, the current in the plate circuit P_1 carrying the signal wave form is amplified to the extent of the amplification factor of the tube.

The signal energy is transferred to grid G_2 of the second tube or first audio amplifier through blocking condenser C. Condenser C is necessary to isolate the positive plate potential furnished by battery B_1, preventing the plate positive voltage from being directly applied to the grid. Grid resistance r provides the conductive path for the flow of electrons received by the grid.

The alternating e.m.f. impressed upon G_2 is repeated in the output P_2 of the first audio stage as a pulsating direct current and the signal will be intensified practically to the extent of the amplification factor of this tube. Another plate reactor may be inserted in the plate P_2 circuit. The general arrangements for successive stages of amplification are similar to the connections shown in the resistance coupled amplifier.

The efficiency of coupling amplifying tubes by this method of self-inductance common to both circuits depends upon the relation of the choke coil reactance to the total circuit impedance. If the audio-frequency current variations flowing through L are of a very low order, then practically no e.m.f. will be induced across its own windings unless the coil is wound on an iron core and a large number of turns used to increase its self-inductance. Therefore, when this type of coupling is used in audio-frequency circuits an iron core reactor is required, but when used to couple radio-frequency amplifying tubes, the plate reactor coil will not require an iron core because the increase in the frequency of the currents in the radio-frequency circuits provides the necessary increase in reactance to generate an alternating e.m.f. of large value across the coil. In the latter case, the reactance of the plate circuit may be controlled by shunting a variable condenser across L.

The values of plate potential and grid leak resistance of the audio

amplifier tube are determined by the type of tube that is used. As previously pointed out, a vacuum tube to give maximum amplification requires that the grid potential be so adjusted that the tube will operate on the straight or linear part of its characteristic curve. With regard to the amplification factor (or "Mu"), it may be repeated that the amplification factor is a measure of the effectiveness of the grid potential relative to that of the plate potential in affecting the plate current.

Three stages of impedance coupled amplification will furnish maximum input operating voltages for the ordinary amplifier tube as in the case of resistance coupling.

Since all of the turns of the impedance coil are connected in common to both circuits, that is, an equal number of turns is used in plate circuit P_1 and in grid circuit G_2, it becomes a one to one (1:1) ratio transformer, as no voltage increase is derived through the action of the coil. However, there are types of coils which are tapped, and less turns may be used in the plate circuit than in the grid circuit. This results in a slight voltage increase in the secondary turns (turns included in the grid circuit). In practical use the 1:1 ratio coil is generally found, and the plate reactor is utilized simply as an effective means of coupling.

An amplifier system may be made up of both impedance and resistance methods of coupling in combination. Also, a single coupling circuit may comprise a plate resistor of about 100,000 ohms, or less, inserted in series with the plate reactor, thus providing an output which has the characteristics partly of impedance and resistance coupling.

To simplify the schematic diagram, Fig. 209, two separate "B" batteries for positive plate voltage and two "A" batteries to heat the filaments, are shown. In the actual wiring of the circuit the two filaments are connected in parallel and to the same "A" battery. One "B" battery could supply the plate potential to all tubes, or if the last tube be operated at a higher voltage than a preceding tube, a tap on the battery would permit regulating the individual e.m.f.'s.

Transformer Coupled Amplifier.—A third method of cascade amplification is the transformer coupled amplifier, shown in Fig. 210. By carefully observing the diagram, we see that the coupling is obtained by means of mutual inductance (purely electromagnetic), which permits the secondary to be connected directly to the grid. In this system, the plate or output of one tube is inductively coupled to the grid or input of the next tube so that the circuit does not require the use of the grid blocking condenser, as in the case of the impedance and resistance amplifier.

The elimination of the grid blocking condenser is always desirable, for if it is not operated at the correct capacity, in conjunction with the

correct grid leak resistance, it may be a probable source of trouble in distorting the signal wave.

The transfer of energy from the primary P of the transformer to secondary S is similar to any process whereby an alternating e.m.f. is induced in the secondary windings by the phenomenon of electromagnetic induction due to a varying current flowing through the primary winding. The simple action of the circuit is as follows: Let us suppose that the grid G_1 of the first tube receives an alternating voltage carrying the signal wave form. The variation in plate current flowing in P_1 circuit will repeat the signal wave, but in magnified form. The pulsating plate current passing through P will produce a changing magnetic field surrounding P and the magnetic lines of force as they vary and cut through the turns of S will induce an alternating e.m.f. in S. This induced voltage is impressed between grid G_2 and the filament of the second tube, resulting in a variation of the output current in P_2 circuit, which again carries the signal wave, but of larger magnitude than output current in P_1 of the first tube.

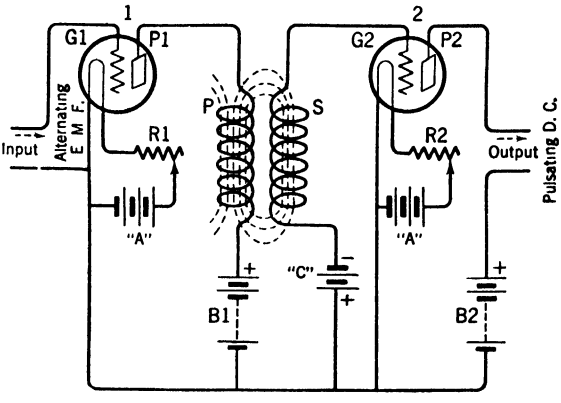

FIG. 210.—A circuit illustrating the principles of transformer coupled amplification.

Additional tubes may be connected in the same cascade arrangement to further amplify the original alternating e.m.f., in which event a transformer would be used to couple the output or plate of one tube to the input or grid of the next tube, using the same method of coupling as is illustrated in the diagram.

The transformer method is employed almost universally to couple radio-frequency amplifier tubes.

In the commercial receiver, the radio-frequency transformer is used simply as a *resonant coupling device* between each radio-frequency tube, and the gain in signal strength is brought about by the inherent amplification characteristics (amplification factor) of the tubes themselves. The incoming signal is stepped up in magnitude in proportion to the number of radio-frequency stages employed, as it is found in practice that three or four stages can be supplied with a convenient single dial

tuning control. The actual number of radio-frequency stages is primarily governed by the maximum amount of grid voltage which may be supplied to the detector tube.

In order to build an efficient amplifier, it is apparent from foregoing explanations that the design of the transformer is governed not only by the characteristics of the tube used, but also depends upon the duty to which the tube is put. The tube can be used to handle radio-frequency, intermediate-frequency, or audio-frequency currents. Hence, we find transformers classified into three groups:

(1) Radio-frequency transformers, by means of which the signal is amplified before detection.
(2) Intermediate-frequency transformers, by means of which the signal is increased, also before passing to the second detector.
(3) Audio-frequency transformers, which function to step-up the signal strength after detection.

In general the inductance of the primary coil of the transformer, including the external plate impedance, should be equal to the internal impedance of the tube, for it will be remembered that the maximum current values will flow in the given circuit whenever the impedance of a device which furnishes power (the tube in this instance) is equal to the impedance of the load circuit (represented by a transformer and any other apparatus in the plate circuit).

Before giving a general description of the three types of transformers let us again refer to the diagram of Fig. 210. The plate circuits of the tubes are shown energized by the batteries B_1 and B_2, which may be contained in one unit. The filaments are heated by one "A" battery, two being shown in the diagram for clearness, and the current flow is regulated by the amount of resistance in rheostats R_1 and R_2, respectively. By varying the rheostats in the filament circuits, the filament temperature is changed, and it follows that the electron emission and the plate current in each tube also will change. The amount of amplification of the signal could be varied in this manner, that is, by changing the filament terminal e.m.f. of one or more of the radio-frequency tubes.

Radio-Frequency Transformer.—After extensive experimentation the manufacturers of radio apparatus generally have accepted as standard the *solenoid type* radio-frequency transformer. In Fig. 211 there are two solenoid-wound transformers, one with the primary (inside coil) loose-coupled to the secondary (outside coil), and the other with the respective coils close-coupled. A cross-sectional view of the

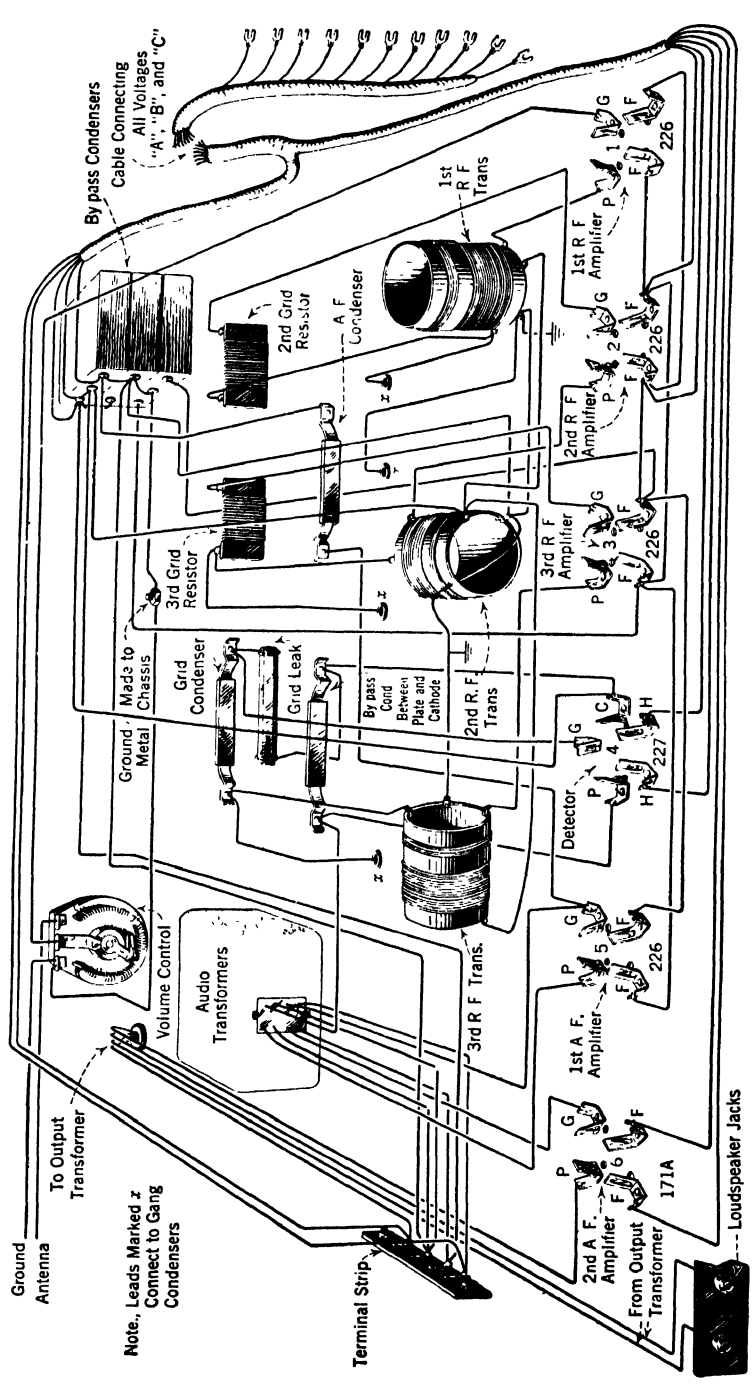

FIG. 211a.—The sub-chassis of a six-tube A.C. operated receiver with the r.f. transformers mounted with their center axes at 90° to each other.

transformer in Fig. 212 shows the correct connections indicated for the output and input terminals.

In some receiving circuits the mutual inductance between the primary and secondary is fixed in the manner shown in the photographs of Fig. 211, while, on the other hand, the unit may be constructed to permit variable coupling for the different wavelengths to which the set is being tuned. To provide for this variation the primary coil is mounted on a shaft to be rotated simultaneously with the condenser that tunes the secondary coil. The coils are loosely coupled for the short waves, or high frequencies, and more closely coupled for the longer waves, or lower frequencies. The coupling is tight, or maximum, when the coils lie in the same plane (with their center axes parallel), while the coupling is loose or minimum when one coil is in a position at right angles (90 deg.) to the other coil.

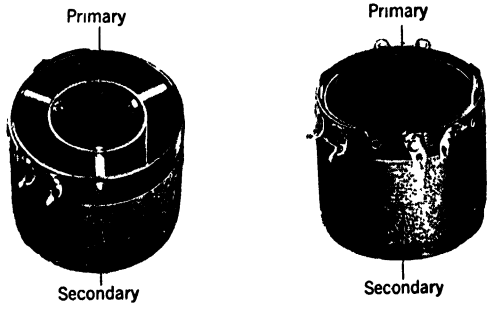

FIG. 211.—Showing on the left a loosely coupled radio-frequency transformer; on the right a closely coupled r f. transformer.

The ratio of the number of turns used in the primary and secondary is such that the proper degree of coupling between the two circuits may be secured in order to establish resonance between them for the maximum transfer of radio-frequency power. From the above explanations it is evident that in a radio-frequency transformer the ratio of turns in the primary to those in the secondary are not calculated with the view of increasing amplification by stepping up the voltage in the secondary.

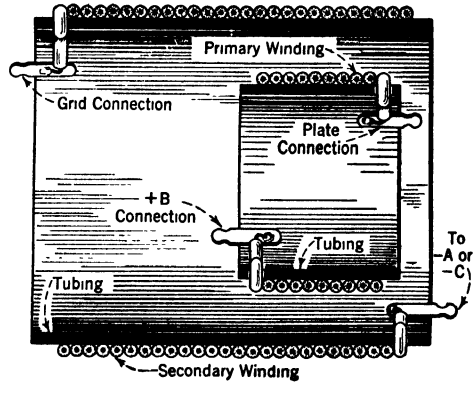

FIG. 212.—Cross-sectional view of a radio-frequency transformer. The primary is mounted within and towards one end of the secondary.

The values of plate and grid inductance and coupling for several stages of amplification are determined by exactly the same conditions as those which exist for the single radio-frequency stage herein described.

Shielding the Radio-Frequency Units.—The radio-frequency transformers may be enclosed in individual shielded compartments to isolate completely the several radio-frequency tuned stages and to prevent their magnetic fields from intercoupling, or to eliminate static coupling between the coils and other parts of the circuit which might cause either oscillations or loss of signal energy. Frequencies close to the frequency at which the transformer happens to be tuned cannot impinge directly on the tuning coils or wiring at that particular part of the circuit, and do not afford a direct means of pick-up because of the shielding.

The shield box is generally made of stamped sheets of aluminum or of copper and electrically grounded. Each box may enclose one radio-frequency unit comprising the transformer coils and tuning condenser, or it may enclose only the transformer itself, or even, on the other hand, it may be large enough to house one complete radio-frequency unit, including the tube. A small removable cover permits inspection of the tube and provides an opening sufficiently large for tube replacements.

The metal housing must be large and the coils correspondingly small to prevent abnormal losses due to absorption of the radio-frequency energy by the shield. A circuit of this type must be very accurately designed, or it will require the use of an additional stage of radio amplification to compensate for possible losses and the receiver will then be less efficient than one which has a similar number of radio-frequency stages but has no shielding.

Receivers that do not employ shielding to aid in minimizing the undesirable effects of intercoupling between fields have the adjacent radio transformers mounted with their center axes in a plane at 90 deg. to each other, or at other predetermined angles and distances between centers according to the design of the circuit.

The tuning requirements for a stage of radio amplification are the same as those for the inductively coupled receiving circuits described in the early part of this section.

Intermediate-Frequency Transformer.—The intermediate transformer is used in the amplifying circuits of the super-heterodyne receiver. These circuits differ from the radio-frequency circuits only because of the lower frequency current handled. The intermediate is not a very high frequency, yet it is classified as a radio-frequency because it lies above the normal audio range. In order to increase the impedance of the intermediate circuit, a transformer with a small magnetic (iron) core may be used. Or an air-core type may be found satisfactory when it is wound with the correct number of turns.

From the discussions of the elementary theory of electromagnetic

induction we found that an iron core composed of soft iron (silicon steel) laminations increases the density of the magnetic flux and thus builds up sufficient opposition (reactance) to the rapid reversals of alternating current at intermediate-frequency without the necessity of adding very many turns of wire which would increase the distributed capacity of the coil. The insertion of the iron core for the lower frequency current provides for the maximum induced alternating e.m.f. to be delivered to the grid of any succeeding tube.

The increase in the self-inductance of the transformer by the use of the iron core has the advantage of giving the circuit sufficient inductive reactance to oppose the alternating current changing at a higher frequency than that in the intermediate range. In effect, the transformer acts as a filter to exclude frequencies other than those which the circuit is designed to pass.

By careful design the transformer may be peaked at any desired intermediate frequency, and made critical to a narrow band of frequencies to include the audio range, thus giving selectivity to the circuit. If the electrical constants of the circuit as determined by the inductance of the transformer coil and its distributed capacity happen to be resonant to the intermediate-frequency, the current will oscillate through this resonant path and dissipate some of the signal energy, thus lowering the amount of useful voltage available for application between grid and filament. It is to be observed that distributed capacity in a winding together with its inductance is just as effective in forming an oscillatory circuit as though a condenser having similar capacity is connected across (in shunt with) the coil. To prove this in a practical way, connect a small condenser momentarily across the secondary winding of a transformer in a circuit which is operating efficiently and note the reduction in signal strength each time the condenser is connected in.

Audio-Frequency Transformer.—The audio transformer is used as a coupling device between two vacuum tubes to receive current changes carrying a signal wave from the output of one vacuum tube, and to deliver the highest variation of voltage, without distorting the wave form, to the secondary and the grid of the next amplifier tube.

An audio-frequency transformer is called upon to amplify uniformly all of the audio-frequencies which flow through its windings. The amount of iron in the core must be sufficient to handle the flux changes due to the variations in the current strength. These variations at the lowest audible frequencies are of the order of 20 cycles per second; the upper frequencies of pure tones are approximately 5000 per second and the harmonics and over-tones reach frequencies upward and greater than 10,000 per second. An audio transformer is designed to give uniform ampli-

fication at all of these frequencies, which, in practice, cannot be accomplished entirely, but which will closely approach the ideal objective.

If a transformer lacks uniformity, certain frequencies will be accentuated and produce sounds louder than notes of other frequencies, and the reproduction in the loudspeaker will not be pleasing. The amplification of a low frequency current is obtained by increasing the number of primary turns to increase the self-inductance of the coil, or by enlarging the size of the core and constructing it from a good grade of soft magnetic iron (known as permalloy) having a high permeability.

An audio transformer is designed especially so that the impedance of the primary winding will match the output impedance or plate resistance of the tube with which it is used, for reasons already stated in other paragraphs of this chapter.

A high-grade audio transformer will produce nearly a flat characteristic curve, which means that it will amplify all of the necessary audio-frequencies equally well; that is, it will give a uniform balance between the amplification of high and low frequency currents and not impair the quality by side band cutting. If a transformer shows a sharp rise at about 150 cycles and thereafter the amplification remains constant up to about 5000 cycles, it denotes a condition suited to modern requirements.

The Iron Core—Saturation Point.—In the foregoing paragraphs it has been stated, but not in these exact words, that the core of an audio transformer should be capable of handling all of the magnetic flux changes produced by the varying plate current without becoming saturated. If the core becomes saturated, or nearly so, by the ordinary steady flow of plate current when no signals are received, then for any instantaneous changes or increases in this current caused by a signal charging the grid, the resulting increase in magnetizing force of the plate current will actually produce very little additional flux. Since the source of voltage and audio-frequency currents induced in the secondary is through the fluctuating magnetic lines of force in the core, we will find that if the magnitude of this flux is limited above a certain point it will not register all of the plate current variations. This will seriously affect the quality of the signal, especially if voice or musical renditions are being received. If a large core of good magnetic material is used a much larger d-c. plate current will be required than the ordinary tube handles to reach this point of saturation. A large-sized core is always used in an audio transformer when it is connected to the output of a power tube where the magnetizing force of the plate current is great. In broadcast transmitters the coupling transformers carrying speech or audio-frequencies also are built with large cores.

We may sum up this general information by stating that the factors which govern the magnetizing force for a given primary coil are the value of the current flowing through the primary winding, the material, shape and size of the iron core. Also the magnetic field is dependent upon the number of turns.

The fundamental principle upon which an audio transformer functions is similar to that in any transformer insofar as the transference of energy from primary to secondary through a changing magnetic field is concerned. Hence, the discussion naturally centers only around its physical parts, the windings and the core. It will be apparent that, in order to obtain equal efficiency from currents which change very slowly at times and very rapidly at other times (undergoing a continuous series of instantaneous changes in the same piece of apparatus), much will depend upon the nature and design of the core which acts as the medium through which the energy is delivered to the secondary circuit.

Amplification.—Audio-frequency transformers are generally of the shell core type constructed somewhat like the one shown in Fig. 213, and are designed to obtain amplification of the signal energy. This is accomplished by winding the secondary with a greater number of turns than the primary. For instance, in the electrical characteristics of a typical transformer the ratio of secondary to primary turns is given as 3 to 1. The d-c. resistance of the secondary is approximately 9000 ohms, and the primary approximately 2000 ohms. Under test such a transformer gave an audibility amplification of about 20 times, and using two stages of amplification which required two transformers, gave an audibility amplification of 400 times. The turns ratio, however, differs according to the design of the circuit, but in general is rated from 3 : 1 up to a limit of about 9 : 1. It must be understood that transformers having any ratio from 1 : 1 to the limit mentioned may be used, depending upon the circuit requirements. The allowable current in the primary when used with the ordinary vacuum tube is about 10 milliamperes (maximum). In order not to increase the bulk of the secondary, it is layer-wound with several thousand turns of very small enameled copper wire of about No. 39 or No. 40 gauge. The secondary winding with its large number of turns must be made to give a low dis-

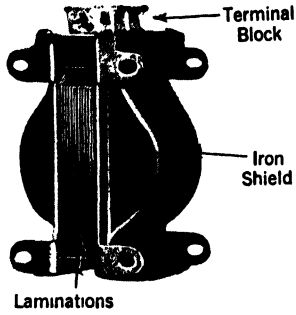

FIG. 213.—Audio transformer showing the iron laminations and shield enclosing the windings.

tributed capacity to insure freedom from losses due to bypassing and dissipation of the higher audio-frequencies through this self-capacity of the winding. A minimum loss of energy from this cause permits the maximum potential to be applied to the grid of the tube at all audio-frequencies. Audio transformers used to couple the output of a power tube to a loudspeaker most generally have a 1 : 1 ratio.

The photograph (Fig. 213) shows the laminated iron core and the iron shield which completely encloses the windings, whereas the terminals are connected to the four lugs at the top insulating strip. In addition to this, the transformer may be completely enclosed by a sheet-iron housing and then grounded by the connection to any part of the circuit which may have been grounded. Audio transformers should not be mounted too close· a separation of at least 4 or 5 in.

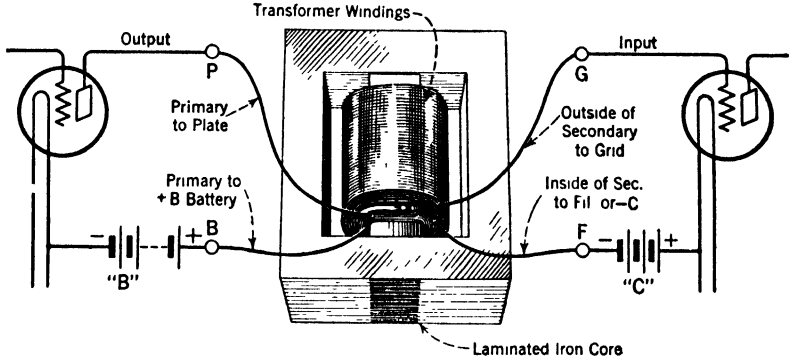

FIG. 214.—Showing how an audio-frequency transformer is used to couple two vacuum tubes

should be allowed; or, when two transformers are mounted close together, they ought to be turned to place the cores at right angles to each other. This arrangement and also the shielding construction will obviate the difficulties sometimes due to the inductive effects set up by intercoupling of the magnetic fields, with resultant oscillations at audio-frequencies that cause " howling " in the output of the amplifier.

The complete assembly of core and coil is shown in Fig. 214, with the primary and secondary windings connected respectively to the output of one tube and to the input of the next tube.

The primary turns are wound first, and after suitable insulation is placed over the last layer, the secondary turns are then completed. Iron laminations are inserted in the center of the finished windings and this iron core is now assembled with the main laminations comprising the outer shell. This provides for a complete or continuous magnetic

circuit. There are other types of construction where the coils are wound in separate sections and placed side by side on the core.

Purpose of Iron Core—Laminations.—It is by means of the continuous magnetic path furnished by the iron core that we are able to obtain from an audio transformer a large audio amplification, with resulting volume increase, when there is a higher number of secondary turns as compared to primary turns. The voltages generated in the secondary winding by the fluctuating magnetism set up by the current in the primary winding must necessarily be high, for the reason that all of the secondary turns fall within and are acted upon by all of the magnetic lines of force, being carried through by means of the iron core.

The turns ratio and voltage increase possible in an audio transformer will not apply in the case of a radio-frequency transformer which does not have an iron core. The air surrounding the radio-frequency transformer is the medium which carries the fluctuating field produced by the primary. All of the magnetic flux cannot be utilized by forcing it to take a certain path, as through iron (because of its higher permeability than air), but the magnetic field assumes its normal shape as it encircles in the space entirely surrounding the primary coil. Only as much of this field as will act naturally upon the secondary turns which are nearest to it will be effective in inducing alternating voltages in them. Any turns of the secondary which lie outside of the primary field or in a more remote position, where the field is weaker, would serve only to provide the coil with the proper inductance in order that it may be tuned with a variable condenser of a particular size. It has already been mentioned that a radio-frequency transformer is designed to provide a form of resonant coupling between tuned or untuned oscillatory circuits.

The iron core of an audio transformer is made up of thin sheets of stampings of silicon steel, called laminations, for the purpose of reducing *eddy currents*. Eddy currents are small whirlpools of induced energy in the iron core (due to the flux variations therein), which produce losses due to the heat generated. While the eddy currents can flow in a negligible quantity in each of the laminations, this induced energy will not build up to abnormal values, being prevented from flowing through the entire mass of iron by electrically insulating the laminations. This is done by applying shellac to the laminations (coating with insulating varnish), or by an oxidizing process which is effective in preventing metal-to-metal contact between them.

The new transformer core material used extensively is known as permalloy, consisting of 20 per cent iron and 80 per cent nickel. This

special metal reduces eddy currents to a minimum without appreciably lowering the permeability of the core.

The primary wire should be well insulated from the core and the transformer as a whole ought to stand up under a test voltage of at least 300 volts, at 60 cycles, between windings and between core and windings.

How the Four Transformer Wires Brought to the Terminal Strip Should Be Connected in the Circuit.—The general rule for connecting the four leads is shown in the diagram, Fig. 214. First, consideration must be given to the grid *G* connection. The lead from terminal *G* should be kept reasonably short and should come from the outside or finishing-off wire of the secondary winding. The inside or beginning of the secondary coil is connected either to the negative filament terminal *F* or to the negative post on a " C " battery, if one is used. The inside or start of the primary is often connected to the plate *P* and the last turn connected to " + B." However, a reversal of this primary order may be found in certain circuits.

It is very important to have the extreme outside ending wire of the secondary connected to the grid, as stated above. The turns of the secondary winding nearest the iron core have a greater capacity to earth (ground) than the turns which are toward the outside of the winding. Therefore, the inside turns should be kept as far as possible from the grid. This requirement is made necessary because the vacuum tube is a voltage-operated device and it will be found that the highest potential side of the secondary is that portion of the winding farthest from any influence with respect to the ground. While all transformers are not marked in this way, it is easy to determine the connections by examining the transformer and observing which leads come from the inside, or the start of the winding, and which come from the outside, or end of the winding.

If the quality of the speech or music is to be maintained, it is usually necessary to connect a " C " battery in the grid circuit, or in the electrically operated sets, to connect the grid return lead to some portion of the circuit resistance which will provide the necessary drop in voltage to supply the proper negative bias to the grid. The negative bias keeps the grid negative at all times with respect to the filament, and the signal voltages will then act to cause the grid potential to swing equal distances on either side of its normal voltage, the grid never actually becoming positive. If the tube is operated on the straight-line portion of its characteristic curve, distortionless amplification is secured, because the plate current will vary equally on both sides of its average current in accordance with the alternating signal voltage applied to the grid.

The values of grid bias and plate voltage required to bring about this condition depends upon the type of amplifier tube that is employed. A safe value of negative bias for almost any audio amplifier (not a power tube) is about 4.5 volts, in conjunction with a plate potential of 90 volts. A complete list of values is given in the table of " Vacuum Tube Characteristics " in the Appendix.

Volume Control.—The amount of amplification may be varied by changing the terminal voltage of one or more of the radio-frequency tubes, or by varying the filament voltage of the detector. However, it is advisable to utilize the detector filament control, if one is provided, only as a means for adjusting the detector to maximum sensitiveness to receive weak signals, or to improve the quality and naturalness of voice signals.

The amount of audio volume may be regulated by another method where a variable resistance, similar to a potentiometer of a few hundred thousand ohms, is shunted across the secondary of the first audio transformer. The negative potential on the grid is controlled in the following way.

The variable potentiometer resistance is connected in parallel with the transformer winding, the latter representing a fixed d-c. resistance. Thus two paths are provided for the grid current flow. If, for instance, we cut in resistance in one leg of a parallel circuit, at the potentiometer, the total circuit resistance is decreased, permitting more d-c. grid current to flow. Additional current to the grid will make it more negative and act to increase the deflection of the electrons which form the space charge. This results in a reduction in plate current and a consequent lowering of the volume. It also holds true that by again reducing the resistance to certain practical limits the volume may be gradually restored to normal.

Two stages of audio-frequency amplification seem to be the practical limit to which an amplifier circuit can be operated efficiently when employing transformer coupling and using the ordinary vacuum tube (one not listed under the classification of a power tube).

Six-Tube Tuned Radio-Frequency Circuit. Single Dial Control.—The circuit illustrated in Fig. 215 shows a modern six-tube tuned radio-frequency receiver employing five tubes of the direct current type, five 201-A's, and one power tube, UX-112.

The tuning range extends from 550 to 1500 kilocycles (kc.), or approximately 546 to 200 meters.

The control is simplified by providing only one dial for a change of wavelength. This is accomplished by linking together the rotor shafts of the three tuning condensers, so that when one rotor is moved the

others turn with it. Tuning condensers which are thus arranged in tandem are said to be "ganged" together.

The volume is adjusted by the rheostat in series with the filament lead supplying the three radio-frequency tubes. A smooth control is obtained by varying the terminal e.m.f. of these three filaments.

The circuit characteristics are as follows: All of the three tuning condensers are of similar capacity and tune respectively the three secondary circuits of radio-frequency transformers *A*, *B* and *C*. The reactances of the three oscillatory circuits are balanced simultaneously at any one frequency, that is, at the frequency of the signal being received, by employing the three-gang condenser.

By inserting a winding of about 2000-ohms resistance in the antenna circuit the natural damping of the open circuit is increased and made *aperiodic* (having no definite period of oscillation), therefore requiring no separate

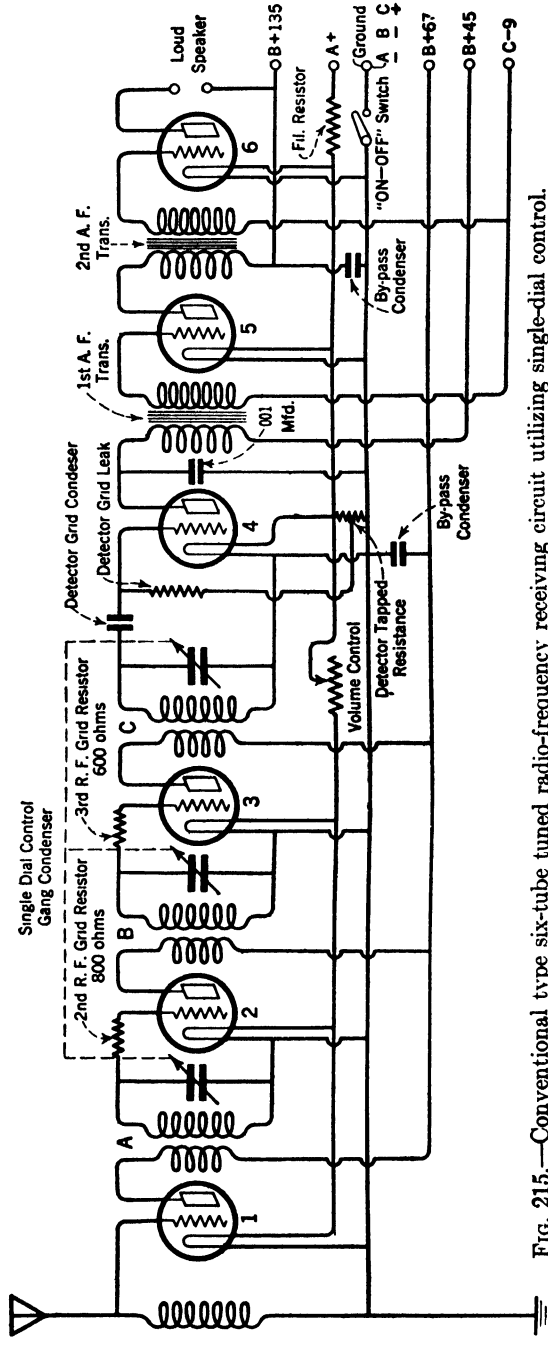

FIG. 215.—Conventional type six-tube tuned radio-frequency receiving circuit utilizing single-dial control.

tuning control or antenna condenser. Hence, the antenna is not made critical to any one frequency, but will respond to all of the frequencies in the broadcast range. The oscillating e.m.f. across the antenna winding is applied directly between grid and filament of the first radio-frequency tube, number 1, as can be understood by observing the schematic diagram. It functions merely as a coupling tube.

Grid resistances are placed in the radio-frequency amplifier tubes, 2 and 3, to prevent any self-oscillation that might occur. The grid resistances are 800 and 600 ohms respectively, one in each radio-frequency stage of amplification, and they act to dissipate in the form of heat any oscillating currents due to feed-back of radio-frequency energy through the self-capacity of the plate and grid elements. Neutralizing condensers are not required. This grid resistance method, sometimes called the *losser method* or *grid suppressor method*, of combating the tendency of a radio-frequency amplifier tube to oscillate at the low wavelengths, has been found to be practical and effective. Moreover, it affords a simple circuit arrangement.

The plate e.m.f. of 67 volts is used on all radio-frequency stages without a " C " battery, as this simplifies the battery circuits without any loss of sensitivity, and the lower plate voltage is also another expedient for preventing self-oscillations.

The plate e.m.f. of 135 volts is used in both audio tubes, namely, 5 and 6, in conjunction with the negative grid bias of 9 volts. A greater amplification is obtained in the first audio stage by giving this tube a high operating characteristic, which, when used with the power amplifier tube UX-112 in the last stage, results in greater volume with minimum distortion delivered to the loudspeaker.

Radio-frequency transformers *A*, *B* and *C* are mounted with their center axes at right angles to each other, to prevent interstage coupling. The magnetic lines of force surrounding each coil when signal currents flow will thread through a neighboring coil in the same plane or parallel with the turns of wire, and it follows that no induction of e.m.f. from one coil system to another will take place. (See Fig. 211*a*.)

The grid leak resistance is not shunted across the grid condenser of the detector tube, number 4, but it is connected directly to the filament circuit through a tapped resistance, the latter being shunted across the filament circuit. The grid return lead is connected to the cathode (filament) in the usual way. A plate e.m.f. of 45 volts in conjunction with the proper leak resistance to maintain the grid at the correct working negative potential will give the greatest sensitivity for the 201-A type tube when used as a detector.

A bypass condenser is connected from the output of the detector

between plate and filament to furnish a path of low reactance for the alternating component of the plate current. The high frequency alternations are dissipated through this condenser circuit, whereas, the audio variations or d-c. component carrying the signal wave form flow through the primary of the first audio transformer.

Bypass condensers are connected between negative " B " and plus 67 and plus 135, or across the power source.

A fixed resistor is used in the filament circuit to control the input voltage to the tubes instead of the usual variable rheostat and as a precaution against excessive filament voltage when the total load is not in the circuit. Since the filament voltage is definitely established within the correct range by the use of the fixed resistor, it is important to make sure that all of the tubes (representing the full load) are in place before closing the " Off–On " operating switch.

Five-Tube Tuned Radio-Frequency Receiver Employing Regeneration.—The five-tube receiver illustrated in Fig. 216 consists of two stages of balanced tuned radio-frequency amplification, a regenerative detector, and two stages of audio-frequency amplification.

The operation of the receiver and the function of the various elements may be easily understood by reference to the treatment throughout this chapter of the three divisions just indicated.

The three main tuning condensers C_1, C_3 and C_5, are of the *straight-line frequency* type with their rotor shafts mechanically coupled together and adjusted in phase, so that the three tuned circuits are resonated simultaneously to the signal frequency by the operation of only one control dial. In order to permit very fine tuning adjustments, two small auxiliary vernier condensers C_2 and C_4, each having only two stator plates and a single rotor plate, are shunted across the main variable condensers C_1 and C_3. This arrangement is especially desirable in circuits which provide for tuning the antenna coupler. The first and second tuning condensers do not always track in absolute synchronism, owing to a slight change in the mutual inductance or coupling between the coils of the antenna coupler when used with different sizes and types of antennas. The vernier condensers allow for any very slight variations in the circuit constants of the first and second radio-frequency stages to be compensated for, and by their use the sensitivity of the receiver is enhanced as will be noticed especially when tuning in weak signals from distant stations. The three radio-frequency circuits are substantially identical circuits and lack of agreement in the circuit constants is not usually noticeable when receiving signals from nearby stations.

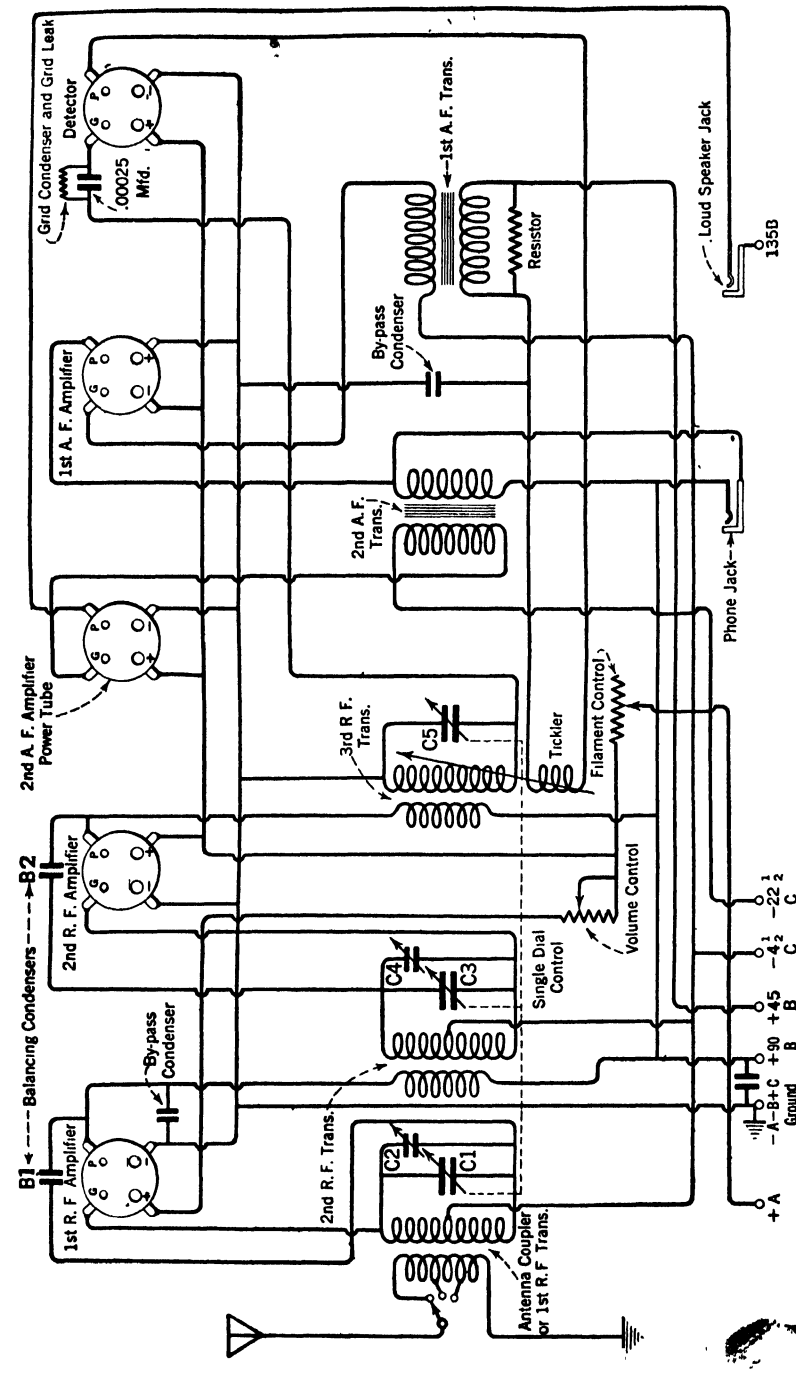

FIG. 216.—A schematic diagram of a five-tube balanced receiver of the tuned radio-frequency type employing a regenerative detector.

Methods to check up any discrepancy in the alignment of the main tuning condensers will be the subject of further observations.

The antenna stage employs an antenna coupler usually provided with a three-tapped primary allowing the use of a long, medium or short antenna, at will, by means of suitable pin jacks.

The sensitivity of the circuit is further increased and a large gain in amplification is secured by regeneration. The tickler coil in the detector plate circuit is inductively coupled to the grid coil of the third radio-frequency transformer, or input coil to the detector. The amount of regeneration is under full control at all wavelengths by means of the variable coupling which provides for a lateral movement of the tickler coil. For extreme loose coupling (zero setting on the dial) the tickler may be moved several inches away from the grid coil. Regeneration may or may not be used at any particular frequency.

The grid return of the detector is connected to the positive filament in order to operate the grid at the proper potential when the grid condenser and leak are used. A point in the detector characteristic curve is thus found where the maximum sensitivity is secured, or, in other words, where the best detection is obtainable. The grid to filament resistance is much lower when the grid is connected to positive filament than when connected to negative filament. A slight loss in amplification results because this low resistance, between grid and filament, is connected across the secondary of the radio transformer or interstage coupling transformer. The effects of regeneration, however, more than offset any loss in amplification in order to give the detector a good operating characteristic.

The inter-electrode capacities of the radio-frequency tubes have been compensated for by the two small neutralizing or balancing condensers indicated as B_1 and B_2. If the neutralizing condensers get out of adjustment they will cause uncontrolled oscillations, manifested usually throughout the tuning range of the receiver. The process outlined in the following paragraph for condenser adjustment is in general applicable to any receiver utilizing the combination of capacity and inductance for suppressing undesired oscillations due to the self-capacity of the tubes. The theory involved in balancing out the capacity of the tubes by means of the capacity of the condensers B_1 and B_2 is explained in Chapter XX.

Procedure for Balancing or Neutralizing.—The equipment required consists of the following: a modulated oscillator having an audio-frequency output to supply the radio signal, a screw-driver made from a piece of bakelite to fit the slot in the adjusting screw, and a specially prepared vacuum tube similar to the type used in the set. One of the

filament pins (large pin) is sawed off close to the base so that when the tube is seated in the socket the filament will not light, but it is imperative that the tube otherwise be perfect. The modulated oscillator affords a more reliable means of determining the point of minimum, or no signal, upon which the accuracy of the whole process depends than could be obtained if the neutralizing was carried out when listening to an actual broadcast signal. A buzzer excitation circuit may be used instead of the modulated oscillator as a convenient source of damped oscillations for testing purposes.

STEP BY STEP NEUTRALIZING PROCEDURE

(1) Always use head phones instead of a loudspeaker. With the antenna and ground leads attached, all regular tubes in sockets and the set in condition for normal operation, close the filament switch.

(2) Place the modulated oscillator into operation at one of the low wavelengths, about 1000 kc. (kilocycles) and locate the apparatus close to the antenna wire to afford a means of pick-up, at least twenty feet from the receiver, to prevent a direct pick-up through the coils of the set. It is important that the signal shall come through to the set by means of the antenna.

(3) Tune the receiver carefully until the oscillator signal is heard with maximum intensity.

(4) Now remove the first radio-frequency tube and replace it with the special tube. It will be observed that all the tubes light with the exception of the special one.

a. If no signal is heard, it indicates that the first stage is perfectly neutralized, meaning that the tube elements of the special tube are not passing the signal current. Keep in mind that the special tube is inoperative because the filament does not emit electrons, and that when this tube is inserted in any perfectly neutralized stage it should block the signal.

b. If the signal is heard even in decreased volume as compared to the signal strength when the regular tube was in place in the first socket, then the balancing condenser for this tube should be adjusted. In the diagram of the receiver (Fig. 216), condenser B_1 must be adjusted for the first stage. This is accomplished by turning the adjusting screw with the insulated screw-driver until no signal is obtained. It should be understood that a zero condition cannot always be found, because the adjustment is very critical at this point. Hence, for all practical purposes, a minimum signal, which is nearly inaudible, is allowable in determining the final adjustment of the balancing condenser.

(5) After the first stage is thus neutralized, the special tube is removed from the first socket and replaced with a regular tube. The signal will now come in with normal volume.

(6) Next remove the second tube from its socket and replace it with the special tube, and adjust balancing condenser B_2 in the same manner as B_1 for minimum, or no signal. The second stage is neutralized when the special tube blocks the signal current.

(7) Now replace the special tube with the regular tube and the set is again in normal condition with maximum signal. The set will not oscillate if instructions are carefully followed and the sensitiveness of the receiver will be greatly increased.

(8) When neutralizing the radio-frequency stages of receivers employing regeneration the tickler coil should be coupled as loosely as possible with the detector grid coil, the tickler control dial being set on zero.

Procedure for Lining up the Main Tuning Condensers.—With single dial control, all of the rotor plates of the tuning condensers move simultaneously. While a large deviation in the position of the plates may be readily ascertained by inspection, a small degree of difference will be noticeable only by tuning characteristics. The general reception may appear normal on local or strong signals, but results are below normal on distant or weak signals.

The method of checking up the alignment of the condensers in receivers which are designed to permit adjustment is very simple, requiring only the use of a modulated oscillator to supply the signal energy.

In general the operation consists of passing the signal through the set, at first beginning directly with the detector and then utilizing only one stage of radio-frequency amplification (in each case note setting on the dial scale), then adding other stages of amplification in progressive order and for each change comparing the dial settings for maximum signal. Lack of agreement in the position of the tuning dial when tuning the set as each stage is added denotes that the radio-frequency circuits are not in phase, that is, not all adjusted to the same frequency. Certain circuits when out of adjustment will then offer more or less reactance (opposition) to the particular signal frequency received than others.

PROCEDURE TO BE FOLLOWED

(1) Locate the modulated oscillator about twenty feet from the receiver. The signal is carried to the set by means of a pick-up wire connecting the test oscillator and one of the radio-frequency transformers. The arrangement is illustrated in Fig. 217, showing how one end of the pick-up wire is wound once around the transformer coil and the other end wound around the oscillator coil, or, in some cases, this wire is laid about a foot from the oscillator coil.

(2) Place the receiver in operation by closing the filament switch and also place the oscillator in operation at one of the lower wavelengths, about 1500 kc.

(3) Remove both radio-frequency tubes shown in Fig. 216. Place the pick-up wire around the third radio transformer, connected to the input of the detector tube. Tune in the signal to maximum intensity and note the point of resonance on the tuning dial with a pencil. Observe that only the detector and audio amplifier are being used.

(4) Replace the second r.f. tube only, remove the pick-up wire from the third transformer and place it around the second transformer. One stage of radio-frequency amplification is now used, and as before, tune in the signal, mark the resonant point and note if the point of maximum signal as marked on the dial is the same as the first marking when the pick-up was on the third transformer. If the dial markings do not coincide the condenser C_3, which controls the frequency of the second radio-frequency stage, should be slipped slightly at the shaft coupling.

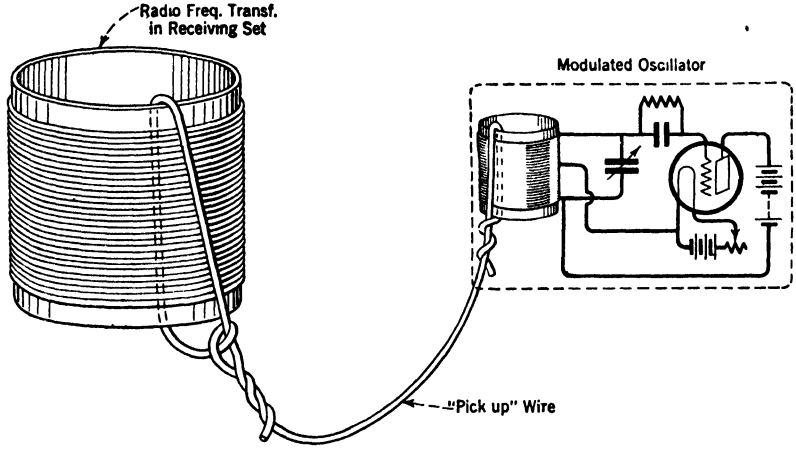

FIG. 217.—One of the uses of a modulated oscillator. The pick-up wire delivers the test signal to the radio-frequency coil.

(5) Replace the first r.f. tube in its socket, thus returning all tubes to the circuit. Remove the pick-up wire from the second transformer and place it around the first radio-frequency transformer or antenna coupler. Now observe whether the resonant point, when the circuit is tuned to maximum signal, coincides with the original point when the third transformer and condenser C_5 setting was noted. If not, the rotor plates of the first condenser C_1 should be slipped at the coupling and adjusted. It is essential that the preceding circuit be accurately adjusted and left at its resonant point before making any changes in the condenser controlling the circuit under test.

(6) After the three circuits are tested and adjusted in this manner the resonant points should be identical for any given frequency. It is often found in practice that while the condensers will check at one end of the frequency range of the receiver they will not check at the opposite end of the fre-

quency scale. Therefore, to verify the adjustments, the oscillator should be set at one of the higher wavelengths, about 550 kc., and the foregoing procedure repeated at this frequency.

When adjusting the main tuning condensers in receivers provided with vernier condensers, the vernier condensers should be set at their center points, midway between maximum and minimum capacity. If it is found during normal reception that one or both of the verniers tune to either extreme throughout the frequency range, it is an indication that the main tuning condensers are out of alignment. It is true that at certain frequencies the verniers may require a maximum amount of variation to establish resonance, but it is not always necessary that this should be the case.

Extreme caution must be observed whenever making tests in a-c. operated receivers which require the removal of one or more of the a-c. tubes while the circuit is in operation. A resistance of value equal to that of the filament of the tube to be removed should be connected across the socket terminals. With the external resistor in place to compensate for the filament resistance, the load on the transformer winding supplying the heating current is not altered, and the other tubes in the circuit will not be overloaded with excess voltage.

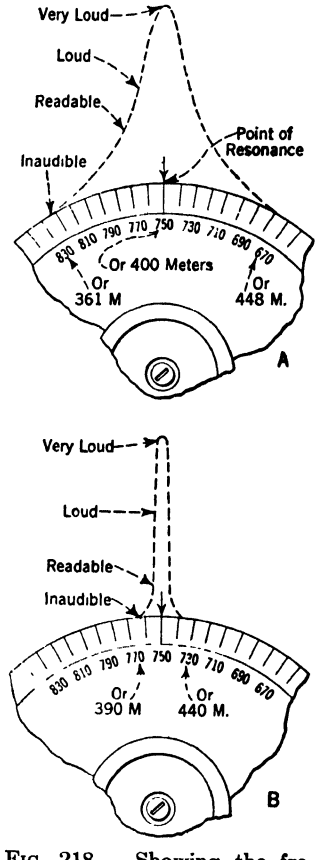

FIG. 218. — Showing the frequency range over which signals might be received with respect to signal volume when manipulating the tuning dials of two different receivers. The lower view depicts the desired selectivity.

Broad and Sharp Tuning. Straight-Line Frequency (S.L.F.) Tuning.—The measure of broad and sharp tuning as it directly affects the person when adjusting a receiver to a particular signal is shown graphically in Fig. 218. The upper tuning dial *A* illustrates the readability of the received signals when the dial is rotated through a band of wave lengths equal in range to about 80 kc. (kilocycles). It shows, while the receiver is primarily adjusted to resonance with a 750-kc. signal, that the energy is broad enough to be readable at 710 or 810 kc. In this case

the intensity of an interfering wave will be sufficiently strong on either side of the 10-kc. band to cause overlapping and confusion of signals.

The lower dial, *B*, shows the effect of selective tuning as defined by the Radio Commission, which requires that the transmitted frequencies of each station include a band not over 10 kc. wide, the purpose of selecting this limited range being to allow the transmission of the voice frequencies, and music, necessary to preserve tone quality and give natural reproduction.

To obtain perfect audio-tone reproduction from the output of a receiver, it is imperative that the 10-kc. frequency band radiated by the transmitting station be not altered in any way, so to speak, by side band cutting, that is, by cutting off and rejecting upper or lower audio-frequencies by a too highly selective circuit. The circuit nevertheless must not be too broad, as in *A*, to permit interference from signals not desired. Selectivity and tone quality must both be taken into consideration in the design of the receiver.

Many of the present-day receivers are tuned by straight-line frequency (S.L.F.) condensers. It is evident that the tuning dials shown in Fig. 218 are attached to the rotor plates of variable condensers, of the straight-line frequency type, because the graduations on each dial scale show that all of the marked divisions are equally spaced, and between each line the same number of kilocycles is included. The stations are not crowded at one end of the dial, but are evenly distributed over the control dial scale, thus permitting greater selectivity.

Selectivity is the degree to which a receiving set is capable of differentiating between signals of different frequencies. This measure of the tuning qualities of a set is not to be confused with *sensitivity*, which refers to the degree to which a set responds to signals of a frequency to which its circuits are tuned. Sensitivity is usually associated with the reaching out or distance-getting capabilities of the receiver.

The separation of the stations in uniform steps of 10 kc. is made possible by the design of the condenser plates. A curve plotted to show the relation of capacity changes to frequency variations through the range of the condenser would be a straight line.

If a condenser is made to give the moving plates the proper shape the effective area can be varied as the square of the angle of rotation. The fixed plates usually are cut to form perfect half-circles while the rotor plates are shaped somewhat like a half-ellipse, and besides, the shaft carrying the rotor plates is mounted to one side of the center of the fixed plates in an offset position. The capacity of a condenser of this design will vary in such a way that for each rotation of the dial

through one division on the scale the frequency of the circuit will be changed 10 kc.

Wave Trap in Antenna Circuit.—A wave trap is a device consisting of a coil shunted by a variable condenser to form a tuned oscillatory circuit and is used to eliminate the signals from interfering stations.

The inductance and capacity values are usually the same as those employed in the tuned radio-frequency circuits of the receiver in order that the wave trap circuit will cover the same frequency band as the receiver. One type of wave trap is inductively coupled to the antenna through a small coil inserted in the antenna and used as a coupler.

The wave trap is tuned to resonance with the frequency of an interfering signal picked up by the antenna. The circuit then absorbs and dissipates this energy. The interfering energy will not flow through the receiver because its oscillatory circuits are tuned to a different frequency; namely, that of the carrier current of the desired station. As far as its effect upon the receiver is concerned, the wave trap acts as a rejector circuit for only that particular frequency to which it is resonant, and the receiver then acts to accept some other frequency, the one to which its circuits are attuned. An ordinary tuned circuit has its reactances, capacity reactance and inductive reactance, balanced at only one frequency.

The process of tuning a set lowers the opposition (impedance) to current flow to a minimum for one particular frequency, but the opposition or impedance to frequencies other than the one to which its circuits are tuned is not made a maximum. In other words, tuning makes the signals of one station maximum in strength and weakens the others, but does not actually eliminate or cut out the weaker stations, although the latter may have been reduced to the point of inaudibility. The signal currents are always present from a great many stations, but in varying degrees of intensity.

Hence, the wave trap finds its principal usefulness when a receiver is situated close to a transmitter emitting a powerful signal on an adjoining wavelength to the signal desired.

A circuit which has often proven effective in combating strong local interference, but which is not strictly a separate wave trap circuit, is one in which a variometer is inserted in series with the antenna circuit and the primary of the antenna radio-frequency transformer is made variable. By varying the inductance of the variometer and changing the coupling between primary and secondary of the transformer, interference is generally eliminated.

It must be remembered that a tuned circuit can be made ultra-selective, which is sometimes desirable, as, for instance, when used for

the reception of radio signals on the very short waves; for here a 5-kc. separation between stations may be all that is necessary to separate signals whose notes are not too broad. But, as explained several times, a radio circuit used for broadcast work must not be so selective as to discriminate against the lower or higher audio-frequencies and thus cut off some of the modulation necessary to perfect tone quality.

It is readily seen that occasionally it may be necessary to sacrifice some of the high tones of music in order to gain selectivity and prevent interference. Distortionless reception of a modulated wave and its relation to selectivity is understood, but the practical methods for obtaining the highest percentage of both is the subject of continual research and investigation. A circuit to be placed in front of each radio-frequency stage that has the property of balanced reactances at all of the frequencies within a band of twenty kilocycles has been developed by Dr. F. H. Vreeland. When tuning the *balanced* circuits, they act as a *band selector* or *band filter* and allow the wave to come through corresponding to the dial setting at the exclusion of all others.[1]

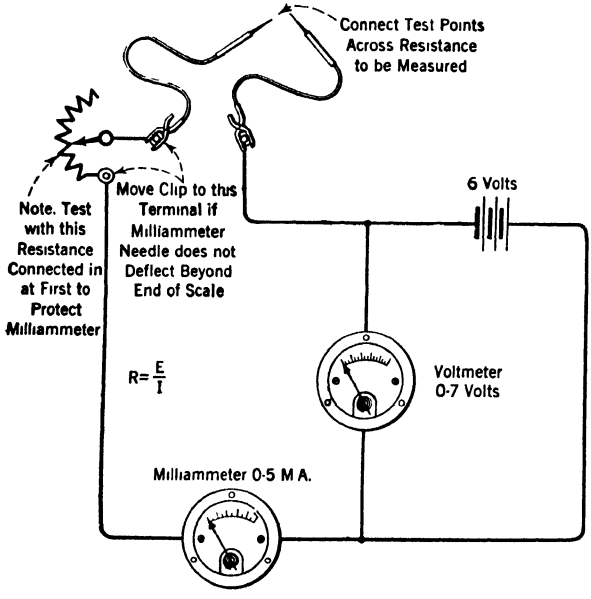

FIG. 219.—How a circuit may be connected for practical resistance measurements.

Checking Values of Resistance Units.—If a Wheatstone bridge is not available, the following method, called the *volt-ampere method*, may be used to check any resistance unit.

The set-up for the circuit is illustrated in Fig. 219 and it shows a 6-volt power source, which may be obtained from either dry cells or a storage battery. The d-c. voltmeter, with scale 0–7 volts, and the d-c. milliammeter, with scale 0–5 m.a., are used to obtain readings when the circuit is connected across the resistance to be measured. It would be desirable to

[1] See the *Proceedings* of the Institute of Radio Engineers, Vol. 16, No. 3.

insert a rheostat, as shown, in series with the circuit when first connected to the apparatus to be measured, for it may be possible that the unit being tested is short-circuited and therefore defective. This opens up the possibility of burning out the milliammeter. To safely operate this circuit add all of the resistance in the rheostat at first, then gradually cut out resistance until it is quite positive that the meter needle will not move beyond the upper limits of the scale. Then this rheostat may be removed and the circuit connected as usual.

The resistance is calculated by applying Ohm's Law:

$$R = \frac{E}{I}$$

where R equals ohms, I equals current in amperes, and E equals volts.

The current indication on the d-c. meter is in units of a milliampere; therefore it will be necessary to multiply the reading obtained on the voltmeter by 1000, and then divide by the reading obtained on the milliammeter as indicated by the formula in the diagram.

A milliammeter with a larger reading scale can be used when resistors are to be measured having low resistance values. It is inadvisable to lower the voltage, because this may affect the accuracy of the computation. When using the small 0–5 milliammeter scale connect the test circuit only across complete voltage divider resistors and not across the individual units.

CHAPTER XIII

ALTERNATING CURRENT RECEIVERS—RECEIVING AND RECTIFYING TUBES

A-C. Operated Superheterodyne Receiver.—The schematic diagram of an a-c. operated super-heterodyne receiver is given in Fig. 220. A top view of the receiver chassis is shown in Fig. 220*a*. The types of tubes required in each socket and the electrical rating of various parts are indicated on the diagram. An electrical description of this circuit,

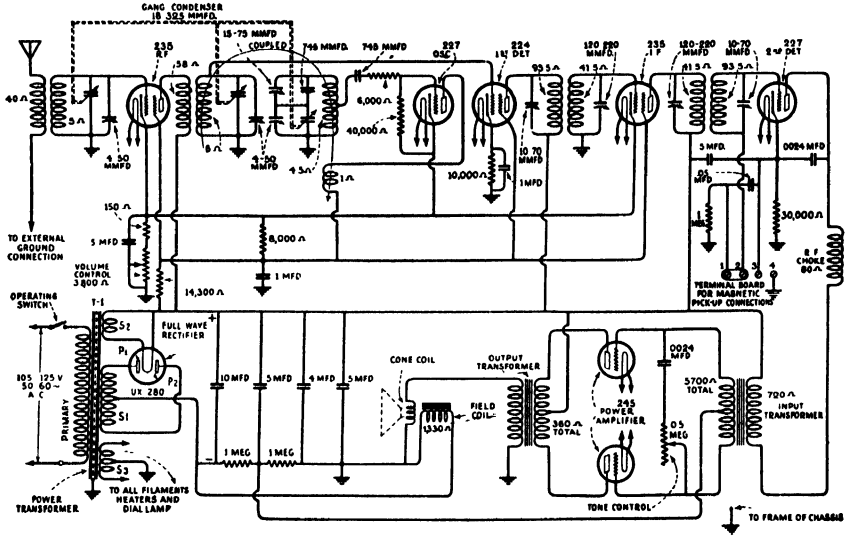

FIG. 220.- Schematic diagram of an a-c. operated superheterodyne receiver. It employs the new super-control screen-grid tubes in the r-f and i-f stages. A tube of this type is also known as a variable mu tetrode.

which is a typical one showing the modern trend in radio receivers, is given as follows: The grid coil of the r.f. stage is coupled to the antenna through a coil of high inductance connected from antenna to ground. Variations in the antenna system have but a slight effect on the tuning of the adjacent circuit because this coil has a sufficiently high value of inductance. The tube used in the tuned radio-frequency stage, marked

235, is a super-control screen-grid tube, also called a *variable mu tube.* This tube has a grid-potential plate-current curve that has no pronounced "knee." This characteristic reduces the tendency

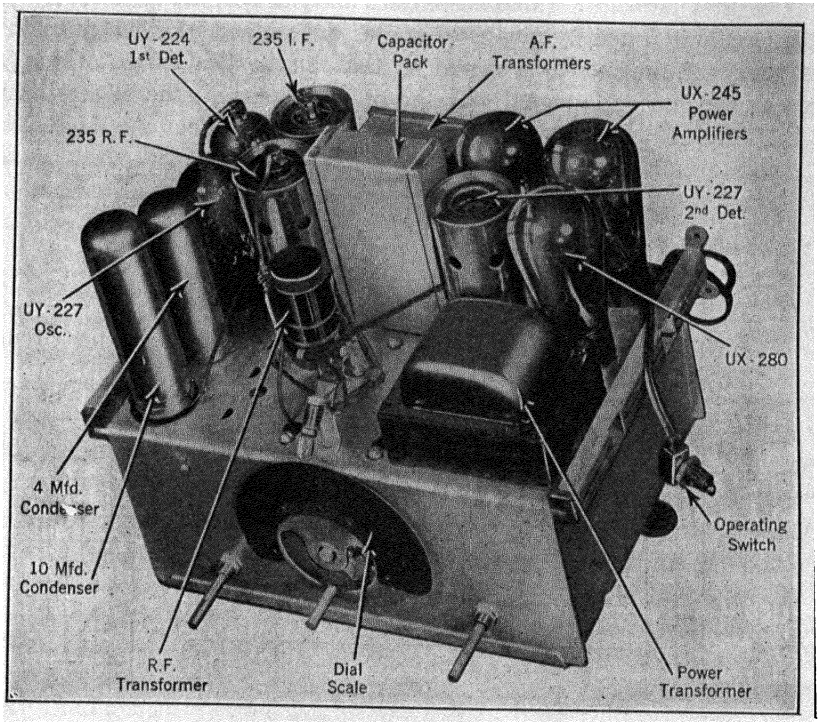

FIG. 220*a*.—Top view of an a-c. operated superheterodyne receiver chassis showing location of tubes and parts.

of the tube to become a detector when the control grid voltage is raised by the volume control. A characteristic of this kind means that secondary modulation effects will not be obtained and distortion due to high signal intensities will not develop, and also, improved volume control action and elimination of the local-distant switch are obtained through the use of this tube. Other characteristics, such as gain and so forth, are approximately the same as those of a 224 tube.

The output of the r.f. stage is inductively coupled to the grid coil of the first detector. At this point note that the oscillator's output is also coupled inductively to the grid coil of the first detector. This forms a tuned grid circuit oscillator using a 227 tube and having a closely coupled plate coil that gives sufficient feed-back to provide stable operation. The grid circuit is so designed that by means of a

correct combination of capacity and inductance a constant frequency difference between the oscillator and the tuned r.f. circuits throughout the tuning range of the receiver is obtained.

The first detector, which employs a 224, is now to be considered. This circuit is tuned by means of one of the ganged condensers to the frequency of the incoming signal so that in the grid circuit there is present the incoming signal and the oscillator signal, the latter being at a 175-kc. difference from the former. The first detector is biased so

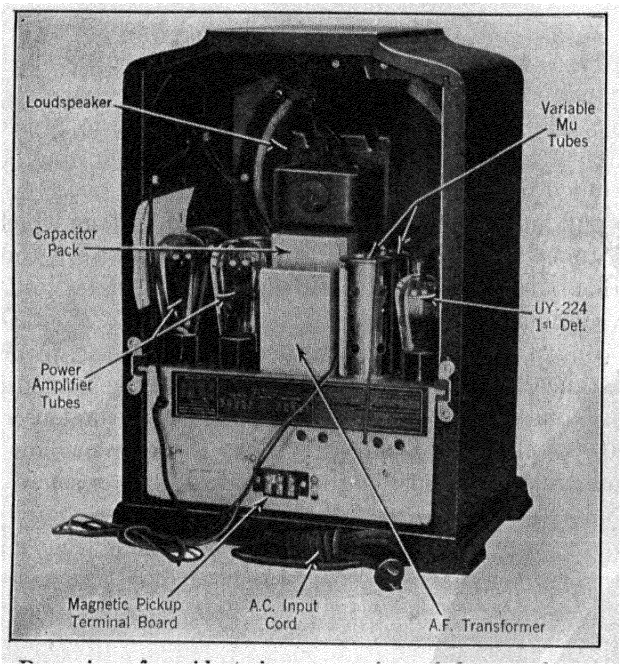

FIG. 220*b*.—Rear view of a midget size a-c. receiver of the superheterodyne type.

as to operate as a plate rectification detector or power detector, and its purpose is to provide the beat frequency which results by combining the signal and oscillator frequencies. The beat frequency, or 175 kc., flows in the plate circuit of the first detector which is accurately tuned to 175 kc.

After the first detector there is the intermediate frequency (i.f.) amplifier which uses only a single stage of amplification to build up the i.f. energy. This requires two i.f. transformers consisting of four tuned circuits. The plate circuit of the first detector, the grid and plate circuits of the i.f. amplifier and the grid circuit of the second detector are all tuned to 175 kc. The transformers are peaked, no

attempt being made for flat-top tuning. A variable mu tube is used in this stage, and its control grid voltage is also varied by means of the volume control.

The second detector, or the so-called audio detector, is a high-plate voltage, grid-biased type, operating as a power detector. It uses a 227, which gives sufficient output to drive two 245 tubes connected in push-pull without an intermediate audio stage. The purpose of the second detector is to extract the audio-frequency component of the r.f. signal which represents the voice or musical modulations produced in the studio of the broadcasting station. The audio component is delivered to the grids of the power tubes while the r.f. current is by-passed and does not enter the audio system. To further reduce any small a-c. hum voltages that may be present in the detector stage there is a filter circuit consisting of a 0.05-mfd. condenser and 1-megohm resistor included in the second detector grid circuit.

A push-pull amplifier is used for the power a.f. stage which consists of two 245 tubes and coupling transformer used between the detector and the grids of the 245's and between the tube plates and the cone coil of the reproducer unit.

A tone control, which functions to reduce the high-frequency output as the resistance is reduced, is connected across the two grids of the 245's. This tone control consists of a 0.0024-mfd. condenser in series with a 500,000-ohm variable resistor. At the extreme low position, the condenser and secondary of the a.f. transformer resonate at a low frequency and thereby further accentuate the bass response, thus partially compensating for the lack of a large speaker baffle surface.

A full-wave 280 rectifier serves to rectify the high-voltage alternating current and supplies the direct plate and grid voltages used by all the tubes in the receivers. The filter used is of the " brute force " type employing the field of the reproducer unit as the reactor or choke coil. In the filter system we find electrolytic type condensers of 10- and 4-mfd. capacity respectively used before and after the reactor as indicated on the diagram, also two 0.5-mfd. condensers in the filter circuit function to by-pass any r.f. current that may be present. The bias voltage required for the grids of the 245's is obtained by using half the voltage drop, or about 100 volts, across the field coil of the reproducer unit which provides bias voltage of about 50 volts. The two 100,000-ohm resistors shunted across the field coil act as the voltage dividing resistor from which this bias voltage is obtained.

Alternating-current Tubes and their Requirements—Filament Type.—When alternating current is supplied to the filaments of the conventional battery operated tube a hum will result, due to the cur-

rent changing through an alternating current cycle. The temperature of the filament depends upon the strength of the current flowing through it. Since an alternating current continuously increases and decreases in value from zero to a certain maximum during each half-cycle, the change in filament temperature results in a hum at twice the frequency of the supply.

The capacity effect between the grid and filament and the voltage drop along the filament contribute to the hum.

When direct current is supplied to the filament, the conditions of filament temperature are stable and the effect of the grid at either end of the filament causes no disturbance. However, when an alternating current is supplied to the filament, the grid effect is continuously variable. While the current increases through the filament during an alternation (half-cycle), one end of the filament is increasingly negative with respect to the other, and the emission of electrons therefore will reduce from that end of the filament, while the other end is more positive and will attract a part of its emission current. At each half-cycle this effect is reversed, resulting in a hum twice the frequency of the a-c. supply.

In order to minimize the hum effect, and reduce it to a value less than the noise level of the signals received, a short and thick filament wire is used in the a-c. tube. More current is required to raise its temperature, but it retains the heat longer and there is less cooling as the alternating current goes through the parts of its cycle when diminishing to zero. Sufficient heat is produced to maintain a uniform temperature from one cycle to another. The oxide-coated filament of this type requires a longer time to reach its operating temperature, but, being insensitive to varying potentials applied to the filament terminals, it remains at a constant temperature.

In order to eliminate the hum due to the non-uniform voltage drop across the filaments, the grid is connected to the average potential of the filament, which is the potential at its center point. It is obvious that no center connection is made at the filament wire within certain types of tubes, so that the most satisfactory means of obtaining this electrical balance is by shunting a resistance across the filament terminals and then connecting the grid to a center tap on this resistance. As found in typical circuits, the transformer heater or filament winding is supplied with a mid-tap which is electrically centered.

The center point, or mid-tap, on the winding is at the same potential as the center of the filament. This is called the *electrical center* of the filament. The electrical center is really that point in a filament (cathode) wire which when heated by alternating current is taken as the

datum of potential in comparing the magnitude of the electric potential on either the plate or the grid relative to the filament. A datum point or line is a base line (or it might be called a zero point) from which other potential levels are calculated. The negative terminal of the filament is usually taken as the datum of potential when the cathode is heated by direct current.

Rectifying (Power) Transformer.—To secure the necessary plate voltages to operate the receiving tubes under load at their maximum plate voltages, the rectifying transformer, in Fig. 220, called the power transformer, has a high voltage secondary coil S_1, or plate coil, and two low voltage secondaries, S_2 and S_3. Winding S_2 feeds the filaments of rectifier tube UX-280, and winding S_3 supplies current to all receiver tube filaments, heaters and dial lamp.

Full-wave Rectifier Tubes.—The CX-380 and UX-280 tubes are full-wave rectifiers of the filament type designed for circuits requiring greater d-c. output than is afforded by the standard rectifier UX-213. The UX-280, shown in Fig. 221, gives a d-c. output current of 125 milli-

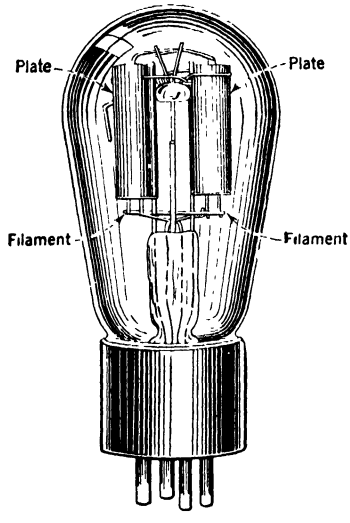

FIG. 221.—A full-wave rectifier tube, type UX-280, which is used in the power unit of an a-c. operated receiver to convert alternating current to direct current.

amperes, and may be used interchangeably in a radio circuit designed for the UX-213, rated at 65 m.a. output, but the increased d-c. output of the larger tube will be secured only in circuits especially designed for it.

The CX-380 (UX-280) has two filaments connected in series heated

by alternating current from section S_2 coil on the transformer, Fig. 220. Two plates are used to obtain complete rectification, each one being connected respectively to opposite ends of winding S_1, the mid-tap of which represents the negative side of the d-c. circuit. The action of the tube briefly is that when the filament is heated to normal temperature the emission of electrons in large quantities is brought about. The electrons are attracted only toward the plate upon which a positive electric charge exists. An alternating e.m.f. is induced across coil S_1 when alternating current flows through the primary coil. Hence, plates P_1 and P_2 are charged alternately with a positive and negative potential. When P_1 is positive, electrons move toward it and the conduction of current is through the upper half of S_1, and then to the external d-c. circuit by the mid-tap connection.

On the next swing of the alternating e.m.f. across S_1, plate P_1 becomes negative and electrons are repelled because of the similarity of the charged bodies (electrons and plate both being negative), resulting in no current flow through the upper half of S_1, but plate P_2 at this instant is charged positive and electrons will be attracted toward it. The movement of electrons, which constitutes a current flow, will cause current to pass through the lower half of S_1 and thence to the external circuit through mid-tap on S_1. The output current flows in only one direction (direct current), owing to the one-way conductivity of the thermionic rectifier tube. The electron movement is from filament to plate within the tube. It will be noticed that the leads from the filament coil and plate coil of the rectifier output are marked respectively + and − according to convention.

Half-wave Rectifier Tubes.—The UX-281 is a half-wave rectifier, having one filament and one plate, and is similar in appearance to the UX-216-B, although of increased physical dimensions. The plate, which is blackened, is tall and narrow. The tube is interchangeable mechanically and electrically with the UX-216-B in all "B" battery eliminators or radio rectifying devices primarily designed to use the latter tube. The UX-281 has a d-c. output of 110 millliamperes as compared to an output of 60 m.a. for the UX-216-B. The increased output of the larger tube will be secured only in circuits especially designed for it.

Filter System.—The two plates of the rectifier tube, working alternately on successive alternations of the a-c. cycle, produce full wave rectification and deliver a pulsating or undulating direct current to the filter system. The filter system shown in Fig. 220 consists of a choke coil (field coil) shunted by condensers in the manner indicated in the diagram. The function of the filter is to smooth rectified pulsations

and deliver a steady and unvarying direct current to the tube circuits. The choke coil has a large self-inductance and acts to prevent any changes in current. It is wound with wire of adequate size to prevent heating and to lower the normal resistance of the winding to the steady direct current flow.

CX-326 and UX-226 A-C. Amplifier (Filament Type) Characteristics.—The UX-226 a-c. tube has operating characteristics similar to those of the 201-A type, but uses unrectified alternating current obtained from a step-down transformer to energize the filament, thus eliminating the usual "A" battery.

The a-c. filament of the tube is of the oxide-coated type which operates at a red heat and does not glow brightly. The filament is made with a large size wire to maintain constant temperature, drawing 1.05 amperes at 1.5 volts alternating current. The filament temperature is not greatly affected by the varying strength of the alternating current which makes it generally suited for use in any amplifier stage with the exception of the last stage, but the power tube has now become standard equipment in the output stage because of its greater efficiency in handling enormous signal voltage variations applied to the grid. Also, the heater-type a-c. tube, UY-227, explained below, has a distinct advantage over the UX-226 when used in the detector stage. The detector is quite sensitive to grid potential variatons and is apt to produce a hum when the filament itself is the cathode member, as in the UX-226. On the other hand, in the heater type, UY-227 there is less likelihood of the grid being affected and producing a hum, because the cathode is more or less isolated from the a-c. filament circuit.

The filaments of all UX-226 tubes in the receiver should be connected in parallel and the windings of the power transformer supplying the filaments should be capable of delivering 1.05 amperes at 1.5 volts as measured at the socket to each tube used.

UY-227 A-C. Cathode Heater Type.—The UY-227 a-c. tube contains a separate heater element, equipped with five prongs on the tube base and requiring a special socket. In place of the usual filament, the electron emitting element, or cathode, in this tube consists of an oxide-coated metal sheath on a cylinder of insulated material similar to porcelain. Inside the cylinder element (cathode) is placed the heater filament wire which draws 1.75 amperes of current at an a-c. terminal voltage of 2.5 volts. The cathode is indirectly heated through the insulating material and thus made active by the high temperature of the filament.

The electron emitting cathode being heated indirectly will require a longer time for it to reach its normal operating temperature than

with the ordinary tube in which the cathode is its own filament. This proves to be the case, for there is appreciable time between the turning on of the heating current and the reception of the signal, being a matter of about 10 seconds or more. The heater type tube has been brought to the point of practicability by the use of the oxide-coated strip outside and insulating cylinder which surrounds the filament instead of the inverted thimble which was employed in the early experiments.

The UY-227 is satisfactory as a detector tube, because of its freedom from ripple voltage at low plate currents. During operation all parts of the cathode surface remain at uniform potential with regard to the grid and for this reason the heater type is said to have an *equi-potential* cathode.

The use of the expression "equi-potential" should be easy to understand when it is remembered that a wire or body (the cathode cylinder in this case) cannot be considered as being either positive or negative when standing alone. In order to have a definite polarity, the grid must be considered with respect to some other part of the same circuit. For example, in a regular tube where the filament wire is the cathode itself, a voltage gradient exists along this wire with regard to the grid. It is obvious that in the latter case such a condition must prevail, for when we say that one end of a filament is negative it is apparent that we mean in respect to its opposite or positive end.

The UY-227 will operate efficiently as a radio- or audio-frequency amplifier. In the last audio stage of all electrically operated receivers the regular filament-type power amplifier tube is generally used because it gives satisfactory performance.

Screen Grid Vacuum Tube. Four-electrode Tube. UX-222 and UY-224 Self-neutralized.—The salient feature of this tube is that the need of neutralization is eliminated. The purpose in designing the four-element tube was to neutralize the effective inter-electrode capacity *within* the tube rather than in the circuits *external* to the tube. Other forms of neutralizing or balancing methods employed are unnecessary because this effective capacity is appreciably reduced between elements of the tube. This reduction is accomplished by the addition of a second grid, called the fourth element, which acts as a shield or screen inserted between the usual control grid and plate of the tube. The shield grid is made simply of a fine meshed wire and it is maintained at a low radio-frequency positive potential with respect to the normal operating grid and plate e.m.f.'s.

The ordinary three-element tube, when used in a radio-frequency circuit, requires some form of neutralizing or balancing of circuits to prevent the generation of oscillations caused by the small capacity

existing between the plate and grid when these respective bodies are electrically charged. This inter-electrode capacity in the ordinary 201-A type tube is about 10 micro-microfarads, being sufficiently large to furnish a path of low reactance (opposition) to the passage of radio-frequency energy from the plate to the grid circuits, resulting in a feed-back of energy which sets the tube into oscillation. Uncontrolled oscillations are manifested by squealing, howling, and other undesirable effects, reproduced in the loudspeaker.

The simple circuit diagram in Fig. 222 shows the plate supplied with a higher potential than the screen grid. There is a negligible space

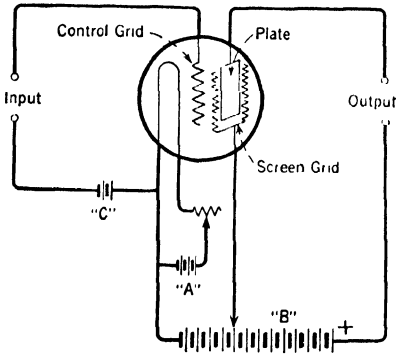

FIG. 222.—An elementary diagram of the circuit connections of the four-electrode screen grid vacuum tube.

charge between the screen (due to its positive potential) and the plate. The electrons emitted by the filament move toward the plate passing through the control grid and on their way to the plate they encounter the screen grid with its positive charge. Only a few electrons are caught by the screen grid because at this point the higher positive potential on the plate accelerates the electrons, causing greater quantities of them to pass through the screen (they are actually pulled through by the positive charge on the plate) to be collected by the plate.

As a result of the radio-frequency current variations in the plate circuit of a three-electrode r.f. amplifier tube, the potential existing on the plate also varies and is reimpressed back upon the control grid by the electrostatic lines of force set up between the plate and the control grid. This effect, due to variations in plate voltage, constitutes a feed-back of energy upon the regular control grid and is the direct cause of the generation of uncontrolled oscillations, thus making neutralization necessary. Although the capacity between grid and plate cannot be

entirely eliminated even by the shield grid, because of the fact that both the control and shield grids are charged bodies occupying a position in the electronic stream which flows from filament to plate, it is said that

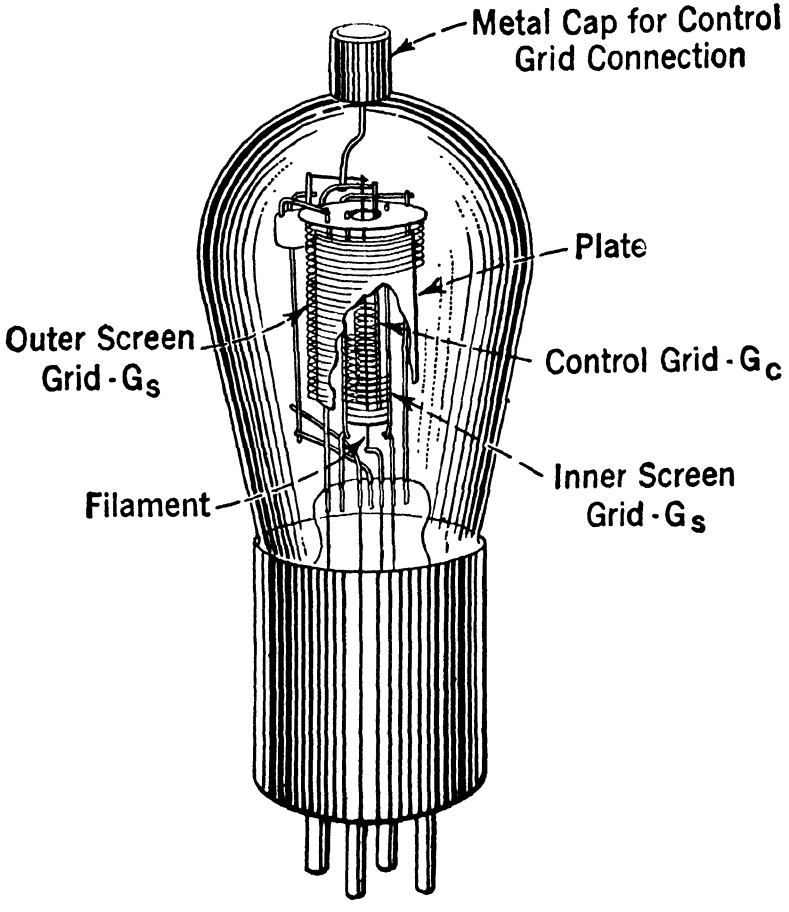

FIG. 223.—An exposed view of the electrodes in a four-element vacuum tube. Note particularly the location of the outer and inner screen grids.

the effective capacity is practically canceled, being reduced to the order of a hundredth part of a micro-microfarad.

The shield grid cannot be made solid, like the plate construction, nor can a potential of negative character be applied to it, for in either case the normal flow of electrons to the plate would be obstructed. It is seen that the shield is of open mesh-like construction in the form of a coil which allows electrons to pass between its turns of wire and reach the plate.

The four-element tube differs from the ordinary tube in its external physical appearance by the addition of a metal cap at the top of the glass envelope. This small cap forms the connection to the regular control grid. Being located at the top of the tube it decreases the capacity effect which would otherwise exist between the leads, if the lead were brought down through the base in the customary way. The screen grid is connected to one of the base prongs. This arrangement permits the standard four-prong UX-type base to be used for the filament-type screen-grid tube, and the standard five-prong base for the heater-cathode type screen-grid tube, or type UY-224.

It was found necessary to form the screen electrode of two members in order not to block the normal electron flow between the filament and the plate. The plate is enclosed by the screen grid, the latter being

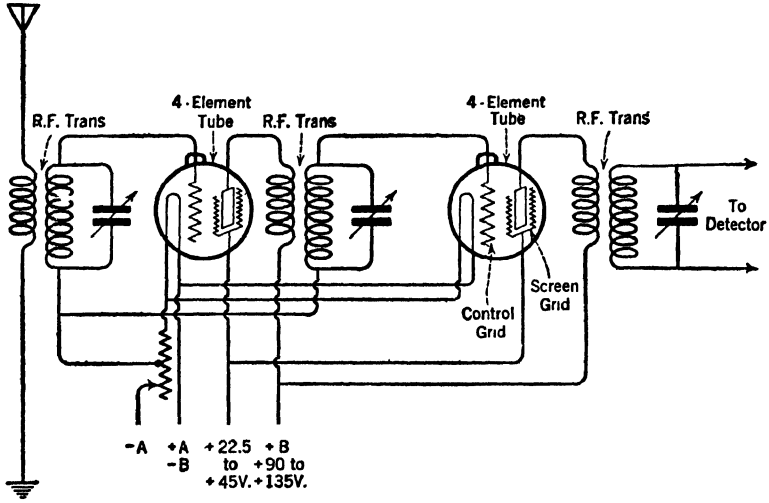

FIG. 224.—This simple schematic diagram is given only to show the relation between tuned r.f. circuits and the electrodes of screen-grid tubes of the d-c. or UX-222 type. Fig. 220 shows the use of a-c. screen-grid tubes and how a by-pass condenser, marked 1 mfd., is connected between screen grids and the ground side in a practical circuit.

connected to a lead running through the base of the tube, and finally connected to the prong which ordinarily serves as the grid connection in standard vacuum tubes. The screen grid is connected to the positive terminal of the "B" battery, or voltage divider system, depending upon the source of voltage. The "B" battery or voltage divider system may be the same one that supplies the e.m.f. to the plates of other tubes in the receiver. Since the positive electric charge on the screen grid tends to neutralize the negative space charge the screen grid thus acts to a limited extent like a positive plate. Consequently, when the regular

control grid receives a signal voltage it will act more effectively in varying the plate current, than would a control grid operating in a strong negative field where the space charge had not been partially neutralized. The effectiveness of any electric charge on the control grid in controlling the plate current accounts for the high amplification possible with this tube.

A circuit arrangement using a screen-grid tube as a radio-frequency amplifier, with transformer coupling, is shown in Fig. 224. The external grid and plate circuits (coils, condenser and leads) may be separately enclosed in metal housings or compartments, which are grounded, acting as a shield between the oscillatory circuits to prevent coupling effects. The metal cap at the top of the tube completing the control grid is in some cases connected to the external circuit with a shielded wire. A special metal shield covering the tube is necessary because of

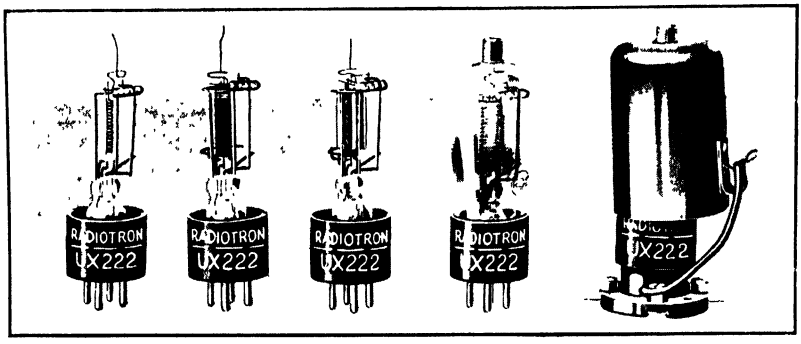

FIG. 225.—UX-222 four-electrode tube. Views show the electrodes, complete assembly, and metal cap in position.

the tube's sensitivity to external influences. A view of the shield is given at the right in Fig. 225. The view of the tube without the special shield shows the fine grid coil forming the outer screen grid.

Pentode Tube.—The pentode tube is constructed with five electrodes, shown in the sketches, Figs. 226*a* and 226*b*, which consists of three grids and the usual plate and filament electrodes, as in other tubes. A good understanding of the purpose of the extra grids in pentode tubes will be obtained by reviewing a few points on the detrimental effect caused by electrons that constitute the space charge in a tube. It should be recalled that electrons which reach the plate are in fact the so-called plate current and also that all electrons are negative particles and hence set up a strong repulsion for one another.

In the chapter on vacuum tubes it was explained that the cloud of

electrons that congregate in the space between filament and grid constitute what is known as the space charge. These electrons tend to oppose other electrons which might come near them, as, for instance, the electrons which reach the plate and constitute the plate current. Hence, all electrons on their way to the plate are interfered with by the presence of the space charge electrons. Now, if we could get rid of all space charge electrons, that is, remove the opposition caused by the space charge, then more electrons would reach the plate for a given plate voltage and thus increase the flow of plate current. So, by placing an additional grid in a screen-grid type tube and supplying it with a positive potential of some value less than the plate potential,

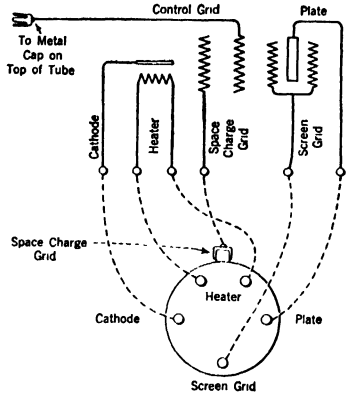

FIG. 226*a*.—This sketch shows the arrangement of the connections between the electrodes within a cathode-heater type pentode tube and the prongs and terminal on the tube base; also the metal cap on top of the glass envelope.

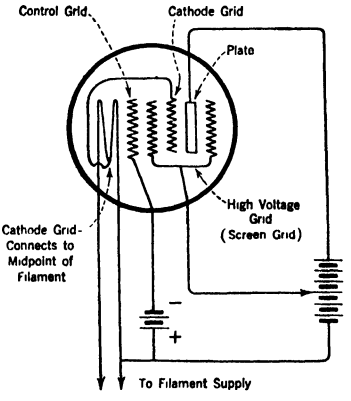

FIG. 226*b*.—Showing in a general way the relation of the electrodes of an a-c. filament type pentode tube and the principles of voltage supply.

the extra grid will either attract the space charge electrons or neutralize their effects. This is the purpose of the screen-grid tube. In any event the net result of its use is the removal of the unwanted space charge electrons. But this brings about another condition. It allows the other electrons to go rushing toward the plate at a high velocity and consequently they strike it with such force that new electrons are released from the plate by the impact. These new electrons are known as secondary electrons and the action is called *secondary emission*. The secondary electrons having been freed from the plate move toward the positively charged grid, or in a direction which is opposite to the normal flow of electrons. It is obvious that any reverse

flow of electrons within the tube will buck or oppose the normal flow of electrons and hence reduce the plate current.

As previously explained, in the screen-grid tube the extra grid or screen grid which is located between the control grid and plate operates with a high d-c. positive potential but a low r.f. potential relative to the filament or cathode, or in other words the screen grid shields the control grid from the plate and reduces the grid-plate capacity which effectively prevents oscillation. Moreover, the extra screen grid tends to reduce the space charge and any reduction in the opposition set up by space charge electrons accounts for the increased plate current variations for given amounts of signal voltage applied to the grid. That is to say, the lowering of the space charge by the action of the screen grid accounts for the extremely high amplification factor of these tubes. So much

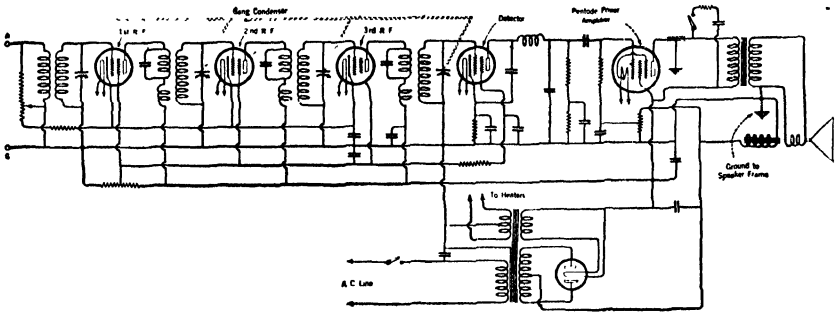

FIG. 226c.—Schematic diagram of a screen-grid radio-frequency receiver employing a pentode tube for the output and a screen-grid tube in the power detector circuit.

for the regular type screen-grid tube. Note that it does not do away with secondary electrons.

This is where the pentode tube with its extra grid inserted between the plate and the screen grid goes a step further; this grid serves to eliminate the troublesome secondary electrons as we will explain. Observe the schematic diagram in Fig. 226c and the fundamental tube circuit in Fig. 226d which show the location of the extra grid and connection to the filament; this connection places the grid at ground zero potential. The effect of all this is to cause any electrons released by the plate to be drawn back to the plate for two reasons, first because of its attractive force and second because the extra grid does not offer any attraction for them on account of its zero potential characteristic.

Now let us trace the movement of electrons from filament to plate in a pentode tube to explain the effect of the extra grid on the secondary electrons. The first thing to consider is that electrons are emitted

by the filament and next that these electrons as they move outward encounter the control grid which during reception of a signal has a varying voltage impressed on it while at the same time it is continually supplied with a negative bias voltage, or "C" bias. The wide spaces between the turns of the grid coil allow a large number of electrons to pass on through and they travel toward the screen grid and plate because these electrodes are supplied with a positive potential and offer a strong attraction for them. Assume now that the electrons arrive in the region of the screen grid, with its positive potential. Owing to the high velocity at which the electrons are moving and the widely spaced openings of the screen grid, the electrons will either be attracted to this grid, or will be neutralized by it, or will rush on toward the plate, but in any event they will not remain in this region to form a space

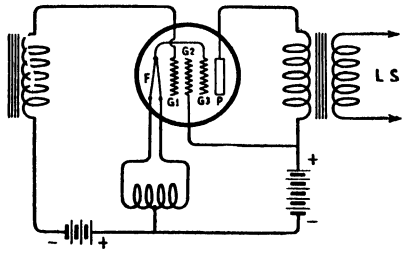

FIG. 226*d*. Another way of representing the arrangements of the electrodes in a pentode tube. *F* is the filament, it being heated by a-c. from the power transformer to which it is connected, *G*1 the control grid, *G*2 the screen grid, *G*3 the cathode grid, and *P* the plate. This is a fundamental diagram showing the relation of the tube's external circuits.

charge. Now assume that the electrons arrive at the pentode's extra grid or the cathode grid, also called zero potential grid. They will continue on to the plate because of its attractive force, preferring to do so because the zero potential grid does not attract them. Next, suppose that the plate has been hit so hard by these electrons that new ones are released, that is, we have secondary electrons around the plate. These secondary electrons will be immediately pulled back by the plate since the zero potential grid has little or no attraction for them, as just stated. Naturally then, if secondary electrons return to the plate from whence they came there will be no loss of plate current. Remember that whenever electrons are attracted to the grids in the tube they flow as direct current through the grid circuits and this represents a loss in plate current.

The practical purpose behind all the experimental work on pentode tubes, or tubes of the five-element type, is to construct a power tube that will deliver considerably more a-c. power for a given d-c. power

than is possible to get from the usual type of power tube. For example, such a tube to be practical must give the necessary 1 or 2 watts of power needed to drive a loudspeaker circuit with only comparatively low values of grid excitation. Because of its special grid construction the tube will have a high mu or high amplification factor.

Variable-Mu Tetrode or Super-Control Screen Grid Tube.—This tube is unlike ordinary tubes in structure; it may have, for example, electrodes with variable diameter, cathodes placed in tilted and eccentric positions, control grids of variable pitch where the spacing between turns is wider at one point than at some other, and so on. The electrons emitted from various elements of the cathode surface cause the mu factor to vary. Hence, with a low grid bias, as for example, a bias which is nearly zero, current flows from all of these elements, but with increasing negative bias the mu factor decreases continuously because the current

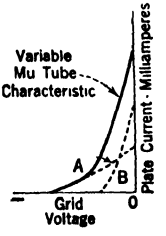

FIG. 226*e*.—Curve A is a low-mu tube characteristic and curve B a high-mu characteristic. The long curve in solid line is a variable-mu tube characteristic and is a combination of the A and B characteristics.

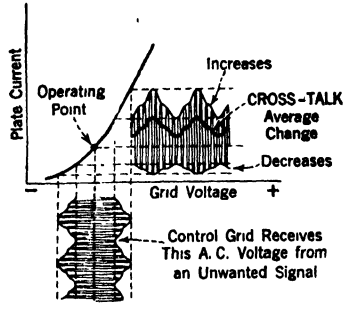

FIG. 226*f*.—Curves showing that cross-talk is due to the operating point shifting along different locations on the lower knee by the grid bias from an unwanted signal which modulates the desired signal.

from those parts having the higher mu factors is gradually cut off. Thus the mu factor of this tube decreases continuously with increasing negative bias and varies from point to point of the cathode area, whereas for the ordinary tube a uniform mu factor results because the action occurs similarly over the whole cathode area.

The tube functions in such a manner that when signal current flows in the grid or input circuit in effect the current selects a particular part of the tube's characteristic curve to operate on, called the working point, this action being governed by the carrier voltage of the signal. Thus the grid may be biased as low as 30 or more volts negative by a

strong local signal, whereas the working point selected by a certain desired signal whose signal voltage is comparatively low may be in the neighborhood of only a few volts or perhaps have some value less than a volt negative.

The variable mu screen-grid tube has a very practical application in radio receivers. It allows stronger signals to be fed into the r.f. amplifier without causing cross-talk and the ratio of the desired signal to the noise level is raised, which eliminates the hissing sound common in sets which use several stages of pre-selection. The ability of the tube to function as it does is used to advantage, because sets designed for this tube do not require, for example, either an antenna-ground potentiometer shunt or a local-distant switch to compensate for the difference in the strength of signals.

A simple way to explain the action of a variable-mu tube is to assume that we have two different types of tubes at hand, one being a low-mu and the other a high-mu tube. Now suppose that each tube's control grid is connected together, that is, in parallel arrangement and the two grids are then connected to the r.f. grid circuit in which the signal alternating current flows. With this arrangement each grid will receive an a-c. signal voltage. Then if each tube's plate circuit connects to a separate plate coil and these two coils are coupled to the secondary of an r.f. transformer (which would in turn connect to the grid of the following amplifying tube) the secondary would receive the amplified signal energy in accordance with the individual action of each tube as follows:

Refer to Fig. 226*e*. Note how each tube's characteristic curve differs as indicated by the dotted lines, curve A giving the low-mu tube's characteristic and curve B the high-mu tube's characteristic. Now the purpose is to show how it is possible to have one tube functioning alone combine the characteristics of both a high-mu and low-mu tube. The single tube would have a curve similar to the one shown by the solid line. This is the typical curve of a variable-mu tube and it is given this effect by special design of the tube elements as already mentioned. Curve A shows that a comparatively high value of negative grid voltage must be applied to the control grid to reach the point where electrons are completely blocked by this negative potential and hence the flow of plate current is entirely cut off. Curve B is different, showing that it requires only a relatively lower value of negative grid voltage on the control grid to cause the complete stoppage of electrons, that is, cause the plate current to be cut off. Two such tubes, A and B, working together in parallel would in effect give the solid line curve of the variable-mu tube; this curve indicates that a

higher values of grid bias tube A would provide most of the amplification and hence this tube would be the most effective under such conditions, whereas at lower values of grid bias tube B would provide most of the amplification. The long curve plainly shows that after the cut-off point of tube B is reached the signal is then amplified entirely by the action of tube A and in this case tube B would not be effective. A variation of the grid bias caused by the a-c. voltage of an incoming signal changes the amplification factor of the tube.

CHAPTER XIV

TELEPHONE RECEIVERS—LOUDSPEAKER REPRODUCING UNITS

Telephone Receivers.—The telephone receiver is an electrically operated device designed to convert alternating or pulsating direct current of audio-frequency carrying a signal wave form into corresponding sound waves. It changes electromagnetic energy into acoustic energy.

The radio telephone receiver is somewhat similar in construction to an ordinary land wire telephone receiver, consisting essentially of an electromagnet and a diaphragm, as well as a small permanent magnet.

The diaphragm is a circular disk of very thin soft iron mounted in the rim of the outer case or "ear-piece," so that its surface is held at a small distance from the pole faces of the magnet to form a small air gap. The diaphragm must not actually touch the ends or face of the magnet. Two such "ear-pieces" or units are connected in series, so that the current flows through both sets of magnet windings. A head band connects the two units, and the construction is such that the receiver caps may be adjusted instantly to fit the ear comfortably.

A simple bi-polar telephone receiver unit is shown diagrammatically in Fig. 227. The sectional view shows the mechanical relation of the parts where *D* is the diaphragm, *M* the permanent steel magnet, *AA* projecting soft iron pole pieces which serve as the cores of the electromagnet coils *CC*, and *F* the hard rubber or aluminum outer case, supporting the diaphragm all around its edge and also housing the magnets.

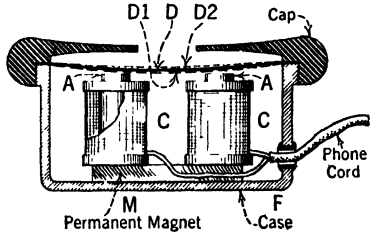

FIG. 227.—An exposed view of the bi-polar type receiver illustrating the operating principles.

The receiver ear-cap is made of a moulded composition, usually hard rubber, and screws on to the retaining case, thus serving to hold the diaphragm in place. The cap is perforated with small holes or one

large single hole in the center, to allow the sounds produced by the diaphragm to reach the ear.

Owing to the magnetic attraction of the permanent magnet the diaphragm normally will be strained, that is, pulled slightly towards the magnet. The bulge at the center is indicated by the heavy line *D*, which is called its *mean position*. Coils *CC* must be so wound that the electromagnetic fields they produce, when current flows, will make the pole faces of *A* and *A* respectively of opposite polarity.

The action of the simple bi-polar telephone receiver is as follows: When the receiver is connected in the plate circuit of the vacuum tube, at a time when no signals are received, a normal steady current will flow through windings *C* and *C* which energizes the electromagnet poles *AA* addition to the pull exerted by the magnetic field of the main magnet *M*. If, when signals are received, a current of larger value than normal passes through the coils in such a direction that the lines of force set up by it assist the lines of force emanating from magnet *M*, the total magnetic strength of the combined forces will be increased, and the diaphragm will be attracted still closer to the magnet from its normal (or mean) position to occupy the position as shown by the dotted line D_1.

On the other hand, if the plate current is decreased to less than its normal or average value the flux set up by coils *CC* will also diminish in strength and the total number of lines of force, those of the permanent magnet combined with the electromagnet *CC*, will be decreased and the diaphragm, being thin and flexible, will spring farther away from the pole faces of *AA* and take up a position shown by the dotted line D_2.

There is an unsymmetrical displacement of the diaphragm from its mean (normal) position *D*, as it moves away from and toward the poles when deflected by the change of magnetic flux in the electromagnet. This is easy to understand, because the permanent magnet is exerting a pull on the diaphragm at all times.

With a comparatively small displacement of the diaphragm at its center, the displacement of air will produce a large sound, in just the same way that the head of a drum, when hit with a drumstick, will produce a loud sound for a slight movement at its center.

If an alternating current which is modulated to carry a signal wave flows through the coils *CC* at an audio-frequency, the diaphragm will be deflected, as in the case when a pulsating direct current (one which rises and falls in value, but does not reverse in direction) passes through, as explained in the above action. When an alternating current is supplied to coils *CC*, the current is sent through at one alternation in such

a direction that the lines of force surrounding the coils assist those of the permanent magnet, thus increasing the attraction for the diaphragm. At the next alternation, the current will flow through the coils in the opposite direction, thus setting up magnetic lines of force opposing those of the permanent magnet M, and resulting in a weakening of the magnetic pull on the diaphragm. Also, an alternating current carrying a signal not only reverses in direction at every half-cycle, but the amplitudes of the successive alternations vary in strength, according to the form of the signal wave. The magnet coils of a reproducing unit are supplied with alternating current when connected to the output of a vacuum tube audio amplifier through a coupling system consisting of either an output transformer or a choke (impedance) coil and condenser, of which a description is given in a subsequent section.

Dependence of Signal Strength upon the Resistance and Ampere-Turns of the Magnet Coils.—It has been shown that the magnetic attraction of the electromagnet acts to move the diaphragm in proportion to the strength of the current flowing through the magnet coil windings, but it must be understood that the magnetization force or *magnetomotive force* generated by the electromagnet depends upon two conditions: (1) The strength of the current (in amperes) passing through the coils, and (2) the number of turns of wire comprising the coils.

The product of these two factors determines the flux produced by the coils. For instance, when only a feeble current is available, a magnet wound with a great number of turns of fine wire will generate a large magnetizing flux. The product of the foregoing two factors (1) $\times$ (2), is generally referred to as *ampere-turns*.

The bulk of the coil windings is limited because of the small space available in the retaining case, and the only way of increasing the number of turns that can be wound on the magnet cores is to decrease the size of the wire. In practice, the coils are wound with the very finest enameled copper wire manufactured, ranging in gauge from about No. 36 B & S to No. 40, and a few sizes above. The bobbins (coils) wound with wire smaller than No. 40 require special care because the wire is almost as small as a human hair and very delicate.

Such a winding has a considerable resistance, but a greater magnetizing force will result from it than could be obtained from a winding of fewer turns using a heavier wire, when connected in a circuit traversed by feeble current.

It is obvious that as the size of the wire is reduced the resistance per turn of the wire will be increased and also as we increase the total number of turns, so do we increase the resistance of the coil in proportion. This would seem to be an unfortunate condition when such

limited current values are available, but it will be found that telephone receivers are always connected in circuits in which there is already a high resistance. For example, the plate resistance of a vacuum tube may be several thousand ohms and the insertion of the high resistance magnet coils in series with this circuit will not have so great an effect upon the total circuit resistance (therefore, the amount of current at our disposal gained by the increased magnetization force due to the large number of turns of wire), as might be expected. In other words, the total flux is raised by the increase in ampere-turns to a greater extent, or greater proportion, than it is decreased by the increase of resistance of that circuit.

High-resistance telephones have a resistance of approximately 1000 to 2000 ohms per ear-piece, and when two units are used and connected in series, the total resistance of a pair of telephone receivers will be about 2000 to 4000 ohms.

Although telephone head-sets are rated according to their resistance it must be understood clearly that their high resistance is not the primary reason for using them in radio circuits. Since they are wound with a *much greater number of turns* than low-resistance telephones, their resistance must necessarily be large. A magnet coil having a very high resistance could be wound with less than the usual large number of turns by employing a wire of a material which would possess a higher specific resistance than the ordinary soft drawn copper, but this condition is not desirable. The large number of turns is most effective in results.

Telephone receivers wound with a large number of turns will have a high impedance, making them especially suitable for use with a vacuum tube. When the external impedance matches the tube impedance, the maximum current is available.

As stated above, the gain in magneto-motive force is proportionally increased by winding a coil with a large number of turns of fine wire, even if at the same time the resistance of the coil is raised. This may be explained in the following way: Let us suppose that the external resistance of the circuit in which the receivers are connected is 8000 ohms, and that magnet coils wound with 1000 turns of a certain size wire will have a resistance of 500 ohms. The total resistance of the circuit is then 8500 ohms. If the voltage across this circuit is 50 volts, by substituting these values in Ohm's Law formula for direct current, it will be found that the current through the circuit will equal the voltage divided by the resistance or the current will be approximately 0.006 ampere.

The product of the number of turns times the strength of the cur-

rent in amperes equals the magnetomotive force; or expressed as an equation and inserting in it the foregoing values, we have

$$\text{Magnetomotive force (ampere-turns)} = \frac{6}{1000} \times 1000 \text{ turns} = 6 \text{ units.}$$

NOTE—Units give a numerical value of a ratio by which the magnitude of two or more effects can be understood.

Now, to compare the effect on the circuit by increasing the number of turns and the resistance: let us wind the magnet coils with a wire having one-fourth the former cross-sectional area and consequently we shall be able to crowd approximately four times as many turns on the bobbin as before, or 4000 turns. It follows that the resistance of the coils will have increased about four times. Assuming the resistance of the coils to be 2000 ohms and adding this to the external circuit resistance of 8000 ohms, we get a total resistance in the circuit of 10,000 ohms. For the same 50 volts applied across the circuit, we will now get 0.005 ampere of current, and by again applying Ohm's Law we find that the current flow is 0.005 ampere. By substituting these known values for number of turns and current strength respectively in the same equation for expressing magnetomotive force, we get

$$\frac{5}{1000} \times 4000 \text{ turns} = 20 \text{ units}$$

It is thus seen that the magnetic flux or magnetomotive force is increased more than three times by winding the coils with the smaller size wire, despite the fact that the resistance of the circuit was raised and the actual current lowered.

General Statement.—The sensitivity of the receiver is not determined solely by the ampere-turns of the coils, but includes the physical characteristics of the diaphragm, particularly its weight and flexibility. The average telephone head-set produces the greatest volume of sound when the frequency of the current change in the coils varies from about 300 to 1000 cycles per second. Frequencies in excess of this rate decrease the amplitude of vibration of the diaphragm, and consequently produce less sound.

It is known that the magnetic flux crosses the small air gap and saturates the metal diaphragm, exerts a pull on the latter and causes it to bulge in the middle. In the simple receiver, there is a limit in the amount of flux that can be utilized to saturate the diaphragm. The thickness of the diaphragm may be increased to allow the use of more flux, but this is objectionable because it increases the mass and rigidity of the diaphragm, making it less responsive to the higher audio-frequency currents.

The telephone receiver has a high degree of sensitiveness when used

in a circuit where moderate intensity of signal current flows, but where large current values are required the displacement of the diaphragm from its mean position becomes so great that distortion of the sound waves takes place. To obviate this difficulty, experienced when handling a signal of large volume, the receivers may be built according to a special construction, known as the *balanced armature* type, which, for its operation, takes into account neither the extreme accuracy necessary in the thickness of a diaphragm, nor its flexing ability.

Balanced Armature Type Receiver Unit.—A telephone receiver of the balanced armature type is shown in Figs. 228 and 229. The two constructions are slightly different, the magnet coils being mounted in

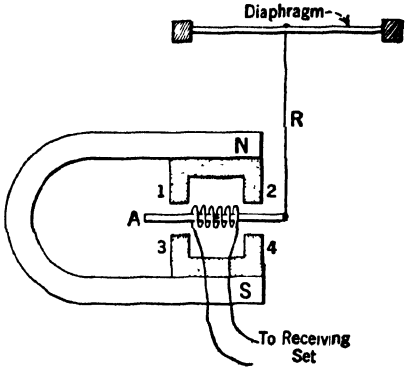

FIG. 228.

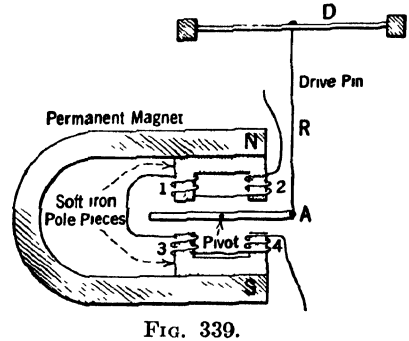

FIG. 339.

FIG. 228.—A balanced armature-type receiver showing the coils mounted over the armature.

FIG. 229.—A balanced armature-type receiver with the coils mounted over the soft iron pole extension pieces.

the first figure over the armature, whereas in the second figure the coils are mounted directly on the four poles.

The action of both types and the principle of operation are as follows: Let us suppose that when current supplied from the receiving set passes through the coils in a certain direction, the poles 1 and 4 are both strengthened because the flux produced by the coils assists the magnetic lines of force issuing from the permanent magnet, whose respective poles are designated *N* and *S*. If poles 1 and 4 are made stronger at any given instant, the poles 2 and 3 are weakened, causing the armature to be attracted in the direction of the stronger pair of poles. Conversely, if poles 2 and 3 are both strengthened, then 1 and 4 are weakened.

When no current flows through the coils, the soft iron armature

carries little or no flux, and the armature occupies a mid-position with equal spacing of the four air gaps between the pole tips. If the electromagnetic field produced by the coils is very strong, the armature will have a tendency to rotate clockwise, since the armature is supported in the middle by a bearing.

Either poles 1 and 4 will offer a greater attraction for the armature than poles 2 and 3, or vice versa, because of the reduction of the air gap between the armature and the faces of the poles when the armature moves. The magnetic reluctance of the air gap being lowered allows a larger magnetizing flux to saturate the armature.

The armature will be pulled over to poles 1 and 4 (or 2 and 3, depending upon which pair is the strongest at any instant) if the force called into play by the deflection of the diaphragm *D* is not greater than the force carried by the flux. The latter statement refers to the transfer of the energy in the moving armature to the load upon it. The force expended by the armature is used not only in overcoming the stiffness and inertia of the vibrating diaphragm *D* of the reproducing unit, but part will be spent in overcoming the radiation pressure of the air. Part of the load on the armature is governed by the volume of air displaced.

All movements of the armature are conveyed to the diaphragm *D* by the driving rod *R*, the latter forming a rigid connection between the end of the armature and the center of the diaphragm.

The soft iron armature will be deflected continually from its mid-position according to changes in the strength of the current in the magnet coils, but it cannot exceed a certain value without causing distortion or rattling, if the armature actually strikes the pole faces. The saturation of a metal diaphragm is not involved in this type, as in the case of the simple receiver unit; therefore coils producing much stronger fields can be utilized in this type, thus increasing the sensitivity of the unit.

The fact that the four-pole arrangement permits the deflections of the armature to be symmetrical with its mean position, and capable of handling large variations of flux with increased movements of the armature, makes it suitable for loudspeaker work because of the resulting large diaphragm displacements.

The diaphragm can be made of a non-magnetic material, which should not readily be set into vibration, being actuated only indirectly by the impulses of the armature transmitted through the driving rod or pin *R*.

Papier maché, balsam wood, certain fibers, specially treated cloths and compositions are the materials generally used for the diaphragm.

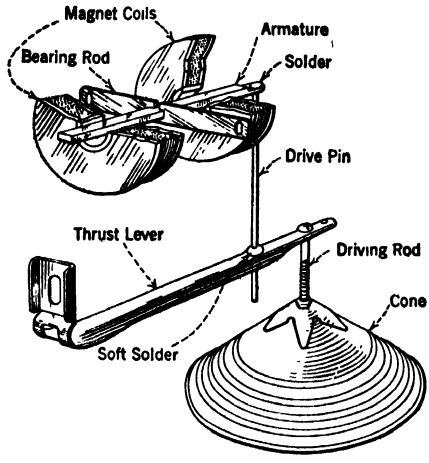

FIG. 230.— The action of the balanced armature type loudspeaker may be visualized by observing the constructional details shown.

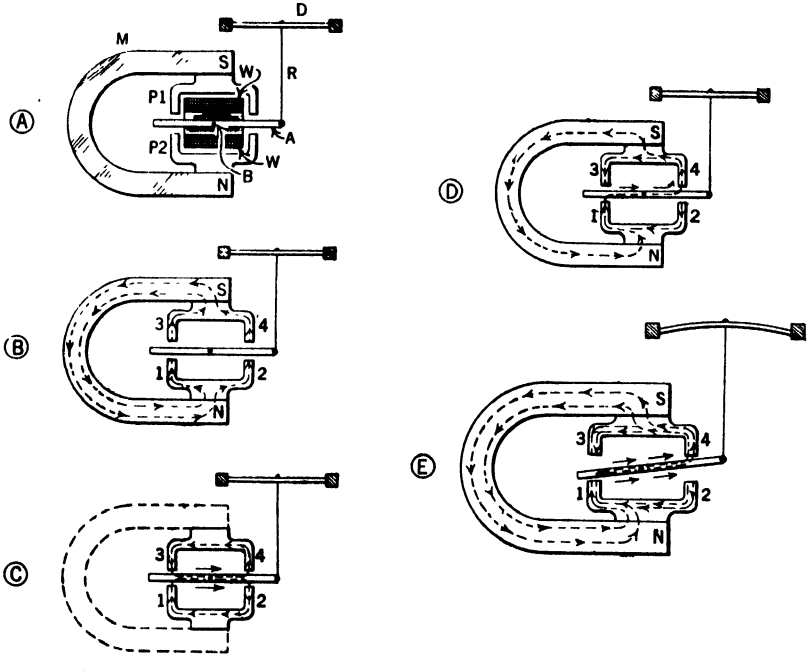

FIG. 231.—Step-by-step explanation showing how the distribution of the varying flux through the pole pieces caused by a signal current acts upon the soft iron armature of the balanced armature type receiver to cause the non-magnetic diaphgram to vibrate.

The diaphragm at its outer edge may be supported by a ring. It may be glued to soft material, such as buckskin, to allow freedom of motion.

The diaphragm may be shaped like a large disk, having only a slight conical shape, with the apex in the center or offset to one side. In Figs. 228 and 229 the diaphragm is shown as a flat disk whereas it may be conical in shape. The outer edge need not be exactly round or circular. A paper diaphragm having a longer taper and several corrugations in its surface is shown in the constructional details of Fig. 230.

Detailed Explanation of Action of the Balanced Armature Type Receiving Unit.—The telephone receiver developed by Nathaniel Baldwin operates similarly to the principles just outlined, and, owing to the general use of the balanced armature type reproducing unit, a detailed explanation of the action is presented.

The essential parts of the receiver are shown diagrammatically in Fig. 231. The permanent steel horseshoe magnet M with the poles indicated N and S is fitted with two U-shaped soft-iron pole shoes P_1 and P_2, which form extensions to the poles of the main magnet. The permanent magnet really forms more than a complete circle since the ends overlap. This is not shown in the diagram.

The magnet winding WW, concentrated in a single spool, is mounted longitudinally between the pole pieces, having a separation in the center in which is placed a soft iron armature A, balanced on its bearing point B. This armature is the main part which is affected by the energizing current in the magnet coil. The end marked A of the armature is connected by a stiff wire R (also called a link or driving pin) to the center of a round thin mica disk diaphragm, D. The latter is mounted under the receiver cap, occupying a position similar to the metal disk diaphragm in the ordinary telephone receiver.

When a fluctuating current carrying either telegraph or voice signals passes through the winding, the changing magnetic field that is produced sets the soft iron armature into vibratory motion, which is in turn transferred by the driving pin to the mica diaphragm D. The diaphragm, being made of thin mica, is very light and sensitive to the impulses from the armature.

By this method of construction the force generated (by the magnetic lines of force produced by the coil) acts at both ends of the armature and on both sides at each end. The force due to polarization is thus utilized to the fullest extent.

The magnetic circuit has comparatively little reluctance because the air spaces between the armature and pole faces are very thin and a double path for the flux is provided between the U-shaped pole-pieces.

The armature A is under no magnetic strain until a variation of

current flows through the magnet winding, as supplied from the receiving set.

The diagram in *B*, Fig. 231, shows the direction of the lines of force of the permanent magnet through the pole pieces, and it is apparent that the flux does not have to pass lengthwise through the armature, but that it divides equally between both sides of the U-shaped poles, crosses the gap between the pole pieces, and continues through the magnet.

It is due to this division of the flux from the permanent magnet that there is no strain on the armature. This is a condition opposed to that found in the ordinary receiver, where the metal disk diaphragm is attracted toward the permanent magnet and held under a tension at all times, because it forms part of the magnetic circuit.

The short path for the continuation of the flux between the U-shaped poles minimizes magnetic losses and thus favors a strong flux and permanency of magnetization of the main magnet. This insures comparative freedom from troubles experienced when the main magnet becomes weak.

Let us suppose that the permanent magnet is removed from the pole pieces. If the current flows through the winding in a given direction to produce a flux in the soft iron pole pieces, the general direction of this flux can be indicated by the arrows shown at *C* in Fig. 231. The direction of the flux from the coil would be lengthwise with the coil winding and would circulate through the armature and pole pieces as shown by the arrows. Under such conditions, the armature would be equally attracted to the upper and lower pole pieces, remaining unmoved in a mid-position.

Now replace the permanent magnet and pass a direct current through the coil winding from some external source, as from the output of a radio receiver. As shown in *D*, Fig. 231, the current in the coils will produce an electromagnetic field at the same time that lines of force are emanating from the permanent magnet. It is apparent from the arrows indicating the direction of the component magnetic fluxes that in some parts of the magnetic circuit they will flow in the same general direction, and in other parts they will oppose.

In the illustration, it is shown that the fluxes will oppose on the left side of the upper pole piece and from that point circulate through the core of the permanent magnet, as shown by the long arrows. The effect of this will be to attract the armature *A* to the left side of the lower pole piece and to the right side of the upper pole piece as shown in view *E*. Since the diaphragm is connected to the armature, it will be deflected upwards.

When current flows through the coil in the opposite direction, the motion of the armature will be reversed and the diaphragm will be pulled down, being deflected in the opposite direction. The sensitivity of this type receiver is accounted for by the fact that the magnetic circuit is one of low reluctance, as previously stated, because the distance between the opposing pole pieces is made very small, and the soft iron armature is under no strain until current flows through the coil winding. These features of the magnetic circuit increase to a maximum the force due to the varying flux.

Furthermore, it is seen that the armature is attracted or repelled at both ends because it is free to move in a clockwise direction in its bearing point. The magnetic flux produced by the coil flows through each end of a pole piece differentially. This is shown by the opposite direction of the arrows 1 and 2 in the lower pole piece in *D*, Fig. 231, and, similarly, by the arrows 3 and 4 in the upper pole piece. For a given magnetizing current in the coil, the distance of the armature deflection and consequently the diaphragm movement is greatly increased.

How the flux varies in strength may be readily understood by comparing *B* and *C* and *E* in Fig. 231 simultaneously. The flux from magnet *M* flows upward in 3 of illustration *B* and the flux produced by current in the coil flows downward in 3 as indicated in *C*. The opposing forces weaken the resultant flux in 3 as shown in *E*. On the other hand, the magnetic flux circulating in 4 of *B* is in the same direction as the coil flux in 4 of *C*, resulting in a larger total flux as shown in 4 of illustration *E* and also by the attraction of the armature to this pole. The pole marked 1 is strengthened and the pole 2 is weakened for the same reasons.

Loudspeaker.—The cone type loudspeaker illustrated in Fig. 230 is representative of the application of the balanced armature principle. The constructional details clearly show that the magnet winding consists of two individual coils mounted at either end of the armature. These coils are connected in series.

The bearing, or pivot, on which the armature moves is a thin strip with elongated holes at the ends, permitting a slight change in the position of the bearing in order to allow for adjustment and the proper centering of the armature. The armature is positioned between the pole extension with a small air gap, and by reference to Fig. 228 and previous descriptions it is seen that there are four small air gaps which provide the proper clearance so that the armature will not strike the faces of the pole pieces and cause distortion and rattle.

The principle difference in the construction of the loudspeaker in

Fig. 230 from those illustrated in the diagrams pertaining to the previous explanations is that the driving pin is soldered to a thrust lever which acts, as its name implies, as a leverage in imparting any vibratory movements of the armature to the driving rod which in turn actuates the cone-shaped diaphragm. The elongated hole in the end of the thrust lever is for the purpose of slight adjustments to maintain alignment of the pin and rod, thus eliminating any twisting strains.

When a loudspeaker of this type is operated from two power-amplifier tubes connected in parallel, that is, in push-pull arrangement, or from a single-power amplifier tube such as the UX-171, giving a resultant plate current of less than 10 milliamperes, the loudspeaker may be connected directly into the plate circuit, or output of the receiving set. When higher voltages are applied to the amplifier tubes, giving a resultant plate current of more than 10 m.a., it is recommended that the instrument be connected to a coupling system consisting of

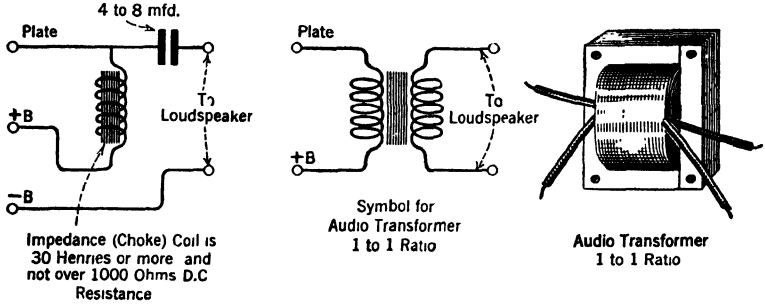

Fig. 232.—Two methods commonly used for coupling a loudspeaker to a power tube.

either an output transformer or a combination of choke coil and condenser, as shown in Fig. 232.

When transformer coupling is utilized, a one to one ratio is suggested from the output of the receiver to the input of the loudspeaker. The choke coil method of coupling is often referred to, and more properly so, as impedance coupling with capacity takeoff. This is because a pulsating direct current flowing through an impedance coil of 30 henrys or more, and not exceeding about 1000 ohms d-c. resistance, will build up a large reactance voltage which charges the condenser connected to it. The discharge of the energy in the condenser causes an alternating current carrying the signal current to flow through the magnet coils of a loudspeaker unit.

This is one of the many ways in which the charge and discharge of a condenser is utilized as a practical means of transferring energy from one circuit to another. When a condenser is being charged, displace-

ment current is said to flow in the dielectric, thus building up an e.m.f. across the plates of the condenser. The e.m.f. furnished by the condenser will cause current to flow in any conducting (metallic) circuit which may be connected to it. This action is fully described under the caption " Displacement Current." It should be reviewed frequently.

The current carrying the signal wave flows through the magnet coils, tending to change the magnetic attraction acting between the pole pieces extending from the main magnet and the armature will be tilted one way or the other, causing vibrations of the diaphragm in accordance with the variations of current. The direct current in the plate circuit of the output or power tube does not flow through the windings of the loudspeaker in either of the two types of coupling shown in Fig. 232.

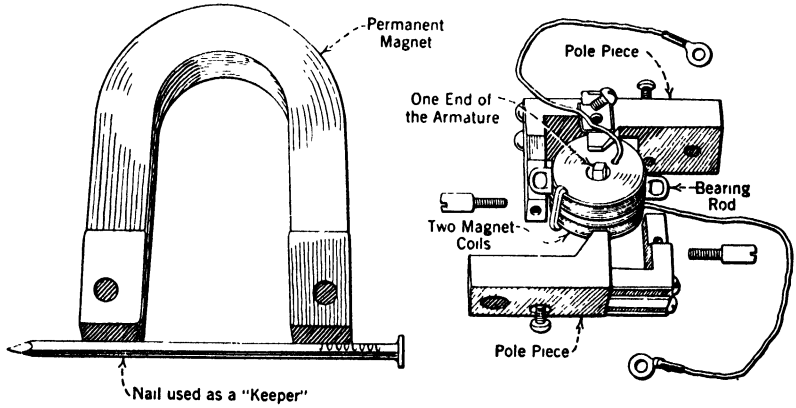

FIG. 233.—A partly exploded view of the motor mechanism of a cone-type loudspeaker.

A large condenser of from 4 to 8 mfd. (microfarads) is most suitable for this work, for it will not act to oppose the transfer of the lower audio-frequency current (the reactance voltage in a condenser increases with any decrease in the frequency of the current charging it, because of the longer time given to build up an e.m.f. across the dielectric). For any decrease in the frequency of the current handled by a condenser its capacity should be increased to keep at a minimum the reactance or opposition voltage.

General and Mechanical Adjustments.—A complete assembly of magnet coils, armature, bearing and pole extension pieces, sometimes called pole shoes, is known as the motor mechanism; a diagram of one partly exploded to illustrate more clearly the relation of the parts is shown in Fig. 233.

When the motor mechanism is disassembled for any reason it is

important to place a *keeper*, such as a nail or any other iron substance, between the poles of the magnet to prevent loss of magnetic energy, so as not to weaken the magnet.

To center the armature for proper clearance between it and the pole pieces, it is advisable to insert four *thickness* gauges to occupy positions in the four air spaces. The gauge may be made of heavy paper, but preferably a piece of copper or brass, for instance, not over 0.010 in. thick. The thickness depends, of course, upon the normal spacing required for the particular unit under adjustment. By bending one thin strip in the middle to form a U-shape, the opposite ends are made to take the place of two separate pieces of material. Hence only two such spacer tools are necessary. One spacer tool is placed in one end of the armature and the other tool in the opposite end, the two filling the four air spaces.

By loosening the screws on the bearing or pivot rod the elongated holes permit the bearing to move and thus release any tension in either direction that may have been in the armature. In this way the armature really adjusts itself, the spacer guages providing the correct clearance or spacing.

With the spacer tools in place, a hot soldering iron is applied to the drive-pin thrust lever connecting point. The solder is heated only sufficiently to allow the drive pin to find its normal position with regard to the thrust lever. After the solder cools, the screws through the elongated holes of the pivot or bearing rod are tightened and the spacer tools then removed.

The armature is thus aligned and balanced so that no abnormal strain is imposed upon it in any direction which would possibly be the cause for distortion or imperfect modulation.

The thrust lever acts as the connecting point between the driving pin and the driving rod, and, if it is loose, noisy reception will result. The set screw holding the thrust lever in position should be loosened only when making an adjustment of the lever action with the driving rod to remove any side strains on the latter.

Filter Circuit.—A special filter circuit designed to improve tone reproduction is often used in conjunction with a loudspeaker. The filter unit may consist of an iron core impedance coil connected in one leg of the loudspeaker circuit in series with the magnet windings, with two condensers, each one shunted respectively between either end of the choke or impedance coil and the opposite leg of this circuit. In a loudspeaker designed to include a filter system, it is imperative that the iron core impedance coil be used and not shorted or cut out of the circuit in the event of damage to this part.

the cone collar cannot strike this iron extension when mechanical vibrations are set up by the small coil. The small coil consists of several layers of fine wire glued to the paper collar, as illustrated, and its terminals are connected to the output transformer of the receiving set operated by the amplifier tube.

Neither end of the paper cone may be considered as absolutely rigid, because the outer edge at the flange is glued to the soft leather, and secured to the metal flange which supports the front of the cone. The collar of the paper cone upon which the small coil is wound is supported by a thin perforated paper diaphragm in certain types, through the middle of which is inserted a round-headed screw threading into the end of the iron core. The screw allows slight adjustments to be made when centering the collar in order to provide equal clearance on all sides between it and the shoulder extension of the iron core. This construction insures free movement at both ends of the paper cone.

The electrical action is explained as follows: According to the laws of electromagnetic induction, if a magnetic field produced by a coil carrying current cuts another magnetic field at right angles, a force is exerted upon the conductors composing the coil, tending to push it at right angles to both the current and the flux of the stronger field in order to accommodate the greater number of lines of force.

The strong magnetic field surrounding the magnet coil does not change or vary in magnitude. However, the current passing through the cone coil does vary, for it is an alternating current carrying the speech or voice frequencies, that is, varying with the modulation of the received signal.

Whenever two magnetic fields lie in the same plane and are under the influence of each other, a variation in the strength of the flux of either will tend to move or displace one of the fields. This is stated in the law given in the previous paragraph. This displacement cannot occur at the large magnet, due to its size and weight, but it can take place at the small cone coil, for the latter is free to move. Hence, a changing magnetic flux encircling the cone coil causes it to move in and out of the plane of the permanent flux of the magnet—of course, within certain limits. Because the cone coil is glued to the collar of the paper diaphragm, it imparts a vibratory motion to the collar which results in sound production.

Large condensers of about 3 and 7 microfarads are connected from either end of the magnet coil and thence to the negative side of the output of the filter circuit. The high impedance of the coil, functioning in conjunction with the filter condensers, will prevent voltage variations at the input of the voltage divider resistors from which the oper-

ating voltages of the receiving set are obtained. In some types of loudspeakers only one filter reactor is required in the filter when the magnet coil is made a part of this system. This is because the magnet coil is such an immensely large one.

Let us observe how a large electromagnet, sometimes called a *pot magnet* or field winding, may perform two distinct functions in the circuit, Fig. 234*a*, namely:

(1) It furnishes the permanent electromagnetic field necessary to operate the loudspeaker.

(2) It is part of the filter system used to smooth out the d-c. pulsations, due to rectification of the alternating current. The electrodynamic loudspeaker may be designed to operate directly from a source of d-c. supply independently of a rectifier and filter circuit such as the one explained in the foregoing paragraphs.

Phonograph Pick-up.—The music or voice impressions on a phonograph record may be reproduced electrically through the amplifier of the radio receiver, instead of through the sound chamber of the phonograph horn, by a device which is installed in place of the usual phonograph reproducer. The needle of the device is fastened rigidly and mechanically to a metal diaphragm, and as the needle traces through the grooves of the phonograph record in intimate contact with the humps and hollows, it imparts a vibratory motion to the diaphragm.

The diaphragm is in the strong magnetic field produced by the pole pieces of the unit. Its movements generate currents of electricity in the small coils mounted on the magnets. The action is often referred to as *magnetic pick-up*, and it might be said that the function of the diaphragm of the unit is exactly opposite to that of an ordinary telephone receiver.

The minute current induced in the magnet coils is generally sent through the primary of the first audio transformer of the amplifying system. The alternating e.m.f. induced in the secondary is introduced to the input circuit of the first audio amplifier tube as a varying potential between its grid and filament and the reproduction of the sound is accomplished by the audio circuits in the usual way.

In the electrical pick-up, either the ordinary iron diaphragm type may be used, as just mentioned, or the armature of the armature type unit can be utilized.

CHAPTER XV

COMMERCIAL LONG AND SHORT WAVE RECEIVERS

Type IP-501 Commercial Receiver.—The Type IP-501 receiver is designed for operation as a regenerative detector circuit to receive the signals sent out by spark stations, and for regenerative beat reception to respond to continuous wave signals.

The vacuum tube detector is mounted on the panel with the tuning

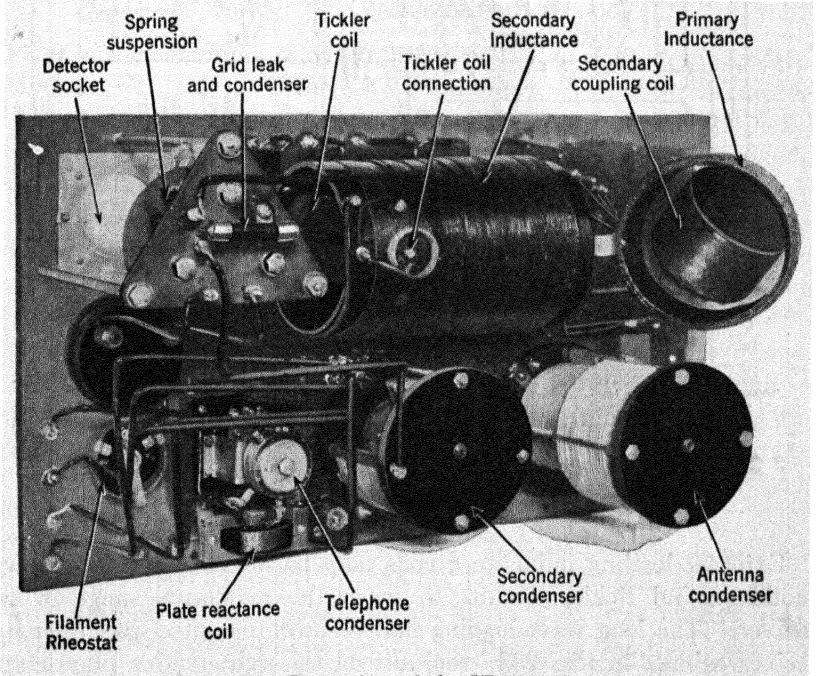

FIG. 235.—Rear view of the IP-501 receiver.

apparatus, a rear view of which appears in Fig. 235. The complete wiring diagram is shown in Fig. 236 and the schematic diagram in Fig. 236*a*. A front view of the panel showing the tuning controls, filament voltmeter and filament rheostat control is shown in Fig. 237.

A crystal detector may be connected to the two binding posts marked "crystal" for the reception of spark signals or modulated continuous waves and the four-pole double-throw switch permits a quick change-over from crystal to vacuum tube operation. When the switch handle is in the center position marked "Send" the receiving circuits are disconnected from the detector. This should be the adjustment when the transmitter apparatus is in operation.

The wavelength range of the receiver is from 300 to 8000 meters.

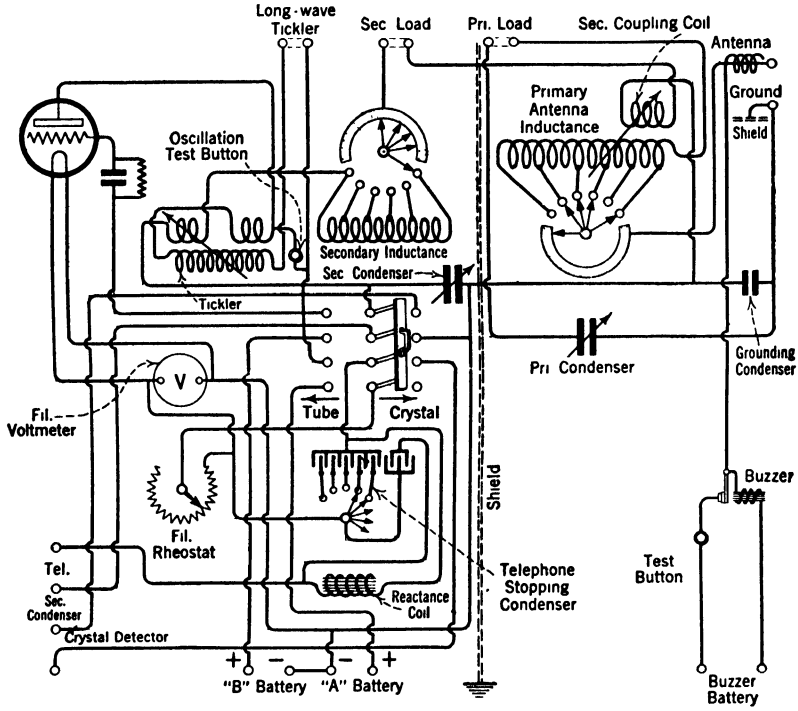

FIG. 236.—Wiring diagram of the IP-501 commercial receiver.

External loading inductance coils may be inserted in the primary, secondary and tickler circuits to reach the maximum range of the receiver. The long wave loading unit is shown mounted over the main receiver cabinet in Fig. 238; the unit on the right in this photograph is a two-stage audio amplifier. The schematic wiring diagram of the long-wave loading unit is shown in Fig. 239. The binding posts on both panels are placed exactly opposite to allow convenient and accurate connection between the circuits. When the loading coils are used, the metal straps attached to the three pairs of binding posts on the receiver panel must be removed. Connection between the lower

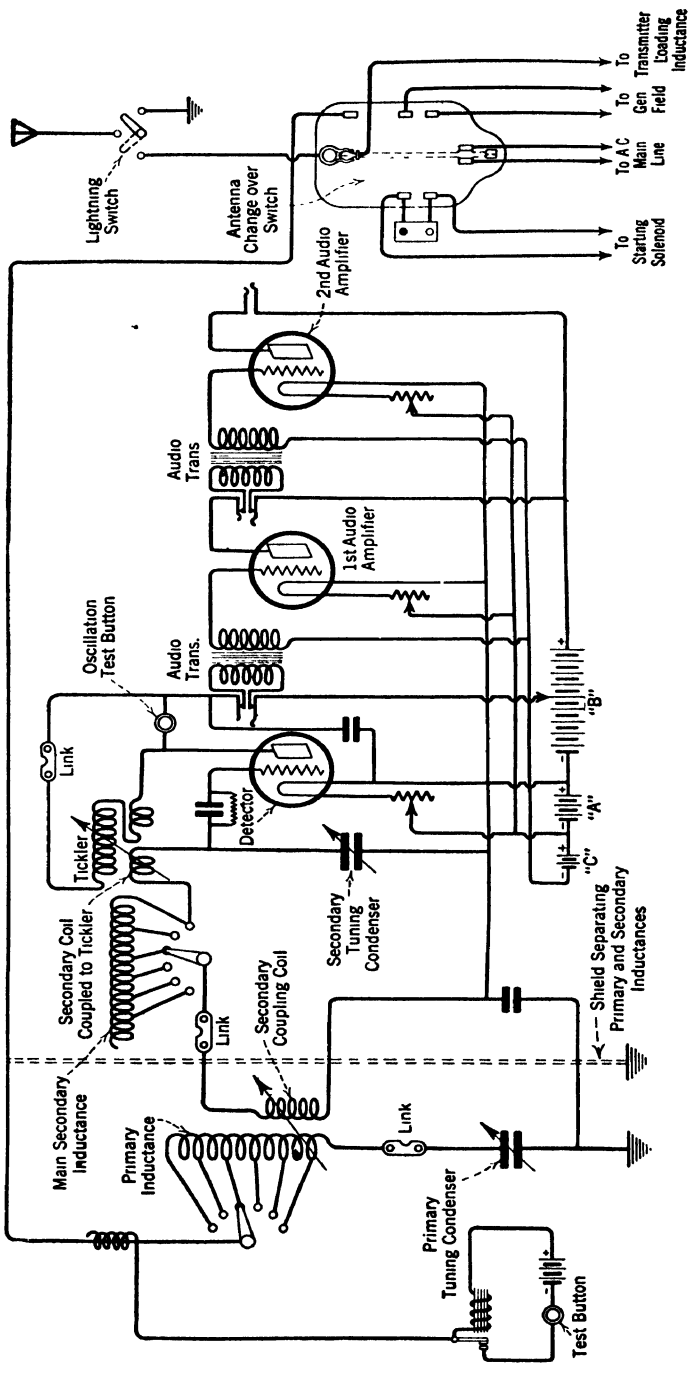

FIG. 236a.—Schematic diagram of the IP-501 commercial receiver with audio-amplifier system and connected to the type "I" antenna changeover switch. The three links are removed when the long-wave loading unit is attached to the receiver.

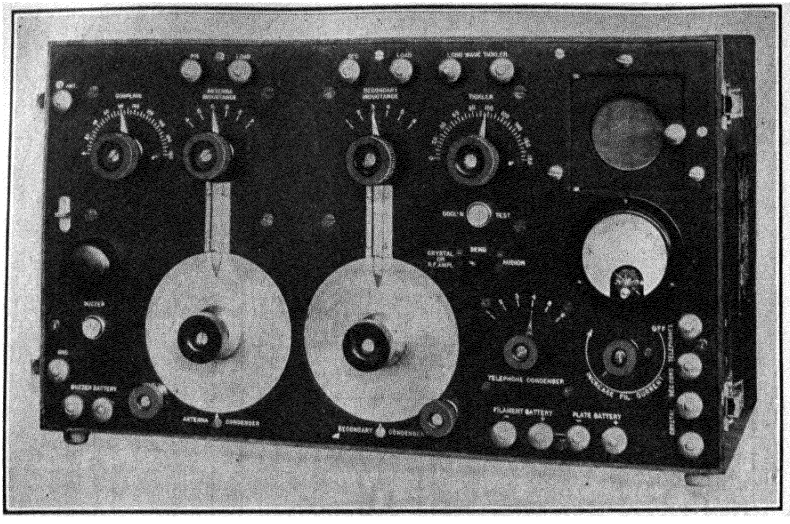

FIG. 237. Commercial long-short wave receiver containing detector. Type 1P-501.

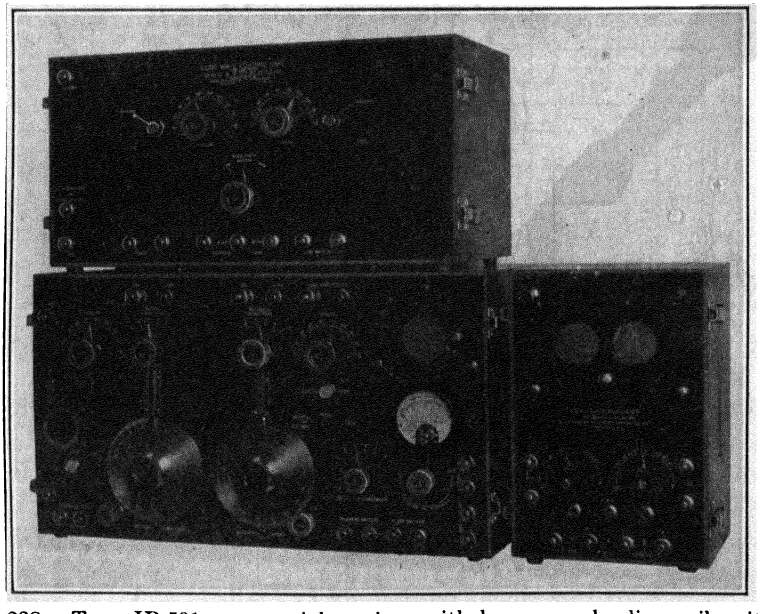

FIG. 238.—Type IP-501 commercial receiver with long-wave loading coil unit and two-step audio amplifier.

antenna post of the loading unit and the antenna post of the receiver is required.

A three-position rotary switch on the loading unit panel connects the circuit to a low, medium and high wavelength range. When the switch is in " Low " position, all of the loading coils are short-circuited and the receiver is then in a condition for the regular adjustments, which are carried out when additional inductance is not used. In " Medium " position the primary and tickler coils are added to the circuit, while only a portion of the secondary loading inductance is cut in. On the " High " position all of the loading coils are added to the respective circuits.

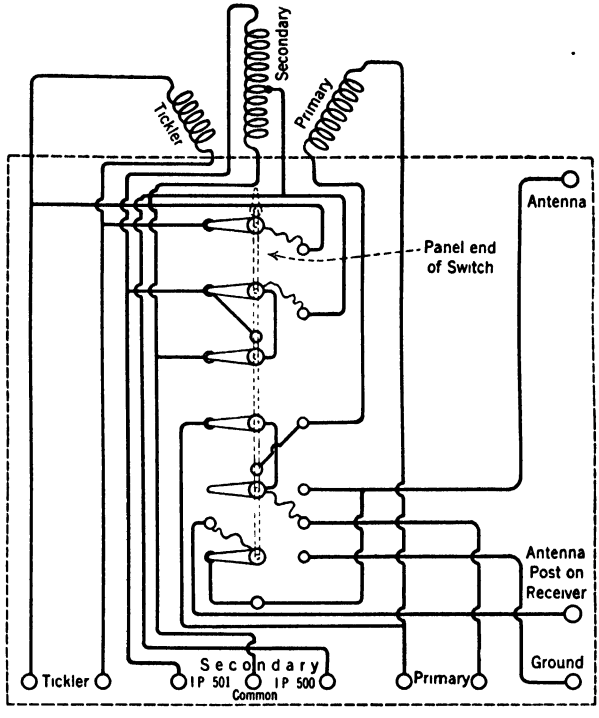

FIG. 239.—Schematic diagram of the loading unit for the IP-500 and IP-501 commercial receivers.

The coupling between the primary and secondary loading coils is variable, with a lock provided to hold the adjustment. The tickler coil coupling is also variable and likewise provided with a lock.

The receiver is of the *inductively coupled type*, having independent primary and secondary circuits which must be tuned with the wavelength of the signals desired.

At the right of the main receiver cabinet in Fig. 238 is shown the two-step audio amplifier unit. Vacuum tubes of the 201-A type are employed in the detector and amplifier circuits. The filaments are energized by a 6-volt storage battery. The receiver and amplifier units are electrically connected by attaching a jumper wire from each " telephone " binding post to each " input " binding post, the corresponding binding posts of the two instruments being exactly opposite. Separate

filament rheostat controls are provided for each tube, and each plate circuit is equipped with a phone jack, to allow for reception of signals directly from the detector, or after the signals have passed through one or two stages of amplification.

The amplifier unit is provided with terminals for connecting the 6-volt " A " battery, the " C " battery to furnish a negative bias to the grid circuits, and the " B " battery to supply the positive plate potentials. The e.m.f. of the " B " battery may range from 90 to 135 volts and the potential of the "C" battery should be between 4.5 and 9 volts, depending upon the amount of "B" voltage used.

The main receiver unit is also provided with battery terminals for the detector tube only. Leads can be connected to the filament posts from the storage battery supplying the amplifier. The " B " battery may be tapped at the 45-volt terminal and a lead carried to the " positive plate battery " binding post.

A small protective spark gap is mounted on the extreme left of the receiver panel directly in the center, and a thin card should be slipped in occasionally between the two angle-shaped posts as a test to make sure that the gap is not short-circuited.

Antenna Circuit—or Primary Circuit.—The antenna or open oscillatory circuit consists of the antenna, the primary cylindrical loading coil, the primary inductance bank wound on threaded tubing, the antenna inductance switch, the variable air type condenser and the ground conductor.

The primary (antenna) inductance is tapped and made variable in six steps with connections to the rotary control switch indicated on the panel from *A* to *F*. This switch is equipped with an arrangement for *dead-ending* the unused portions of the inductance. The end switch automatically connects and opens, or entirely disconnects and short-circuits the sections of inductance when the five switch blades make different contact with the studs.

The primary inductance is mounted at an angle to the main secondary inductance with a heavy sheet-metal shield placed between the coils to neutralize electrostatic coupling effects. This metal shield is grounded. The coupling between the circuits is purely electromagnetic, as provided by a movable coupling coil, which is part of the total inductance of the secondary.

By the switch arrangement for short-circuiting the unused sections of the inductance, interference is minimized. If the unused turns were allowed to remain in the circuit, the self-capacity (distributed capacity) and inductance of these turns would of themselves form an oscillatory circuit, and there would be a loss of high frequency current. At the

same time, the resulting magnetic field would react upon the main inductance to change its self-inductance. This would tend to destroy the resonant setting of the circuit and broaden the tuning.

The primary condenser remains in series with the antenna circuit at all times. It has a capacity of between 0.00008 mfd. and 0.0045 mfd., being also of the self-balanced type with suitable gearing to provide a vernier motion.

When the condenser is rotated between 0° and 180° a very fine variation in capacity is obtainable by means of the vernier control. When the inductance switch is moved, a mechanism attached to it moves a pointer to successive circles which are engraved on the condenser dial, and the wavelength calibrations may then be marked on the dial for future identification.

Secondary or Closed Circuit.—The secondary oscillatory circuit consists of the secondary inductance, bank-wound on a form of threaded tubing. The secondary variable air type condenser is shunted between one end of the inductance and the inductance switch. The secondary loading inductance is used only when the receiver is operated in conjunction with the " long-wave unit." A small coil which is part of the secondary is inserted within the primary tubing in order to provide the necessary coupling between both of these circuits.

The secondary inductance is tapped and made variable in six steps, the sections being added to the circuit in progressive order when the secondary inductance switch is rotated from point 1 to point 6. This switch also is equipped with the automatic arrangement for cutting out and short-circuiting the unused sections of the coil.

The capacitance of the secondary condenser is rated from about 0.00006 mfd. to 0.0032 mfd., and it is also equipped with vernier control. The condenser dial is engraved with rows of concentric circles across which the pointer moves when the inductance switch is rotated, similar to the mechanical arrangement of the primary (antenna) condenser.

Coupling the Primary and Secondary.—The transfer of radio-frequency oscillations from the primary to the secondary is secured by the mutual inductance between a movable coupling coil which is part of the secondary inductance and the low wavelength end of the primary inductance. The photograph of Fig. 235 shows the movable coil, marked "secondary coupling coil," mounted within and toward one end of the primary inductance. The variable magnetic coupling between the two circuits enables the primary and secondary to be adjusted individually to a given wavelength, thus affording sharp tuning to one wavelength.

When the windings of the two coils are parallel, the coupling is

maximum, and it is then that the induced signal oscillations reach their highest current strength, but under these conditions selectivity is reduced. If the coupling coil is rotated to occupy a position where its windings are in a plane at right angles to the primary turns, then the coupling is loosest, or at minimum (zero).

The coupling coil may be rotated a few degrees beyond this point of zero coupling, where the respective windings are at an angle of 90 deg., to what is called a small reverse coupling. By utilizing reverse coupling it is possible in practice to secure a point of minimum coupling between the primary and secondary circuits on all wavelengths within the range of the receiver.

Capacity coupling between the circuits is neutralized by means of the small reverse coupling which has the effect of sharpening the tuning considerably, thereby reducing interference. As previously explained, the capacity coupling between the circuits is entirely eliminated by enclosing the elements forming the primary and secondary in separate heavy sheet-copper boxes. The metal sheets act as a shield in blocking and absorbing static energy and are grounded as indicated by the diagram.

The coupling between the circuits is purely electromagnetic and depends upon the degree of coupling as determined by the angular relationship existing between the movable secondary coupling coil and the primary inductance.

Tickler Coil for Regeneration and Beat Reception.—The tickler coil is connected in series with the detector tube plate circuit and is mounted at the short wavelength end of the secondary inductance. The tickler inductance is wound on a ball-shaped form, sometimes known as a *rotor form*, small enough in diameter to rotate within the tubing on which the secondary turns are wound. The coil is mounted on a shaft controlled by the rotary switch knob on the panel marked " Tickler," with the scale graduated from 0 deg. to 180 deg.

The inductive relation between the tickler and secondary being controllable and being dependent upon the relative position of the two windings allows a close regulation of the amount of energy which feeds back, or is transferred back, from the plate circuit to the grid circuit.

The action of the tickler coil briefly is: When signal oscillations are induced into the secondary circuit from the primary, the grid is charged with an alternating voltage causing the plate current to pulsate at the same frequency. The rise and fall of plate current in the tickler coil induces an alternating e.m.f. in the secondary because of the mutual inductance existing between the two circuits. The mutual inductance

is variable by means of the changing angular positions between the coils when the tickler is rotated.

The signal energy is now reintroduced into the grid circuit. The e.m.f., induced in the secondary, charges the grid with an alternating e.m.f., causing the plate current again to rise and fall, but at a much greater value; for we know that a small grid voltage variation will be repeated in the plate circuit with correspondingly large plate current pulsations. This is due to the inherent amplification characteristics of the vacuum tube.

The functions of the tickler coil may be classified according to the two processes that take place, namely:

First, to provide for amplification of the signal by transferring part of the power in the plate current alternations produced by the incoming oscillations back into the grid circuit. This process is called *regenerative amplification* and the circuit will respond efficiently, when in this condition, to damped waves of the spark transmitter, modulated continuous waves (either tone modulation or a.c.c.w.), and interrupted continuous waves (i.c.w.).

If a regenerative detector is set in self-oscillation when damped oscillations (such as those generated by spark transmitters) are being received, only partial beats are formed by the combining of the two sets of oscillations. Although amplification is secured, complete beat formations, such as produced from continuous wave signals, cannot be obtained because of the damping and discontinuity of the spark wave. The normal note of the spark transmitter is distorted, and a beat note of a rough quality is heard.

Therefore when spark signals are to be received, the coupling should be adjusted carefully to the verge of oscillation, that is, only close enough to reinforce the plate current alternations through the feed-back action, but not sufficiently to set the tube into oscillation. In other words, the circuit should be operated as a regenerative amplifier, and not as a regenerative beat receiver.

Second, if the tickler coupling is increased to a point where the plate energy transferred to the grid is greater than the energy which is lost in the grid circuit, due to its oppositions, such as resistance, etc., then the tube will become retroactive, and generate oscillations of radio-frequency.

If the frequency of these locally generated oscillations is slightly different from the signal frequency, the two frequencies will combine or heterodyne to produce a *beat current*, which will set up vibrations in the telephone diaphragms. This process is known as *regenerative beat reception*, and enables the receiver not only to carry out the

function of regenerative amplification, but permits reception of continuous wave signals.

The explanations and suggestions relating to primary and secondary coupling and proportions of inductance and capacity used to secure selective tuning, which have been discussed in the chapter on " Receiving Circuits," are equally applicable to this circuit.

The buzzer circuit consists of the push-button switch, the buzzer mounted at the left of the panel, an external battery of about three volts connected to the binding posts marked " Buzzer Battery," and a small coil of inductance coupled to the antenna lead, as shown in the diagram, Fig. 236*a*. When the current flowing in the buzzer circuit is interrupted at each make-and-break of the circuit, as by the opening and closing of the contact points, the induced e.m.f. of self-inductance excites the circuit carrying the buzzer inductance, causing the latter coil to radiate groups of damped oscillations sufficiently strong to affect the antenna circuit.

Each impulse causes the antenna or primary circuit to oscillate at its own natural frequency, which of course depends upon the tuning adjustments, and a buzz or note will be heard in the receivers. The buzzer may then be employed to adjust a crystal, if one is used, as in the case of an emergency, or it will serve to indicate when the vacuum tube is oscillating, in which case a low hissing sound will be heard.

The stopping or telephone condenser is a mica condenser, variable in five steps by the rotary control switch mounted on the panel, and its location is shown in Fig. 236. When the correct capacity is found, the groups of damped oscillations from a spark transmitter will discharge through the telephones with a large cumulative effect.

The grid condenser of 0.00025 mfd. capacity and the grid leak resistance shunted across the condenser allow the excess accumulation of electrons stored up on the grid during a group of oscillations to leak off and restore the grid to its normal negative potential. The function of the grid condenser is to place a negative potential bias on the grid to produce a larger audio-frequency average variation of plate current, resulting in a greater deflection of the telephone diaphragms.

The impedance or iron-ore reactance coil shown in the diagram, Fig. 236, is connected in series with the telephone windings and it acts to build up the e.m.f. of self-induction caused by the audio variation of current passing through the telephone circuit, thus giving a stronger signal. However, with very high grade high resistance telephone receivers it is possible to accomplish this result without the reactance coil, but such head-sets possessing the proper impedance are not always available.

A small fixed condenser acting as a *bypass* condenser is shown in the

diagram, Fig. 236, to the right of the variable stopping condenser. Following out the continuity of the circuit it can be seen, when the four-pole double-throw control switch is in the "Crystal" position, that the fixed condenser and stopping condenser are connected in series and shunted across the reactance coil. The function of this small condenser in building up a charge and then discharging during the reception of signal oscillations has been explained under the section "Crystal Detectors."

Let us observe the circuit arrangement when the control switch is moved to the " Tube " position. Both condensers are still connected in shunt with the reactance coil, but from the common point which joins them another connecting lead is carried to the filament circuit. This places the condensers across all of the external impedance in the plate circuit represented by the reactance coil and the magnet windings of the receivers. The function of the condensers is to provide a low reactance path for the high-frequency alternating component of the plate current to flow through and dissipate this energy. By removing this oscillating energy (or high-frequency alternating component) immediately after the incoming signal's oscillations have acted upon the detector tube, it allows only the direct current, carrying the audio-frequency variations, to pass through either the telephone receivers or a two-stage audio amplifier unit, if one is employed.

Unless provision is made for the dissipation of this high-frequency component it will seek the path formed by the distributed capacity of the windings. In this case it becomes a parasitic current, which may be carried along with the audio-frequency current and perhaps mar the perfect reproduction of the original signal wave, or create disturbance in the audio circuits.

Practical Operation of the IP-501 Receiver.—The method of operating the IP-501 receiver if a crystal detector is employed is:

Operation: Crystal Detector for Spark Signals, Modulated C.W. and I.C.W.

(1) When a crystal detector is employed move the control switch on the panel to the left, to the position marked "Crystal." Depress the buzzer test button while exploring the surface of the crystal with the opposing whisker wire to secure maximum sensitivity.

(2) For pick-up work (or stand-by adjustment) set the stopping condenser at its maximum value, at point 6 on the scale. All of the small condensers are then connected in parallel.

(3) Set the coupling switch at about 100 deg. For short wave signals set the secondary inductance at point 2 and for long waves at point 4.

(4) Adjust the antenna inductance progressively from point *A* to *F* and for

every change vary the capacity of both the antenna and secondary condensers by moving the dials slowly across the scale.

(5) After a signal is picked up, loosen the coupling by moving the pointer toward zero and readjust the tuning of the secondary circuit and primary circuit, then reduce the capacity of the stopping condenser to a minimum value. First one change and then another should be made in a deliberate and *thoughtful* manner until the signal comes in with good audibility.

(6) When using the crystal detector set the tickler-coil coupling at zero to lessen the possibility of this coil extracting any of the high-frequency signal energy from the secondary inductance.

Operation: When Vacuum Tube is Employed as a Non-regenerative Detector for Reception of Spark, Modulated C.W. and I.C.W.

(1) When the vacuum tube detector is employed move the control switch to the right, to "Tube" (sometimes marked "Audion").

(2) The rheostat should be in the "Off" position before operation (1) is performed. Now increase the filament current by moving the control handle in the direction marked "Increase" until the filament voltmeter indicator is on 5 volts.

(3) For short wave work set the secondary inductance pointer at division 2, and for long waves at division 4. For the reception of spark signals the "Tickler" should be set at about 120 deg. In any event, the tube should not be oscillating, but in a condition for regenerative amplification when receiving "Spark," "Modulated C. W." or "I.C.W." signals.

(4) To pick up a signal, increase the coupling and adjust the "Antenna Inductance" in steps. For every change slowly swing the "Antenna Condenser" entirely across the scale. After the signal is heard, loosen the coupling, and tune the secondary circuit to resonance with the primary by means of the "Secondary Inductance" and "Secondary Condenser," following the procedure given under "Crystal Operation."

(5) Adjust the telephone condenser until maximum signal is heard, bearing in mind that the highest selectivity on spark signals is secured by using a minimum amount of capacity in this condenser.

(6) Note that for "Stand-by" adjustment, or pick-up work, the coupling between primary and secondary should be close, but for selectivity the coupling should be reduced to a point consistent with satisfactory reception.

Operation: When Vacuum Tube is Employed as a Regenerative Detector for the Reception of Continuous Waves (C.W.)

(1) Throw the control switch to "Tube" and increase the filament current until the voltmeter reads 5.0 volts.

(2) Adjust the Tickler coupling control to about 45 deg. and set the stopping or telephone condenser at point 3 or 4, cutting in about half its capacity

(3) The tube should now generate oscillations, which can be easily determined when a clicking sound is heard in the receivers while applying the following tests:

(*a*) When the push-button marked "Oscl'n Test" is depressed, the tickler coil is shorted and consequently no inductive feed-back action will take place. Hence, every time the button is pressed the oscillations will cease, being manifested by the phone click.
(*b*) When the antenna circuit is brought into resonance with the secondary by tuning with a medium amount of inductance coupling between the circuits.
(*c*) When the tickler coupling is tightened (periodic clicks).
(*d*) If the tube is oscillating and the test buzzer is operated, a soft hissing sound will be heard.

(4) Set the coupling control, marked "Coupling," at about 80 deg.
(5) Adjust the "Antenna Inductance" and vary the "Antenna Condenser" until the antenna system is in resonance with the desired signal wave, following the general procedure for tuning in spark signals. However, in c.w. reception the signal is often tuned in and out with a small variation in capacity and therefore the condenser should be rotated very slowly. For every change in the capacity of the primary or antenna condenser, the secondary condenser should be slowly rotated back and forth. Each time the point is reached, when the secondary is tuned to resonance with the primary, it will be marked by a slight click heard in the phones. Continue varying the primary capacity slowly and for every change swing the secondary condenser back and forth past the resonant point until the characteristic c.w. note of the station is tuned in. The pitch of the note can be altered to suit the individual ear, but in practice it is found that the best note (one that is not too highly pitched) is heard at a setting slightly above or below the resonant point.
(6) Loosen the tickler coupling as much as possible to secure selective reception of c.w. signals and also use the loosest (minimum) inductive coupling between the primary and secondary.
(7) Failure to obtain oscillations may be due to insufficient tickler coupling or the polarity of the "B" battery connection may be reversed or the "A" battery may have dropped below normal..

Amplification Control (Tickler Coil).—The *tickler coil* is so designed that the regeneration is under complete control throughout the tuning range. That is, regeneration may or may not be used at any particular frequency. There is a point just before oscillation occurs that gives the greatest amplification and should be used especially on distant reception. The point varies according to the frequency of the incoming signal, but the general rule of a greater setting of the amplification dial with a decrease of frequency will be true.

No Regeneration.—If oscillations cannot be obtained, or stop at lower frequencies, trouble may be due to any of these causes:

(1) Filament voltage low.
(2) " B " battery voltage on detector low.
(3) The detector tube has low emission, or is otherwise subnormal.
(4) Shorted turns in " Tickler " coil.
(5) " Tickler " coil leads reversed.
(6) Open by-pass condenser.

TYPE IP-501-A RECEIVER

Placing the IP-501-A Receiver in Operation.—This receiver was designed for the reception of radio telegraphic signals over the wavelength band of 250 to 8000 meters (1200 to 37.5 kc.). This band may be extended to include 18,000 meters (16.7 kc.) by the addition of a type IP-503 Loading Unit. The circuit diagram is shown in Fig. 239*a*, and a front view of the receiver in Fig. 239*b*.

The receiver comprises an inductively-coupled tuner, a vacuum tube detector and two-stage audio amplifier. Except for the compact grouping of these components in one cabinet, this set differs only slightly from the well-known IP-501 receiver.

Tuning to a Known Wavelength.—Assuming that the wavelength of the desired station is known: Throw the transfer switch to the "Tube" position. Place the telephone plug in the desired jack and adjust the filament voltage to 5 volts by means of the rheostat.

(1) Set Secondary Tuning Condenser at this wavelength.
(2) Coupling pointer at maximum, 180 deg.
(3) Advance Tickler control until detector just oscillates.
(4) Place Primary Inductance switch on same point as Secondary Inductance switch. Rotate Primary Condenser until a "double click" is heard in the telephones which indicates that the antenna circuit is in tune with the secondary circuit. The "double click" is explained in a later paragraph.
(5) If autodyne reception is not desired, stop the detector from oscillating by reducing the tickler setting.
(6) Slowly move both primary and secondary condensers back and forth for the loudest signals.

If sharper tuning is desired, decrease the coupling to a range of 60 to 90 deg. and retune both the primary and secondary condensers.

Proper Adjustment of Coupling.—Radio operators know that loose coupling gives greater selectivity and sharper tuning. Many of them

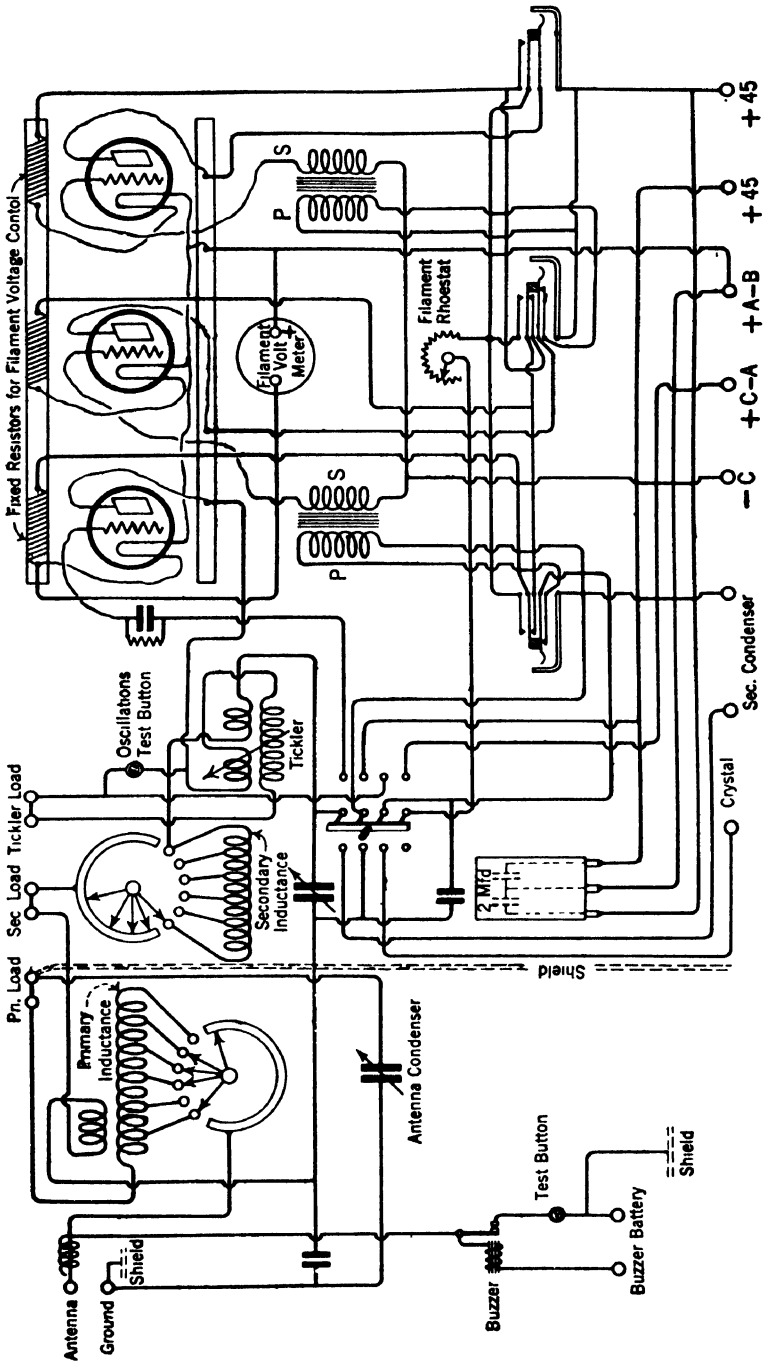

FIG. 239*d*.—Wiring diagram of the type IP-501-A commercial radio receiver.

believe loose coupling also means reduction in signal strength. This is not necessarily true. For every wavelength within the range of the receiver there is a degree of coupling which will give the most satisfactory results from the combined viewpoint of signal strength and sharpness of tuning. This is called *Critical Coupling.* Figure 307 illustrates how selectivity and received signal vary for different degrees of coupling These curves were taken with the tickler at zero and with both

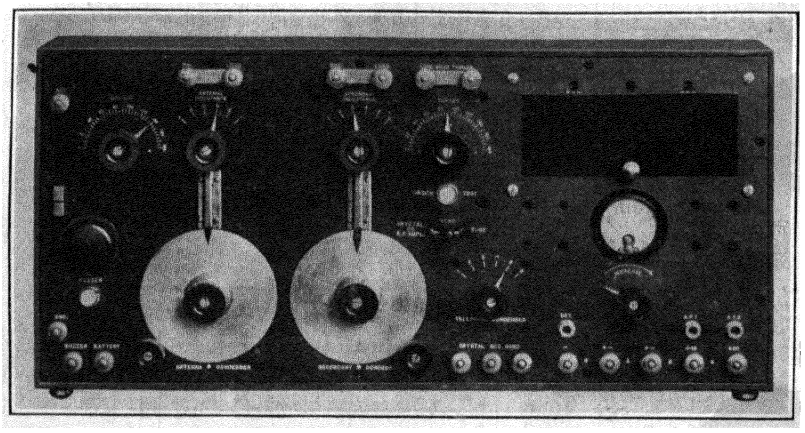

FIG. 239*b*.—Commercial long-short wave receiver, type IP-501-A, containing detector and audio-amplifier system.

primary and secondary circuits tuned to 800 meters, then coupled as marked on each curve. The conclusions drawn from Fig. 307 are:

(1) The looser the coupling, the sharper the resonance curve (the greater the selectivity), but looser than critical coupling considerably reduces the signal strength.
(2) Close coupling makes the receiver resonant to two wavelengths at the same time; one below and one above the desired wavelength.

Critical coupling occurs at that adjustment at which the primary circuit produces no reaction on the secondary. This fact fortunately makes it easy for the operator to test the receiver adjustment to ascertain if the coupling is approximately at this desired critical value.

To Test for Critical Coupling.—Assume that the secondary condenser is set at the desired wavelength. Advance the tickler slightly beyond the oscillating point. Rotate the primary condenser slowly back and forth, noting the "double click" in the telephones as the primary passes through resonance with the secondary circuit. As the coupling

is loosened these " double clicks " will merge into one faint click. At this setting the receiver is adjusted for critical coupling. Observe that the value of critical coupling changes with wavelength.

The " double click " is familiar to operators of oscillating receivers. This sound in the telephones results from the sudden change of plate current when the detector stops and starts oscillating, due to the primary wavelength being varied from that at which the oscillating secondary is set. The greater the distance on the primary condenser dial between these " clicks," the closer the coupling between the circuits.

Before we obtain this " double click " indication, we must have: (*a*) the antenna connected so that the primary circuit is complete and can be resonated to the secondary; (*b*) the tickler so set that the detector oscillations are neither too strong nor too weak; and (*c*) the coupling adjusted to be at least greater than critical.

TYPE 106-D COMMERCIAL RECEIVER

The Type 106-D receiver is of the inductively coupled type, having independent primary and secondary circuits, both of which must be tuned to resonance with the wave-length of the desired signal. The fundamental diagram of the receiver is shown in Fig. 240. The front panel view showing the tuning controls is illustrated in Fig. 241. The rear view photograph, in Fig. 242, and the sketch, Fig. 242*a*, of the tuning elements shows the mechanical arrangement of the various pieces of apparatus.

The vacuum tube detector and two-step audio amplifier unit is mounted in a separate cabinet, connections being made from the main receiver panel to the vacuum tube circuits by the four leads indicated on the fundamental diagram with letters F, G, T_1 and T_2.

Antenna or Primary Circuit.—The primary circuit consists of the antenna, an inductance made variable by two multi-point switches, a variable air type condenser (which may be automatically connected in and disconnected from the circuit), the secondary coil of the buzzer transformer and the ground conductor.

Inserting the primary condenser in the antenna system shortens the wavelength of the antenna to a value less than its fundamental wavelength.

The winding of the primary inductance is tapped at each of the first ten turns with the leads connecting to the " Units " switch. The remainder of the coil is tapped in steps of ten turns and leads are carried to the " Tens " switch. The main primary inductance is included

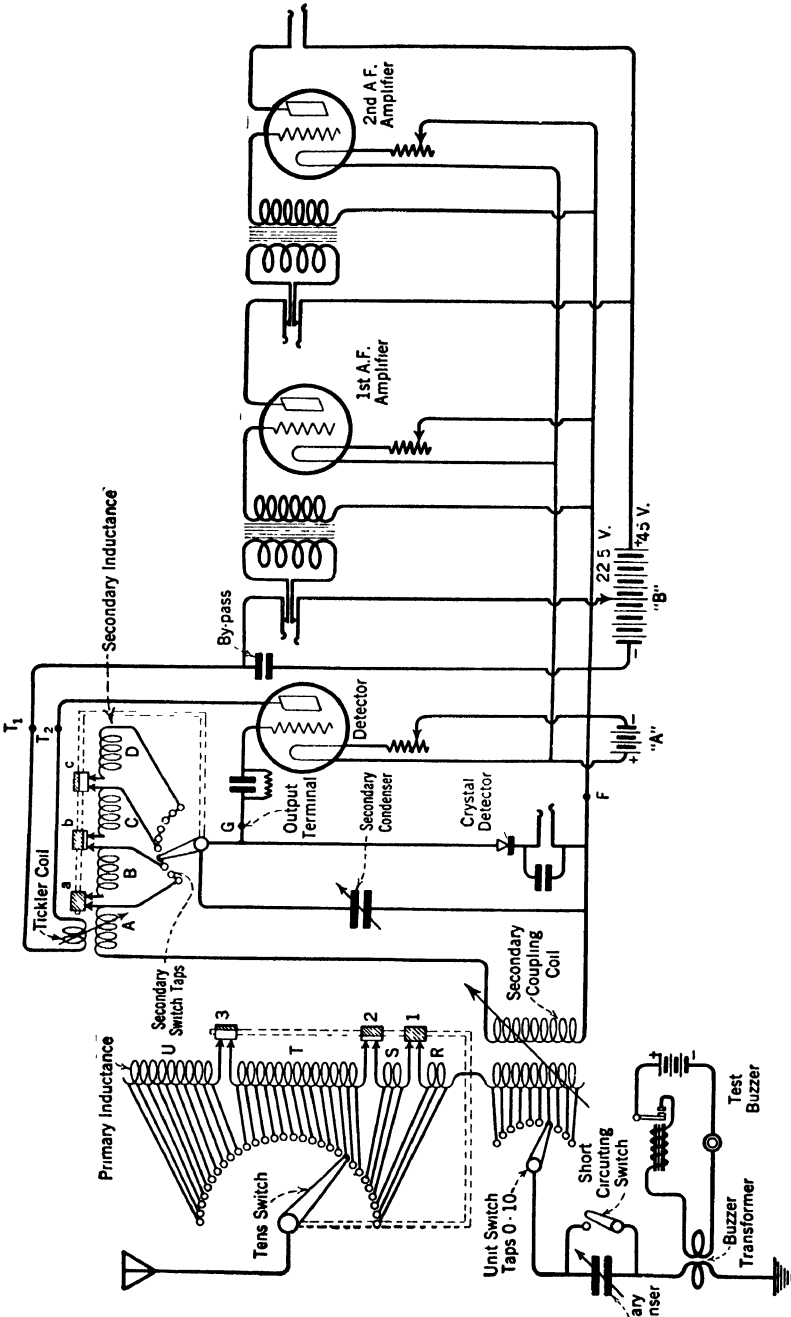

FIG. 240.—Fundamental diagram of type 106-D commercial receiver with detector and two-stage amplifier.

between contact studs O and 190 indicated by the " Tens " switch. When this switch blade is placed on studs marked from 190 to 290 a

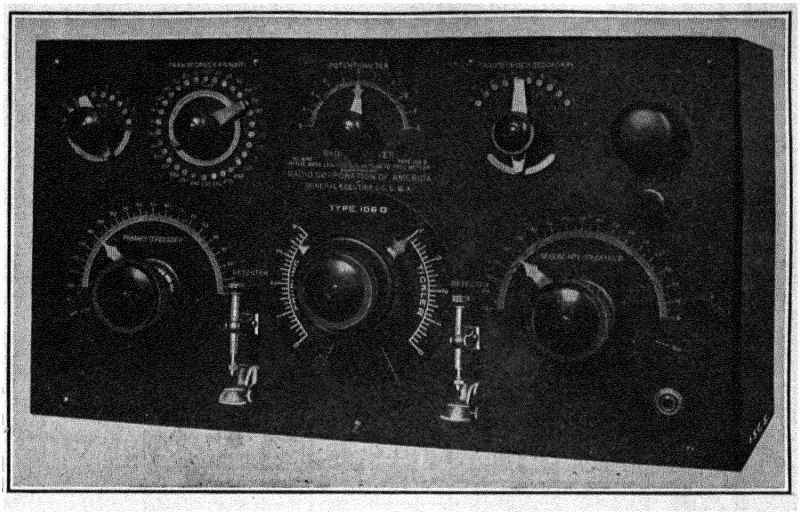

FIG. 241.—Type 106-D commercial receiver.

separate loading coil is inserted in the circuit. This coil is shown mounted on the bottom board in the rear view panel photograph.

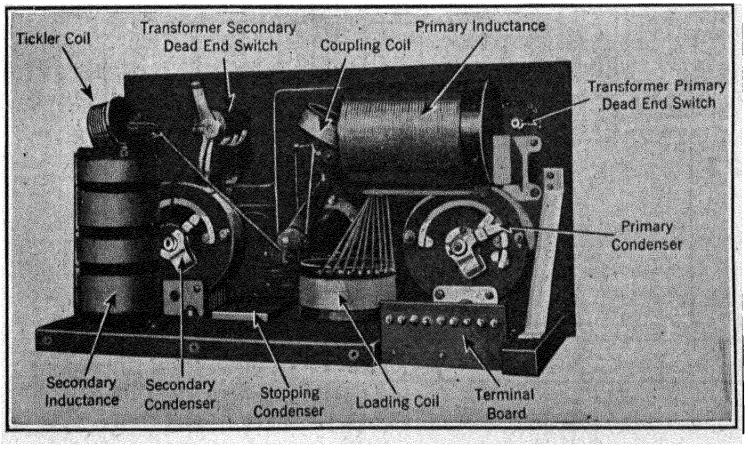

FIG. 242.—Rear interior view of the type 106-D commercial receiver.

By manipulating both the " Units " and " Tens " switches of the transformer primary any number of turns may be used on the entire

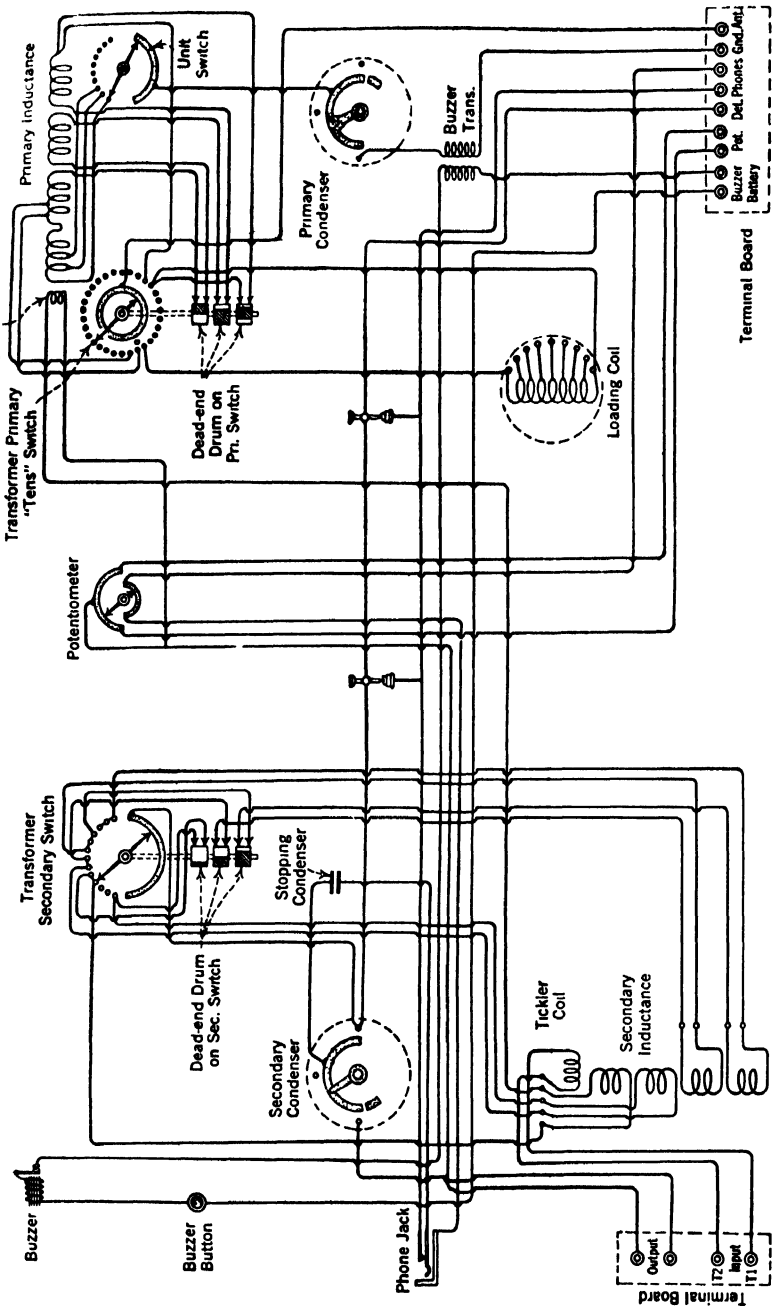

FIG. 242*a*.—Schematic wiring diagram of the type 106-D commercial receiver. The vacuum tube detector and amplifier unit are connected at the terminal board in the lower left of the diagram.

inductance, as well as the loading coil. The " Tens " switch is equipped with three copper segments or drums which rotate with the shaft. These drums act to disconnect and open entirely the individual sections of the inductance which are unused. A switch of this type is called an " end-turn " or " dead-end drum " switch. Its use aids in minimizing losses of radio-frequency current which occur when the unused portions of the inductance remain in the circuit, and it also tends to lessen interference. Sharper tuning results, because the self-inductance of the used portions is only slightly altered by the presence of the unused sections of the coil.

The end-turn switch breaks the winding into groups for different ranges of frequencies. Such a switch, however, does not wholly eliminate all the losses incurred, due to the presence of the unused turns. The undesirable effects of the unused turns can be overcome only by removing them completely from the magnetic field set up around the used turns. This is an impractical consideration in a commercial short- and long-wave receiver.

The copper segments (drums) are staggered on the shaft, as shown in Fig. 242*a*, in such a way that when the "Tens" switch is on stud 30, (Fig. 240) the three segments 1, 2, and 3 are disconnected from the primary inductance sections *S*, *T*, and *U*, and consequently at this time only section *R* and the "Units" section remain in the antenna circuit. When the " Tens " switch is on stud 60, segment 1 is then in a position to connect section *R* with *S*, but segments 2 and 3 will be in a position to disconnect sections *T* and *U*.

Now let us again refer to the schematic diagram, Fig. 240. With the " Tens " switch on 190, sections *R*, *S* and *T* are connected in the circuit while the loading coil, section *U*, is disconnected. With the switch on stud 290, segments 1, 2 and 3 are making contact with the respective ends of every section and the entire inductance is then cut in, that is, added to the circuit.

The primary condenser is connected in series with the antenna circuit and provides a fine variation of tuning. It is often used on the longer waves, even at a sacrifice in signal strength, in order to increase the selectivity of the receiver. To disconnect the primary condenser from the circuit, the dial should be rotated to the position marked " Out " on the front of the panel.

Secondary Circuit.—The secondary circuit consists of the secondary inductance mounted on the base board of the receiver in a position at right angles to the primary inductance, and the secondary tuning condenser, which is shunted across the used portions of the secondary coil and the detector.

The secondary is wound in four separate sections or groups, as the photograph clearly shows, and these sections are connected together only when increasing the wavelength by the segments of the " dead-end " switch, which is mounted on the shaft of the " transformer secondary " switch.

Coupling.—The mutual inductance between the primary and secondary is effected by a 30-turn movable coupling coil which forms part of the secondary inductance. The coupling coil is mounted at the short wavelength end of the primary inductance, the movement of the coil being controlled by the smaller of the two coupling knobs on the panel. The inductive relationship of the primary and secondary is dependent upon the angular relationship between the two inductances. To secure minimum coupling the coupling coil is turned at right angles to the primary indicated by " 0 " on the dial scale. The position the coupling coil occupies in the photograph is one very near to that of minimum coupling.

To secure maximum coupling the coil is rotated to occupy a position within the cylindrical tubing upon which the primary is wound. The electromagnetic induction between the two circuits will be maximum when the center axes of the two coils lie in the same plane.

At the position of maximum or close coupling it can be seen that the winding on the coupling coil will be parallel to and closest to the primary winding, indicated by " 4 " on the dial scale.

The secondary inductance is not tapped between the sections *A*, *B*, *C*, and *D*. Each section is added to the circuit in progressive order by the segments *a*, *b*, and *c* of the " dead-end " drum switch when the switch arm of the transformer secondary is placed on contact studs 1, 3 and 5 respectively, indicated on the panel. Although there are ten studs to permit smooth rotation of the lever arm, only the three marked studs actually cut in the four sections of the inductance. Studs 1 and 2 are shorted together, acting in effect as one stud, as are 3 and 4; also 5, 6 and 7, and similarly 8, 9 and 10. With this arrangement the wavelength value is not changed when moving the secondary switch arm from one stud to another stud, if the studs are connected by a short-circuiting jumper. The extra studs are used as terminal lugs, making convenient connection of leads running from the ends of the secondary coil sections to the brushes resting on the segments of the mechanical " dead-end " switch.

The three segments on the secondary switch used to disconnect the unused sections of the secondary inductance are shown in the rear view photograph of the receiver, Fig. 242. In the photograph the primary " dead-end " switch is obscured by the primary inductance.

The secondary tuning condenser remains in the circuit at all times and permits a close and continuous variation of the frequency of the secondary.

Tickler Coil for Regeneration and Beat Reception.—The tickler system shown in Fig. 242*a* consists of a movable coil mounted at the top of the secondary inductance, close to the first section *A*, which is the short wavelength end of the coil. The sketch shows that this section always forms part of the secondary inductance, being connected to the first contact on the transformer secondary switch.

The tickler coil is connected in series with the plate circuit of the vacuum tube detector, through binding posts T_1 and T_2, on the terminal board of the receiver, as shown in the wiring diagram, Fig. 242*a*. The inductive relationship between the tickler coil and secondary is controlled by the larger of the two coupling knobs on the front of the panel. The *feed-back* of energy from the plate circuit to the grid circuit is maximum when the tickler is parallel and closest to the secondary, indicated by " 4 " on the dial scale.

On the other hand, loosest coupling between the circuits is secured when the tickler coil is rotated to occupy a position where its windings are at right angles to the secondary winding, indicated by " 0 " on the dial scale. The tickler coil is shown in the position of minimum coupling in the photograph, Fig. 242.

Buzzer Circuit.—The buzzer circuit is especially useful for testing the adjustment of a crystal detector, if one is used, as it might be in an emergency. It will be noted that the circuit provides for the connection of a crystal and is equipped with a stopping (telephone) condenser and phone jack.

The buzzer circuit may also be used to indicate when the vacuum tube is oscillating, in which case a low hissing sound will be heard in the receivers. If the tuning buzzer is set into operation by depressing the push-button, the buzzer circuit is rapidly opened and closed by the make-and-break at the contact points of the armature. The magnetic field expanding and contracting about the buzzer coil of the buzzer transformer will induce oscillations into the antenna circuit, at the natural frequency of the antenna. The secondary may then be tuned to resonance with the primary to receive the buzzer signal. On account of the energy which is liberated each time the magnetic field around the magnet coils of the buzzer itself is changed, it is rather difficult to obtain a clear note when using the vacuum tube detector.

Vacuum Tube Circuits.—The vacuum tube apparatus is mounted inside a separate case and when connections are made with the main receiver, as shown in Fig. 240, care should be exercised to obtain the

correct tickler coil relation with the secondary. The tickler leads T_1 and T_2 should be reversed and tests made if there is any failure to obtain oscillations when the tickler is set at maximum coupling.

Each tube is provided with a current-control filament rheostat, and each plate circuit is equipped with a phone jack to permit weak signals to be amplified through one or two stages of audio amplification. If the signals have good audibility, however, they may be read directly in the output of the detector. When the telephone plug is inserted in either one of the double-circuit jacks, the outer two leaves will spread, breaking contact with the two inside leaves, thus disconnecting the primary of the audio transformer from the plate circuit. The telephone receivers are then inserted in the plate circuit because the tip and shank of the plug make connection respectively with the outer leaves of the jack.

Operation of the Receiver.—If the crystal detector is to be used, the phones should be plugged in the jack, at the front lower right side of the receiver panel, provided for that purpose. The crystal should be adjusted to maximum sensitivity by means of the test buzzer. The filament switch for each vacuum-tube circuit is to be in the "Off" position. When a crystal which does not require a battery is used, the potentiometer must be set at zero. However, when a battery operated crystal is used, such as carborundum, the potentiometer pointer is moved either to one side or to the other past zero position until loudest signals are heard, either from a distant sending station, or from the test buzzer circuit. The critical point in the characteristic curve of the detector is reached when the potential applied to the crystal will cause the largest change in the current flowing through the telephone magnet coils for a given intensity of the incoming signal oscillations.

The sensitive spot of the crystal is found by exploring its surface with the fine whisker wire.

If the vacuum tube detector is to be used, the crystal detector circuit must be open, the phone plug removed from the jack in the receiver panel and inserted in the detector jack in the vacuum tube panel. The detector filament rheostat is now turned to the right, cutting out resistance gradually, until the filament is lighted to normal brilliancy. The vacuum tubes employing the thoriated filament are operated at a lower temperature than the oxide coated filament type and it is difficult sometimes to determine if the specified normal voltage has been applied to the filament terminals when a voltmeter is not available. In order not to subject the filament wire to an excess current flow, it is suggested that the rheostat be adjusted until a hissing sound is heard, after which

the current should be reduced by increasing the rheostat resistance until the hissing disappears and a clarified sound is heard in the telephones.

Reception of Spark Signals. Regenerative Amplification.—To receive spark signals (damped oscillations) or any modulated continuous oscillations such as modulated continuous wave of telegraphy or telephony, the tube circuit should not be in an oscillating condition. Hence, the tickler coil coupling is gradually increased, after the signals from a spark transmitter are picked up to increase amplification by the phonomenon of regeneration, but this amplification of the signal unfortunately can be carried up only to the region just below the point at which critical coupling between the plate and grid circuits will cause the tube to break into oscillation. The tube circuit then will generate continuous oscillations and the spark signals will be slightly distorted into mushy sounds.

The receiver is in a " stand-by " adjustment to pick up the signals from a distant transmitter when the primary and secondary are closely coupled, affording broad tuning, indicated when the coupling pointer is set at " 4 " on the dial scale. The primary condenser is then set at " Out " and the amount of inductance in the primary and secondary is found by adjusting the multi-point switches.

In adjusting the receiver circuits to resonance with the signal frequency it should be borne in mind that the primary and secondary may have exactly the same fundamental frequency, although using different proportions of inductance and capacity.

The loudest signals are obtained ordinarily when the secondary circuit is formed with a minimum amount of capacity and a correspondingly larger amount of inductance. It is possible at times to secure greater selectivity, and avoid interfering signals. This can be done by working with the loosest coupling practicable between primary and secondary and then using small amounts of secondary inductance while tuning the circuit to resonance by means of the secondary condenser until an easily readable signal is brought in.

It should always be remembered that selectivity and maximum signal strength are factors of prime importance.

In practice, it is found that selectivity may be further increased by utilizing the primary condenser. The capacity of this condenser is placed in series with the distributed capacity of the antenna system, and consequently the total capacity used for a given wavelength must be compensated for by using a larger amount of primary inductance. The intensity of the signal will be lowered somewhat, as will be experienced whenever the natural frequency of an antenna circuit is

artificially altered by means of capacity inserted in series with the circuit.

The receiver has a range of wavelengths from 200 to 3500 meters.

The lowest wavelength range is obtainable when the primary condenser is used and the primary " tens " switch is set at zero, while the primary " units " switch is placed on stud 10, and at the same time is using the lower points of secondary inductance. The primary condenser is slowly rotated until the signal is heard. If at 180 deg. the signal is still weak it may be necessary to add primary inductance in steps of " ten turns " as indicated by the " tens " switch. A good rule to follow with each change in the primary inductance is to swing the secondary condenser slowly back and forth once across the scale, for we must at some time pass the point of resonance where the circuit will respond to the signals.

The primary and secondary must be in absolute resonance to receive the loudest signal, and since the strength of the signals is the only indication we have that the receiver is in tune with the incoming signal wave, it is imperative to understand fully the effects of close and loose coupling and the proportions of capacity and inductance used in the two oscillatory tuned circuits.

Reception of Continuous Waves (C.W.). Regenerative Beat Reception.—To receive continuous wave (C.W.) signals from either an arc transmitter, or vacuum tube transmitter, the tickler coupling is adjusted to the point where the " feed-back " energy from the plate circuit to the grid circuit is sufficient to maintain oscillations. The coupling, however, should not be any closer than is consistent with a good audible signal. Upon reaching this point of oscillation the usual indication is a pronounced click in the telephone receivers.

The antenna circuit is adjusted to resonance with the wave-length of the signals we wish to receive by the methods already explained for picking up spark signals.

The process of continuous wave reception is based upon the heterodyning or combining of two sets of r.f. oscillations having slightly different frequencies, thereby providing the necessary *beat current* to which the telephone diaphragms will respond.

The frequency of the incoming oscillations is governed by the inductance and capacity of the distant transmitting antenna, and the maximum signal oscillations are induced in the receiving antenna when its circuits are in tune with the transmitter. In the case of continuous wave reception we know that the secondary, which is generating continuous oscillations at a frequency determined by its L C values (being

its inductance and capacity values), must be tuned slightly out of resonance with the primary to produce the *beat note.*

As the secondary condenser is slowly rotated, it will be found, in practice, that a slight click will be heard when the resonant point is reached, that is, when the frequency of the locally generated oscillations coincide with the frequency of the signal oscillations.

Having accomplished this, we should now rotate the condenser dial to a setting slightly below or above the resonant point, until the clearest note is received. The pitch of the note is varied for each change in capacity, and the note best suited to the individual ear should be selected. Furthermore, interference may be minimized by changing the note or by loosening the coupling by means of the secondary coupling coil after we have picked up the desired station.

For any change in coupling between two oscillatory circuits, the mutual inductance is altered and the magnetic fields react upon the respective inductance coils in such a manner as to cause a variation in the self-inductance of each circuit. This, of course, throws the circuits slightly out of resonance and the signals are weakened. It is a simple matter to retune the set by adjusting first one circuit, then the other, until all circuits are again in resonance, which is manifest when the signals are at their loudest.

The *failure to obtain oscillations* may be due to reversed tickler coil connections, or insufficient tickler coupling to maintain the tube in a state of continuous oscillation. After reaching the critical point where a tube just slides into oscillation we should tighten the coupling, that is, increase the coupling, with an adjustment of a few degrees beyond this point to promote a stable condition.

To test for oscillations, the tickler coil coupling is varied from minimum to maximum several times and it should be accompanied by periodic clicks in the head phones. Also, the secondary switch may be tapped with the finger, preferably moistened, when the added *body capacity* will destroy the resonance of the circuit.

If the tube is oscillating, a click will be heard each time the finger makes contact with, or is removed from the switch blade.

It is advisable always to check up on the polarity of the " B " battery connections which supply the positive plate potentials for the vacuum tubes, and also to test the voltage. A partially run-down " A " battery may not supply sufficient voltage to the tube for obtaining oscillations.

It is necessary in any receiver equipped with switch blades and contact studs to make an occasional inspection for perfect contact and a good firm pressure between them. A weak pressure can be remedied

by removing the screw in the center of the knob, pulling the knob off the shaft, and removing the screws which hold the switch blades in place. The blades may be bent to secure the proper tension and replaced. Undue tension should not be brought to bear between the blade and studs because a groove will be rapidly cut in the studs, causing unnecessary wear.

CHAPTER XVI

RECTIFIER DEVICES—RECTIFIER CIRCUITS—VOLTAGE DIVIDER RESISTORS—FILTER CIRCUITS

Theory and Practice.—The rectifier unit supplied with a receiving set is designed to furnish direct current obtained from rectified alternating current for plate excitation of the receiving tubes and also the requisite grid bias voltages. The rectifier unit operates from an alternating current supply of 105 to 125 volts and 50 to 75 cycles. In certain sections of the country where the frequency of the alternating current supply is less than 45 cycles, for instance 25 cycles, it is necessary that the transformer windings be of different design. A 60-cycle rectifier unit should never be connected in a 25-cycle supply, and vice versa.



FIG. 243*a*. — Type UV-876 current regulator tube.

By the addition of a suitable amount of resistance in the voltage divider resistors, the apparatus may be used also to provide filament current for the smaller type receiving tube of the 199 variety, providing the filaments are arranged in series drive as found in certain types of receivers.

The rectifier apparatus and circuit diagram shown in Fig. 243 is employed only for plate and grid excitation, and consists of three essential parts.

(1) **The Alternating Current Power Transformer.** —One type is shown in Fig. 244. With the proper relation of primary and secondary turns, any desired voltage may be obtained to operate a given circuit. The primary winding connects directly to the a-c. lighting circuit through the "Off-On" switch. As an additional feature, a current regulator tube as shown in the photograph, Fig. 243*a*, may be connected in series with the primary of the power transformer. This tube will tend to compensate for any slight variations in the line current, because its filament resistance rises and falls rapidly with any increase or decrease of current flowing through it. The secondary of the transformer con-

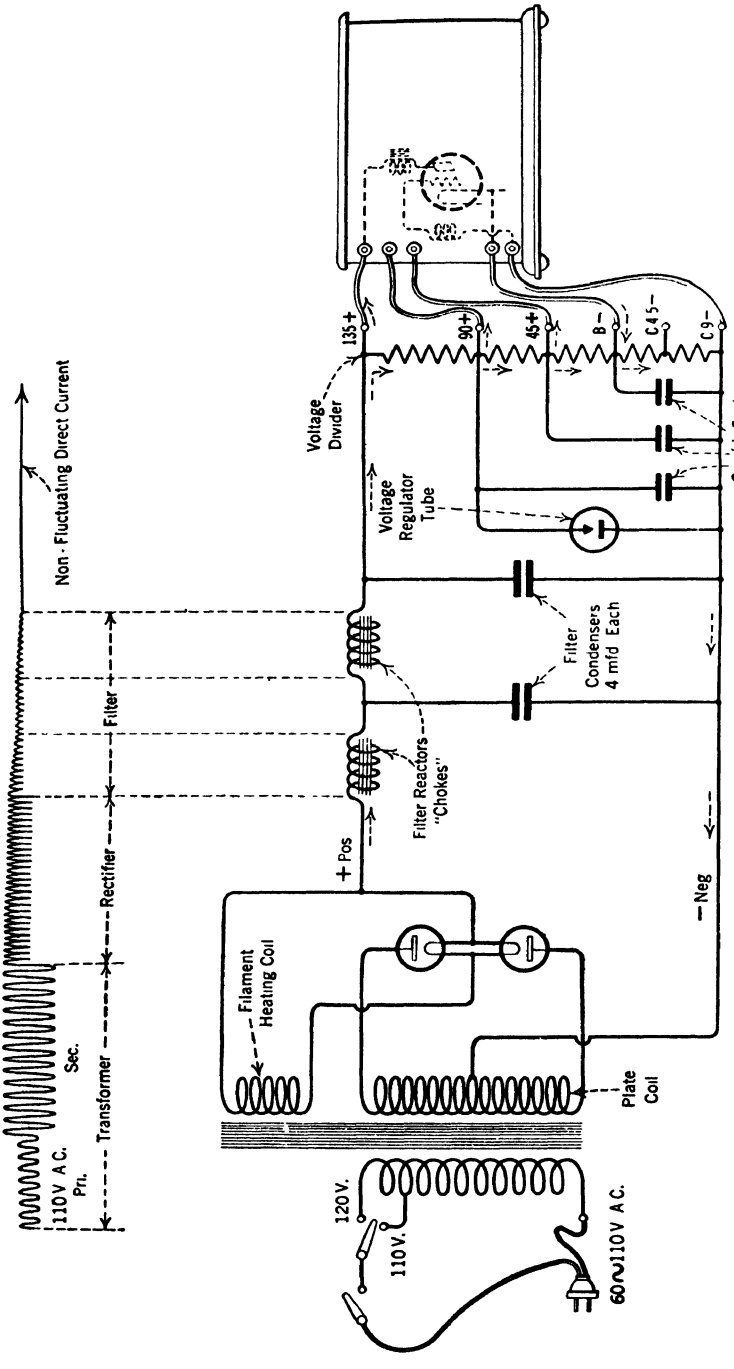

FIG. 243.—Illustrating the essential parts of a full-wave rectifier unit, namely, the power transformer, two half-wave rectifier tubes of the filament (thermionic) type, filter system and voltage divider. The principles are explained by the curves.

nects to a full-wave rectifier utilizing two half-wave rectifier tubes as shown in Fig. 243. Full-wave rectification is obtained because each plate is connected to either end of the high voltage side (secondary) and each plate upon which a positive potential is applied at any particular time will be active in passing current (direct current) through the tube, and thence to the voltage-divider units which are connected as illustrated. Each tube is alternately active during successive cycles of the alternating current, thus utilizing the energy in the full wave or complete cycle. The rectifier tube converts the alternating current into pulsating current, which is smoothed out by the filter system to non-fluctuating (steady) direct current.

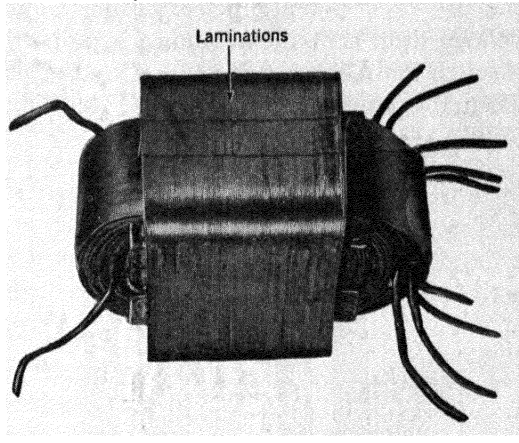

FIG. 244.—A-C. power transformer used with a rectifying device for supplying "A," "B," and "C" voltages to electrically operated receivers.

(2) **The Filter System.**—Each pulsation or alternation of direct current flowing from the output of the full-wave rectifier is as widely fluctuating in magnitude as the energy in the a-c. alternation, as shown by the curves in Fig. 243. The direct current in this form is unsuited for plate excitation because the variations in current strength will be repeated as a purring or humming sound in the loudspeaker. The function of the filter system is to smooth out these pulsations and to deliver a substantially uni-directional steady direct current to the voltage-divider resistors. A filter system may be arranged to consist of one or two filter reactors or choke coils, and one or more condensers of suitable capacitance and dielectric strength. The action of the choke coils and condensers combined is to prevent any increase or decrease of the direct current passing to the voltage dividers. This action is explained fully in a subsequent paragraph.

A voltage regulator tube also may be used in conjunction with the voltage divider section of a power unit to maintain at all times a constant voltage on the plates of the receiving tubes. The voltage regulator tube is shown connected between positive 90 volts and negative *B*.

(3) **The Voltage Divider.**—The direct current from the output of the filter system flows through the voltage-divider resistors, one type of

which is shown in Fig. 245. One unit of this voltage divider is shown in Fig. 245*a*. By making suitable taps at points along the resistance (see Fig. 243), any desired voltages may be obtained for plate excitation below the maximum of the rectifier, to voltages as low as three or more volts for grid biasing.

The principles involved in obtaining the working voltages for the receiving tubes are similar to those already explained in connection with the use of a potentiometer. From Ohm's Law we know that the voltage drop across a resistance is proportional to the current passing through the resistance multiplied by the size of the resistance in ohms. Then, by applying this rule and knowing the current values in the

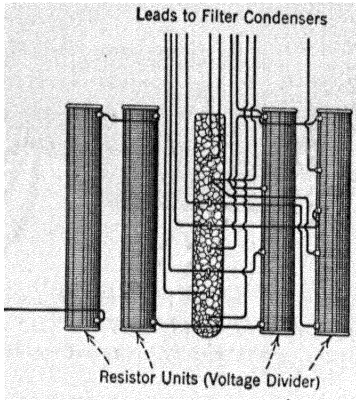

FIG. 245.

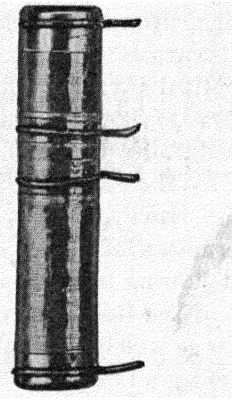

FIG. 245*a*.

FIG. 245.—One method of tapping resistor units to obtain d-c. voltages for the plates of receiving tubes.

FIG. 245*a*.—Voltage divider resistor.

various circuits, any one can ascertain the exact values of resistance necessary to obtain the desired voltages at the various taps.

In case of the breakdown of the rectifier unit, the possible location of the trouble may be quickly determined by the following simple tests.

First: With the circuit in its usual operating condition place a screwdriver against each choke coil in the unit in succession. This is done in order to test the magnetic pull. If more than one choke or reactor is used and the same pulling force is exerted on the screwdriver by each, it is apparent that the direct current flowing through each reactor is uniform in strength. Also, there may be a magnetic pull on one reactor and not on the other, indicating whether current is passing through both reactors. The trouble may be isolated in this way. Do not permit the screwdriver to touch other parts or wiring in the circuit.

It is advisable always to ascertain first that the tube or tubes are perfect and the circuit from the a-c. lighting supply is properly connected.

Second: By unsoldering each filter condenser in successive order and noting the results and resoldering, a punctured condenser may usually be located. The circuit will function when the damaged condenser is cut out. The circuit, however, should not be placed in service without replacing the damaged condenser with one of correct capacity and voltage rating and known to be perfect by previous test.

Third: If the trouble is thought to rest in the resistor elements, these may be unsoldered from the wiring and a test applied to the resistors, either across the whole resistor bank, or across individual units, according to the explanation under the caption " Checking Values of Different Units," in a previous chapter (see Fig. 219).

Rectifier Devices.—It is quite evident that an eliminator or rectifier unit consists of a rectifying element, a filter system and a voltage-divider resistor bank from which the d-c. voltages are supplied to the receiving set. We shall now discuss individually four types of rectifiers. They are, namely:

(1) Hot cathode type (thermionic or filament type).
(2) Gaseous type (filamentless type).
(3) Electrolytic type, which does not employ a tube.
(4) Dry metal rectifier which does not employ a tube.

(1) **Hot Cathode Rectifier.**—This type depends for its rectification properties upon the utilization of a heated body which will emit negative electrons. When a filament is lighted to incandescence, electrons are emitted in great quantities. When a second positively charged body (the plate) is placed within the electron field, the electrons will move toward the plate under the attraction of its positive electric force and thus the conduction of current is brought about.

For all practical purposes current will flow from the positive body, called the anode or plate, to the negative body or heated body, called the cathode. However, if the potential at the plate is reversed and made negative, the electron stream will be repelled. Without an electronic movement toward the plate conduction current will not flow. This briefly outlines the rectifying properties or one-way conduction of the two-element hot cathode type vacuum tube.

A uni-directional current will flow in the voltage divider circuit when properly connected to the rectifier tube. If a tube having two plates and two filaments is employed and each plate is connected to opposite terminals of a transformer secondary winding, full-wave rectification may be obtained. At a time when one plate is charged positive, the

other plate is charged negative, as the alternating e.m.f. reverses potential every half-cycle. Therefore, two plates utilized in this manner and working alternately will supply a current flowing through the output circuit in only one direction, or direct current.

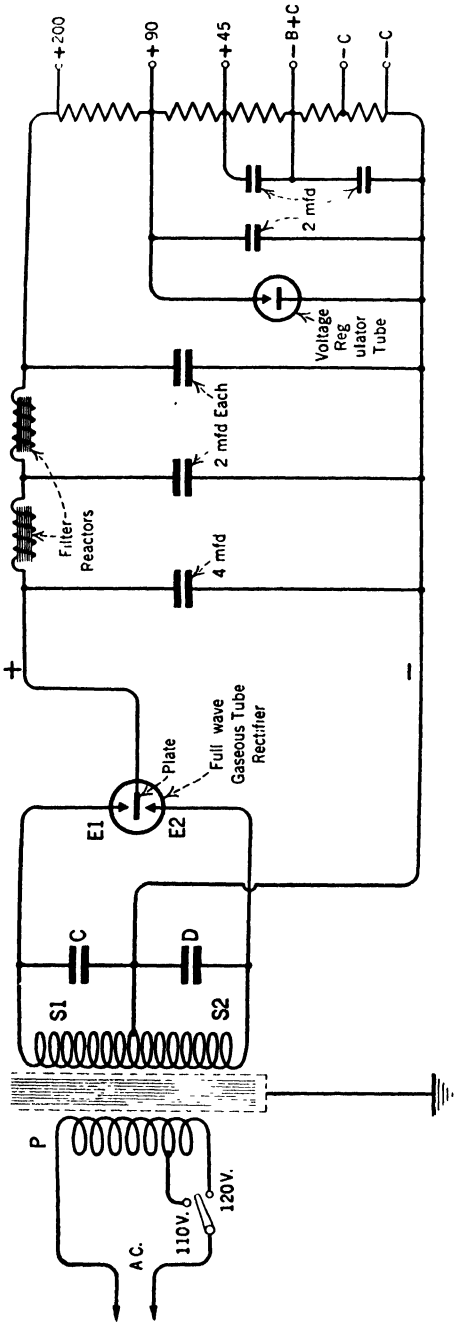

FIG. 246.—A circuit of a "B" and "C" eliminator utilizing a full-wave gaseous tube rectifier with buffer condensers marked *C* and *D*. The manner in which a voltage regulator tube is employed is clearly indicated.

(2) **Gaseous Tube Rectifier (Filamentless Type).**—A full wave gaseous tube rectifier is shown connected in a standard circuit in Fig. 246. The output of the tube is connected to the filter system as illustrated. The difference between a full wave gas tube rectifier and the filament type, that is, the hot cathode type, is that the latter construction requires an individual filament heating coil wound on the power transformer.

If two electrodes are separated a predetermined distance in ordinary air and a high enough voltage is impressed across the electrodes, a spark discharge will occur between the points. This is due to the fact that the air molecules in the intervening space between the charged electrodes are

agitated. Air, as we have learned, consists of many available electrons, usually termed *free electrons*, which may be forced to move from one electrode to the other, always seeking to equalize the high and low potentials existing on the respective electrodes. In their movement from one electrode to the other, or from negative to positive, free electrons crash into any gas atoms that may lie in their path, and, due to this collision, the gas atoms are broken up and one or more electrons are liberated from each gas atom. The electrons which have been knocked off, as it were, augment the original electron stream moving from one electrode to the other, thus producing a spark discharge. It requires a very high voltage at the electrodes in order to produce this action in ordinary air. This is called *ionization* of the air and the air becomes a good conductor after its resistance has been broken down in this way.

Now, depending upon the medium in the space between any two electrically charged electrodes, whether it is air, or a particular kind of gas, the characteristics of this discharge are subject to change.

Ionization Principle.—The gaseous tube rectifier operates under what is known as an *ionization principle.* A normal gas, such as helium, under certain conditions is a non-conductor and under other conditions it will become an almost perfect conductor. It was stated in the "Electron Theory" section that a normal gas atom shows, on the whole, no charge of electricity because the atom is composed of equal values of positive and negative electricity. The negative quantity is composed of the electrified particles called the electrons. Ionization consists of liberating one or more electrons from each gas atom, and, since there are countless billions of atoms in a small quantity of gas, there will be released large quantities of negative electrons which will seek and move toward an electrode (anode) upon which rests a positive electric charge. The atoms, after being ionized, are positively charged and they will seek a negative electrode (cathode). The movement of electrons represents and is a flow of electrical current.

In all gaseous atmospheres there are a certain number of electrons (perhaps one or two in each atom) which may be easily forced away from a normal atom when a difference of electric potential exists upon two electrodes spaced at a predetermined distance. There is considerable activity among the atoms caused by the electric potential on the electrodes. This agitation of gas atoms causes them to collide with one another and one or two electrons of each atom are knocked off as previously mentioned. These electrons, upon being freed, rush toward, or really are attracted toward, the positive electrode. These electrons are often referred to as *loose* or *free* electrons, although they are not

actually free until they have been released, due to the above action. While the electrons in limited numbers are en route to the positive electrode, they collide with gas atoms that lie in their path with such force or impact that additional electrons are released, thus ionizing the gas. The gas atoms, being deficient in negative electrons, become positively charged atoms.

The positive atoms, which may be simply called *ions*, are attracted toward the negative electrode because these ions are deficient in a certain number of electrons and seek to acquire an equal number of electrons (at the negative electrode) to restore them to their original normal state. These atoms will again be ionized (i.e., re-ionized) by collision with their neighboring atoms and electrons again will be released, flowing toward the positive electrode. The positive ions will rush toward and crowd around the negative electrode searching for and taking on electrons from the negative electrode in amounts necessary to restore them to their normal state. It can now be seen that the positively charged atoms, or ions, build up around the negative electrode, and, by the process of ionizing and re-ionizing atoms, the electrons move from cathode to anode. The ionization of the gas and flow of electrons has made the path between the electrodes electrically conductive. Although current flow and electron flow are coincident, nevertheless in practical usage of the term of current flow, it would be said that current will flow through the tube from anode to cathode and in the external circuit from cathode to anode. As previously explained, current flow is merely a term and its direction only a relative one with regard to the electronic flow. This will be evident by following the mechanics of what happens within a gas medium between two separated electrically charged electrodes.

Gases.—Other gases, such as neon and mercury vapor, could be used instead of helium for the rectification of high voltages. But the latter gas possesses certain advantages over the others when employed as the conducting medium in tubes of ordinary power, such as those being used in " B " eliminators. The helium gas is put through several purifying processes before a certain amount (which determines the gas pressure) is finally introduced in the tube and the metal elements and wires are treated in a furnace for a certain period of time to remove the last trace of gases in those elements that might tend to prevent normal action of the tube after it is placed in service. Any cleanup or exhaustion of the helium gas content (called *gas fatigue*) will shorten the life of the tube. This may occur, after many hours of operation, through natural causes, such as a dilution of the helium by impurities given off from the metal elements due to heat or by air leakage, that

is, air entrance into the tube through the glass stem through which the wires are drawn to connect with the prongs on the base. There is, no doubt, a certain coefficient of the expansion between the wire and the glass, and the stems are made quite long to minimize the air leakage. Due to the terrific bombardment of electrons on the small surface of the anodes these elements are specially treated to remove all impurities and prevent rapid deterioration.

Tungar Type Rectifier.—The ionization of gas molecules by the force possessed by electrons in their flight toward a positive electric attraction will put the gas into a state in which it will have the properties of an electrical conductor. This action is known as ionization, or disruption of gas atoms by impact, as previously stated. Furthermore, when a filament wire is heated to incandescence, electrons will emerge from or will be emitted by the hot wire. The atoms of the filament material have been ionized, the process being known as *thermal* or *thermionic*, due to heat. The Tungar rectifier tube consists of a heated filament and a relatively cold plate which is charged alternately positive and negative by connecting it to the secondary of a transformer, with argon gas injected into the glass chamber. Here we have two processes of ionization, namely heat and impact, employed in the same tube in order to obtain the necessary electrons to make a conductive path between the filament (cathode) and plate (anode). Electrons flow to the plate during every half-cycle when the plate receives a charge on the positive alternation from the power transformer.

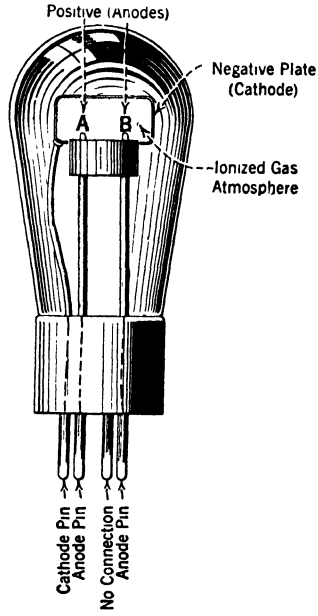

FIG. 247.—A sketch of a gaseous tube rectifier to show generally the mechanical relation between the large cathode and the two smaller anodes.

Gaseous Tube (Filamentless Type). Full Wave Rectification.—Figure 247 shows one electrode with a large surface, called the cathode, while the two smaller electrodes *A* and *B* are shown protruding through an insulating block of lava into the space in which a rarefied gas is contained under a low pressure. The cathode is connected to one prong on the base of the tube. Anodes *A* and *B* are connected respectively to two other prongs. The fourth prong on the base makes no electrical connection and is blank.

When two anodes are used, full wave rectification may be obtained. The smaller anodes *A* and *B* are connected to opposite terminals of the secondary winding of the step-up transformer as shown in Fig. 246, and consequently they will be at opposite polarities to each other at any instant. During one alternation, electrode *A*, for example, is positive and passes current while electrode *B* at that time is negative and opposes current flow. Each electrode is active in passing current at every other alternation of an a-c. cycle; hence, for a 60-cycle supply a total of 120 alternations of current will flow, always in the same direction, through the voltage divider resistors of the eliminator. Of course, the 120 alternations or pulsations of direct current will be smoothed out by the filter system composed of choke coils and condensers to provide a substantially steady, non-fluctuating direct current suitable for energizing the plates of the vacuum tube.

A gas tube with two anodes is similar in its full wave rectifying properties to a hot cathode type tube, employing two plates and two filaments. In either case, if only one anode and one cathode is used, we have half wave rectification, but if two anodes are used we have full wave rectification.

Rectification Principle Explained in Detail. Filamentless Gas Rectifier Tube Utilizing a Large and a Small Electrode.—Suppose two electrodes, spaced a predetermined distance, are placed in a glass envelope and the pressure within lowered by exhausting the air from the tube. When voltage is applied to the electrodes, conduction current cannot flow. This is accountable because a (commercial) vacuum is almost free from gases and *does not* contain very many *loose* or *free* electrons which can be set into motion.

If, however, the chamber contains a slight trace of gas, for example, neon or helium, with all conditions similar to those mentioned above, a flow of conduction current will take place from one electrode to the other. This is manifested by a peculiar purplish glow.

When two large electrodes are of equal size the electrons released from ionized atoms by the collision of free electrons will allow conduction current to flow with equal facility in either direction, the direction of flow depending upon the polarity of the electrodes. However, if electrons could be liberated in larger quantities from one electrode and allowed to move freely toward the other electrode, the electrodes then would possess the property of rectification. A larger flow of current would pass one way through the tube and a lesser value, or none at all, in the opposite direction.

We have shown how the gas is put into a state to make it readily conductive; the following explanation deals with the construction of

the electrodes by means of which rectification is obtained. Many years ago Sir Oliver Lodge developed a gaseous rectifier utilizing ordinary air and two electrodes, one being a large cathode and the other a very small anode for obtaining one way conduction. Figure 248 shows how one electrode is made very much smaller than the other. Electrode A has a minute surface area, and electrode C a large area. When A receives a positive charge and C a negative charge, electrons will move from the larger surface C toward the smaller surface A, due to the positive attraction at the latter point.

Now, when an alternating e.m.f. is applied to the electrodes, the polarity changes at each electrode twice every cycle. At no time is there any difficulty in great masses of electrons attaching themselves on the large electrode C because of the infinitely small magnitude of an electron. When the gas is ionized and electrons move toward A, as

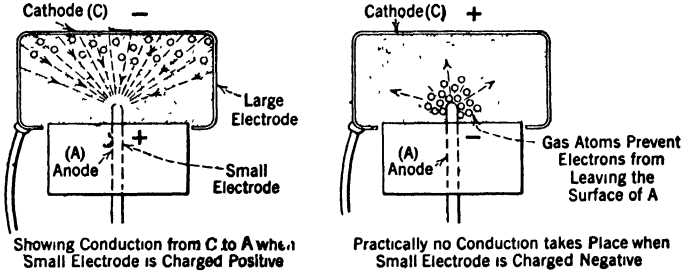

FIG. 248.—A diagrammatical explanation of the one-way conduction principle in a gaseous rectifier tube.

shown by the arrows, the positive atoms move toward electrode C, seeking to pick up a few electrons in order to restore their balance. The foregoing action may be better understood by studying the left-hand view in Fig. 248.

Now refer to the right-hand view. When the polarity reverses, and electrons attempt to leave the region of the smaller electrode and move toward the larger one, they will meet with an obstacle in the form of the positive atoms which in the meantime have collected around the smaller electrode surface A because A is negatively charged. Due to the larger size of the positive gas atoms as compared to electrons, the atoms literally cover the small surface area, forming a sort of shroud, or barrier, through which electrons cannot pass in any appreciable quantity. This action does not permit the positive atoms to reach the small surface A in sufficient numbers to take on the requisite amount of electrons in order to re-establish their normal or balanced state. Hence, the electrons leaving the small body are greatly reduced. Such

a condition could not prevail on the larger surface C because there is sufficient area to prevent a large concentration of gas atoms at one point. Large quantities of the positive atoms gather around the large electrode as they seek to take on the same number of electrons by which they became deficient through their ionization in the first place.

The rectifying action, then, depends chiefly upon the difference in size of the two electrodes. If equal in size, current would flow as readily in one direction as the other. The action may be summed up in a few words by saying that when one electrode is large in comparison to the other the positive atoms will find their way readily to the large surface C and take on electrons when this electrode is negatively charged by the alternating voltage from the transformer to which the electrodes are connected. However, with the reversal of voltage, the smaller surface A becomes negative and its ability to furnish electrons to the positive atoms is greatly lessened because the positive atoms cannot gather in large quantities around the small surface.

The Raytheon gas rectifier tube, with specifications, is listed in the Appendix.

(3) **Electrolytic Rectifier.**—In Fig. 249 a step-up transformer is shown connected to eight rectifier jars and the jars in turn connected to a *smoothing out* circuit or filter system and the latter to the voltage divider resistor units.

Two banks of four jars each are connected respectively to opposite terminals of the secondary winding, as shown. A mid-tap taken from the secondary coil forms the negative side of the circuit. The magnitude of the alternating voltage induced in S_1 and in S_2 will depend principally upon the ratio of turns in S_1 and S_2 to the primary winding.

Let us assume that the number of turns of wire wound on the two secondary coils is sufficient to provide an e.m.f. of 150 volts across each winding. The output voltage of the rectifier will then be approximately 150 volts as marked on the diagram.

Each jar consists of an aluminum plate A and a lead plate L, immersed in an electrolytic solution. Certain materials have the property of one-way conductivity; that is, the current in one direction is met by a normal resistance of the jar (the jar may be called a cell), but, in the other direction, the resistance may be 50 or 100 times as great. When a cell of this kind is connected in an a-c. line it substantially cuts off one-half of the wave and permits the other half to go through; that is, a pulsating uni-directional current will flow from the output of a rectifier cell.

It can be seen that one cell will rectify alternating current into direct current. When it is desired to supply the d-c. circuit with a larger

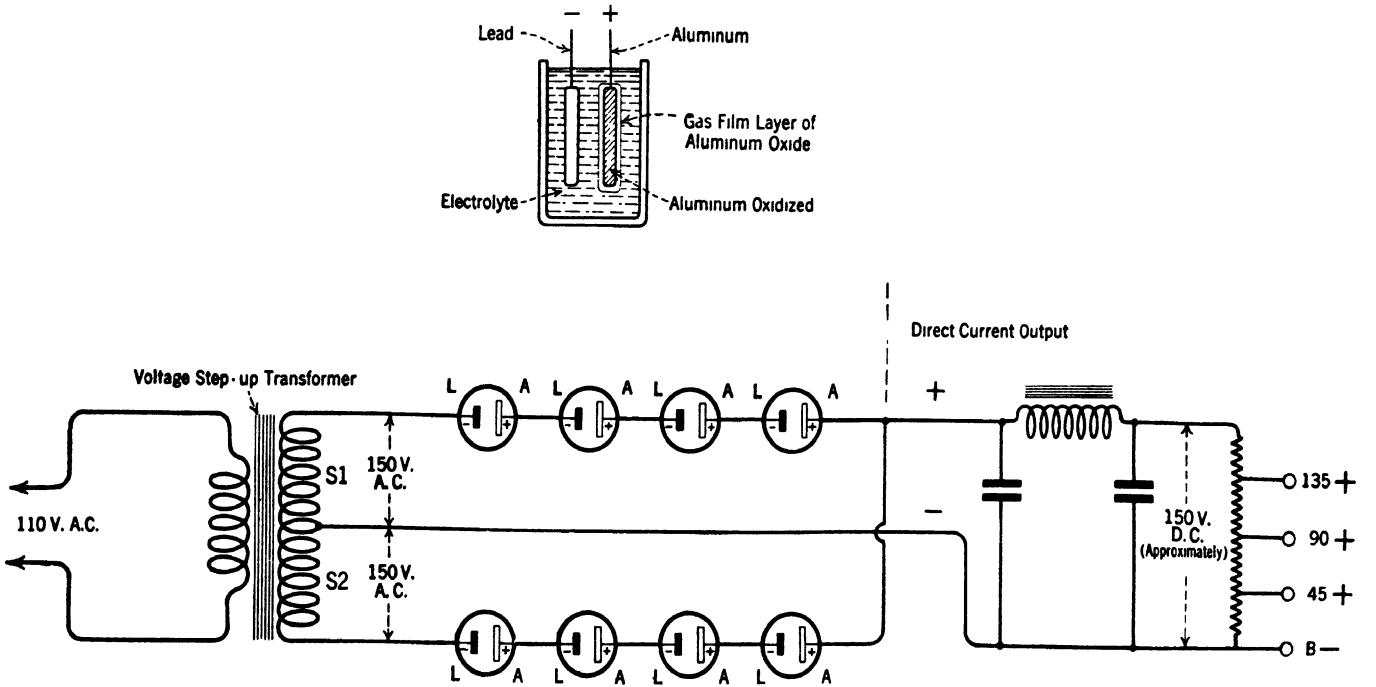

FIG. 249.—Circuit arrangement showing how several electrolytic jars are connected to provide full wave rectification. The upper sketch illustrates the principle upon which an electrolytic rectifier operates.

current, several cells must be connected in series to divide the load among them.

A group of cells may be arranged with respect to another group of cells so that both halves of the wave are rectified, which, when filtered and smoothed out, will produce a steady direct current. The actual theory involved in this action has long been disputed, but it is assumed in general that the operation depends upon a gas film which surrounds one of the metal plates and acts as an insulator when the cell is functioning.

When pure aluminum is used in a dilute borax or boric acid solution, it has been found that a maximum of over 1500 volts can be impressed across the electrodes without breaking down the resistance formed by the gas film between the electrolyte solution and the electrode. These jars can be used in high voltage circuits.

The action is somewhat as follows: the positive plate is aluminum and the negative plate is lead. The negative plate has no reaction, and simply acts as a terminal for the electrolyte solution, which is negative. When current flows to the positive aluminum plate, the metal is oxidized and a thin layer of aluminum oxide forms a gas film around the plate, as shown in the small drawing accompanying Fig. 249. Current will not flow through the cell under the high resistance of the gas film. However, when the current reverses, as it would in an alternating current circuit, it can flow from the positive to the negative electrode. This jar is used then as a rectifier, as it will not permit the passage of the positive alternations, but only those of the negative alternations.

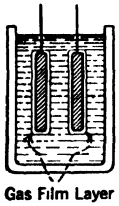

FIG. 250.—The principle of the electrolytic condenser. It is thought that the gas film layer built up around the electrodes as shown makes it possible to use this device as a capacitor.

Electrolytic Condenser.—An electrolytic jar may be employed as a condenser providing both plates are made of a material, such as aluminum, which becomes oxidized when current flows to the cell. (See Fig. 250.) The voltage applied across the cell will determine the thickness of the gas film of aluminum oxide which surrounds both plates. Current cannot pass through a jar in either direction when so constructed because of the high resistance offered by the gas film.

(4) **Dry Metal Rectifiers.**—The dry metal contact rectifier has proven to be very efficient, and is used chiefly for charging storage batteries and supplying the requisite direct current for electrodynamic loudspeaker operation. The theory involved in its action is thought to be as follows:

In a metal body there are always a certain number of free or loose

electrons in each unit of volume which may be readily detached or moved under some influence. Some metals have more free electrons than others, as disclosed in the study of vacuum tubes. It is assumed that the free electrons can move a short distance from the surface of a metal, perhaps only a millionth part of an inch. The electrons are then pulled back to the metal from which they emanated under the attraction of the positive ions with which the electrons were associated. This action, then, may be thought of as the movement of loose electrons around the surface. Copper oxide and other materials have long been thought to possess this inherent characteristic.

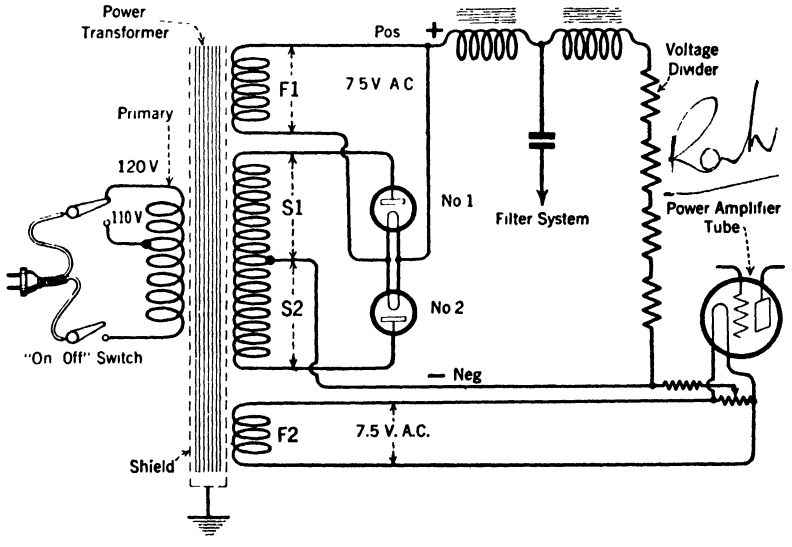

FIG. 251.—A conventional diagram of a rectifier circuit for the purpose of explaining the approximate ratio of primary to secondary turns in a power transformer supplying both high and low voltages.

When two metals are in very close contact, this electron energy acts to pass current at the junction point. If the electron field surrounding one metal has a greater density than the other, the field which has the greatest magnitude will facilitate the passage of electrons (or current) toward its metal surface more readily than toward the metal which has a field of less density. This is a rectifying action. The use of liquids, electrolyte solutions, or tubes, is not required.

Power Transformer Employed with Full Wave Rectifier.—The following suggestion will enable the reader to acquire a practical idea of the approximate number of turns of wire and gage of wire used in

winding the power transformer of a "B" eliminator. Refer to Fig. 251. The primary coil is usually wound next to the laminated iron core, while the secondary coils are wound over the primary winding. This construction provides highest magnetic field changes in the iron core. If the voltage applied to the plates of the rectifying tubes is approximately 270 volts each, and the input voltage from the a-c. lighting mains 110 volts, the turns ratio will be a little over 2 to 1. That is, the secondary, S_1 S_2, will consist of more than twice as many turns of wire as the primary coil in order to obtain this step-up transformation.

The secondary winding F_1 used to heat the filaments of the rectifying tubes are wound with fewer turns of wire than the primary coil. The ratio of turns is approximately as follows:

Let the voltage at the filament terminals be 7.5 volts and the input e.m.f. to the primary side from the lighting socket 110 volts a-c. The ratio of number of turns on the filament coil F_1 to the primary coil will decrease in the same proportion that the voltage decreases, or from approximately 110 volts input to 7.5 volts output.

To obtain these results, the primary winding will consist of about 550 turns of No. 22 B & S double cotton-covered wire which should be carefully insulated from the iron core with several layers of heavy insulating linen (impregnated with insulating varnish and called Empire cloth). Empire cloth is wrapped around it before beginning the secondary windings.

Next, plate section S_1 is wound with about 1300 turns of No. 30 B & S enameled wire, the end of which is brought out to furnish a mid-tap connection. This plate section winding is also insulated with several layers of Empire cloth before beginning plate section S_2. The beginning of S_2 is spliced to the end of S_1. This splice affords a mid-tap between the two plate coils and represents the negative potential side of the d-c. circuit. Plate section S_2 is also wound with about 1300 turns of similar sized wire. The beginning of S_1 is connected to the plate of rectifying tube No. 1, and the end or finishing-off wire of S_2 is connected to the plate of the second rectifying tube, No. 2. *Note:* One tube employing two plates would be connected in a similar way. There are several more layers of Empire cloth wrapped over the last plate coils.

The two filament heating coils are next wound on the transformer. The first section F_2 supplies alternating current to heat the power audio amplifier tube filament and it should supply approximately 7.5 volts alternating current for the 210 type tube. It will require about 25 turns of No. 16 TCC (triple cotton covered) wire to obtain this drop in voltage. Several more layers of Empire cloth are wrapped around the amplifier filament coil.

The last winding to be mounted is the filament heating coil for the rectifier tubes. They require a terminal e.m.f. of 7.5 volts to supply the normal electronic emission. This winding also will consist of about 25 turns of No. 16 B & S TCC wire.

A tap taken from the center of the last 25 turns is connected to the voltage divider resistor, forming the positive potential side of the d-c. circuit.

The iron core is made of thin stampings or sheets of silicon iron (laminations) which have been either lacquered or oxidized. The purpose of the laminated iron core is to reduce the heat caused by the continuous change in flux in the iron when alternating currents flow through the several coil sections. This is known as the iron loss in a transformer, or *hysteresis.*

Voltage Regulator Tube (Glow Tube).—The voltage regulator tube, type 874 (see Fig. 252), consists of two elements, an anode and a cathode, and contains a low pressure mixture of gases. It has been explained elsewhere how current conduction is accomplished by the ionization of gases. The most useful property of a tube of this kind is that the voltage drop across the tube remains nearly constant at about 90 volts for any value of current passing through it up to its maximum rating of 50 milliamperes. The current will increase through the tube when no current is being drawn by the radio receiver from the voltage-divider resistors or the output of the rectifier. For this reason the tube should be suitably protected by inserting sufficient resistance in series, if used for any great length of time, when carrying more than .05 ampere (50 m.a.).

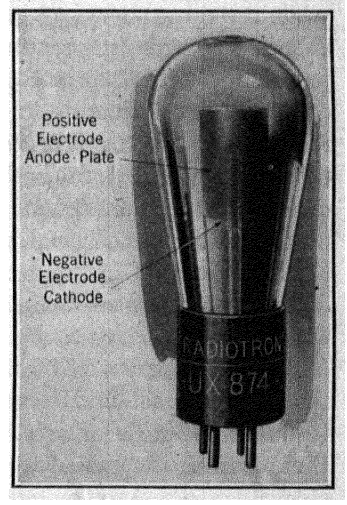

FIG. 252.—Voltage regulator tube, type UX-874.

The voltage regulator tube is connected as shown in Fig. 246, between the + 90 and negative side of the d-c. circuit, thereby placing it across a section of the voltage divider which is connected to the usual form of filter or smoothing-out circuit of the rectifier.

The action of the tube is somewhat of a reciprocating nature, because the plate current drawn by the tubes in the receiving set results in lowering by a like amount the current flowing through the regulator tube. The voltage will be maintained approximately constant at 90

volts until the receiving tubes reduce the current through the regulator tube to a low value.

The cylindrical element is the cathode (negative) and the wire element inside of the cylinder is the anode (positive), its shape and position being shown by the dotted outline.

To explain this action more fully, let us assign numerical values both for the current consumed in the plate circuit and for the direct current furnished from the output of the full wave rectifier. Suppose the regulator tube is connected between + 90 and − d-c. as shown in Fig. 243 and let the output of a rectifier circuit equal 50 milliamperes. Let the draw of plate current by the receiver tubes, and that which flows through the resistors, equal 30 milliamperes. Since the voltage regulator tube is shunted between + 90 and − d-c., then 30 milliamperes will flow through the resistors and the tubes in the receiving circuit, while the remainder, or 20 milliamperes, will flow through the regulator tube. The tube, the resistors and plate circuits of the receiver form a parallel or divided circuit (see Fig. 243). Now, let us change the load condition by adjusting the receiving tubes. Suppose resistors and receiving tubes together draw 35 m.a., then only 15 m.a. will flow through the path furnished by the regulator tube. Again, if the load conditions are altered and the receiver and resistors draw 40 milliamperes, the current through the regulator tube will drop to 10 m.a. In brief, the current in the d-c. line is maintained constant at 50 m.a., for either an increase or decrease of current drawn by the receiving tubes will be taken up by the regulator tube.

The line current of 50 m.a. is divided into that part which flows to the receiving set and through the resistors and that portion passing through the regulator tube. The direction of the direct current through these channels is indicated on the drawing. Only one amplifier tube is shown connected to the terminal of the voltage divider in order to trace out the path of the current flow and to simplify the explanation. The efficiency of the tube is very high in that the e.m.f. supplied to the receiving tubes will vary approximately only 5 volts between *no load* and *full load* conditions. By the reciprocating action of the regulator tube, the current is maintained practically constant between + 90 and − d-c.; therefore, the voltage will remain approximately constant between these two points.

Action of a Condenser and Choke Coil in a Filter Circuit.—A filter system consisting of one condenser and one reactance (choke coil) is illustrated in Fig. 253. Above the iron core reactor L there is graphically illustrated a pulsating current, as shown by the undulations of fluctuations in the line drawn from M to N. For a simple explana-

tion, these pulsations may either be due to a ripple in the direct current output of a d-c. generator, or may result from the rectification of an alternating to a direct current.

The pulsations or ripples in direct current from a generator are sometimes called *commutation ripples*, and in most cases are comparatively slight in a well-designed d-c. generator, one made especially for supplying plate energy to power tubes. The filter system in this case need not be so large, that is, the choke coils may be wound with less turns of wire and on a small laminated iron core.

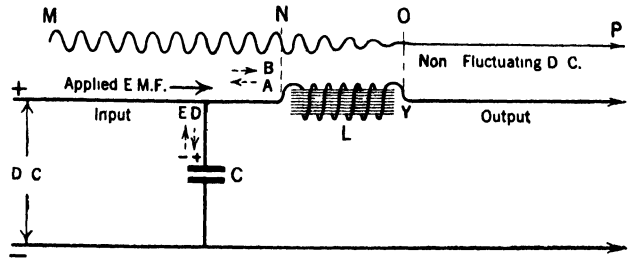

FIG. 253.—A simple filter circuit consisting of a condenser and a reactance (choke coil). The curve clearly illustrates how the filter acts to smooth out a pulsating current.

However, in the case of alternating current a step-up transformer is used to produce any desired a-c. voltage and this alternating current is converted into a direct current by the use of a rectifier. The rectifier will deliver a direct current as widely fluctuating in magnitude as the current in any one alternation of the a-c. cycle. The output of the rectifier is insufficient in so far as it does not provide a steady d-c. flow suitable for plate excitation. The filter apparatus required for smoothing out the fluctuations in direct current, following the action of the rectifier in changing alternating current to direct current, must in this case be quite large. The inductance of the choke coils and capacity of the condensers must be large enough to reduce the amount of the fluctuating direct current to prevent any modulation effects which would be reproduced and heard in the loudspeaker as a hum or purring sound.

The purpose of the filter system, Fig. 253, is to smooth out these pulsations and provide a steady, non-fluctuating direct current suitable for energizing the plates of vacuum tubes. The fluctuations must be reduced in amplitude to an amount necessary to prevent a modulation effect which is received as a hum as previously mentioned.

The filter system illustrated is only a part of the complete rectifier apparatus. The two elements shown, condenser and reactor, are used in this case merely to describe their combined action.

The action is as follows: When current in the d-c. line increases, the magnetic flux in the iron core of choke coil L increases, building up

in the coil a high reactance voltage because of the large inductance of the coil. Because its inductance is in the vicinity of 50 henrys it will tend to oppose this current rise in the circuit, due to the high counter voltage induced in direction of arrow *A*. This counter voltage is applied to condenser *C* indicated by arrow *D*, because *C* is connected to *L* as shown.

The condenser receives this charge, and would ordinarily hold it, if no further change of voltage occurred in the line. But the current in the line is fluctuating, and during one of the d-c. pulsations the self inductance of *L* will cause an e.m.f. to be generated in the direction of arrow *B*. This is the action of all inductances, for they tend to prevent any current changes in the circuit.

When the voltage in the line decreases, the condenser will release part of the charge it received when the current increased in the line. Therefore, the condenser supplies a new voltage to the circuit. This compensates for the decrease in the line voltage. The discharge of the condenser, which is shown by the arrow *E*, is clearly in the same direction and aiding the line or applied e.m.f.

Since the condenser tends to maintain a constant voltage in the line, current will flow uniformly through the circuit.

The condenser functions somewhat like a reservoir in storing up an electrical pressure. It receives a charge when the line voltage increases and gives up some of its charge when the line voltage decreases, always trying to equalize the changes and thus maintain a steady flow of current in the circuit.

Although this explanation is fundamental in regard to the filtering action, it is not complete, inasmuch as it has been found, in practice, that, when only one condenser and one choke coil are used, they will not always completely filter out or smooth out pulsations caused by rectified alternating current.

We have shown, however, in the line *N O* that the amplitude of the pulsations is lowered considerably through the action of the reactor in combination with the condenser, and from *O* to *P* it is shown that a reasonably steady direct current is supplied to the output circuit.

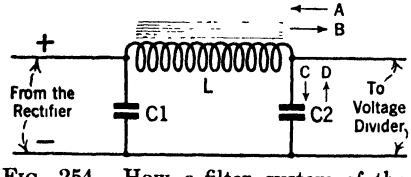

FIG. 254.—How a filter system of the "brute force" type is arranged.

Figure 254 illustrates two condensers C_1 and C_2, each connected to either side of the filter reactor *L*. The action of this system is similar to the one just described. By the addition of condenser C_2 the process of smoothing out the pulsations is more complete, because con-

denser C_2 will charge and discharge as shown by arrows C and D provided there is a slight ripple or fluctuation of the direct current flowing from the reactor, which sets up an e.m.f., as shown by arrows A and B.

Figure 255 shows two choke coils, L_1 and L_2, and three filter condensers C_1, C_2 and C_3. The filter condensers may have a capacity of approximately four or more microfarads and the filter reactors of the order of 30 or of 50 henrys of inductance. This network usually constitutes an efficient filter system. The different types of filter systems are quite similar in design.

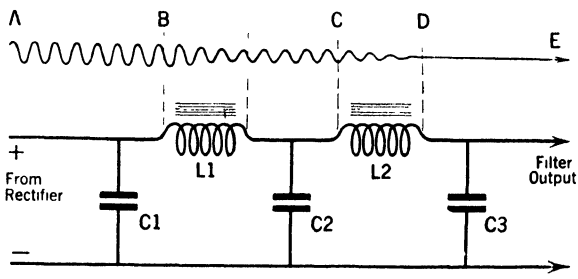

FIG. 255.—This filter system consisting of choke coils and condensers is used to smooth out rectified A-C. to provide a steady or non-fluctuating direct current.

In Fig. 255 the fluctuating direct current is shown by the waving line AB. Line BC illustrates the irregularities partially filtered out by the condensers and coil L_1, and the line CD shows a further smoothing out through choke coil L_2 and its condensers, the current being finally delivered as a substantially constant non-fluctuating direct current, shown as the line DE. Condenser C_3 should have sufficient capacity to supply the current requirements of a receiver at such times as when the modulation of a broadcast signal rises to peak values.

The Fundamental Action.—Due to the large amount of flux set up in the iron core by the high impedance choke, a current variation through its windings will cause the flux permeating the iron core to vary considerably in magnitude. The magnetic lines of force will cut back on the turns of wire when current changes in the coil and induce an e.m.f. within the circuit in such direction that the rise or fall of current will be opposed. The condenser is charged by the induced voltages generated by the self-inductance of the choke coil. Therefore, the condenser will discharge and supply voltage to the circuit when the voltage in the line lowers to a value less than the voltage already in the condenser. The choke coil tends to oppose current changes and the condenser opposes voltage changes. Thus, when working in correct combination of respective electrical values, a system of choke coils and condensers will maintain a steady direct current flow. The oscillograms, Figs. 256*a* and 256*b*, show the d-c. fluctuations before filtering and after the smoothing-out process to furnish a steady or non-fluctuating direct current to the voltage divider.

Choke Coils.—The electrical design of a filter choke coil (Fig. 257) must provide that the winding will not offer an excessive resistance to the normal flow of direct current through it, and that the self-inductance must be sufficiently large to smooth out fluctuations in the direct current. In order to build up a large concentrated magnetic field without increasing the turns of wire, the coil is always wound over an iron core, the core usually being in the form of a square. The chokes are made with butt joints, and have a small air gap in the iron core (this increases

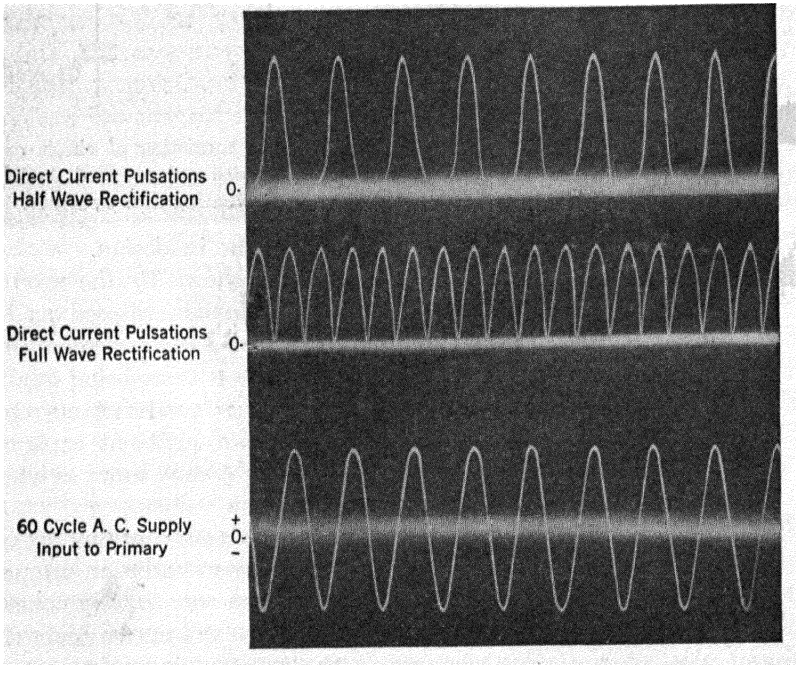

FIG. 256*a*.—An oscillogram illustrating the characteristic wave form of the output of a half-wave and full-wave rectifier before filtering.

the reluctance of the magnetic circuit) to prevent magnetic saturation of the core by the magnetic flux created by high values of direct current flowing through the coil winding.

It will be noted on some circuit diagrams that the choke coil has two ratings: (1), its d-c. resistance in ohms; (2), its inductance in the unit of a henry.

The correct size of the air gap is of considerable importance when large rectifying systems employ a rectifier tube capable of supplying 400 milliamperes d-c. to the plate circuits. When from 100 to 400 milliamperes flow through a choke winding, the iron core itself should

be of ample size, but the width of the air gap should not be excessive, because if too large the necessary inductance could not be obtained to build up a sufficient reactance voltage to prevent fluctuations. On the other hand, if the width of the air gap is insufficient the core will become saturated at high d-c. values and a large degree of variation in the fluctuating d-c. (after rectification) will retard the setting up of a *varying magnetic flux* of adequate magnitude in the core, thus resulting in a reduction of the filtering action of the choke, and consequently allowing a fluctuation in the voltage fed to the plates of the tubes.

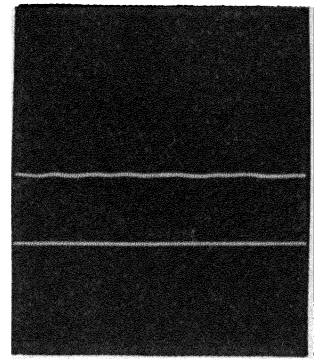

FIG. 256*b*.—An oscillogram showing the steady direct current obtained from the output of a filter system.

The choke coils used with rectifying tubes of lower output (those rated at about 100 milliamperes or less) do not require such particular consideration of the air gap because the size of the core can be designed to perform the filtering action satisfactorily. Laminations should be securely clamped to prevent movement.

Filter Condensers.—The condensers should have a large value of capacitance in order to enable them to receive the maximum charging current supplied by the reactance voltage set up by the choke coil. The condenser dielectric must be capable of withstanding the full voltage of the rectifier without danger of puncture, or disrupture, for at times such circuits develop a high voltage surge far above the ordinary working voltage.

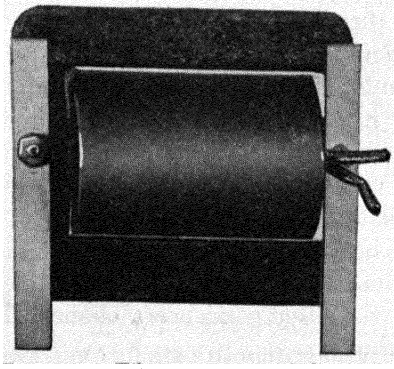

FIG. 257.—Filter reactor (*choke coil*).

Filter condensers are of the fixed type and employ either a mica or paper dielectric. In modern practice, tinfoil is used as the conductor or plates. Alternate layers of tinfoil are separated by the dielectric material (paper or mica) and the tinfoil and dielectric are subjected to a very high pressure, which results in the foil becoming almost a part of the dielectric. In this way any movement of the materials is pre-

vented. Mica has always been known to possess a high break-down voltage, but it is only with the development of high current eliminators and rectifiers that paper condensers have been manufactured to perform satisfactorily in circuits of greater than perhaps 1000 volts d-c. This is made possible by processes in manufacture that make a homogeneous structure of the paper which prevents carbonization or puncture, even when the condenser is subjected to high potential surges. The working voltage of paper condensers can be made to reach a limit at about 2500 volts. Such condensers are suitable and have their particular use in filter systems and in other circuits, where the operating potentials are not above the rate printed on the condenser name plate. The mica moulded-type condenser is built in various sizes for operation from the lowest to the highest voltages that are encountered either in filter, receiver or transmitter circuits. In all cases condensers used in any power circuit should be capable of withstanding high continuous operating voltages with a large margin for a safety factor.

The dielectric material of any condenser is not an absolutely perfect insulator, for there is always a certain amount of leakage current through the material, almost infinitesimal in the best grades of dielectrics, but nevertheless present. If the dielectric was composed simply of a single sheet of paper, and a weak spot appeared in the paper, in most cases it would extend through from side to side. A slight leakage current at this point would generate some heat, and carbonization would begin, the weak spot becoming weaker and allowing more leakage current to pass until finally the paper would break down under the strain and puncture. In order that this disintegration process may be avoided, the dielectric material should be made of a plurality of single thicknesses of paper or papers, minimizing the possibility of any weak spots in adjacent layers coming in exact alignment. Thickness of a material does not indicate dielectric strength and therefore dielectric layers of the material may be used in either mica or paper condensers to increase the electrical strength, or safety factor.

It is of interest to mention that in certain circuits a persistent hum can sometimes be overcome by inserting choke coils of suitable size in both legs of the circuit with the filter condensers connected across the line on either side of the chokes.

CHAPTER XVII

CONDENSERS AND THEIR PRACTICAL APPLICATION—HOW A CIRCUIT OSCILLATES

Condensers.—Condensers are classified into two groups, fixed and variable types, and also into two general divisions according to their dielectric strength, namely:

(1) Low voltage condensers.
(2) High voltage condensers.

Condensers subjected to a working potential of almost 1000 volts, or more, are usually placed in the category of *high potential condensers* and those rated less than this arbitrary value may be classed as *low potential condensers.* Refer to the discussion on condensers under the caption "Action of Condenser and Choke Coil in a Filter System."

High voltage condensers employed in radio transmitting circuits are grouped according to their dielectrics, for example, Leyden jar or glass dielectric type, air dielectric, oil dielectric and mica dielectric. The mica moulded type is rapidly gaining favor and is now used in preference to other types in radio transmitting equipment, because of its ruggedness and compactness, as well as its freedom from requirements of periodic attention or maintenance, while the replacement of a damaged condenser by a spare condenser involves no difficulties.

The main condensers to be described are:

(1) Leyden jar, see Fig. 258.
(2) Compressed air condenser.
(3) Oil type condenser.
(4) Mica condenser, see Figs. 259 and 260.
(5) Paper dielectric condenser.

(1) **The Leyden Jar.**—The Leyden jar shown in Fig. 258 is one of the earliest forms of high potential condensers. It is 14 in. in height, 4½ in. in diameter and has a standard capacity of .002 microfarad. The glass jar is copper plated on both outside and inside. The copper is deposited on the glass to within 3 in. of the top by electrolysis, the

copper forming a strong and tenacious layer on the glass. Each copper plate is separated by the glass. The glass is the dielectric and builds up electric charge. Potentials as high as 30,000 volts may be applied without danger of puncturing the glass.

Wire connections usually are not soldered to the copper plates.

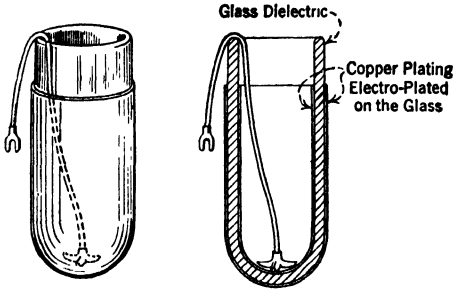

FIG. 258.

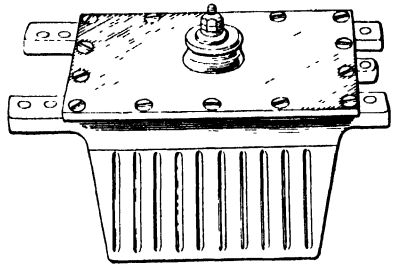

FIG. 259.

FIG. 258.—The Leyden jar. One type of high potential condenser.

FIG. 259.—Dubilier high-voltage transmitting condenser with fixed capacity. The capacity of this condenser is 0.002 mfd. and will safely withstand a potential of 25,000 volts.

Special racks hold the Leyden jar with a bus bar along the rack, making proper connection when it touches the outer plate of the condenser. A flexible woven wire, either soldered to the inside copper plate, or a clove-shaped anchor resting on the bottom, provides electrical connection. A terminal lug attached to the other end of this wire connects to a second bus bar mounted over the jar.

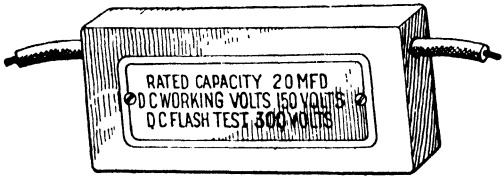

FIG. 260.—A type of low-voltage condenser employing specially treated paper as the dielectric and tinfoil as the conducting material (plates).

If a Leyden jar should puncture, due to a heavy potential surge through the circuit, the point where the glass fractures is generally visible. A spark discharge will be seen while the condenser is operating in the circuit. A temporary repair can be made by filing away the copper plating on the outside of the jar an inch or more from around the point of fracture.

(2) **Compressed Air Condenser.**—An air condenser consists of a series of plates mounted in a sealed cylindrical steel tank. Air is pumped into the tank to a pressure of about 250 lb. The compressed

air, having a high dielectric strength, may be used in high potential circuits. In the event of the air resistance breaking down no permanent damage is done. This type is not practical, on account of the compressor pump and auxiliary equipment necessary to maintain the pressure.

(3) **Oil Type Condenser.**—In this condenser sheets of glass or other insulating material are coated with tinfoil to a reasonable distance from the edges of the glass to prevent brush discharge. The plate and dielectric sections are then placed in a suitable tank containing insulating oil (oil free from all minerals). The pure oil is used for the dielectric material. Hence we find that oil, compressed air, and other materials not in common use have good dielectric properties and are capable of building up electrostatic charges of electricity.

(4) **Mica Condenser.**—The moulded mica condenser, one type of which is illustrated in Fig. 259, has become the standard type for use in power circuits and high frequency, high voltage circuits. This particular condenser is rated with a capacitance of 0.002 microfarad to be used in a transmitting set with a maximum working voltage of 25,000 volts.

A thousand or more alternate sheets of mica and tinfoil are stacked on top of one another and subjected to a very high pressure to form one section of the condenser. The tinfoil sheets and mica sheets almost become an identical unit due to the high pressure, thus preventing movements of the materials when charging and discharging. Several such sections are mounted in an aluminum case with each section heavily insulated from its neighbor. The sheets of foil are smaller than the mica to prevent brush discharge at the edges. The sections are connected together with jumpers to complete the assembly. The connection for one set of plates passes through the center of a thick insulated cover plate to the large terminal post as shown in the illustration. The opposite set of plates is connected by a jumper to the aluminum case. The surface of the aluminum case then serves to make external electrical connection.

While the full voltage on the line acts across all the sections, only a low potential is actually impressed across a single section or unit, thus minimizing brush discharge, one of the contributing causes for condenser breakdown.

A special wax compound is poured into the assembled condenser before the cover plate is attached. This acts to prevent shifting of the mica and foil and prevents any change in capacitance due to moisture or air that would otherwise creep in. The aluminum case also acts as a shield to prevent changes of capacitance due to static coupling between

the condenser and other parts mounted on the panel or frame of the transmitter.

Figure 261 illustrates how the plates of a condenser are interleaved with short connecting tabs extending from opposite layers of foil. This method of construction conserves space, for it can be readily seen that thousands of square inches of effective plate area may be obtained from a comparatively small-sized condenser. Each alternate layer of tinfoil and the dielectric material between them form a condenser. The drawing shows the five condensers connected in parallel combination between sides *A* and *B*. Actually five different condensers are not employed, but the electrostatic capacity between *A* and *B* is five times as great as that of any of the individual small condensers marked 1, 2, 3, 4, and 5. A single condenser of equivalent capacity consisting of only two plates similarly spaced, using a single dielectric, would necessarily require a plate area five times as large as any of the individual small plates.

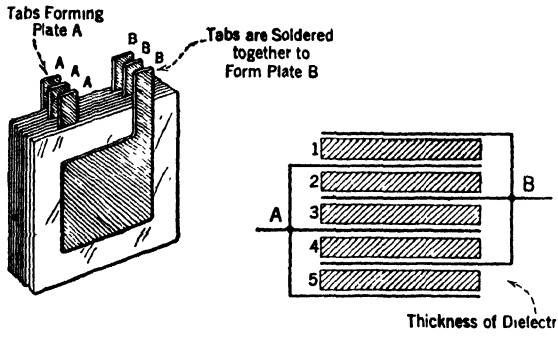

FIG. 261.—A condenser may be assembled by this method. The condenser plates are separated by a dielectric material in the manner suggested by the right-hand sketch.

(5) **Paper Dielectric Condenser.**—Condensers employing wax paper or paraffin paper for the dielectric are less expensive to manufacture than mica condensers, but their use is restricted. All condensers should be marked in some way to indicate their working voltage. The paper condensers are divided into five classes, according to their rated unidirectional d-c. working voltage of 150, 300, 500, 750 or 1000 volts.

Paper condensers are usually rolled or wrapped. Spools of tinfoil glued to paper sheets and paper are wound on a bobbin so that the paper separates alternate layers of tinfoil. After completing a rolled condenser, connection lugs, or pigtail wires, are soldered to either side of a tinfoil sheet and brought outside to terminal lugs or binding posts.

The Ideal Condenser.—The requirements for an ideal condenser, if one could be manufactured, would include the perfect insulation of its plates; the dielectric would be immune from rupture or puncture; the principal causes of losses, due to leakage between plates and other losses incurred due to heating or dielectric absorption (hysteresis loss) would

be eliminated. A compressed dry air condenser comes very near to these requirements, which means close to perfection.

All condensers in the oscillatory circuits of a transmitter are subjected to a *high voltage strain* when connected across the secondary winding of a high voltage transformer.

The maximum possible charge a condenser will take depends upon its insulation, that is, the strength of the dielectric to resist a disruptive charge or puncture. This property of the material is known as the *breakdown voltage*, sometimes abbreviated " BDV."

Losses in a Condenser.—It has been explained that the process of charging and discharging a condenser is gradual. It is supposed that the losses occurring during this process are due to any of several causes:

(1) Heat produced in the dielectric called *dielectric hysteresis.* Eddy current effects are due to considerable work done when a condenser is alternately charged and discharged at a very high rate as in radio-frequency circuits. Energy is also expended in the form of heat and waste.
(2) Brush discharge, which has been discussed before in this chapter. Brush discharge is particularly noticeable when the edges are either dirty or greasy.
(3) Losses also occur due to leakage between the plates.
(4) Dielectric absorption occurs when a static field is set up between a charged condenser and some other nearby object. A charged condenser seeks to give up the charge which it holds to some other body. On this account condensers should not be mounted too close to coils or inductances in radio-frequency circuits.

There are two things a person should ascertain before connecting a condenser in any circuit:

(1) The capacity of the condenser.
(2) The voltage rating.

The manufacturer usually stamps these specifications on a card or plate attached to the condenser.

The questions have often been asked: " Can a bypass condenser be used as a blocking condenser? " or " Can the same type condenser be used to perform some other function in different parts of the circuit? "

We may better answer these questions by stating that any condenser of the correct capacity, regardless of its shape or material, may be used in a circuit to perform any function requiring the use of a condenser, with the following provision: The dielectric strength of the condenser

must be great enough to withstand not only the working voltages in the circuit but must resist puncture even when high potential surges rack the condenser.

The Practical Application of Condensers in Circuits.—When a condenser is connected in a circuit, it must fulfill the following requirements:

(1) It must have the correct capacity for storing up the maximum charge that is given it by the currents that flow in the circuit, and it will then return this energy to the circuit in the form of an electromotive force, which will again cause current to flow through the circuit. This means that the rate at which a condenser is charged and discharged is governed by the frequency of the impressed e.m.f.

(2) The dielectric of the condenser must be able to withstand the working voltage of the circuit.

(3) It has been shown in our previous discussions that a condenser will block a flow of direct current, but will pass alternating currents.

(4) Since a condenser is charged and then discharged, it is obvious that the discharged energy can be applied to some other circuit, which may not be in common with the circuit which impressed the charge on the condenser. The condenser is said to be in common with both circuits. In other words, the condenser can *receive* a charge from one alternating current circuit and *deliver* its charge to a neighboring alternating current circuit. Two independent circuits, therefore, can be mutually coupled together by a condenser and energy can be transferred from one to the other through the medium of the electrostatic field.

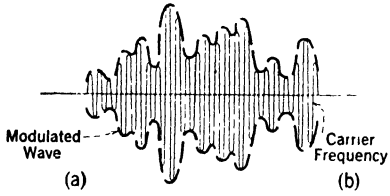

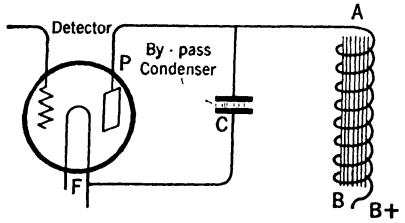

FIG. 262.—This diagram shows why a small bypass condenser is placed between plate and filament of a detector tube. The condenser serves to bypass the carrier frequency, i.e., the radio-frequency component of the plate current. The modulation or audio component passes through the plate coil *AB*.

When the frequency of the current in a circuit is very high, the condenser capacitance required to pass this frequency efficiently should be low, because of the short time in which the charge and discharge takes place.

With the above considerations in mind, we will illustrate several of the practical uses of condensers in radio circuits. In Fig. 262 a condenser, called a *bypass* condenser, is connected between the plate and

filament of the tube. This condenser has a capacity which is not critical to any one frequency, but which should pass all of the carrier frequencies in the broadcast range.

The tube shown is a detector tube and its function is to convert, or change, the incoming signal oscillations into an audio-frequency current.

A particular case is cited showing a modulated radio-frequency current (carrier current) designated by curve *b*. The iron core inductance designated by *AB* ordinarily will not pass any radio-frequency current, because of its high inductive reactance, but it may do so if its distributed capacity is high. The average plate current variation of the radio-frequency oscillations is at an audible frequency as shown by the modulated wave marked *a*, and this audible frequency will pass through the inductance.

Any current that flows through the inductance will be amplified in the loudspeaker, because the inductance is the primary winding of an audio-frequency transformer, which couples the detector tube circuits to the audio-amplifier circuits.

It is readily seen that only current which will actually reproduce either music or voice signals (or telegraphic signals) with fidelity should be permitted to flow into the inductance. Therefore, if a condenser of proper capacity is connected between plate and filament, the alternating component at radio-frequency (called the *carrier frequency*), will bypass through this channel. Consequently these high frequencies then are excluded from the inductance since they are bypassed through the path provided by the condenser.

The quality of the sound reproduction in a loudspeaker will be improved if we can remove from the circuits any extraneous electrical oscillations which might interfere with the audio-frequency current.

In Fig. 263 condenser C_1 is used in the capacity of a coupling condenser, but in this particular use it is called a *grid input* condenser. The condenser is connected to the filament on one side and to the plate on the other side through the coil L; the condenser is also connected on one side to the grid of the tube, with condenser C_2 in series. The condenser C_1, therefore, is connected between the grid and the filament.

Let us follow out what would occur if the r.f. oscillations pass through inductance L caused when this tube functions in the circuit as an oscillator. We know that this inductance will oppose variations in current because of its self-inductance and in so doing will induce an e.m.f. in the circuit.

This voltage is applied to condenser C_1 because C_1 is connected to L as indicated on the diagram. It can be understood that this e.m.f. will, therefore, charge the top side of condenser C_1 as shown. When the top

side of C_1 is charged to a negative potential, then the lower side will be charged to a positive potential.

The wire X connects one side of condenser C_1 to C_2, and since the latter condenser is connected in series with this circuit, C_2 also will become charged, as indicated in the drawing. One side of the condenser C_2 will become negative and the opposite side positive. Since the grid is connected to the condenser it will receive the same charge as the plate to which it is connected.

It is seen that the function of C_1 has been to impress a voltage on the grid; therefore, the voltage drop across C_1 will cause a voltage drop

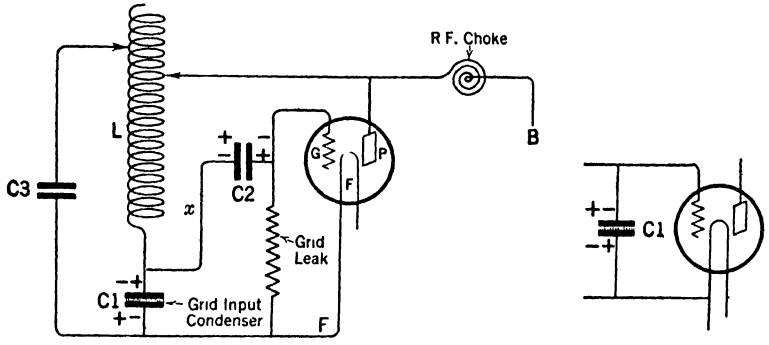

FIG. 263.—A simple diagram of an oscillator circuit showing how condensers may be effectively used in various parts of radio equipment. One of important uses of a condenser is illustrated by the position of $C1$ in the circuit. The voltage drop across this condenser is applied between grid and filament to provide the grid excitation for the generation of continuous r.f. oscillations. The small sketch to the right shows this principle.

between the grid and filament, for the filament is connected to the lower side of C_1.

When condenser C_1 is charged with an alternating e.m.f., as it will be when current rises and falls in coil L, then this alternating e.m.f. will be impressed between the grid and the filament of the tube.

We will not discuss further the functioning of the entire circuit, except to disclose the manner in which radio-frequency plate-current variations can be returned to, or fed back into, the grid circuit as an alternating e.m.f. applied to the grid. In brief, a current increasing and decreasing in inductance L will produce an alternating voltage (voltage drop across condenser C_1) and the grid of the tube will be impressed with an alternating potential. In other words, there will be a voltage drop between grid and filament similar to the voltage drop across condenser C_1.

In the smaller drawing of Fig. 263 we have shown in simplified form

how condenser C_1 is connected to the grid and to the filament, omitting condenser C_2, which is used as a blocking condenser.

Condenser C_2 will pass the alternating e.m.f. to the grid, but will block any direct e.m.f. which is applied to the plate. Condenser C_2 must be connected in this manner, or the plate current will flow through the inductance L up to the grid and charge the grid with the same d-c. potential which is applied to the plate. Refer back to the small figure. It is very clearly shown that if we have a voltage drop across C_1, designated by the opposite signs, positive and negative, the same voltage drop will be applied between grid and filament.

In Fig. 264, the variable short wave condenser C_1 is connected in series with inductance L_1 and ground. This is called the antenna or primary circuit. The condenser C_2 with inductance L_2 comprises the tuned secondary circuit. Condensers used in this way do not, in any sense, couple circuits together. Their sole function is to provide the necessary variable capacity to tune the circuits to similar frequencies, thus placing them in resonance with the frequency of the incoming signal which we desire to receive.

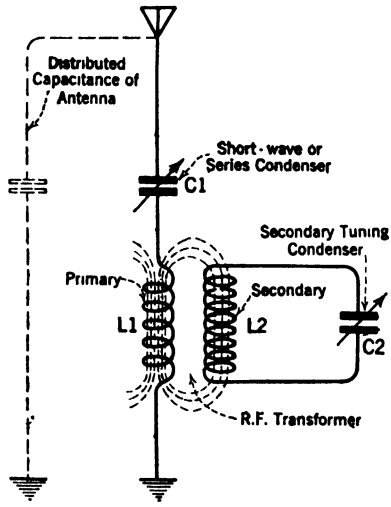

FIG. 264.—Showing how incoming radio signal power is transferred from the open (primary) circuit to the closed (secondary) circuit and the use of variable condensers.

Capacitance Employed to Couple Radio-Frequency Circuits.—In Fig. 265 let the coil L_1 perform the same function as the coil L_1 in Fig. 264. Then an alternating e.m.f. will be generated across L_1 when alternating current flows through it from the signal wave impinged on the antenna from some distant transmitting station.

The oscillatory circuit comprising L_3 and C_3 is the secondary tuned circuit and will function similarly to the circuit L_2 and C_2 in Fig. 264. It is seen in Fig. 265 that L_1 and L_2 are statically coupled together through two variable condensers, C_1 and C_2, whereas L_1 and L_2 of Fig. 264 are mutually, or inductively, coupled, and any transfer of energy from one inductance to the other is through the medium of the electromagnetic field, produced by coil L_2. This is called *magnetic coupling*, to differentiate it from *static or capacitive coupling* as employed in Fig. 265.

The transfer of energy from coil L_1 to L_2 is through the medium of the electrostatic fields in the two coupling condensers. The condenser may be called a *capacitor*. When the condensers are charged with an alternating e.m.f. by the coil L_1 an alternating e.m.f. will be impressed across coil L_2, and alternating current will flow through L_2, designated by the arrows.

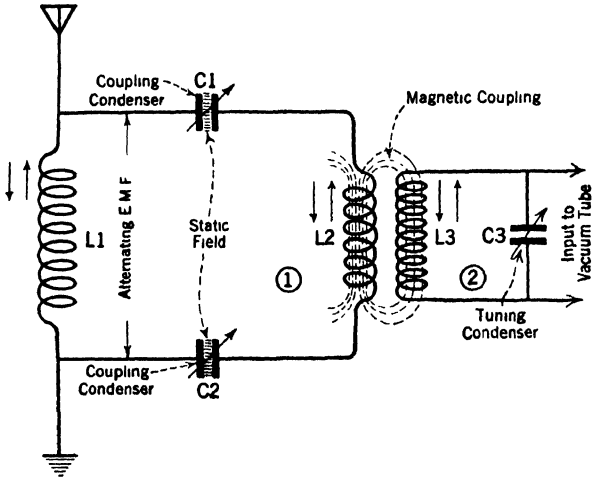

FIG. 265.—A receiving set may employ electrostatic (condenser) coupling between the antenna and the tuned circuit associated with the vacuum tube.

The magnetic field then builds up around L_2 and transfers r.f. energy to L_3, due to electromagnetic induction, inducing an alternating e.m.f. in L_3. Inductances L_2 and L_3 are inductively (magnetically) coupled. The coupling between L_1 and L_2 is called *direct capacitive coupling.*

The circuit L_3 and C_3 is the secondary circuit, and L_1 is the primary circuit. When the coupling condensers are variable, their capacities can be so adjusted that the circuits comprising them may be placed in resonance with the frequency of the current flowing in L_1.

Figure 266 illustrates the use of a condenser in coupling the plate or output circuit of a power amplifying tube to a loudspeaker reproducing device. This method is sometimes called impedance coupling with a capacity *take off.*

By consulting the drawing it is seen that the plate current of the tube does not flow through the winding L_2 of the loudspeaker electromagnet, because condenser C_1 does not permit actual direct current flow. The action is as follows:

An audio-frequency current circulates through the winding of the iron-core impedance or plate reactor L_1 from plate to $B+$, which sets up a high-reactance voltage due to the current variations. This alternating voltage generated across coil L_1 is impressed on the coupling condenser. The arrows show the alternating voltages impressed upon

condenser C_1 and therefore only alternating current carrying the signal characteristic will pass through the loudspeaker unit L_2.

Inductance and Capacity.—Circuits designed to carry high frequency alternating currents employ the use of inductances (coils) and condensers. A condenser is a device with metal surfaces, called plates, which are separated by an insulating medium or non-conductor, called the dielectric material. All non-conductors of electricity, such as mica, glass, waxed paper, and air, are classed as non-conductors or insulators and are forms of dielectric material. The phenomenon whereby a dielectric becomes electrically charged, when an electrical pressure (difference of potential) is applied to its surfaces, is discussed fully under the electron theory of condenser charges. The circuit connections are made to the plates, because the plates distribute the charge uniformly over practically all of the dielectric.

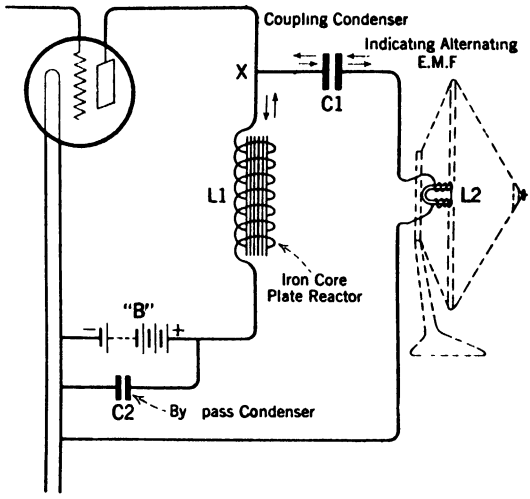

FIG. 266.—One method of coupling the output of a power amplifier tube to a loudspeaker known as "choke coil" or "impedance" coupling. The plate direct current does not flow through the speaker windings. The coupling condenser permits the passage of audio-frequencies from the plate circuit to the loudspeaker.

As long as the e.m.f. is maintained across the condenser the dielectric is said to be charged to a certain voltage. It is held under a pressure strain with the charge resting on the dielectric surfaces in the form of a *field of force*, termed an *electrostatic field*. This action is analogous to *elasticity* in matter. A coil spring, when pulled, will stretch and be held under a tension, but when the pulling force is removed, the recoil of the spring will develop a counter pulling force of its own, which is *pressure*, and it may be made to do useful work.

When the e.m.f. which charged the condenser is discontinued the energy in the dielectric will react to restore the original normal condition. This reaction is called *discharge*, and it is really an equalizing of the potential difference in the condenser, thus relieving the strain within. This pressure, when released, will exert an applied force, in

the same manner as any e.m.f., in setting up a current flow in the circuit of which the condenser is a part. The current will continue flowing until no potential difference exists between the plates. An analogy is useful: the condition in a tank filled with compressed air and the behavior of the air confined in a sealed tank and held under compression are about the same. For instance, air will continue to rush from a compressed air tank when the valve is opened, as long as pressure remains in the tank. A tank holding a given quantity of air under a high pressure, or a condenser holding a given quantity of electricity under an e.m.f., in either case will seek to reduce the pressure within. The point which we desire to emphasize is that, if conditions are favorable, the result is a discharge or the giving up of energy and in return the development of other energies. Current will flow through a circuit from a condenser when it is discharging in a direction opposite to the flow of the charging current. Therefore, we might say that current flows up to and away from a condenser, but does not actually pass through it.

In the case of an air tank, let us suppose that only one pipe line is connected to the tank. This line is used when filling the tank, and may be used later as the supply line to furnish air for utility purposes. Compressed air will flow through a pipe when the tank is being emptied in a direction opposite to its flow when the tank is being filled. During all of the time the tank is filling the compressed air within offers an increasing back pressure which reacts against or opposes the line pressure of the compressor pumping the air.

We know that when the tank is empty, there is no back pressure, but when air begins to rush in, as at the instant when the tank begins to fill, the counter or back pressure gradually rises. This opposing pressure slows up the quantity of air flowing from the compressor into the tank, and finally the air flow will stop when the pressure within the tank equals and opposes the force of the pump, for the tank is then filled to its capacity.

The behavior of air when under pressure can be observed in the filling of the inner tube in the tire of an automobile. Much greater effort is required when pumping and the air flows more slowly as the pressure within the tube increases, although at the start, with no air under compression in the tube, less effort was needed to pump and yet at that time the air flowed *faster*.

This is also true of a condenser for when it is charging, the current slows up, decreasing in strength as the voltage in the condenser increases.

In a circuit of all capacity (not a practical condition) (Fig. 115) the

condenser functions similarly to the air tank, in that it is a sort of reservoir capable of storing up energy. The air seems to flow ahead of the pressure as it rushes out of a fully charged tank, and similarly the discharge current in a *capacity circuit* will rush ahead of the condenser voltage by 90 deg.; that is, the current has what is termed a *leading phase.*

The potential difference across the plates of a condenser changes values quickest at the instant of rising from zero (the same as the pressure in the tank would do at the start), and it is then we have the greatest amount of current flowing into the condenser.

The reactance voltage, or back e.m.f., developed in a condenser while it is charging, opposes the charging e.m.f. As the charge builds up in the condenser, the back voltage increases, lowering the rate at which the charging current flows into the condenser. When the condenser is fully charged, current will cease to flow, because the resultant voltage on the line will be zero. In other words, the condenser e.m.f. will then oppose and equal the charging e.m.f. on the line. The current flow decreases as maximum pressure, or voltage, is reached.

The quantity of electricity which a dielectric can *displace,* that is, the quantity of charge it holds, is known as its *capacity* and the pressure within, due to the strained condition under which the dielectric is placed, is designated as the voltage or e.m.f. in the condenser. While the current which placed a charge in a condenser may be decaying or diminishing, as during a certain period in the cycle of alternating e.m.f., the effect of the condenser will be to discharge and supply the circuit with its e.m.f., tending to prevent the lowering of the voltage in the circuit. Therefore the condenser upon releasing its energy actually supplies a new e.m.f. to the circuit.

The reader has been advised in the foregoing paragraphs that when there is inductance in a circuit, due to its reactance, the developed e.m.f.'s tend to prevent any current changes. When there is capacity in a circuit, the electric charge in the condenser tends to prevent any voltage changes. This force, power, or energy, which rests in the condenser, is returned to the circuit as an applied voltage and current will flow under this pressure in the opposite direction to which it received current when being charged. Hence inductance and capacitance form an antithesis.

We will now sum up the action of an alternating current circuit and point out why a circuit composed of both inductance and capacity responds to an alternating e.m.f.

The changing electromagnetic field surrounding an inductance induces an e.m.f. in the circuit when the current increases and decreases,

due to the self-inductance of the circuit. While the current lowers, the induced e.m.f. is applied to the circuit in the same direction as the line e.m.f. and current continues to flow momentarily. This movement of current will charge the condenser, and, when the current ceases to flow, the condenser, having in the meantime developed an e.m.f., will begin to discharge; that is, the static or electric force possessed by the dielectric is now being dissipated and current will again flow under the voltage which the condenser applies to the circuit.

The inductance effects are comparable to *inertia* and simply keep the current moving, just as an engine's flywheel continues in motion after the power is stopped. The condenser or capacity effects which store up and supply the circuit with electromotive force may well be classed as elasticity.

It is obvious that when an alternating e.m.f. is impressed upon a circuit, consisting of inductance and capacity, energy when once established, either as a *field of force* around an inductance, or as an *electric charge* in a condenser, will tend to cause a continuation of the current movements. This is due to the opposite reactions set up by the inductance and capacity. If the circuit has a low reactance and minimum resistance there may be many movements or surges of current (called oscillations) back and forth before the oppositions finally *damp* out the energy. How the condenser receives its initial charge will be explained later. The decay or diminishing of the energy in the oscillations is called *damping*. Where a circuit has a high ohmic resistance, the damping will be fast, the energy being dissipated quickly in the form of heat and fewer oscillations will take place. See "Simple Analogy of Resistance and Its Effect upon Damping."

A circuit which is designed to offer only low impedance to an alternating current must have a low reactance, and also a low resistance, because both of these factors together represent impedance. Any introduction of resistance in the circuit will increase the damping of the circuit. It should be noted that although the oppositions due to inductive reactance and capacity reactance differ in their effects (one might be called a negative reactance and the other a positive reactance), they individually have the same net result in limiting, or slowing down, the current flow. Consequently their reactances are measured in *ohms*, the same unit by which the circuit resistance is measured.

When a magnetic field surrounding a coil has been established to its highest density, the greatest amount of effectiveness has been brought about. Likewise, when a condenser is fully charged, producing the highest e.m.f. possible across its plates, the maximum work again is accomplished. These ideal conditions are obtained only when the

inductive reactance and the capacity reactance are so balanced that they equal and neutralize each other, permitting maximum current of a certain frequency to flow. It requires a definite time for the applied e.m.f. on the line to overcome the oppositions which the building up of these energies represents, and it is this time factor with which we are chiefly concerned in radio circuits. *The time factor is the frequency or rate of change of a current per unit of time under an applied alternating electromotive force.*

In the following paragraphs we will associate the foregoing facts with a discussion on practical applications, and from this viewpoint the reader will appreciate the importance of the factors which govern a-c. circuit requirements.

Tuning.—When an operator varies the capacity of a condenser or changes the number of turns used on a coil, the process is called *tuning*, as mentioned heretofore. Tuning is the name given to the method for regulating the circuit reactances.

The frequency of an a-c. circuit composed of inductance and capacity should be so regulated that at the instant the voltage reaches its peak value the current flowing will have produced considerable energy in the form of the magnetic field around the inductance. Furthermore, the current flowing in the circuit at the designated frequency should build up a maximum value of e.m.f. in the condenser.

The conditions just mentioned are ideal and they are very nearly approached in an efficient alternating current circuit. The more nearly the reactance of the circuit may be made to equal zero, thus canceling this opposition, the larger will become the amplitudes of the alternations of current. Then, the only retarding effect upon the current flow will be the ohmic resistance, but although the latter is always present to some extent, it can be kept down to a minimum value.

After following all of the considerations heretofore mentioned it is perfectly obvious that alternating current circuits, employing the use of both inductance and capacity, are operated on as low a reactance as is possible.

We find that there are in use two principal types of circuits: the tuned circuit and the untuned circuit. Tuning, by an adjustment which causes a change in the amount of inductance, either by an increase or by a decrease in the number of turns used on a coil, is the process by which the inductance is being balanced against a fixed capacity reactance. Tuning may be accomplished through a change of capacity, by interchanging or combining in various ways fixed condensers of different sizes or by rotation of the movable plates of a variable condenser in and out of effective relationship with the station-

ary (stator) plates. The variation of capacity will balance the capacity reactance against the inductive reactance when the latter is a fixed circuit condition. During the process of tuning, what we are actually doing is endeavoring to establish a point of resonance by creating a condition of zero reactance for a given frequency in the circuit.

Summing up in one short paragraph: A circuit is in resonance with a given frequency of e.m.f. when that circuit shows no reactance for the currents that flow at the given frequency, in other words, when the highest possible current strength will flow in the particular circuit at the given frequency.

(1) **A tuned circuit** is used when the frequency of the e.m.f. applied to the circuit is not under the control of the operator, as shown in Fig. 220. Provision must then be made whereby the inductance and the capacity of the circuit may be varied to place the circuit in resonance with the impressed frequency. For instance, in a radio receiving set, the radio-frequency circuits are tuned to receive maximum current from various transmitting stations whose signals are desired, and are being transmitted at different frequencies. In transmitters the tuned circuits are those which control the frequency of the transmitted wave.

(2) **An untuned circuit** is used where a known frequency of e.m.f. is always impressed upon the circuit. In this case, the values of inductance and capacity required may be predetermined and they become fixed circuit conditions. It must be remembered that an untuned circuit may be either critical or broad in its design. In the untuned intermediate-frequency circuits, for instance, is the super-heterodyne receiver, as shown in Fig. 202, which may be used for the illustration of a critical circuit, because it offers a low reactance to the currents flowing at the given intermediate-frequency, but considerable reactance to all other frequencies of current for which that particular circuit is not resonant. For example, the transformer used may be *peaked* at 45,000 cycles, passing only a narrow band of frequencies to include the audio-frequency range.

Many of the radio broadcast receiving circuits employ a small coil of fixed inductance or resistance inserted in the antenna circuit with no provision made to tune the antenna circuit. This input circuit is considered broad in its design because the reactance of the small inductance will not oppose frequencies in the broadcast range or between 545 and 1500 kilocycles that are impinged upon the receiving antenna. It is evident, therefore, that this small coil acts merely as a *pick-up circuit* to absorb the initial energy from all stations for delivery to the grid of the first tube in the receiver which is known as a coupling tube.

In an untuned antenna circuit of this type the signals not desired

are then discriminated against in the tuned circuits which follow the coupling tube, so that only the signals emanating from the broadcast station whose program is wanted pass through the balance of the receiver. The antenna coil in the above case should offer low reactance for the broadcast frequencies, and its inductance value should be small. Such coils may consist of only a few turns of wire, perhaps eight or nine turns wound on tubing of small diameter, from two to four inches, or a high resistance may be used, as previously explained.

(3) One of the practical examples of an untuned circuit is found in the electrical power equipment designed to operate on alternating current of a known low frequency obtained from the lighting socket. All alternating current apparatus carries a name plate attached upon which the manufacturer stamps the frequency and voltage that must be supplied to the device for efficient performance. In some parts of the country, 60 cycles is the standard frequency for light, heat and power, while in other locations, 25 cycles is the standard frequency. A 60-cycle device should never be connected in a 25-cycle a-c. power line or vice versa.

A summation of the foregoing facts illustrates, in a practical as well as a theoretical way, the principles in alternating current circuits. Although the inductance, capacity and resistance of a circuit are not material things, they are all expressions used to describe the effects which relate to the physical parts or devices that make up an electric circuit. Each effect has a definite or fixed value, measured respectively in the units of a henry, a farad (microfarad) and the ohm. The total effects which inductance, capacity and resistance produce upon a circuit, that is, the reactance and resistance combined together, are called *impedance* and they are seen to be influenced almost entirely by the frequency of the alternating voltages which are impressed upon the circuit.

A good understanding of the effects upon a circuit when the frequency changes is of great importance. Whenever the frequency of the impressed e.m.f. is altered, the amounts of either the inductance or capacity, or both inductance and capacity, must be varied to obtain a new set of conditions for balancing the reactances set up by the inductance and the condenser used in the circuit.

The following expression illustrates the condition of resonance:

$$2\pi fL = \frac{1}{2\pi fC},$$

where $2\pi fL$ = inductive reactance,

and $\dfrac{1}{2\pi fC}$ = capacitive reactance.

Resistance and Its Damping Effect upon Oscillations. Simple Analogy.—We do not find the quantity *resistance* included in the usual formulas relating to resonance for the reason that the resistance of an oscillatory circuit is usually very low. This is because the inductances (coils) used in radio-frequency circuits consist of only a very few turns of wire and the connecting leads are relatively short. In cases where large power is handled the wires which form the conducting part of the circuit are of copper tubing or flat ribbon wire. The phenomenon produced by high frequencies flowing through conductors and known as *skin effect* also influences the amount of energy carried in the circuit as well as the ordinary resistance of the wires. We are not concerned in the phenomenon of skin effect in this particular discussion.

If the resistance of an oscillatory circuit is beyond a certain critical value, it will cause a rapid stopping of the oscillations, which is called *damping*. The oscillating current falls off in amplitude strength, and the energy formerly existing in the circuit is gradually extracted from it by the effects produced upon the oscillations by the resistance, or is consumed in form of heat.

The following simple analogy will make this point clear. Most of us, at some time or other, have watched a musician play the 'cello, an instrument constructed along the lines of a violin, only much larger. When the bow is drawn across the strings they vibrate and produce a musical tone. Each string, after it has been acted upon by the bow, gradually comes to rest; its effort has been expended, and the sound from that particular string gradually becomes weaker and weaker until all of the energy in the string has been spent.

We have observed that at times the musician places his finger upon a string in order to bring its vibrations to a sudden stop. No matter how much pressure is applied by the hand to a large string in a vibratory state, it will not come to rest immediately. In the first case cited, the string subsided naturally, that is, the damping of the string motion was gradual, but in the latter case when the musician brought pressure to bear upon the string, the damping was faster, the string ceasing to vibrate more quickly.

The same condition occurs in an oscillatory circuit. If the circuit is adjusted to the proper frequency to begin with, the radio current will oscillate freely through the circuit and will not be greatly influenced by the resistance, provided the resistance of the circuit is less than a certain critical value. On the other hand, if the resistance of the conductors is high, or if high resistances are formed at terminal connections, it means that the electrical vibrations or oscillations will not flow freely at their own natural period, but will rapidly diminish in strength.

The increase of the resistance in the electrical circuit has acted as a *damping effect* which stops the oscillations quickly and is analogous to the 'cello string when brought to rest suddenly by the pressure of the finger.

If the resistance in a circuit is excessively high, the circuit ceases to be oscillatory, and is then *aperiodic*, which means that current flows through only once for each application of e.m.f. to the circuit from some source. The series of oscillations generated by the discharge of a condenser through an inductance are called *free oscillations.*

The Oscillograph.—The oscillograph shown in Fig. 267 is an instrument that will give a record of the occurrences within an electrical circuit which are invisible to the eye and the varying energies of which are too rapid in their movements for indication by ordinary recording devices. The practicability of the oscillograph (oscillogram) lies in the fact that the electrical happenings in a circuit are pictorially recorded, so that the results obtained may be interpreted by those engaged in electrical pursuits, the recordings being like a universal language, intelligible to all.

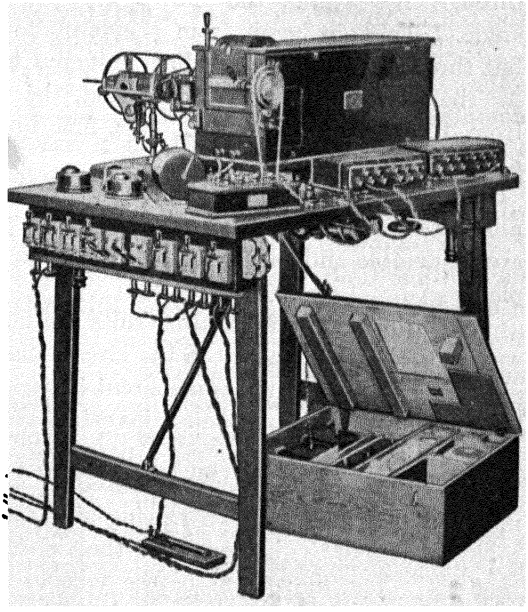

FIG. 267.—A photograph of an oscillograph manufactured by the General Electric Company.

The essential parts of the oscillograph are a high period galvanometer and an optical system for transmitting beams of light from a lamp to mirrors on the galvanometer vibrating elements, thence to a moving film or to a screen whereby the actions within are made visible to the eye. A mechanically controlled shutter opens and closes, allowing beams of light to be directed toward the film for a single revolution of the drum carrying the film.

The photographic and tracing features are combined by the employment of a compact form of the vibrating loop type of galvanometer. The small vibrators have a very short free period of vibration, for the

free motion of a vibrator just ceases to be oscillatory at a critical point. Or, it could also be said that the damping of the vibrator is critical and short as compared to the rapid wave motions of electrical energy which the instrument is capable of recording.

The vibrators or moving elements consist of loops of flat wire with their two sides very close together in a strong magnetic field. A small mirror is cemented across the two wires of each loop with its face in a plane parallel with the magnetic lines of force. Small spiral springs, in the form of spring balances, hold the loops at a tension. One of the loops moves forward and backward when a changing current flows through it, causing the mirror to be deflected through a certain angle. The light beam from the lamp is reflected from the mirror, but through a wide angle, which enlarges the effects of the moving coil. As the current reverses in the coil, the beam of light is deflected from its normal position of rest, first in one direction, then in the other.

In order to locate the light spots caused by the beams from the moving mirror exactly where desired on the plate or screen, the vibrators are adjustable and may be moved either in a vertical or in a horizontal plane.

When extremely accurate results are not required, a tracing of the waves or electrical energy in the circuit may be had by placing a piece of tracing cloth over the transparent table. The electrical phenomenon in the circuit which is being investigated will appear as continuous bands of light, thus providing a permanent record.

The vibrating mirror is operated in synchronism with the waves under investigation when a tracing of a stationary wave on the tracing table is desired. The speed of the driving motor is regulated by a rheostat. The movement of the vibrator mirror causes its beams to strike the synchronous mirror as the latter, at the same time, is moving back and forth. The combination gives the amplitude of the wave from side to side and its complete wave form.

A photographic record may be obtained when using a cylindrical lens and an electromagnetically operated shutter with two controls, allowing one to open at the beginning of the photographic film and the other to open it instantaneously. High-frequency current or waves having transient values are not under control. The instantaneous operation of the shutter regulates the photographic timing of the phenomenon which is being investigated. The reflected beams of light are properly focused on the film and appear as in the oscillogram of Fig. 268. A small motor drives a drum carrying the film, thus moving the film past a slot which is held open only when an exposure is to be made.

An arc lamp is used as a source of light and gives an intense beam which is suitable for recording the rapidly changing phenomenon.

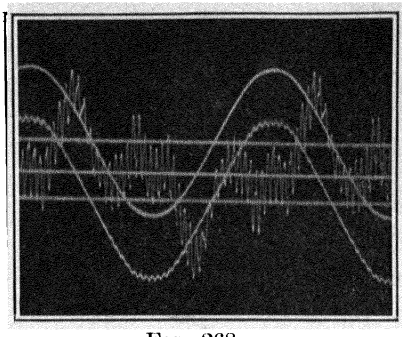

FIG. 268.

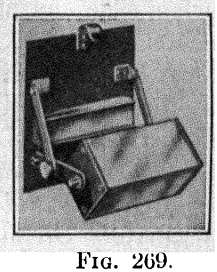

FIG. 269.

FIG. 268.—This oscillogram depicts the simultaneous record of three wave forms. The amplitudes and phase relations are easily discernible.

FIG. 269.—Oscillograph curves may be viewed with this mirror.

A means of viewing a wave is furnished by the mirror shown in Fig. 269. For this purpose a low voltage incandescent lamp is used. When the oscillograph is not used for visual purposes, slow speed photo-

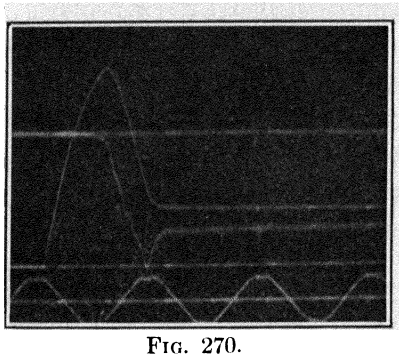

FIG. 270.

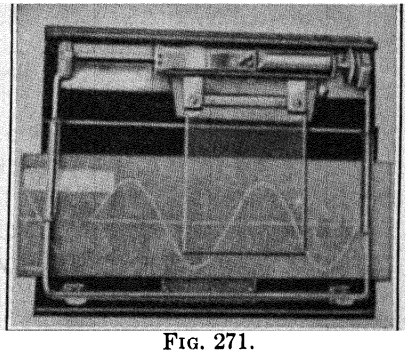

FIG. 271.

FIG. 270.—How an oscillogram permits the timing of circuit breaker operation to be visualized.

FIG. 271.—The wave micrometer of an oscillograph.

graphic records may be obtained by employing the low voltage lamp, but this lamp is unsuited for high frequency recordings.

The oscillograms pictured in Figs. 268, 270, 271 and 272 clearly show that not only will the true shape of the wave be given, but an accurate

comparison of the instantaneous values of either voltage or current and phase relations is obtained. The wave shape of the output energy of a generator is shown in Fig. 272.

The oscillograph consists of the following: A galvanometer, three vibrators, optical system, electromagnetic shutter and shutter control, ground-glass slide and film holders, tracing table, synchronous mirror and synchronous motor.

How an Electrical Circuit Oscillates, or Transient Phenomenon.—Examine the oscillograms in Fig. 268. They show how a transient value is recorded.

The small circuit diagram in view 1, Fig. 273, indicates the oscillatory circuit consisting of inductance L and capacity C. The resistance of the oscillatory circuit may be considered negligible because of the short connecting leads and the few turns of wire which form the radio-frequency inductance L. This circuit diagram shows condenser C

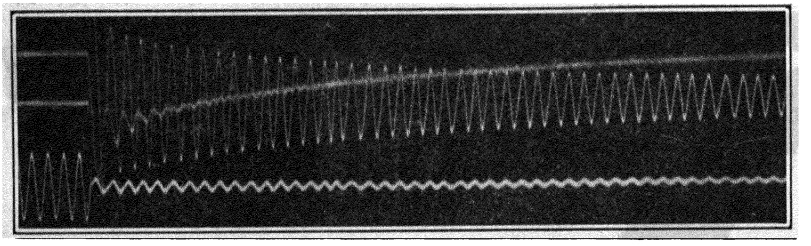

FIG. 272.—An oscillogram showing field current, line current and line voltage of an alternator.

being charged by one alternation of induced electromotive force from the secondary of the transformer. Let us suppose that we can, by some means, detach circuit LC from the charging source the instant that condenser C receives a maximum voltage, or at the peak of the alternation. The transformer circuit is now removed, having been used merely to explain how the condenser receives its initial charge.

The electrostatic charge in C is marked with small lines and the potential difference across the dielectric, or between the condenser plates, is marked by the polarity signs positive + and negative −, as in view 2.

View 2.—The conditions under which we begin the explanation are graphically illustrated with the fully charged condenser connected to inductance L, consisting of a few turns of wire, perhaps, let us say, twenty-five turns.

View 3.—Condenser C begins to discharge, and supplies voltage or

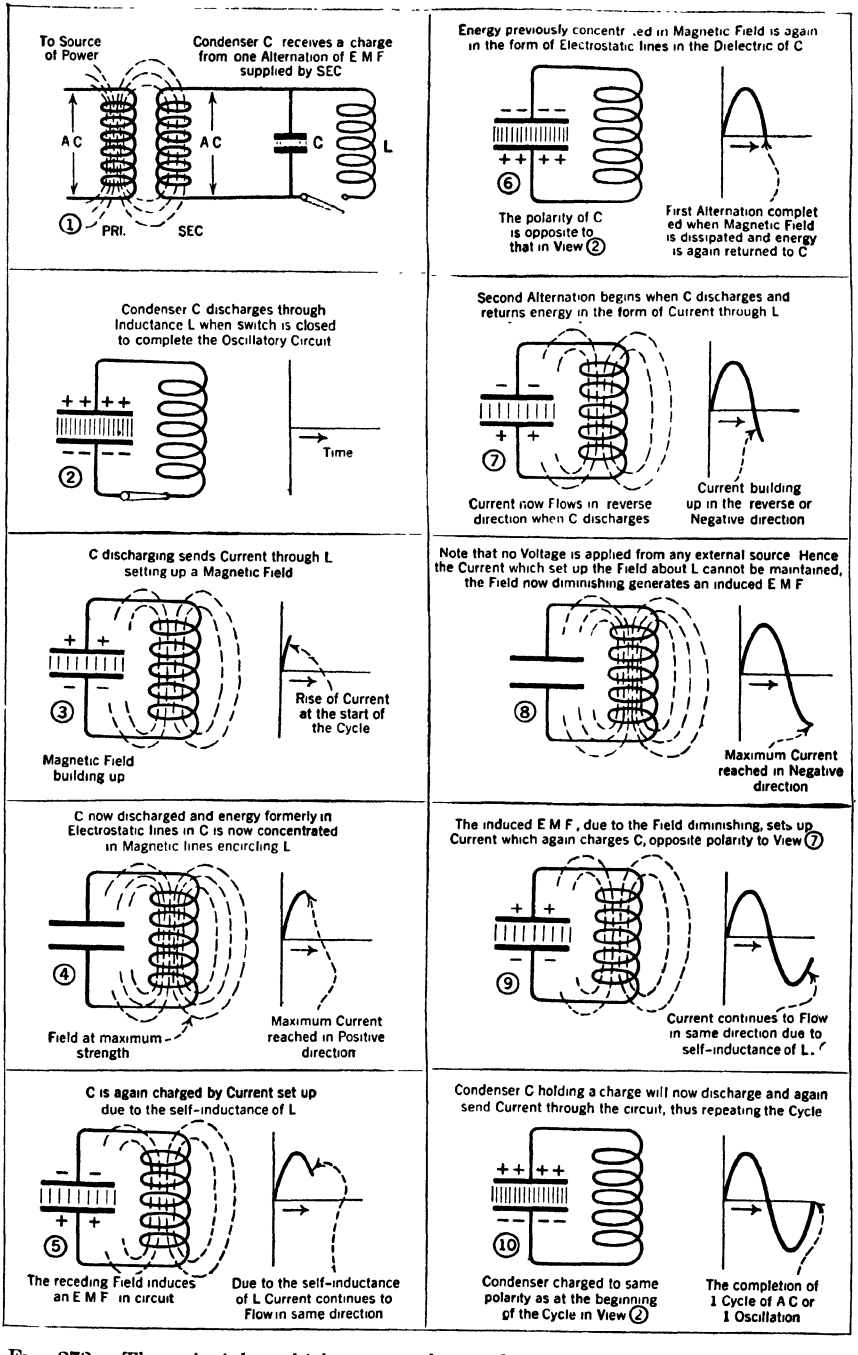

FIG. 273.—The principles which govern the production of radio-frequency current in an oscillatory circuit by the discharge of a condenser through an inductance

e.m.f. to the circuit. All charged condensers are held under a strain and seek to relieve the tension within immediately. The discharge voltage causes a flow of current to pass through the circuit in the direction from + to −. While current increases through L, the magnetic lines of force produced by the current build up outward from the coil, and in threading their way through the turns induce an e.m.f. in the circuit which is counter to the condenser voltage. The counter voltage slows up the condenser current and represents the effect of the self-inductance of L (inductive reactance) in tending to prevent the current rise. This view shows part of the energy formerly in the condenser now in the form of a magnetic field. The line on the graph to the right illustrates this current rise.

The condenser continues discharging until the potential difference between its plates is equalized. When this happens, almost all of the energy previously in the electrostatic field will be in the form of an electromagnetic field surrounding L as shown in view 4.

View 4.—The magnetic field has now reached its maximum density, which is indicated by the lines of force encircling L. The increase in the current flow up to this moment is shown by the height of the current curve.

View 5.—The condenser (in view 4) having given up its stored energy cannot now furnish additional voltage and current. As a consequence the magnetic field around L instantly begins to recede, or dissipate, inward toward L. This action of the magnetic flux cutting back on the turns of L induces an e.m.f. in the same direction as the inducing current furnished by the original discharge voltage of the condenser. This new e.m.f., generated by the changing magnetic lines of force, produces a current flow in the direction from + to −. In other words, the self-inductance of L perpetuates the current, thus tending to prevent any change in current value.

The current flowing toward the condenser charges its dielectric, as indicated by the polarity signs. It will be noticed that the voltage across the condenser is now opposite in polarity to the initial charge it received from the transformer, as in view 2. Also, the condenser develops a counter voltage, or reactance voltage, as the charge in it builds up. This reactance voltage is the effect or opposition which the condenser presents when being charged, and it slows up the charging current or rate of flow. Hence, it requires a definite length of time to build up the magnetic field around L and also to charge condenser C to maximum voltage. This is how the element of time enters into this sequence of energy changes and will determine the frequency, or rate, of these occurrences. The energy originally in the circuit is divided (at

this particular moment) into that part in the magnetic field and that portion in the electrostatic field. It must be remembered, however, that some losses are incurred because of the transient movement of energy. Consequently, the charge now in C will be somewhat lower in value than when C was first charged as in view 2.

View 6.—When all of the magnetic energy around L is spent, the induced e.m.f. will be discontinued and current will cease to flow toward condenser C. This condition is illustrated in this view, which shows the field around L depleted and maximum charge in C of opposite polarity to C as in view 2. The curved line on the graph to the right in view 6 shows how the current rises and falls in value as it flows in one direction through the circuit, due to the condenser discharging through the inductance. This movement of current is called an alternation, and arbitrarily it may be called a *positive alternation.*

View 7. A second alternation will now occur, but in the opposite direction, which in this case is called a negative direction. The action and reaction of the condenser and inductance will be exactly similar to the first alternation. A description of the second alternation follows. Condenser C, which is charged as in view 6, will now seek to equalize the potential difference between its plates and will begin to discharge through L. Current will flow, but in a direction opposite to the current in the first alternation, as described above. The direction of flow is from positive to negative in view 7. Notice that the curve at the right is now extended below the horizontal line or zero axis, thus indicating the reversal of current now occurring. The distance along the zero axis from the start of the curve to its end denotes the time required for the electrical action up to this instant from the start of operations as in view 2.

While the discharge current of C rises through L, the reactance voltage generated by L, due to the flux changing around L, slows up or retards the current increase. This reaction of L which opposes a change in current strength is called its *inductive reactance.* However, the condenser continues discharging until no potential difference exists between its plates. While the e.m.f. of C is decreasing the current through L is increasing.

View 8.—When the voltage in condenser C falls to zero, the flux around L is maximum, but this magnetic field cannot be maintained without current. Consequently the lines of force immediately begin to recede or fall back on L, inducing within the coil and circuit an e.m.f. in the same direction as the e.m.f. just furnished by the condenser. The curve at the right shows the current at maximum value in a negative direction. This view represents the magnetic field having

reached its greatest proportions or density, also that the current has stopped flowing from the condenser.

View 9.—In this view the flux around L diminishing in magnitude is shown by the fewer number of lines and the induced e.m.f. caused by this change in magnetic field strength will set up a flow of current. The direction of the induced current coincides with or aids the original current flow which created the field, as in view 7. The condenser in view 9 is now charging to the same polarity as originally was given to it by the transformer, as in view 2. The curve at the right in view 9 indicates the current flowing to the condenser, due to the voltage generated by the diminishing lines of force about L.

View 10.—This view illustrates the complete dissipation of the flux around L and the energy formerly in the circuit as a magnetic field, view 8, now converted into electrostatic form. Condenser C being charged to full voltage will immediately discharge according to the explanations covering all the views, in other words another cycle of alternating current (not shown by a curve on this graph) will be generated by the combination of the condenser discharging into the inductance and in turn the energy possessed by the magnetic field encircling the inductance inducing current which in turn charges the condenser.

The current or sine curve in view 10 shows the completion of the second alternation, which is called the negative alternation, since we arbitrarily named the first alternation a positive one. The distance along the zero axis from the beginning of the curve to its completion indicates the time occupied in the transference of energy back and forth through the circuit and is known as the *time period*, or the time required to complete one cycle of alternating energy. The sine curve is a diagrammatic illustration of a change in electrical energy with relation to time. The instantaneous values indicated by the varying height of the curve above and below the horizontal line (or the amplitudes) represent the increasing and decreasing strength of the current, and the distance along the horizontal line indicates the progress of time, as we have just mentioned. The sine curve shows how the current undergoes a complete reversal in direction, as well as in strength, as it flows from one side of the condenser to the other side. This sequence of voltage and current changes will persist as long as the condenser holds any charge or as long as any flux exists about the coil.

Due to the slight dissipation of energy in each cycle, the amplitudes of successive alternations will be weaker than preceding ones and will gradually lower in height until the oscillating energy actually dies out. This is technically called *damping*.

There is a discontinuance of energy in the circuit, causing oscilla-

tions to cease, only when no charge remains in the condenser, or when finally no magnetic field exists about the inductance as just mentioned. Hence, a gradually diminishing series of oscillations called a wave train of *damped* or *discontinuous* oscillations such as would be generated by the discharge of a condenser through an inductance would appear as depicted in the curve of Fig. 299.

It should now be understood how the opposite reactions of inductance and capacity facilitate the production of an alternating current, with the frequency or rate of movement back and forth through the circuit, controlled by the amount of capacitance used and the amount of inductance used. When a cycle of alternating current flows with great rapidity it is called an *oscillation*.

The actual voltage in C at the completion of the cycle will be somewhat less than the initial voltage in C when first charged by the transformer, due to natural losses whenever electrical energy is transformed from one kind to another, or as in this case from electrostatic into electromagnetic and vice versa.

A condenser in an oscillatory circuit is charged and discharged with great rapidity, hundreds of thousands of times per second and upward, in the vicinity of millions of times, depending upon the frequency, and consequently a considerable amount of work is accomplished. This work results in the expenditure of energy in different forms, heat due to dielectric hysteresis, brush discharge, dielectric adsorption, and so on. There is also a slight dissipation of energy in heat due to the resistance of the circuit, as well as losses occuring when current passes through the inductance and sets up a magnetic strain in the media surrounding the turns of wire. Other sections of this text treat more fully the circuit elements and losses.

Summary.—A synopsis of the oscillatory action or the production of transient energy in an electrical circuit consisting of inductance and capacity follows:

Starting with view 3, the condenser begins to discharge, gathering strength as it progresses. This discharge is a flow of electrons (conduction current) through inductance L. When the voltage across the condenser is reduced to zero, it means that the condenser plates have an equal balance of electrons and that the displacement current in the dielectric stops flowing.

The discharge current passing through L sets up a large magnetic field encircling its winding. When the current stops increasing, which it must do when C is completely discharged, the lines of force about L recede, or diminish in magnitude. This change in their number induces an e.m.f. in the circuit which continues the current flow in the original

direction, but of a steadily decreasing value. This continuance of current charges C at the end of the first alternation, as indicated by reversing the potential signs negative and positive, as shown in view 5.

Condenser C now gives up its stored energy and discharges, thus applying its voltage to the circuit to produce another flow of current. The sequence of current and voltage changes is similar to that during the first alternation, but the changes occur in the opposite direction.

The major point to be brought out in this explanation is that when a circuit is oscillatory the changing magnetic energy stored in an inductance sets up a current in the same direction as the inducing current (from the condenser) which produced the field.

The release of electrostatic energy stored in the condenser supplies the circuit with voltage, or e.m.f., thus providing the inducing current referred to in the previous paragraph. The inductance in the circuit will delay the reversal of current; that is, it will cause any variation of current to lag behind the voltage which produces it. On the other hand, the reversal of current is assisted by the capacitance of the circuit, for, in this case, the discharge of the condenser causes a leading current, or one that is ahead of the voltage which produces it.

The frequency of the oscillatory current is another means for expressing how fast or slow the currents increase and decrease through the inductance and the length of time required for the current to build up a charge in the condenser. Hence a large coil, or one having a high inductance, will create a strong field and increase the value of its reactance voltage, thus exerting a *choking* effect upon the inducing current passing through it. In the case of the condenser, one of low capacitance is capable of being charged faster than one of higher capacitance; hence its reactance voltage builds up quickly, thus facilitating the movement of current in the circuit. Therefore it is reasonable to expect that an oscillatory circuit, consisting of both an inductance and capacitor of low values, will be highly responsive to radio-frequency currents and vice versa.

The foregoing explanation is equally true of an antenna system consisting of tuning inductances and loading inductances and capacitance in the antenna. It is known that the capacitance of the antenna is not concentrated, as in the case of a condenser; but if a condenser element is inserted in series with a given antenna system, the condenser will have the effect of increasing the frequency of the circuit. That is, there will be a lowering of the wavelength, because condensers connected in series always lower the resultant capacitance of a circuit to a value less than that of the smallest capacitor in the circuit. See explanations under the caption "Condensers in Series Combination."

This relation of frequency, capacity, and inductance in an oscillatory circuit having negligible resistance, may be interpreted in the following well-known " frequency " formula:

$$f = \frac{1}{2\pi\sqrt{LC}}$$

Where f = frequency in cycles per second;
L = inductance of the circuit in henrys;
C = capacitance of the circuit in farads.

CHAPTER XVIII

ANTENNAS—AERIALS

Antenna or Aerial.—A complete antenna system consists of the elevated antenna conductors, the ground conductor furnishing the earth connection, and all tuning apparatus, including coils and condensers, which may be included between antenna and ground, the whole forming a closed circuit or direct path from antenna to ground.

The antenna, or aerial, is that portion of the complete circuit composed of one, or several, conducting wires suspended above the ground and insulated from all surrounding objects, as shown in Fig. 274.

The purpose of the antenna is to facilitate the radiation of energy in the form of electromagnetic waves when connected to transmitting apparatus, or when connected to receiving apparatus its function is to absorb part of the energy radiated by the distant transmitter. Some of the high powered stations employ two antennas, one for transmitting and one for receiving, which may be located some distance apart.

On shipboard there may not be sufficient room to suspend two independent antennas, and the lead-in wire is brought to a transfer switch connecting the same antenna system either to the transmitter or the receiver.

A vertical wire suspended in the air is the simplest form of antenna. It was first used by Hertz in his early experiments and this type is still known as the " Hertz antenna." Later, Marconi conceived the idea of connecting the antenna to the earth in order to increase the communication distance. An antenna system with ground connection is therefore identified as the " Marconi " type to differentiate it from the " Hertz " type. The latter type is rapidly displacing the " Marconi " type for short wave transmission.

The conductors used for the exposed portions of an antenna system usually consist of several strands of silicon bronze wire, an alloy of copper. The alloy is either of copper and silicon alone, or copper, silicon and tin. It possesses great tensile strength and good conductivity. In the very heavy type a tarred marlin rope may be used as a core upon which the strands of wire are wound to give added strength.

The majority of antennas have a flat top portion which extends horizontally to a distance varying from 40 to 6000 ft., the length depending upon the use to which the antenna is to be put, whether land or

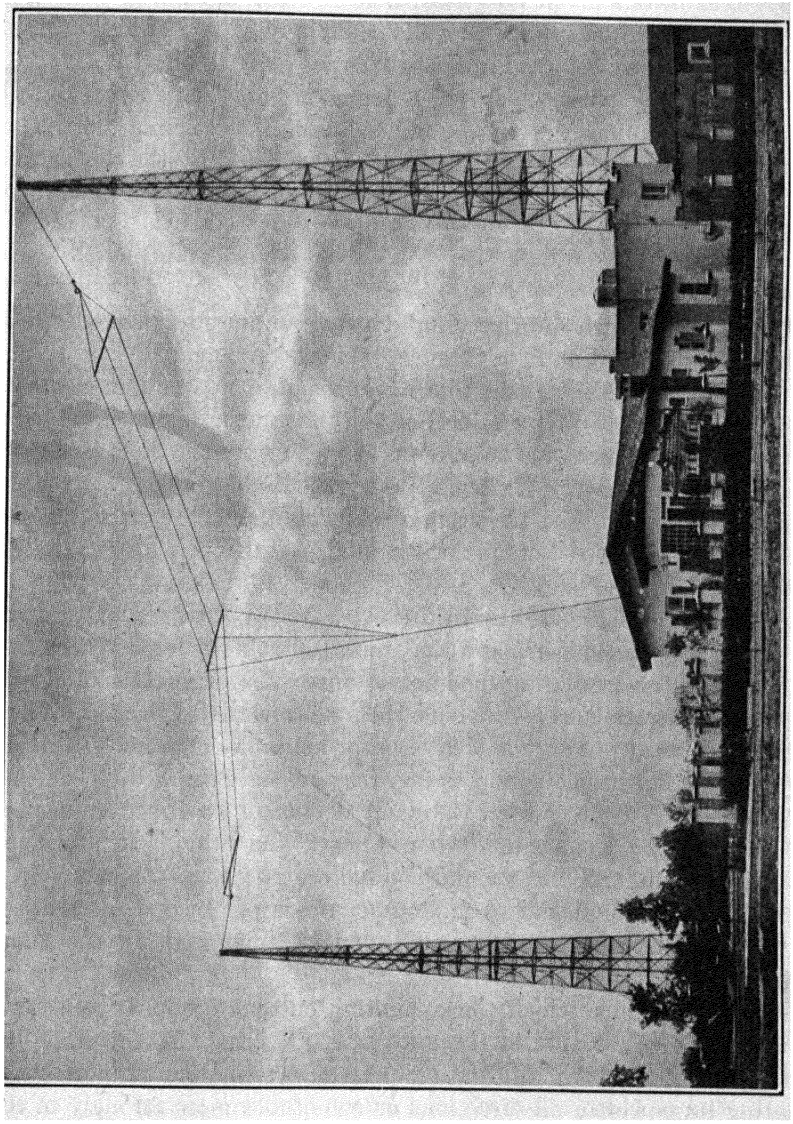

FIG. 274.—Illustrating "T" type antenna and supporting towers.

ship installation, or to the power of the station. Present-day ships use either a 2, 3 or 4-wire flat-top antenna, the wires being connected in parallel, spaced from $2\frac{1}{2}$ to 3 ft. apart.

All types of antennas do not radiate with equal intensity in all directions. A certain type known as a *unilateral antenna* will have distinctly directive characteristics and will radiate a larger proportion of radio waves in one given direction than in other directions. Another type, the *bi-lateral antenna*, will radiate strongly in two opposite directions, or in regions 180 deg. apart.

The efficiency with which an antenna radiates its energy cannot always be determined by the actual value of the antenna current as indicated on the ammeter, but is somewhat affected by the design and location of the antenna. The dimensions of an antenna are governed:

(1) By the length of the wave to be radiated.
(2) By the space available for erection.

It has been shown in other chapters that an antenna possesses both distributed capacity and inductance, which, combined, give it a definite period of oscillation, called its *fundamental wave*, when an electrical charge is applied to it by means of suitable transmitting equipment. The oscillating current in the antenna circuit creates an electrical pressure of from a few volts to about twenty thousand or more, depending upon the power between the ground when used as one conducting surface and the elevated antenna wires used as the opposite conducting surface.

An electrical field is set up in the space separating the free, or open, end of the suspended wires and the ground, by this difference of potential, because the insulating medium or space has properties similar to those of a dielectric and is capable of being electrically charged. Whenever an electrical pressure is created in or across a dielectric substance, the dielectric substance is said to be *electrostatically* charged. The electrical pressure, or static force, is made to change its direction, applied first toward one surface and then toward the other. It alternates between the antenna and ground conductors at a high frequency from several hundred thousand to millions of times per second, determined by the radio-frequency alternating currents generated by the transmitter.

This disturbance which the oscillating current produces causes the electric field set up around the antenna to alternate at the same frequency, which starts an alternating electric wave motion through space, radiating its power in all directions or sometimes more strongly in certain directions depending upon the design of antenna structure. The wave motion is thought to be made up of a *horizontal wave component* and a *vertical component*.

From any system of wires in which high-frequency oscillating cur-

rent flows there are radiated electromagnetic waves, having electric and magnetic components, the wavelength of which is related to the inductance and capacity of the antenna system in the following manner:

When the capacity C is measured in the units of a farad and the inductance L in henrys, the fundamental length of the wave in meters, being the distance between two successive antinodes of the alternating wave motion, will be equal to

$$4 \times V \times L \times C$$

where V = the velocity of the electromagnetic waves, which is 299,820,000 meters per second. The velocity of radio waves is generally expressed, however, in round numbers as 300,000,000 meters per second.

Scientists, by different methods, have measured the length of certain radiations of light waves in terms which they consider to be authentic. These measurements are referred to in the " International Prototype Meter " with this result: 1 Meter = 1,553,164.13 light waves. Accordingly, radio waves may be calculated in terms of a meter. An inch, in the United States, is defined as 1/39.37 meters; hence, a meter equals 39.37 inches.

The meter is the fundamental unit of length in the metric system. As used for the measurement of wavelength in radio it indicates the distance of space covered by one cycle, or one complete alternating wave motion of transmitted radio energy.

In the fundamental expression given above for wavelength, it should be clear that both distance and time are represented by the factor designated V (velocity). Velocity is the rate of motion and must not be confused with the actual distance a radio signal may travel from its source to be picked up and made audible in a distant receiver.

The length of the radiated wave can be increased artificially by increasing the inductance of the antenna. This may be accomplished by inserting a coil of wire, called an *antenna tuning inductance*, at the base of the antenna, or the wavelength may be decreased by connecting a condenser in series with the antenna at the base. But experience indicates that there are definite limitations to which we may load an antenna system with inductance or capacity to effect a change of wavelength. When an inductance (coil) is connected at the base of the antenna, it is called *concentrated or lumped inductance*, and we can no longer use the simple formula given previously for determining the length of the wave, but it must be modified and expressed as follows:

$$(\lambda) \text{ wavelength} = 1884\sqrt{LC}$$

where L = inductance in microhenrys
and C = capacity in microfarads.

Although in this formula the velocity V does not appear as a literal factor, yet it is represented by the numerical factor 1884, which will be readily understood if reference is made to the derivation of this formula, given in another chapter. This formula probably is the one most frequently used to express wavelength.

It is not advisable to load an antenna with inductance to radiate a wave more than four times the natural wavelength, because the insertion of greater amounts of inductance will increase the reactance and reduce the flow of current, thereby decreasing the range of the transmitter. It would be advisable to construct the aerial proper of greater dimensions.

The *fundamental or natural frequency* of an antenna is its lowest resonant frequency produced by its own inductance and capacity, that is, when unloaded. Unloaded means without any added (concentrated) inductance or capacity for tuning purposes.

An antenna radiates most efficiently at or near its *fundamental wave.* The use of a small amount of localized inductance in the form of a secondary coil of a radio-frequency transformer is necessary, however, in order to couple the antenna to the high frequency power supply to excite the antenna, thus setting it into oscillation. The addition of the inductance does not add to the energy of the oscillations, and, when large amounts of loading inductance are inserted, the decrement of the oscillations is decreased, because of the added self-inductance of the antenna system.

In a spark transmitter the addition of inductance in the antenna up to a certain point may be favorable to the tuning qualities of the radiated wave, depending upon the decrement, that is, whether the characteristic of the wave is broad or sharp, as defined by the government regulations.

As previously stated, a small amount of inductance is necessary at the base of the transmitting antenna to act as the secondary winding of the radio-frequency transformer to receive energy from the primary closed circuit in order to set the antenna into excitation. In all cases where the inductance of the antenna is increased because of this fact, unless the capacity of the antenna is also increased, the flow of current will be reduced considerably. Hence, to permit the insertion of the secondary inductance, the antenna dimensions should restrict or limit its natural wavelength to less than the length of the radiated wave.

For example, a certain antenna may be designed to operate on 300

meters. It has a natural wavelength of 275 meters, when unloaded or without concentrated inductance. The inductance of the loading coil must be able to raise the wavelength up to the assigned 300 meters. When a transmitter is designed to operate on more than one wavelength a wave changing switch offers a means of varying the inductance according to the number of turns of wire required in the loading coils for the different wavelengths.

If the physical height of the antenna is increased, both the distributed inductance and capacity will be increased, and also the length of the radiated wave. If, after erection, the antenna is found to be too long for a given wave, either the length of the antenna can be reduced or the length of the wave can be artificially reduced by means of a *series condenser.* A greater increase of antenna current will be secured if it is possible to obtain the required wave without the use of a series condenser.

The determination of the wavelength from the dimensions of an antenna by the use of formulas is usually too complicated for the practical worker, but the following data will convey an approximate idea of the relations of wavelength and the size of an antenna.

The total length of the antenna is measured from the extreme elevated end down to the apparatus at the transmitter. For an antenna system comprising four horizontal wires spaced about $2\frac{1}{2}$ ft. apart, the natural wavelength will be approximately 4.4 to 4.8 times the total length of the antenna in meters. In a " T," or umbrella type, it will be about five times.

The natural wavelength of a 4-wire horizontal antenna is not much greater than that of a 2-wire antenna with equivalent spacing, because while the capacity is always slightly increased by the addition of wires, the total inductance of the whole system is also decreased, and these factors nearly offset each other. If the spacing between the conductors of an antenna is gradually increased, the capacity is also increased, and the total inductance is somewhat decreased, due to the diminishing of the mutual inductance between the adjacent wires. The increase of capacity, however, will exceed the decrease of inductance, and the natural wavelength will be increased considerably. When the distance between adjacent wires does not exceed 3 ft. they may be said to be *mutually inductive.*

Measurement of Antenna Inductance and Capacity by Substitution Method.—The inductance and capacity of an antenna may be calculated with approximate accuracy for practical purposes by employing the formula for wavelength, $1884\sqrt{LC}$, and substituting known values of inductance and wavelength found by experiment. The equipment

necessary is a wave meter and two inductances known as " standards " of inductance.

The procedure is to excite the antenna from a source of oscillations, as for instance the primary or closed oscillatory circuit, and tune the antenna to resonance as indicated when the highest reading on the antenna ammeter is secured. Two loading inductances L_a and L_b of different values, but inductance " standards," having been previously calibrated and of known values, are inserted in the antenna separately and the corresponding wavelengths λ_a and λ_b noted. Two simultaneous equations are thus obtained. The inductance L of the antenna may be found very easily by substituting these four known values in the following equation:

$$L = \frac{L_b\lambda_a^2 - L_a\lambda_b^2}{\lambda_b^2 - \lambda_a^2}$$

This expression is derived by solving for L when combining the two simple simultaneous equations and eliminating C.

After the value of the antenna inductance L is thus obtained it is substituted in the wavelength formula given above, which is modified somewhat, simply to include the antenna inductance proper, L, and the inductance of one of the loading coils, L_a or L_b, to give the total inductance of the antenna system; for instance $(L + L_b)$.

To obtain the capacity C of the antenna the known values λ_b, L, and L_b are then substituted in the modified formula:

$$\lambda_b = 1884\sqrt{(L + L_b)C}$$

and this expression is solved to find C.

The Bureau of Standards Circular, " Radio Instruments and Measurements," gives many wavelength formulas and detailed treatment of measurements.

Types of Antennas.—Various types of antennas are:

(1) Vertical fan or harp antenna.
(2) Umbrella type antenna.
(3) Inverted L flat top antenna.
(4) T type antenna.
(5) Cage antenna.
(6) Hertz antenna (explained in "Short Wave" Chapter).

In any transmitting antenna installation, the following important points must be considered:

The conducting wires must be insulated thoroughly at all points of support and the insulators should not only possess high specific resistance

but should be capable of preventing high voltage current from discharging over their surfaces to any nearby metallic conductors. The voltage and current are not uniformly distributed in vertical antennas, for a much higher potential exists at the free or far end of the flat elevated portion than at the base. The matter of insulation at the free end is therefore of extreme importance; hence any supporting mast guys or other nearby conductors must be separated widely and insulated thoroughly from the antenna wires. Note that insulation of an antenna does not refer to any covering on the wire, a bare stranded wire being used.

If the insulation of an antenna is poor, it will affect the radiation and reduce the range considerably. The high frequency energy will leak over or through a broken-down insulator to the ground, representing a loss of energy. A leaking antenna insulator may be due to slight carbonization of the insulator, which may be removed by scraping the burned portion and covering it with a special insulating compound. An insulator which is burned beyond this remedy may be replaced by a temporary repair with a piece of marlin rope which has been soaked in oil. By decreasing the coupling at the oscillation transformer and by other methods previously described, the power input to the antenna may be reduced and excessive leakage at the insulators may sometimes be stopped. The range of the transmitted signal will be decreased, but communication may be carried on when otherwise it would not be possible. Whenever possible, all joints in antenna wires should be soldered to prevent losses of energy due to corrosion. An unsoldered joint permits corrosion to creep in and actually forms a high resistance connection between the two wires. This is particularly noticeable with receiving aerials where only very feeble currents are sometimes intercepted from a distant transmitting station.

Insulation Test.—The insulation of an antenna may be tested by inserting a spark gap in series with the antenna and then connecting the secondary of the power transformer across this open gap. The antenna circuit is set into excitation directly from the secondary windings of the high power alternating current transformer. If a spark discharge occurs at the gap, it is an indication that the antenna insulation is in good condition. If the antenna insulators leak either at the lead-in insulator or over the insulators of the antenna wire, the energy, instead of discharging across the spark gap, will leak across the insulators down the rigging, and then to the hull of the ship, which completes the ground side of the antenna system. It is seen that this path partially or completely short circuits the transformer, depending upon the seriousness of the insulation breakdown. The open spark gap should not be spaced more than $\frac{1}{8}$ in. for testing, because an insulator may offer no appre-

ciable leakage to a radio-frequency current such as is actually transmitted, but may break down completely under the strain of the low frequency, high voltage current of the power transformer. For instance, an antenna may be operated on a 600-meter wave, radiating high frequency energy at 500,000 cycles per second, whereas the test which we have suggested is performed with perhaps only a 500-cycle current.

The five general types of antennas that have been mentioned require more complete explanation, which is given as follows:

(1) The *harp* or *fan antenna* shown in Fig. 275 consists of a fan of copper or silicon bronze wires erected vertically in the same plane and supported at their free end by a wire connecting to two steel towers or wooden masts, or any structure providing sufficient height. The free end of each vertical conductor wire may or may not be soldered or electrically connected at the top to the supporting wire. However, all wires converge at the lower end and are connected to a single lead-in wire which passes through a heavy insulator where it enters the station house, being then connected to the apparatus, usually to a lightning switch and then directly to the transfer switch. The vertical antenna is an efficient radiator of electromagnetic waves, but due to the height required for its erection, and on account of the derrick booms, mast guys and funnels, there generally is not sufficient space on vessels to give the antenna wires their proper clearance. Therefore, the flat-top antenna is generally found on shipboard installations.

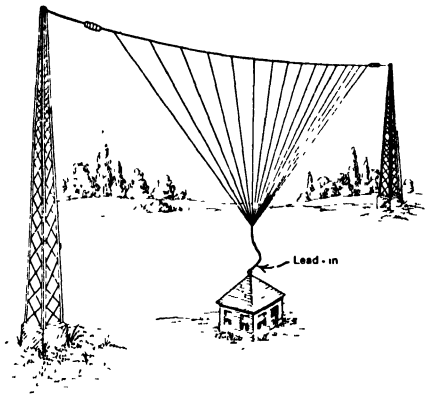

FIG. 275.—A vertical "fan" type antenna.

(2) The *umbrella antenna* is so called because the antenna wires spread radially in several directions from a common center at the top of the supporting mast. The antenna wires are generally about two-thirds the length of the mast, with heavy insulators connecting their lower ends to other wires or lines used as guys and fastened to ground stakes. The wires form a cone joining at the apex where the lead-in wire is attached and carried down to the apparatus in the station house. This type antenna is generally used for portable military sets, where the erection of an antenna must be accomplished in a few minutes.

(3) The *inverted-L flat-top antenna* illustrated in Fig. 276 consists usually of two to four parallel wires stretched between two supporting masts which are thoroughly insulated from the supporting halyards by insulators attached on either end to wooden spreaders. The horizontal wires *A* to *B* are called the flat-top portion. The vertical wires spliced together at one end are called *lead-ins*, and pass through a deck insulator to the apparatus.

The flat-top for ship installation may vary from 75 to 250 ft. or more in length, and the lead-ins from 70 to 150 ft., depending upon the height of the various supporting masts. The flat-top inverted-L type might be called a *directive* antenna because it possesses to some degree *unilateral* characteristics, radiating a large percentage of the energy in the direction opposite to the free end. It might be stated here that when the same antenna is used for receiving, it also has directional

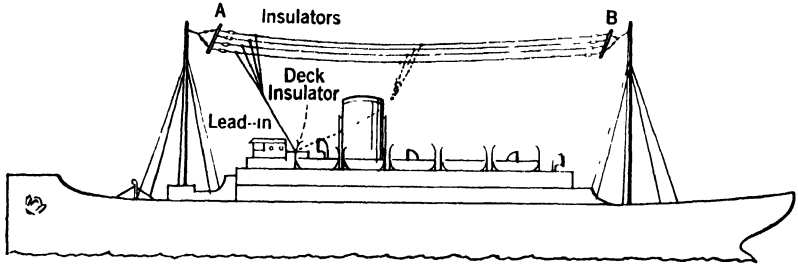

FIG. 276.—A typical inverted "L" type antenna installation. If the lead-in is connected to the antenna as shown by the dotted lines the antenna will then be known as a "T" type.

properties, in that it will absorb a greater proportion of radio waves emitted by a distant transmitting station which is located in a direction opposite to its free end.

The vertical antenna possesses an advantage in that it radiates practically with equal strength in all directions, but it is not always practicable to erect an antenna of this type, because of the very great height required as previously stated. A flat-top aerial, although having a slight disadvantage of *directive* radiating properties, is most suited to merchant vessels because of the greater convenience of installation.

(4) When the lead-ins of a given antenna are removed from the free end of the flat portion and attached to the center, the antenna is said to be of the T *type*, indicated by the dotted lines in Fig. 276. The fundamental wavelength of the T antenna is usually less than that of the inverted-L type of the same dimensions. By moving the lead-in wires to the middle, the distributed capacity of the antenna system

remains practically the same, whereas the total inductance will be less. This may be explained as follows:

It might be considered that the T antenna comprises two antennas connected in parallel to a common lead-in wire, and in the same manner that the inductance of two parallel conductors is less than either of them taken separately, the total inductance of the antenna will be reduced and the corresponding length of the radiated wave reduced accordingly. The difference in the fundamental wavelength of an L antenna and a T antenna of equal dimensions may be given only approximately in that the former exceeds the latter by the ratio of 1.1 to 1.8. For example, if an inverted L antenna 100 ft. in length and 60 ft. in height has a capacity of 0.0004 mfd. and inductance of 62,000 centimeters (1000 centimeters = 1 microhenry), the wavelength will be approximately 188 meters. In the T type antenna of the same dimensions, assuming that the inductance has been decreased to 37,000 centimeters, with the capacity remaining at 0.0004 mfd., the wavelength will be approximately 145 meters. The fundamental wavelength may be computed from the values given in the example cited above by substitution in the simple formula:

$$(\lambda) \text{ wavelength} = 38\sqrt{LC}.$$

L = inductance in centimeters;
C = capacity in microfarads

On shipboard, the principal consideration is to provide an antenna that will give the highest possible antenna current for each of the standard waves assigned to the transmitter. The standard transmitters are designed in the lower power sets for adjustment usually to the following five wavelengths: 600, 660, 706, 760, and 800 meters. For spark sets capable of adjustment to only three waves, the following are used: 600, 706, and 800 meters.

The higher powered sets are usually adjusted to ten wavelengths, including the five above mentioned and the following five wavelengths: 1800, 1900, 2000, 2098 and 2400 meters.

Other waves than those mentioned are also utilized for c.w. transmission, from 1450 to 2400 meters.

Since the standard transmitter must include a 600 and an 800 meter wave, the precaution must be taken to select an antenna of such dimensions that on these two lower waves a maximum degree of efficiency will be obtained, and at the same time the antenna will give a moderate degree of efficiency at any of its other wavelengths. It is seen now how difficult it is to construct an antenna that will fulfill all of the requirements for maximum radiation which we know is always

obtainable at or near the fundamental wavelength, provided good values of antenna current are also available at all of the other wavelength adjustments.

For instance, on certain large vessels, the distance between the masts may be great enough so that if a total length of wire possible were suspended, a series condenser would be required even for a 600-meter wave. Since the insertion of a series condenser lowers the radiation and can never be used to reduce an antenna to less than one-half its natural length it would be necessary in such cases to cut off a portion of the horizontal wires to keep the radiated wave within its limits.

On small vessels, where the distance between the masts does not provide sufficient length for the flat portion, sometimes six or eight wires are used to obtain the maximum possible capacity. In addition, large amounts of loading inductance are introduced in the antenna circuit to obtain the 600-meter wave. Several examples of natural wavelength, capacity and size of a ship's antenna are given in the following table, showing the capacity of some antennas to be rather large, which may be accounted for by the presence of nearby metallic structures:

Type	Length of Flat Top, Feet	Height of Flat Top, Feet	No. of Wires	Natural Wavelength	Capacity Mfds.
L	208	96	6	374	.00128
T	250	150	4	426	.00096
T	151	110	6	290	0009
L	170	85	4	380	00082

To summarize the characteristic, it is seen that the flat-top antenna is the only type that can be employed conveniently aboard most ships. A transmitter antenna installed for shore operation is not limited in height or length, as in the case of shipboard installation, but other mechanical and electrical features enter into the design of the antenna. It has been shown by experienced investigators that one disadvantage of a high type antenna is the relatively high capacity between the antenna and its supports which results in lowering the effective height; whereas on the other hand an antenna of moderate height, which may be erected covering a large area, but with an effective height, will give a large capacity.

In addition to the antennas described it is possible to use a single horizontal wire antenna on shipboard in some instances.

(5) The *cage type antenna* is illustrated in Fig. 277. The cage antenna consists of a number of component wires spaced equidistant, held in position by hoop spreaders (insulated micarta rings) forming a cylinder. The several antenna wires are brought together, or both ends may be closed in, as shown in the photograph, and the lead-in conductor attached to either end, depending upon the installation. The diameter of the spacer ring is determined by the size of the cage desired. In comparatively small antennas, one or more cages may be used, because of the simple mechanical construction, and they are less affected by wind than are the flat tops which use spreaders to separate the wires. For a given average height of the conductors, the flat top has the advantage that a slightly higher capacity is obtained, giving a slightly greater effective height and efficiency.

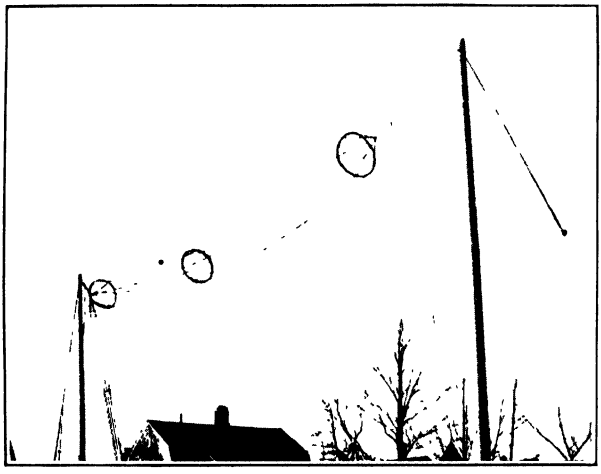

FIG. 277.—Cage type antenna with cage lead-in.

The voltage to which an antenna can be charged is limited. If it is energized to a very high potential, at a certain voltage, the ends of the wires begin to *brush* and discharge electricity into the surrounding air. This phenomenon, called *corona*, causes a considerable loss of energy, and it may sometimes be seen at night, especially in wet weather, appearing as a bluish glow. It is often observed that the lead-in wires from the antenna are made in cage form to avoid the effects of corona, especially in antennas subjected to very high potentials, perhaps as great as 75,000 volts or above. Such high potentials in the antenna system are developed usually only in commercial land stations and broadcasting stations in the super-power class and not in ordinary ship installations.

The diameter of a cage form of lead-in should be made as small as possible, as a small diameter decreases the capacity of the lead or leads to ground, and in this way the effective height and efficiency of the antenna will not be lowered. The spacing of wires in a cage

form is useful in obtaining a maximum of capacitance in a limited space.

Ship's Antenna Described in Detail.—In Fig. 278 the fundamental design of a ship's antenna is shown and is described in detail. The flat portion comprises six silicon bronze wires, each containing seven strands of No. 18 wire, equally spaced $2\frac{1}{2}$ ft. apart. The wires are connected to spruce spreaders from 14 to 18 ft. in length, attached to the running rope or wire halyard by the *bridle*, which is made up of four strop insulators. The halyards are passed through *reef blocks* or pulleys and fastened to the mast.

The strop insulators may consist of $\frac{5}{8}$-in. Russian boat rope covered

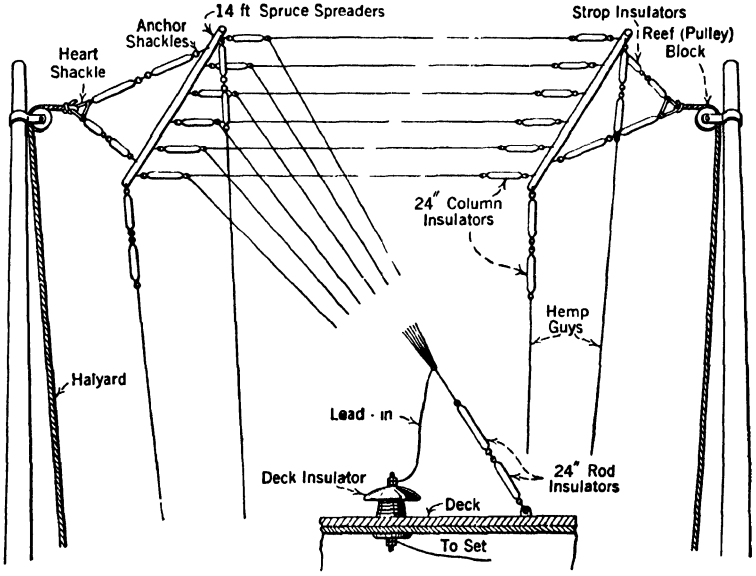

FIG. 278.—A detailed drawing of a typical flat top inverted "L" antenna for shipboard installation.

by a hard-rubber tube with a space between the rope and tube filled with sulphur to keep out the moisture. The bridle ends are attached to a heart-shaped shackle, to which is connected the galvanized steel halyard wire for raising and lowering the antenna.

Each wire of the antenna is insulated by a 24-in. hard-rubber or electrose column insulator which is attached to the spruce spreader by an eyebolt. The insulator must be unaffected by ordinary degrees of cold, heat and moisture. Insulators usually are made with a corrugated or ribbed surface to increase their effective length. This is for the purpose of permitting water to collect and drain off. It also provides a

greater length of surface from one end of the insulator to the other, offering a higher opposition to any current leaking across it. The importance of adequate protection is evident in this comparison. A column insulator $10\frac{1}{2}$ in. in overall length (the length of the insulating body 7 in.) stands an electrical test, when dry, of 90,000 volts, but the electrical value when tested in rain is only 55,000 volts.

The lead-in wires are spliced to one end of the horizontal wires of the flat top and are in turn connected to the lead-in wire running to the deck insulator. The strain on the lead-in is removed by attaching it to two 24-in. rod insulators which are secured to the deck by a heavy screw eye. The spreaders are prevented from swaying by side stays attached to either end through insulators, and fastened to the mast. The connection between the lead-in wires and the flat top wires may be made in various ways, but in general they should be soldered and joined with specially approved connectors.

Deck Insulator.—Deck insulators are designed for properly insulating the antenna where brought through a building or deck of a ship. The deck insulator of a transmitting antenna must have the highest insulating properties and must be able to withstand at least 30,000 volts, or more, depending upon the power of the apparatus. Perfect insulation is absolutely necessary at this point.

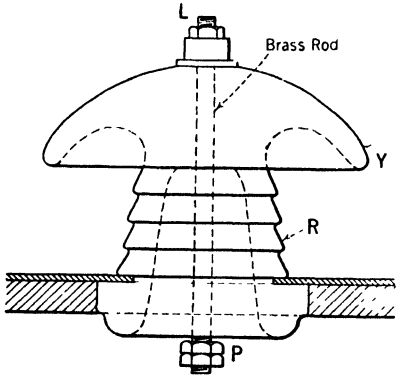

FIG. 279.—Porcelain type deck insulator used with high-power commercial transmitters.

One form of deck insulator used to connect the open antenna at its entrance into the operating cabin is shown in Fig. 279. It consists of a long hard-rubber or electrose tube *R*, several inches in diameter, with a brass rod, shown by the dotted line, extending through it, with a terminal lug at each end; one at *L* for convenient connection of the antenna lead-in wire and one at *P* for connecting the lead-in to the transmitter panel.

The hole drilled through the place of entry is of sufficient proportions to allow the insulated part of the insulator to pass through; and when two large threaded flanges are drawn up tightly with a piece of canvas strip or rubber packing placed underneath, covered with white lead, a good watertight joint is made. Because the upper portion of the insulator is exposed to the elements, a metal mushroom head

Y is used to cover the tubing, protecting it from moisture and dampness.

Another type of deck insulator, which is about 27 in. in overall length is often used. It is of the moulded corrugated or rib type, with a heavy brass rod moulded securely into it with convenient connecting lugs terminating each end. The outside flange of the insulator is threaded and after it is inserted in the hole in the deck it is drawn up tight by a collar which is threaded on the inside. The same care for water-proofing the joint must be exercised.

Ground System.—The ground system is that part of a complete antenna system which is below the transmitting apparatus, being most closely associated with the ground and including the ground itself. The *ground wire* is the conductive connection to the earth.

The ground connection from the transmitting apparatus of marine installations should be made direct to the metal bulkhead by a bolt. The necessary ground is thus conveyed through the metal hull. The ground connection on wooden vessels is made to the propeller shaft in the engine room, or to a large strip of copper nailed to the bottom of the hull.

The ground system for a land station is modified according to the particular type of soil available for a suitable earth connection. When a station is located on dry soil or rock and otherwise not favorably situated, the ground wires are merely laid on the surface of the ground underneath the flat portion of the aerial and spread out radially in all directions. This ground system is called a *counterpoise* (or earth screen), and is the method employed to reduce soil resistance. *The counterpoise increases the distributed capacity between antenna and ground* and is always used when a good moist ground connection is not available.

Condenser Antenna.—In general the counterpoise is elevated above the ground covering about the same area as the antenna itself. The counterpoise forms a lower capacity area, and the antenna itself the upper; together they form two capacity areas, with the space between acting as a dielectric, and the whole system then is known as a *condenser antenna*.

A number of copper or zinc plates may be buried in moist earth, or a buried ground wire may be used in combination with the counterpoise as another means of reducing soil resistance. All wires used in a counterpoise, or buried ground system, are joined to a common terminal and connected to the ground post of the transmitting apparatus.

The fundamental principle of keeping the soil resistance low is to provide short paths for the current through the soil. An actual measurement of soil resistance is necessary before a ground system can be

designed properly; for, in some cases, it is found that the unit resistance of dry sand is more than 500 times the resistance of salt marsh. One of the greatest advancements in the solution of the problem to provide short paths for the ground currents was the development of multiple tuning by E. F. W. Alexanderson. The construction of this antenna and ground system is in effect a multiple arrangement. A ground distributing system of reasonable proportions is obtained by providing a number of tuning coils spaced along the length of an antenna through which the antenna current is distributed, rather than having the total current flow through one coil.

The *multiple tuned antenna* is strongly directive and the inductances are tuned so that their r ...ct present a total reactance equal to that necessary ... antenna the desired natural frequency.

It has been shown that the inverted L antenna will receive signals from a greater distance when they are coming in a direction which causes them to be impinged first upon the vertical end of the antenna. It is thought that the waves radiated by an antenna are retarded in their propagation over dry earth, or that the lower part travels more slowly than the upper part, causing the field of the radiated wave to be tilted against the direction of movement.

The greatest amount of energy is absorbed by a receiving aerial from a passing wave when the wires are at right angles to the magnetic field and parallel to the electric field. Therefore, better distances are covered or greater radio-frequency energy is induced in the receiving antenna if part of it is vertical and part horizontal. Hence, if two L antennas are erected with their free ends opposite each other, and their horizontal wires exactly in a line pointing toward each other, the communicating range between the two stations should be greatly increased.

In order to obtain the fullest efficiency from this phenomenon, a single wire directional antenna has been designed, known as the *Beverage or Wave Antenna.* The horizontal wire is constructed with a physical length exactly the same as the wavelength of the signals, or the wire may be lengthened in multiples of a given wavelength. The far end of the Beverage Antenna, ordinarily the free end in the average antenna, is grounded through a resistance of the same value as the impedance of the horizontal wire when installed. It is evident now that a resonant antenna circuit may be constructed in which maximum values of radio-frequency current will flow at a given wavelength.

Radiation.—It has been found that when an alternating e.m.f. has been established between the antenna and ground, or across any conductor acting in like manner, an electrical field will be set up surround-

ing that conductor. This disturbance is manifested by the propagation of electromagnetic waves throughout space at constant velocity. Electrical energy is thus transferred from one radiating circuit to another. In general, an antenna system resembles an oscillatory circuit, and when high frequency current oscillates through the circuit, the electrical energy is dissipated or extracted from the circuit on account of its resistance. When a circuit is employed chiefly for its radiative properties, such as the antenna of a transmitter, the electrical energy is dissipated in three different ways:

(1) Energy is dissipated due to the *ohmic resistance* of the wires and metal conductors comprised in the circuit, such as the antenna wires, lead-in wires, the loading coil and ground connections. This loss of energy is equal to the current squared multiplied by the resistance, which is usually called the *heat loss.*

(2) Energy is extracted from the circuit by *radiation,* this energy being expended in the electric waves traveling outward into space. *The amount of energy radiated is proportional to the square of the current in the antenna and inversely proportional to the square of the transmitted frequency.* The energy *lost* by radiation is useful energy, because it goes to make up the wave motion, but any other losses incurred detract from the efficiency of the transmitter and therefore should be reduced to the lowest possible value. The following segregated list of various components of the resistance of one antenna, calculated by engineers at Radio Central Station, gives a very practical evaluation of these factors:

	Meters	Ohms
Radiation resistance at	16,500	0 05
Soil resistance at	16,500	0 10
Tuning coil resistance at	16,500	0 15
Conductor resistance at	16,500	0 05
Insulation and other losses at	16,500	0 05
Total		0 40

The resistance of the antenna conductors can be reduced to a minimum by using a number of stranded copper wires connected in parallel. As previously shown, the earth resistance is reduced by the use of either buried plates, buried wires or counterpoise. Various methods are used to obtain a good contact when only the natural earth ground is used.

The so-called loss of energy by radiation may be expressed as an effective resistance called *radiation resistance,* expressed in ohms, since any energy radiated will cause damping of the oscillations in the antenna circuit. The radiation resistance or effective resistance may be defined

as *the quantity which multiplied by the square of the effective current in the average antenna determines the average power of the radiated waves.*

(3) Energy is lost through absorption by surrounding objects. An antenna essentially is an air condenser and conduction or poor dielectric materials should not be located where its electric field intensity is great. It should be apparent that the dielectric medium surrounding most antennas is not perfect, since it includes supporting masts, guys, funnels and derrick booms on shipboard installation, or other conducting materials, such as trees, buildings, and other objects, on land installation. The supports or tower introduce a power loss, but by careful design and by locating the antenna free and clear the power loss due to absorption is kept at a minimum. The power loss from poor dielectrics in the electric field of the antenna is usually called a *dielectric absorption loss.*

The effective resistance of an antenna is the sum of all the components indicated in the explanations just given. It is evident that the resistance of an antenna will vary with each change of conditions and frequency of the current oscillating in the system. The resistance values just given for 16,500 meters apply only to one set of conditions.

Power of the Radiated Wave.—Generally speaking, as the height of the antenna is increased, an increase in the range of a station may be expected. A greater displacement of current, or radiated field, is set up about the antenna with an increase in height. Many experiments and tests tend to verify the theory that the transmitting range of a radio station is proportional to the product of the square of the effective height of the antenna in meters and the antenna current in amperes at the point of maximum current.

The radiating strength of the transmitter may be expressed in formula as follows:

$$W = 1578 \times \frac{h^2}{\lambda^2} \times I^2$$

in which

W = the energy radiated in watts effective;
h = the effective height of the antenna in meters;
λ = the wavelength of the antenna in meters;
I = the current in amperes at the base of the antenna or point of maximum current.

For example, if an antenna 50 meters, or approximately 160 ft. in height, transmits at a wavelength of 600 meters, and the antenna current is 10 amperes, the energy propagated in the form of electric waves will equal

$$1578 \times \frac{50^2 \times 10^2}{600^2} = 1046 \text{ watts}$$

It will be shown later that the distribution of current is non-uniform throughout the antenna system, and the foregoing formula is based on the assumption of equal current distribution, such as could be had only in an ideal antenna. That is to say, an *ideal antenna* would be one in which a current of uniform value will flow throughout its conductors, such value equaling the maximum which the current attains at any point in the actual antenna with which comparison is being made.

In order to effect a more accurate determination of the power of the radiation, we must consider the *form factor* of the antenna; that is, its type of construction which determines the ratio of the *actual physical height* of the antenna to its *effective height*. This may be better understood if we will consider the factors that govern the non-uniform distribution of current and voltage in the antenna.

In Fig. 280 a simple antenna circuit is illustrated in the form of a single wire erected vertically and grounded at the lower end. This drawing clearly shows that between the portion of antenna wire *A* and *B* to ground, there is formed a condenser having a certain amount of capacitance, called *distributed capacity*. Between sections *B* and *C* and ground there is also formed a similar condenser, but having a different capacitance because of its greater distance from the ground. In the same manner, the capacitance of the antenna is changed for each of the other sections *CD* and *DE*. In other words, the capacitance decreases for the upper sections of the antenna in the same manner that the capacity of a condenser is decreased when its plates are spaced farther apart.

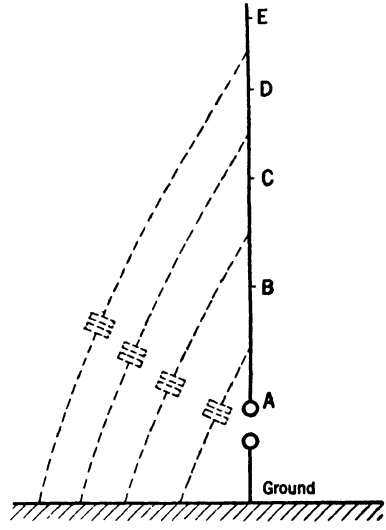

FIG. 280.—This sketch is for the purpose of explaining the distributed capacity effect throughout an active antenna.

It is apparent that the capacitance of an antenna is not uniformly distributed along the entire length of the wire, but is greater at the lower portions of the wire. The inductance of the antenna wire is approximately the same throughout the different portions of its length.

We see from the explanations just given that the radiation resistance

depends directly upon the effective height of an antenna, and it should be clear that any increase in height will also increase the distributed capacity and add to the length of the radiated wave.

Radiation resistance is a factor which should be made as high as possible, for it represents the dissipation of energy due to propagation; that is, a considerable amount of the energy is radiated away from the antenna circuit in electric waves. The other resistance factors should not be excessive in that they would tend seriously to damp out the oscillations and interfere with the tuning qualities of the wave.

The dissipation of energy in a train of oscillations such as is generated by a spark transmitter is measured as *logarithmic decrement.* The oscillations will be less feebly damped, that is, they will die out less rapidly, if a certain amount of localized inductance is inserted at the base of the antenna, because this inductance will have all of the properties of inductance inserted in a closed alternating current circuit. The *base* of an antenna referred to here means the point in the antenna system where the loading coils of the transmitting apparatus are located. The flow of antenna current will be reduced after a certain critical value of localized inductance is inserted, which critical value can be observed by the reading of the antenna ammeter and determining of the decrement of the oscillations by a decremeter. The efficiency of the set will be reduced if a feeble decrement is obtained at the expense of antenna current.

Due to the unequal distribution of capacity along the antenna, the total energy of a simple vertical wire antenna system will divide itself so as to give a maximum current at the base of the antenna, and a maximum voltage at the extreme top, or free ends. Then expressing this in proper terms, the bottom or grounded portion of the antenna is always a *node* for voltage and *anti-node* for current, while the extreme top portion is a *node* for current and an *anti-node* for voltage. This distribution of energy is represented graphically by the curves in Fig. 281. It is shown that a current anti-node exists at G and a voltage node at E, and conversely at the upper locations M and N.

The ground or earth is always at zero potential and other charged bodies or conductors must be at some potential with regard to the ground. For this reason current can flow by either inductance or capacity paths to ground, so that maximum current is flowing at the base of the antenna. This accounts for the fact that radio-frequency ammeters, which are current indicating instruments, are usually connected in the ground side of a transmitter and used only as resonance indicating devices. These ammeters are often referred to as radiation

or antenna ammeters. It should be understood that this meter does not indicate the actual amount of energy in the transmitted (radiated) wave.

There are other possible oscillations, called *harmonics*, which accompany the production of a fundamental wave. The several harmonics have frequencies in multiples of the fundamental. The next possible frequency to the fundamental is shown in Fig. 282 and the general scheme for illustrating the maximum and zero voltage and current points, that is, *nodes* and *anti-nodes*, at the top and base of the antenna

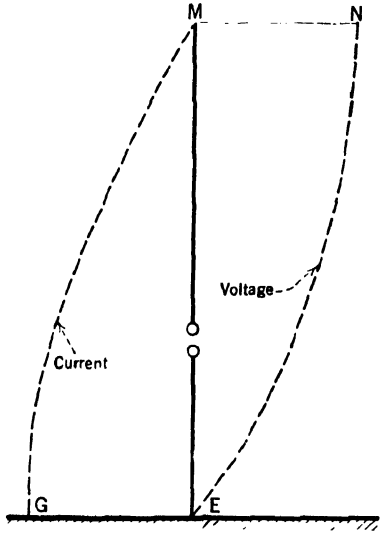

FIG. 281.

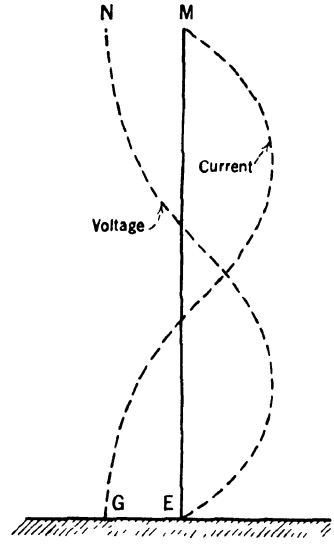

FIG. 282.

FIG. 281.—This drawing shows that in an active antenna system the voltage is maximum at the top and zero at the base or ground, whereas the current is maximum at the base and zero at the top.

FIG. 282.— An attempt to show the principle of distribution of voltage and current in an energized transmitter antenna.

is similar to Fig. 281. But Fig. 282 shows also that due to the production of a harmonic oscillation there are other current and voltage nodes and anti-nodes along portions of the vertical antenna wire.

An analogy for the production of harmonics in electrical oscillations can be found in the case of a musical string vibrating on its fundamental and second and higher harmonics. If a musical string is supported at both ends, but is otherwise free, and is picked to set it into vibration, not only the whole string vibrates (a condition which produces the fundamental note by which we distinguish this particular note), but its two

halves, three thirds and smaller portions also vibrate independently of the main vibrating motion. It is a complex motion, a sort of whipping action as shown in Fig. 283, where the string is vibrating on its fundamental and second harmonic. It can be seen that while the string as a whole moves back and forth from *ADC* to *ABC* (its fundamental motion), there is also a smaller movement or faster vibration set up between *AB* and *BC* which constitutes the second harmonic with *B* as a *nodal point.* Other faster vibrations (not shown) will occur along the dotted portions *AB* and *BC* and these smaller movements will occur at a rate which is some multiple of the frequency of the fundamental or main motion. It is a vibration within a vibration and the second, third, fourth, and other harmonics will have frequencies two, three and four times the main frequency, and so on.

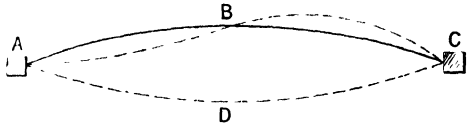

FIG. 283.—A musical string set into vibration is a good analogy for explaining that harmonics are always produced with the fundamental.

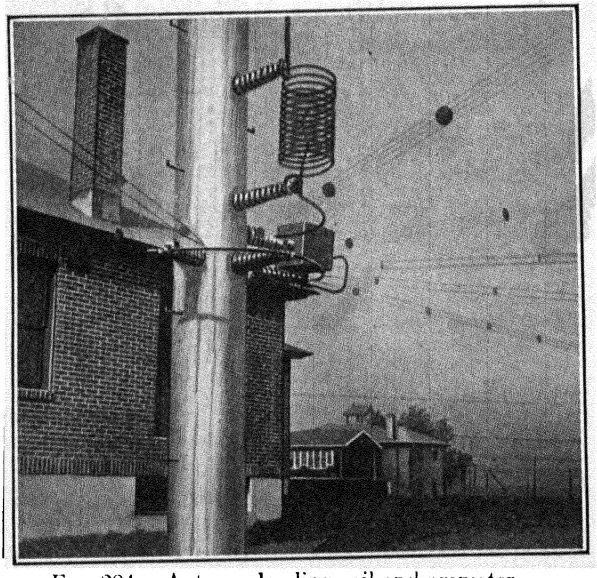

FIG. 284.—Antenna loading coil and ammeter Station KDKA.

The antenna loading coil and ammeter of the antenna system of a modern short wave transmitter, used either for telegraphy or broadcasting, is shown located entirely out of doors (see Fig. 284) and the antenna is set into oscillation by radio-frequency power supplied to it from the transmitter apparatus through one or two conductors called *feeder wires* or *feeder lines.* It is necessary in this type of equipment to locate definitely the nodal points along the antenna for the proper connection of the feeder wire to give maximum radiation.

Transmission Range.—The transmission range is governed by the dielectric medium which separates a transmitting and a receiving circuit. When the intervening space separating the communicating stations includes trees, buildings, mountains and water, which may be either poor insulating materials or good conductors, the dielectric in any event is not perfect, and therefore will contain *free electrons*. The atmosphere itself is not a perfect dielectric, especially in the daytime when the sun's rays ionize the air and make it more or less electrically conductive. Free electrons are set into motion by the waves radiated from a transmitting antenna, and part of the energy of the waves is thus absorbed. It is assumed that this absorption (called dielectric absorption) increases with the frequency phenomenon, which is now being studied in connection with the use of short wave transmission It may result in accounting for the fact that greater radio distances can be covered at night than in the daytime.

There are theories advanced for fading or periodic diminishing of the signal intensity, which is especially noticeable on short waves. Figure 285 illustrates the modern theories of wave propagation and what are termed a *sky* wave and a *ground* wave. Some of the emitted waves of a transmitter are presumed to travel along the surface following the curvature of the earth, the energy being absorbed so as to disappear entirely several hundred miles from the transmitting antenna. On the other hand, the reflected sky wave may permit the signal to be heard thousands of miles from the transmitter, but not audible in the intervening distance between stations. Sky waves are assumed to be projected through the transmission path toward the sky, and, as stated before, the energy is absorbed in daylight due to ionization of the atmosphere which makes it electrically conductive.

When a sky wave reaches this ionized layer it is reflected and the wave comes down at an angle from the upper atmosphere. It is thought that from a period shortly after sunset until just before dawn there remains only a slight ionization of the lower atmosphere, but in the upper layers, miles above the earth's surface, the ionized condition still exists, due to the rarefied atmosphere. This would gradually increase the height of the reflecting layer and change the angle of the coming down wave, or reflected wave, causing a variation in the signal during the night. The normal height of the reflecting layer which is continually changing is assumed to be about 100 miles. It seems probable that the carriers in the ionized layer are electrons.

Figure 285 shows a transmitted wave reflected from the under surface or strata of rarefied air just the same as light is reflected from a mirror. When the contour, or height, of this ceiling of rarefied atmos-

phere changes rapidly, it will interfere with the transmitted wave and may be considered a cause for *fading.*

Fading is the variation of the signal intensity received at a given location from a radio transmitting station as a result of changes in the transmission path. Fading should not be confused with the *swaying* in and out of signals. The latter is due to a variation in intensity of a received signal due to unavoidable changes in the frequency of the transmitted waves.

The eminent scientists, Heaviside and Kennelly, were the first to

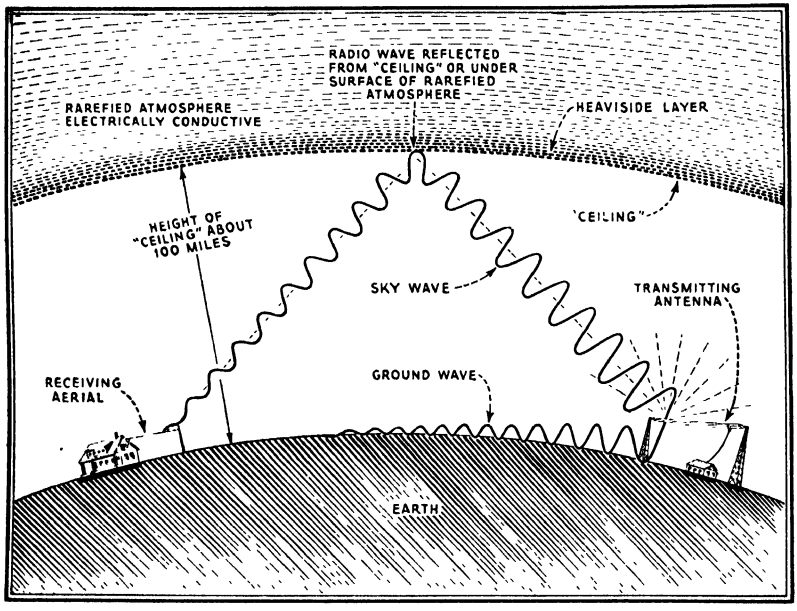

FIG. 285.—A graphical explanation of the Heaviside-Kennelly theory of radio wave propagation between sundown and sunrise.

advance these theories pertaining to the upper stratum of rarefied air, which is known in general as the *Heaviside Layer.* For any variation in the height of the ceiling, or reflecting layer, the angle of the reflected wave is also assumed to change. This might account for the attenuated condition of the signal which reaches a very distant station but is not heard at stations within closer range. This phenomenon is called the *skip distance* and is particularly troublesome in short wave transmission.

Attenuation is the reduction in power of a wave of current as the distance from the source of transmission is increased.

Radio signals in leaving the transmitting antenna travel in all direc-

tions. Waves traveling downward penetrate the earth to a certain depth. Waves traveling in a horizontal direction over the surface of the earth, called *ground waves,* are gradually absorbed by various objects in their path and grow weaker as the distance from the transmitter increases. Waves traveling upward are supposed to continue until they strike the Heaviside layer, through which they will not pass, but are reflected toward the earth when coming in contact with this layer. Another peculiar phenomenon attributed to the Heaviside layer is that the radio wave is not always immediately reflected, but tends to glide

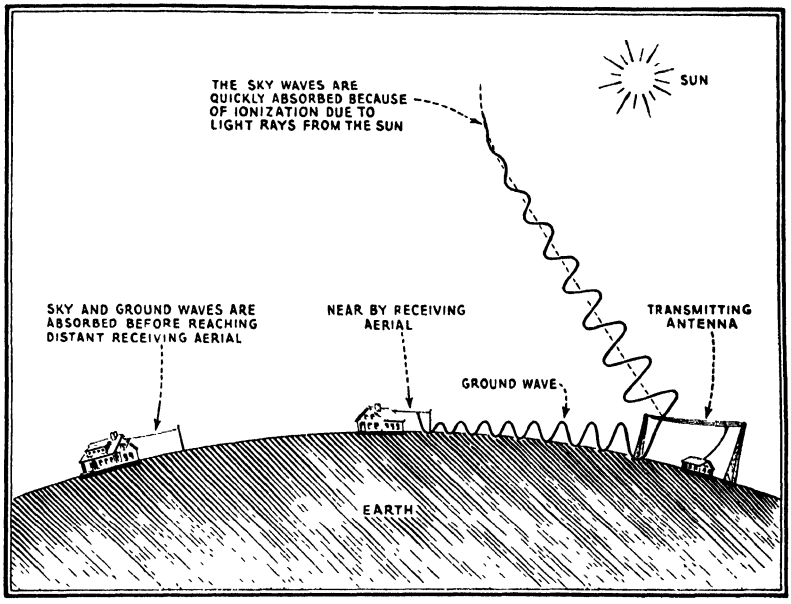

FIG. 286. Another graphical explanation of the Heaviside-Kennelly theory of radio wave propagation showing how the sun's rays act to absorb the energy in a transmitted signal. This accounts for the reduction in transmission range during daylight hours.

along the underside of the layer, in some cases for a considerable distance, before finally being reflected to earth.

The radio signal arriving at the receiver antenna is a combination of the ground wave and the wave reflected from the Heaviside layer. In daylight the waves traveling upward are for the most part absorbed, as previously mentioned, and are therefore lost, the ground waves being the only waves received and which come directly to the receiver over the surface of the earth, as represented in the drawing, Fig. 286. During darkness, however, this condition is changed. The ground wave

and the reflected wave both reach the receiving antenna, which, let us say, is within two or three hundred miles of the transmitting station.

The waves traveling upward to the Heaviside layer and reflected back travel a greater distance than the ground waves in reaching the receiving antenna. Therefore the reflected waves may strike the antenna a little later than the waves coming direct. The combination of the two waves may be such that they completely balance out each other, due to the positive alternation of one wave arriving at the same instance the negative alternation of the other wave arrives. When the Heaviside layer shifts, there is a change in the relation, and the signals are heard again and in many cases become stronger than they were previously.

The phenomenon of fading, therefore, cannot be attributed to the fault of the transmitter or receiver. At the present time fading is beyond human control, and nothing can be done with it until the conditions responsible for the phenomenon can be grasped and solved by scientists.

Experiments have been performed by Pickard, Alexanderson and other investigators to determine the attenuation of the ground wave for comparison with the component sky wave reflected from the ionized layer. Dr. L. W. Austin of the Bureau of Standards has issued a report on the propagation of electromagnetic waves which covers the practical observations for several years of committees specially assigned to carry on this work in England, France, and the United States. It should be of particular value and interest to students desiring additional information on this subject.

In some of the observations a direction finder is used with a loop antenna and a vertical Hertz antenna. The vertical antenna consists of four wire rods suitably connected and is equivalent to a rotating loop having only sides and without top or bottom. The idea is based on the theory that the reflected wave front coming down from the upper atmosphere at an angle would be so tilted that the magnetic lines of force would cut the top and bottom as well as the sides of a coil antenna, whereas, when the Hertz antenna is used, only vertical wires can be acted upon by the advancing field of the wave. Experiments in England have shown that the night effect is almost entirely eliminated when receiving with the four vertical Hertz rods, tending to substantiate other proofs that a descending wave of this character is reflected from the ionized medium, such as the Heaviside Layer is assumed to be.

Any loss of power in a transmitted radio wave, due to a dissipation in the atmosphere, is called *atmospheric absorption.*

CHAPTER XIX

RESONANCE

Simple Analogy for Visualizing the Principle of Resonance.—When two electrical circuits work together in harmony, any one of the following expressions may be applied to state this condition: *in tune, in resonance,* or *adjusted to the same frequency.*

When not working together in harmony one can express the conditions by: *out of tune, dissonance, non-resonant,* or *not adjusted to the same frequency.*

A very simple experiment can be performed with two pendulums, Fig. 287, to illustrate the foregoing conditions.

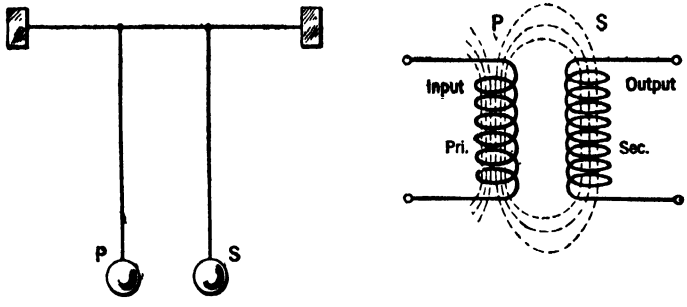

FIG. 287.—Illustrating the principles of resonance between electrical circuits by the simple analogy of two pendulums when set into oscillation.

Two weights of equal size are suspended by strings of equal length, spaced a few inches apart, supported by a string stretched between two fixed points as shown in the drawing.

If these pendulums have the same natural rate of swing, or are equal in their " to and fro " motion when pulled to one side and released and then allowed to oscillate, both are said to have the same *oscillation period* and are then in tune.

Now suppose we pull only the pendulum P to one side and release it. It starts swinging, and presently it will be noticed that S picks up the motion. The oscillations of S will become greater and

greater and it is evident that the energy originally put into P is now being transferred to S. The oscillations of P will begin to fall off in swing, that is, damp out, at a certain rate until it gradually comes to rest. The extreme position of the pendulum, reaching either to the right or left of its position of rest, is called the oscillation amplitude.

The oscillation amplitude will not be as great in S as in P, however, but each pendulum will move back and forth the same number of swings per second, which may be called their frequency.

At times one pendulum may be moving while the other is at rest. It should be noticed especially that after a short time when the swing of S is decreasing in amplitude, P is again set into motion. Hence, S possesses sufficient energy while it swings to excite P, causing it to swing. The swing of P, due to this reaction of S upon it, may not be very strong, but it shows that such a relation exists between two *resonant quantities.*

This *give and take* action is really going on all the time because the two pendulums are *in tune.*

If, however, S is made a little shorter or longer than P, so as to give it a different oscillation rate, or rate of damping, the two pendulums will not be in tune. Let us again set P into motion. It will be found that although a feeble motion or a limited amount of swing will be induced in S, practically the two pendulums are not working together, and not being in unison they will both jerk about in a most irregular fashion and finally come to rest.

The P pendulum may be taken to represent the primary coil of a radio transformer and the S pendulum the secondary. The oscillating magnetic fields surrounding either of the coils (when oscillating currents are flowing therein) produce effects similar to those of the pendulums. For instance, the primary field will excite the secondary, and in turn the currents induced in the secondary will build up a field encircling the secondary which links or cuts back upon the primary. Thus we have a primary action with its accompanying reaction.

The primary is the *driver* or *exciter circuit* and the secondary is the *excited circuit.* Refer to the pendulum experiment and again watch the movement of P, as it gradually builds up oscillations in S, and note how S then becomes the driving pendulum, causing smaller oscillations in P. The transfer and retransfer of energy go on forward and backward until all the initial power is expended (the power originally supplied when P was pulled to one side and released). It will be realized that the falling off in swing in either pendulum is due principally to the frictional resistance of the air, not to mention the effort required to twist the supporting string slightly at the bearing point.

The result of coupling a primary oscillatory circuit to a secondary oscillatory circuit is the production of a reacting force, one circuit acting upon the other at all times while alternating current is flowing. This peculiar condition which might place either P or S in and out of resonance in the electrical circuit would be called *mutual inductance.* It is not unreasonable to assume that there is a *mutual relation* existing between the two pendulums for either one at times excites movement in the other.

Wavemeter (Frequency Meter).—The wavemeter is one of the most important measuring instruments in the radio field, and is used to calibrate a transmitter or receiving circuit to a definite frequency or wavelength. Its principle of operation depends upon the phenomenon of resonance. Some wavemeters are designed to transmit a radio-frequency energy which can be detected in a receiver, and the receiver may then be calibrated from the known frequency of the wavemeter. Transmitters radiate their own energy. A wavemeter held in close inductive relation to the oscillation transformer of a transmitter will have radio oscillations impressed upon its circuit.

A suitable meter will indicate, by a maximum current deflection of its needle, when the wavemeter circuit is adjusted to resonance. This is done, usually, by varying the capacity of the air condenser in the wavemeter circuit. The condenser scale is marked in divisions and calibrated either directly in terms of frequency (kilocycles) or wavelength (meters), or in degrees. If the condenser scale divisions are marked in degrees, a graph or chart will accompany the meter. More and more such measuring instruments are being calibrated in kilocycles instead of meters and practically all the operating points in the frequency spectrum for stations are listed in kilocycles with the equivalent in meters also given.

The curves on the graph are so drawn that for any degree of setting of the condenser the corresponding frequency in kilocycles, or wavelength in meters, may be read.

The wavemeter consists essentially of a variable condenser with its dial calibrated, and an inductance, called an *exploring coil,* previously calibrated from a known standard of inductance. The meter which indicates the maximum current in this oscillatory circuit, comprising inductance and capacity, must be so arranged that the meter movement will not in any way impede the radio-frequency currents that flow.

A hot-wire meter, consisting of a straight wire along which the currents flow, may be used to illustrate the principle. Since the heat dissipation increases and decreases with an increase or decrease of

current, the wire will expand and contract, and a small spool or bobbin is turned by any change in length of the hot wire. The spool is connected to the needle and a movement is imparted to the latter, causing it to deflect across the scale. Usually the divisions on the scale do not indicate the actual current flow, but are arbitrary divisions for comparative reading. The divisions are not uniform in length, but become gradually greater as the current intensity increases. This follows the current square law of alternating currents.

One type of indicating meter in use is the *thermo-couple*. The oscillatory circuit is brought to a junction which is composed of two dissimilar metals, for example, bismuth and antimony, and current which flows across this junction will produce an e.m.f. much the same as though

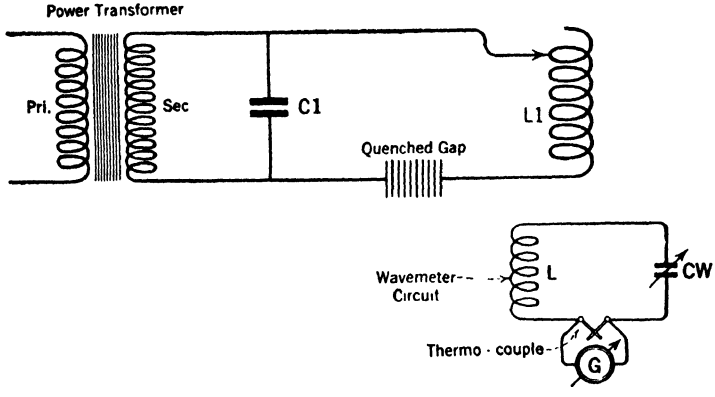

FIG. 288.—The wavelength of the closed oscillatory circuit may be measured with the wavemeter.

the junction were heated by a flame. A galvanometer connected to the junction will indicate the value of the current. This meter is constructed similarly to a d-c. ammeter, in that its electromagnetic winding acts upon a permanent magnet to give movement to the needle. The radio-frequency currents only pass across the junction and not through the meter windings. The meter scale is generally calibrated in divisions from 0 to 100, each of equal length because the deflection depends upon the magnitude of the e.m.f. produced at the junction. The value of the direct current in the meter is directly proportional to the e.m.f. set up at the junction.

Let us suppose that circuit L_1C_1 in Fig. 288 is oscillating at an unknown frequency f_1, which we desire to measure. Place the wave meter in inductive relation to the circuit L_1C_1 and adjust condenser CW until a maximum deflection is obtained on the meter. From the reso-

nance formula we know that the wavemeter frequency f_w equals the frequency of the circuit under test, or $f_w = f_1$.

Wavemeters are supplied with several inductances, or exploring coils. One coil is selected and when inserted in the wavemeter it will cover a definite band of frequencies. The different coils are designed so that the frequencies they cover overlap at the upper and lower limits in order to provide continuous frequency range.

High Frequency Buzzer Excitation Circuit.—A simple arrangement for the wheatstone bridge is illustrated in Fig. 289. The primary of the transformer supplying energy to the bridge circuit is excited by a buzzer and small battery. A convenient source of damped oscillations for testing purposes may be obtained from such a buzzer excitation circuit. The buzzer excitation circuit consists of the buzzer, a battery, the switch, and the oscillatory circuit embodying inductance L and capacity C. The circuit on the right is the circuit under measurement.

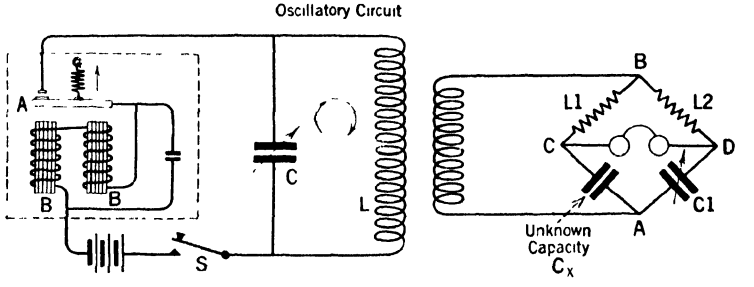

FIG. 289.—A wheatstone bridge circuit may be energized by a buzzer circuit for testing purposes.

When telephone receivers are connected across the bridge in place of a galvanometer, an audio-frequency note will be heard. The correct adjustments of either capacity or resistance of the bridge to obtain a balance is observed by the changing intensity of the signal received in the phones which are connected between C and D. When the bridge is balanced by adjusting C_1 no difference in electrical pressure exists between C and D. Hence with the bridge circuit balanced current will not flow through the phones. It is not always possible to obtain a condition of zero current, but we seek to obtain a point of adjustment of the bridge circuits to produce a minimum signal.

The operation of the buzzer circuit is as follows:

When switch S is closed, current flows from the battery through the two buzzer windings B and B, and through iron armature A, across the contact points, thence through inductance L, returning to the battery. A magnetic field builds up around inductance L when current flows

through the circuit, this field representing a definite amount of energy. The magnetic field surrounding these coils energizes the iron core which attracts the iron armature, separating the contact points and opening the circuit; whereupon current ceases to flow. The magnetic field is now dissipated and as the lines of force recede upon the turns of wire in the coil, they induce therein an e.m.f. which charges condenser C. The energy formerly concentrated in a magnetic field around L now exists as an electrostatic field in the dielectric of condenser C. Condenser C is now charged with an e.m.f. across its plates.

It is seen that LC forms an oscillatory circuit. When C discharges, alternating current will oscillate through circuit LC at its natural frequency as determined by the inductance and capacity values of L and C respectively. One wave train of radio-frequency oscillations, which are rapidly damped out, is produced in this short interval of time.

Immediately after the armature is pulled down, direct current ceases to flow through the buzzer circuit, and the electromagnet is de-energized. This allows the armature to be pulled back to its original position by a spring, thus forcing the contact points again to close. Current now flows through L creating a magnetic field around L which attracts the armature, and the circuit is again opened by the separating of the contact points.

The dissipation of the magnetic field around L again induces an e.m.f. in the circuit, which charges condenser C and another group of damped radio-frequency oscillations is produced.

A large condenser of 1 mfd. capacity is shunted around the buzzer coils to absorb the magnetic energy stored in the coils, which would otherwise produce sparking at the contact points, due to the voltage generated on the *make-and-break* of the circuit. The constancy and purity of the oscillations generated in the circuit LC is maintained by the use of this condenser. At each make-and-break of the buzzer contacts one wave train of decaying oscillations is sent out to be received and heard as one click in the telephone head-set. The pitch of the note can be varied by changing the armature spring adjustment to either increase or decrease its frequency of vibration. The buzzer circuit becomes a miniature transmitting station sending out groups of damped oscillations at audio-frequency, especially suited for testing purposes.

Electrical Resonance.—When the open and closed oscillation circuits of both a receiver and a radio transmitter are adjusted to the same natural frequency of oscillation, they are said to be *in resonance.* Maximum alternating currents will flow in the receiving circuits when they are in equal resonance with the transmitting circuits.

To adjust the circuits to any desired frequency of oscillation, a standard calibrated oscillatory circuit, known as a wavemeter, is employed. The wavemeter circuits shown in Fig. 290 consist of an indicating device, a radio-frequency inductance L, and a variable condenser C, which together constitute an oscillatory circuit of variable frequencies.

The actual frequency value for any particular setting of the variable condenser is determined by the fundamental equation for frequency as follows:

$$f = \frac{1}{2\pi\sqrt{LC}}$$

For every divisional mark on the condenser scale, the particular frequency at which the circuit oscillates when set into excitation may be indicated either in terms of a given frequency of oscillation in cycles, or a wave of definite length in meters.

The wavemeter is an instrument with a condenser scale calibrated directly in wavelengths or in oscillation frequencies. There are three factors in an oscillatory circuit: *capacity, inductance* and *resistance.* Although the resistance is usually negligible, yet it noticeably affects the period of oscillation of an electrical circuit when accurate high frequency measurements are desired. In a wavemeter the variable element may be either the inductance of the exploring coil or the capacity of the condenser, but it is possible to obtain a continuous range of capacity variations in a more practical manner than could be accomplished by any variation of inductance alone.

When the inductance L in the wavemeter circuit is placed in inductive relation to any part of an active oscillation circuit, such as the closed or open circuit of a radio transmitter, radio-frequency currents are induced in the wavemeter. The wavemeter is tuned by the variable condenser to the frequency of the circuit under measurement, various devices being used to indicate maximum flow of current. When the exact point of resonance is found by varying the condenser, the indication is noted by either maximum deflections of a meter needle, maximum response in telephone receivers, or the maximum brilliancy in an indicating glow lamp (neon tube).

Wavemeter Indicating Devices (Frequency Meter).—It is desirable that the determination of resonance in the wavemeter be measured by a recording instrument rather than with telephone receivers, inasmuch as the human ear cannot distinguish the point of maximum loudness of sound waves within an accuracy of perhaps 10 to 25 per cent. This discrepancy is too great for precise measurements.

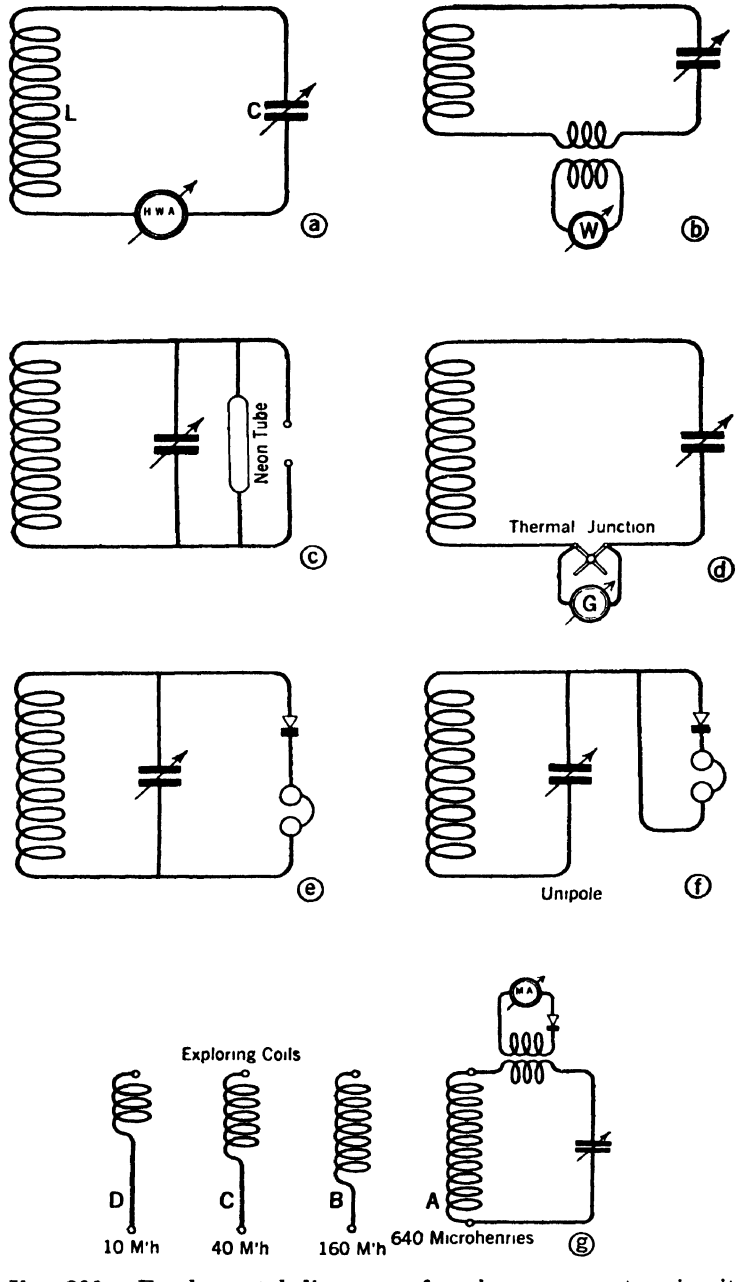

FIG. 290.—Fundamental diagrams of various wavemeter circuits.

In drawing *a* of Fig. 290, a milliammeter with a range of zero to 200 milliamperes is arranged in series with the wavemeter circuit for determining the maximum current flow. This meter is of the hot-wire type, operating on the principle of the expansion and contraction of a wire when currents of different intensities flow through the circuit.

In drawing *b*, Fig. 290, a small wattmeter with a range of .01 to 0.1 watts is connected in series with the secondary winding of a small step-down transformer while the primary is in series with the wavemeter circuit.

In drawing *c*, Fig. 290, a small glow lamp containing neon gas is connected in shunt with the wavemeter circuit. The lamp glows brightest when the resonant adjustment of the circuit is obtained by varying the capacity of the wavemeter condenser. It is always necessary to hold the wavemeter in a fixed position relative to the circuit under test. The neon tube is a convenient device for indicating the presence of radio waves and it is often used in the calibration of short wave transmitters. This gas has also been found useful in automobile ignition work. A glass pencil or tube filled with neon gas glows with a soft pinkish hue when held near the active high tension secondary ignition wires. The gas molecules are ionized by the action of the high frequency energy.

In drawing *d*, Fig. 290, a thermo-couple junction is shown in series with the resonant circuit. The terminals of the thermo-couple are joined to a sensitive millivoltmeter which may be calibrated in milliamperes. When high frequency current flows through a junction consisting of two dissimilar metals the heat produced generates an electromotive force. Direct current flows through the meter windings under the e.m.f. produced at the junction. The scale on the meter is divided into arbitrary units. The readings do not denote values of actual current flowing in the wavemeter circuit.

In drawing *e*, Fig. 290, a rectifying crystal detector is connected in series with high resistance telephone receivers of approximately 1000 to 2000 ohms. The maximum of sound is obtained in the telephone when resonance is established. It is to be understood that when phones are used in a wavemeter circuit a straight c.w. signal will not be heard.

Drawing *f*, Fig. 290, indicates that the uni-pole system of connection is often preferable because the calibration of the meter is not affected by the presence of the detecting circuit when shunted around the oscillatory circuit as in drawing *e*. The disadvantage of this circuit is that the wavemeter must be placed in close inductive relation to the circuit under test, and this makes it somewhat difficult to obtain a well-defined maximum sound in the receivers.

Drawing *g*, Fig. 290, illustrates a wavemeter circuit in which the inductance is variable in four steps by interchanging one of the four exploring coils which are designed with suitable prongs to be plugged into the wavemeter circuit. The condenser, as stated before, is continuously variable from zero to maximum.

Uses of the Wavemeter.—The wavemeter is employed when it is desired:

(1) To place two or more radio-frequency circuits in resonance.
(2) To measure the wavelength of the open or closed oscillation circuits of a transmitter.
(3) To determine the percentage of coupling between the open and closed circuits of a spark transmitter.
(4) To determine the decrement of damping of spark energy.
(5) To calibrate the tuned circuits of a receiving set by means of a modulated oscillator or a buzzer excited oscillatory circuit, both of which are described in detail elsewhere.
(6) To assist in plotting a resonance curve of the wave radiated from the antenna and in determining the purity and sharpness of that wave.

General Instructions in the Use of a Wavemeter.—To illustrate the principle let us suppose the natural wavelength of the antenna shown in Fig. 291 is to be measured by the use of a wavemeter employing telephone receivers. The secondary S of an induction coil fitted with a vibrator is connected to the antenna and ground circuit across the spark discharge gap G in the manner illustrated. The wavemeter circuit consists of inductance L, variable condenser C, a crystal rectifier D, and head telephone receivers P.

The induction coil is set into operation by connecting the primary to some source of direct current. The vibrator contact points will open and close rapidly in a manner similar to that of a buzzer action producing an intermittent flow of current in the primary winding.

The rise and fall of the magnetic flux in the iron core of the induction coil will act on the secondary turns S and induce therein an alternating e.m.f., whose frequency is that of the vibrator armature.

It is seen that the open gap G is in series with the aerial circuit, hence each alternation of induced e.m.f. in S results in a spark discharge across gap G. This method of exciting the antenna circuit is known as the *plain-aerial spark discharger.* The open circuit embodies the inductance of all the conductors and the distributed capacity between antenna and ground. It may be observed that the e.m.f. generated in S will charge the antenna circuit in exactly the same way a condenser

would be charged if the latter was connected across S of the induction coil. The antenna is set into excitation in this way and groups of oscillations will then traverse the open circuit at a frequency determined by the distributed inductance and capacity values of the antenna system.

A wave motion is propagated from the antenna at a frequency of

$$f = \frac{1}{2\pi\sqrt{LC}}$$

Now if the coil L of the wavemeter is placed near the ground lead in correct inductive relation to the antenna wire, oscillations of maxi-

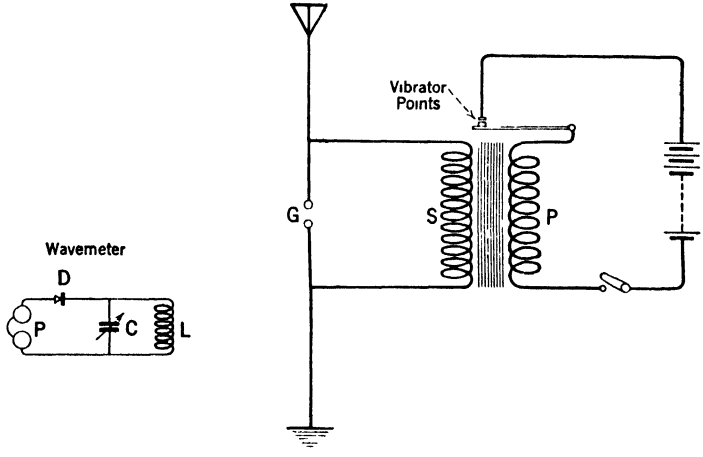

FIG. 291.—How an antenna system may be set into excitation for the purpose of measuring its fundamental wavelength by means of a wavemeter.

mum amplitude will be induced in the wavemeter circuit only when the antenna and wavemeter circuits are adjusted to exact resonance. During the spark discharge across the gap G, the capacity of the wavemeter condenser is varied until a clear distinct note is heard in the telephone head-set. The wavelength of the antenna circuit under test is then determined by the reading of the scale underneath the pointer of the condenser. Usually, the sounds caused by the action of transformer induction can be heard over the entire condenser scale, but the observer should take care to distinguish between the currents induced in the wavemeter by the radio-frequency oscillations flowing in the antenna circuit and those set up by the inductive action of the coil.

The radio-frequency oscillations produce a distinct sound in the

telephones which can be readily tuned in and out on some point of the condenser scale. Generally, the condenser adjustment determining resonant frequency between the two circuits is sharply defined, which means that the signals can be made to disappear for a slight change in wavemeter capacity C.

The crystal detector D rectifies the groups of radio-frequency oscillations, giving one deflection of the telephone diaphragms per group. Thus, if the vibrator is adjusted to a low frequency acutely responsive to our sense of hearing, for example, in the vicinity of 800 to 1000 cycles, a more accurate reading can be obtained. It may be necessary to place a wavemeter, when employing a sensitive crystal rectifier, 100 ft. or more from the antenna when measuring the fundamental wavelength.

It should be remembered that the exploring coil of the wavemeter must be moved, or shifted in various positions, until it bears the correct inductive relation to the antenna.

Since the antenna is radiating the same energy that the observer is receiving on the wavemeter circuit, consideration must be given to the interference which may be set up in nearby receiving sets. This outline only covers the simple use of a wavemeter.

General Instructions for Tuning the Open and Closed Oscillating Circuits of a Spark Transmitter.—The following wavemeter measurements must be taken in order to calibrate a radio transmitter to the standard wavelengths assigned:

(1) The wavelength of the closed primary oscillation circuit.
(2) The wavelength of the open antenna circuit.
(3) The wavelength of the radiated wave.

It will be shown that the radiated wave may have slightly different characteristics, after the open and closed circuits have been coupled, than either the primary or secondary taken individually. Therefore, in the measurement of damped radio-frequency oscillations we must determine:

(1) The decrement of damping.
(2) The sharpness and purity of the radiated wave.

The Antenna Circuit.—The open circuit may be set into excitation for measuring its natural or fundamental wavelength by other methods than described in connection with Fig. 291. In Fig. 292 a buzzer excitation circuit may be inductively coupled to an antenna system. The practical use of such a circuit will require that the buzzer circuit possess sufficient power to energize the antenna. The transformer $P\,S$ con-

sists of only a very few turns of wire, in order to transfer energy through the magnetic coupling from the buzzer circuit. The buzzer must be of the high frequency type and adjusted to produce clear tones in the wavemeter when the latter is fitted with a crystal rectifier and phones. The wavemeter is placed in inductive relation to some part of the antenna circuit, and the high frequency oscillations emitted by inductance L_1 are picked up by the exploring coil L of the wavemeter when the condenser has been adjusted to resonance.

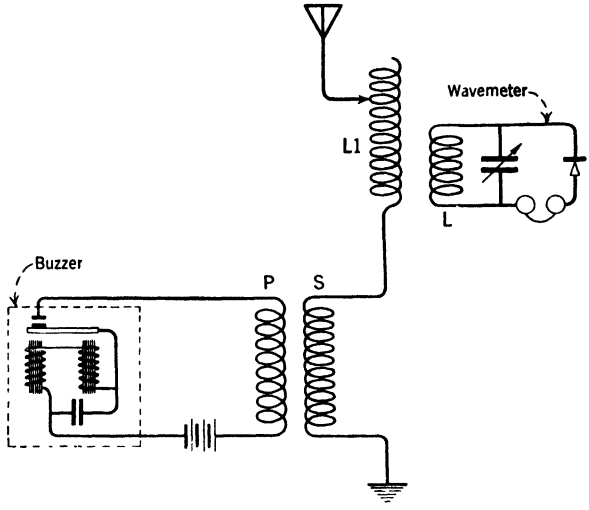

Fig. 292.—An antenna system may be energized by a buzzer circuit and the wavelength measured with a wavemeter.

The buzzer circuit is not tuned to any period of vibration, but merely induces a series of groups of damped high frequency oscillations in the antenna circuit. The antenna circuit could be excited by connecting the buzzer vibrator across the inductance L_1, but this direct-coupled method is not as satisfactory as the inductive method shown in Fig. 292.

The antenna circuit is tuned according to the foregoing diagrams, to the standard wavelengths. More or fewer turns are used in the loading or tuning inductance until the wavelength indicated by the wavemeter is that required for the standard wavelength assigned. There is no difficulty experienced with the average length of a ship's antenna in obtaining a wavelength of 600 meters or more. The 300 and 450 meter waves for commercial work have been abolished on American vessels, because they interfere with the broadcasting programs.

If one of the working waves is below the fundamental of the antenna, a series condenser is then employed. The correct number of turns for any assigned wavelength must be found by trial adjustment of the inductance L_1 of the antenna circuit.

The Closed Circuit.—In Fig. 288 it is shown how the wavelength of a closed oscillation circuit of a spark transmitter is measured by placing

the wavemeter in inductive relation to the primary winding L_1 of the oscillation transformer. The secondary circuit of the oscillation transformer (not shown) must be disconnected or opened at the inductance in order that the antenna may not be set into excitation. When an alternating current of high voltage charges condenser C_1, a spark discharge will take place at the quenched gap and oscillations will surge back and forth through inductance L_1 at the frequency or wavelength determined by the values of capacity C_1 and inductance L_1.

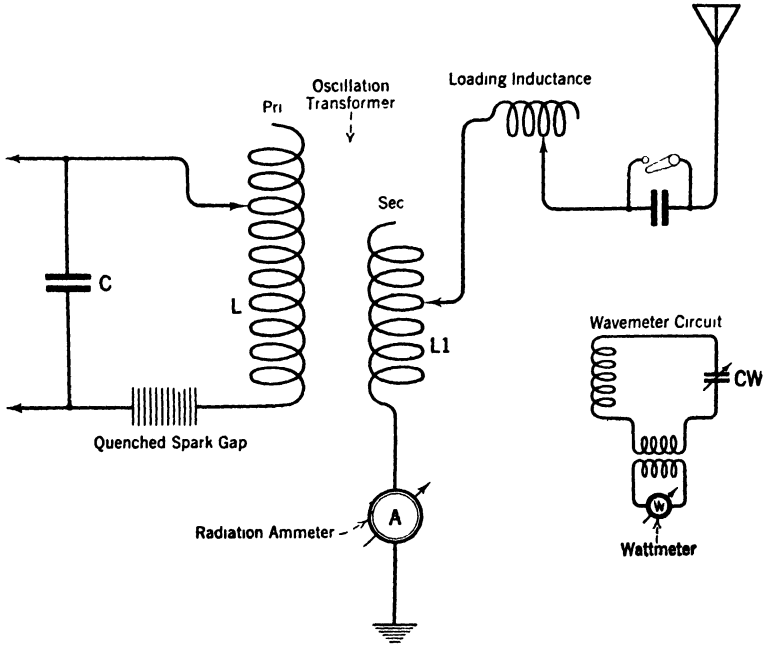

FIG. 293.—A wavemeter is placed in a suitable position near a transmitter antenna circuit to measure its wavelength.

For example, if a wavelength of 600 meters is desired, the wavemeter condenser dial should be set on the division mark " 600 " on its scale. Since the adjustment of the capacity is fixed in the bank of condenser C_1 for normal wavelengths, the circuit is tuned to the required wavelength by connecting the variable clip at various points on inductance L_1 until the required wavelength is found, which will be indicated by maximum deflection of the galvanometer needle.

Radiated Wave.—When the open and closed circuits are excited individually, and the wave of each is determined by resonance with the wavemeter circuit, it is found that all the energy is radiated practically

at one wavelength. However, when the antenna circuit is again connected in the proper manner, and power is furnished to the primary circuit, and both circuits are coupled inductively through L and L_1, as indicated in Fig. 293, oscillations will be produced in the antenna circuit at more than one frequency. This is due to the mutual coupling between the two circuits wherein the magnetic field of one reacts upon the magnetic field of the other.

The purity and sharpness of the wave emitted must conform to the United States Government requirements. *The radiated wave is considered as being pure when the amplitude of the energy in any lower wave is not more than* 10 *per cent of the energy in the greater wave,* the latter in every case is always the wave upon which transmission is carried on.

The production of two waves is caused by the mutual inductance between the circuits being subtracted from the actual inductance of the primary, thus decreasing its wavelength, whereas this mutual inductance is added to the mutual inductance of the secondary, and its wavelength is increased.

Tuning the Spark Transmitter.—The process of tuning any set is quite similar to the foregoing if we keep in mind the following important facts:

(1) A critical degree of coupling between the primary and secondary windings of an oscillation transformer gives the maximum antenna current for any particular wavelength adjustment of the transmitter.

(2) The coupling between the primary and secondary coils can be varied by an increase or decrease of the inductance of either coil, as well as by changing the relative distance or position between the coils.

(3) The coupling for the quenched spark discharger can be closer than for the rotary type discharger, providing the quenched gap is in perfect condition. The panel sets are equipped with a wavelength changing switch, which, in one simple operation, permits any of the standard wavelengths to be radiated, because the necessary changes of condenser capacity, self-inductance of the open and closed circuits, and the coupling are all selected by a set of switch blades making contact to switch studs which connect to various parts of the circuit. The open and closed circuits of the transmitting set can be tuned to resonance as follows:

The closed oscillation circuit of Fig. 293 is set to a definite wave (any one of the standard waves), by use of the wavemeter. Next, place the secondary winding of the oscillation transformer in inductive relation to the primary winding. The proper antenna tuning inductance is now found by cutting in and out turns of this inductance until the antenna ammeter indicates maximum current. Knowing the wave-

length of the closed circuit, setting the open circuit in resonance to it by this method indicates the wavelength of the radiated energy, but does not show whether the wave emitted complies with the law in respect to sharpness and purity. This can be determined by plotting a resonance curve or by the use of the decremeter.

When the quenched discharger is used, the primary coil is set in a fixed mechanical position to the secondary coil, whereas these windings are so constructed that they can be drawn apart when the rotary gap is used. In other words, we can use tight coupling for the quenched gap and loose coupling for the rotary gap.

The secondary inductance must always have the proper number of turns to secure a maximum transfer of energy to the open circuit, which will be indicated when the highest possible reading of the ammeter is obtained. Therefore the process of tuning is more or less one where approximate adjustments are first secured, which we call *rough tuning*, followed by the more precise adjustments called *fine tuning*.

The location of the secondary clips is found by turning the coupling handle on the front of the panel set, thereby mechanically placing the primary winding closer to or farther away from the secondary.

For example, if the primary is moved away from the secondary and the antenna meter shows a current increase, it is an indication that the coupling of the windings is too close or too tight. The primary winding then should be moved back to its original position, and turns taken out at the secondary by changing the contact clips. This decrease of inductance in the secondary of the oscillation transformer must be followed by increasing the inductance of the antenna loading coils, called *antenna tuning inductances*. These adjustments are made until resonance is again established between the circuits, which will be noted when the maximum value of antenna current is secured.

The complete tuning process can be carried out by observation of the antenna ammeter after the wavelength of the primary is once established, but the wavemeter, or decremeter, should always be employed to measure the decrement, noting whether two waves are being radiated, and the respective amplitude strength of each, for compliance with the government regulations.

Radiation and Point of Coupling.—In the quenched spark transmitter, two or more points of coupling are frequently found for one given wavelength which give a maximum reading of the radiation ammeter. When changing from one wavelength to another by means of the wave-change switch, it is found that the antenna current may be greater for one wave than another.

The proper point of coupling between the primary and secondary of the oscillation transformer should be set for maximum antenna current on the *calling wave* of the transmitter.

The following chart shows the antenna current at different degrees of coupling for two wavelengths of a certain spark transmitter operated on reduced power. The best point of coupling, in this instance, is 70 deg., as determined by the average maximum antenna current for the two given wavelengths:

DEGREE OF COUPLING

Wavelengths (λ)	0	10	20	30	40	50	60	70	80	90	100
	amp	amp	amp.	amp	amp.	amp	amp.	amp.	amp.	amp.	amp.
600	2 2	2 4	2 5	2 6	2 7	2 7	2 8	3 0	2 2	2 2	2 0
706	2 2	2 3	2 5	2 6	2 8	2 8	2 9	3 0	2 5	2 2	2 0

The values marked on the chart show that for each wavelength the antenna current increases as the coupling is gradually closed, up to 60 or 70 deg., and as the coupling is further tightened by drawing the coils closer together, the antenna current decreases.

This tabulation should receive careful consideration, because it bears out the fact that there is an *optimum* or *critical* point of coupling between the primary and secondary coils of a transformer. We can go beyond that point by tightening the coupling, and it is seen that the circuits are no longer in absolute resonance. This is because the coupling is so close that the magnetic fields produced around both coils interact upon one another to such a marked extent as to change the self-inductance of both the primary and secondary circuits.

The interaction of the magnetic fields of the two circuits is called *mutual inductance*, which is seen to increase in its effects as the coupling is tightened between any two magnetic circuits.

Coupling.—The coupling between the open and closed oscillatory circuits of a spark transmitter is generally determined by placing the wavemeter in inductive relation to the antenna and observing the length of the radiated waves when more than one wave is present. If the readings of the longer and shorter waves are squared and their values inserted in the following formula, the coupling K is obtained, or:

$$K = \frac{\lambda 2^2 - \lambda 1^2}{\lambda 2^2 + \lambda 1^2}$$

where $\lambda 2$ = longer wave (base or resonant wave)[1]

$\lambda 1$ = shorter wave (not the communicating wave).

The true coefficient of coupling is obtained from the following formula:

$$K = \frac{M}{\sqrt{L_1 L_2}}$$

where M = mutual inductance of the oscillation transformer;
L_1 = self inductance, primary;
L_2 = self inductance, secondary.

When an antenna oscillates at two frequencies simultaneously, two resonant adjustments will be observed on the wavemeter, and when the latter is equipped with a wattmeter for determining resonance, the relative amplitude of the two frequencies can be measured by the deflection of the indicating needle by carefully tuning the wavemeter circuit. The relative power at the two frequencies of oscillation may be plotted into a resonance curve, a description of which is given in subsequent paragraphs.

According to the United States Regulations, a *pure wave is defined as one in which, if the antenna oscillates at two frequencies, the energy of the lesser wave will not exceed by* 10 *per cent the energy in the greater wave.* The spark transmitter circuits which we are assumed to be measuring emit groups of damped oscillations, and according to the governmental regulations *a sharp wave is one in which the decrement of damping per complete oscillations is* 0.2, *or less.* The measurement of the decrement is described in another paragraph.

Plotting a Resonance Curve.—When an oscillatory circuit emits radio-frequency oscillations, the frequency of which can be measured by a wavemeter, it will be found that the energy of the radiated wave is distributed between a band of frequencies or wavelengths at or near the fundamental frequency. The relation between the amplitude of the alternating current or power expended and its distribution over this frequency band may be plotted into a curve. The practical value of the curve lies in the fact that it provides a visual means for determining three very important factors: (1) the overall distribution of energy in the emitted wave, (2) the decrement of damping, and (3) the relative power of two waves if both are present.

In the following explanation let us employ the decremeter, illustrated in Fig. 294, simply as a wavemeter.

[1]The base or resonant wave is the one which is assigned to carry on radio communication.

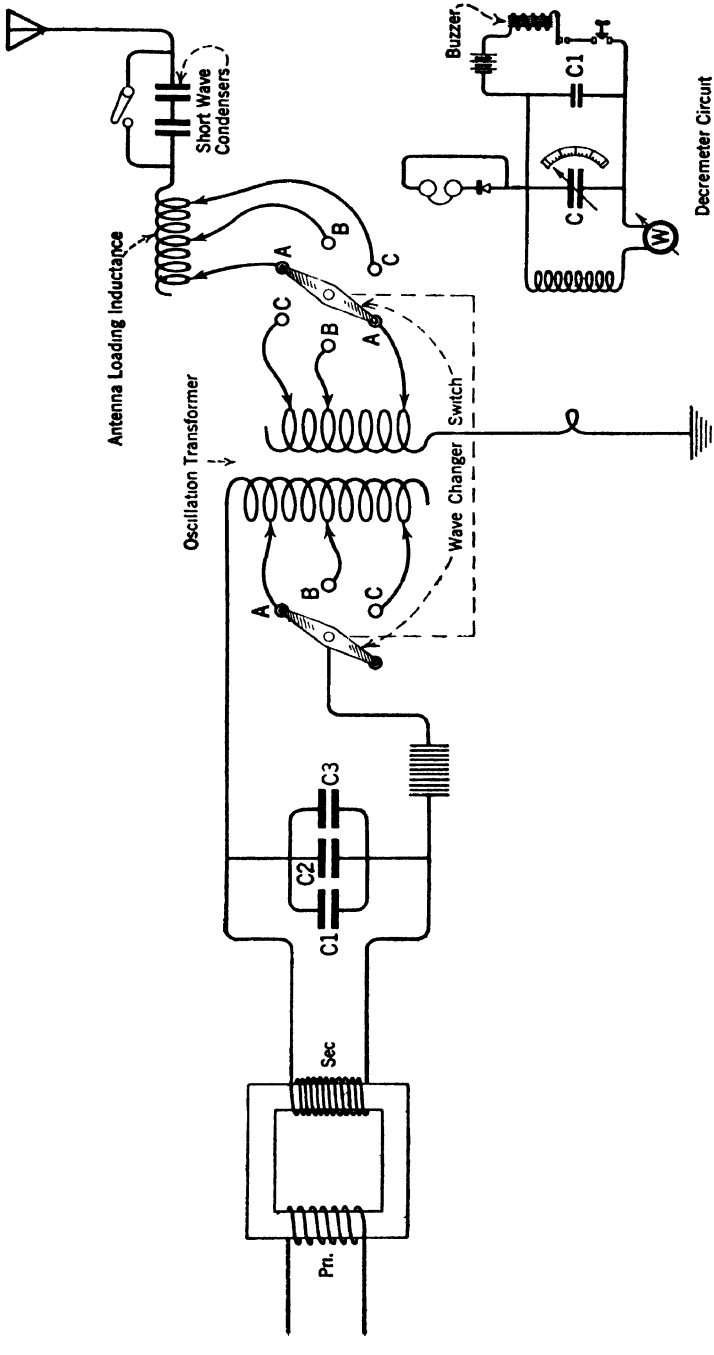

FIG. 294.—Showing the use of a decremeter to measure or indicate characteristics of the emitted wave of a spark transmitter.

It is necessary to employ a wavemeter with a hot-wire wattmeter, or hot-wire milliammeter, as the device for indicating resonance. The milliammeter should have a range of at least 100 milliamperes, whereas the full scale of the wattmeter will read 0.1 watt. The values are arbitrary, and under the discussion of wavemeters it was stated that a wattmeter connected to the secondary of a step-down transformer, the primary of which is in the circuit of the wavemeter, is more desirable for this work.

When a wave is emitted which does not conform with the requirements of a *sharp* and *pure* wave, it is called a *broad* wave, and causes interference in receivers not tuned to receive its signals. The effect on the receiver dials is illustrated in Fig. 218. The complete circuit for plotting a resonance curve is shown in Fig. 294. A few preliminary readings must be taken of the transmitting circuit under measurement, beginning with the wavemeter held at a safe distance to prevent excessive induced current from burning out the wattmeter at the point of resonance. The proper inductive relation is obtained when a maximum deflection at the point of resonance is indicated on the wattmeter. When readings of a properly adjusted transmitter are observed, and if two points of resonance are found, the wattmeter should show only a small scale deflection of 1/10th or less of the maximum deflection. The curve is derived from the data obtained, when a series of readings is taken, by moving the condenser dial of the wavemeter across the scale and observing the wattmeter deflection for each individual setting.

When this test is started, the position of the wavemeter and the power supplied to the transmitting circuit should not be changed.

If the coupling between the primary and secondary windings of the oscillation transformer of Fig. 294 is changed, the wave emitted will become sharp or broad when the coupling is either decreased or increased. Increased or tight coupling is obtained when primary and secondary are closely related. Decreased or loose coupling is obtained when the distance between the coils is increased.

Let us interpret a series of measurements into a resonance curve and from this curve determine the sharpness of the emitted wave plotting a resonance curve. Refer to Fig. 295.

With the transmitting circuit in operation, as in Fig. 294, the wavemeter (decremeter) condenser dial C is now moved across the scale until at 495 meters, let us say, a 0.05 point deflection of the hot-wire wattmeter is noted. As the pointer of the variable condenser is moved farther, the wattmeter reading increases, this time to 0.01, with the dial set at 525 meters. The current will always increase as the condenser dial approaches the point of resonance. When the resonant

point is passed and the condenser is rotated farther in the same direction, a decrease of current takes place. In other words, the current is maximum only when the circuits are in resonance. Therefore, before or after the resonance point the current in the wavemeter decreases. The wavelengths indicated by the wavemeter dial pointer and the corresponding deflections observed on the wattmeter over the series of readings, are plotted according to the graph illustrated in Fig. 295.

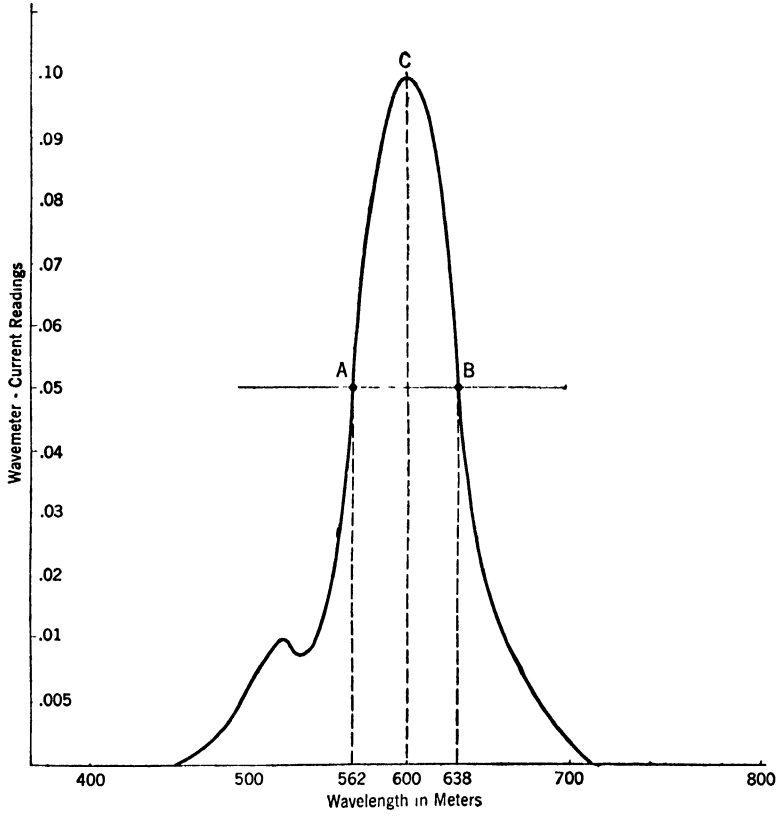

FIG. 295.—The characteristics of a sharp signal wave of a spark transmitter plotted into a resonance curve.

The wavelength readings corresponding to the condenser scale are to be marked in one column and the corresponding data obtained from the wattmeter in a second column. The cross-section or graph paper is ruled with horizontal and vertical lines forming squares. The wavelength readings are plotted on the horizontal lines known as the *abscissas*, and the current readings on the vertical lines known as the *ordinates*.

This conforms to the usual custom for plotting, wherein causes or time are plotted on the horizontal axis and results or energy changes are plotted on the vertical lines.

For the first reading taken at 495 meters, the vertical line corresponding to this wavelength will intersect the horizontal line corresponding to 0.005. A dot is to be placed at this location to represent one point of the curve. Each set of calibrations in the series is located by a dot in a similar way. A line drawn through and joining all the points is called the *resonance curve.* In this case a crest or small peak at 525 meters on the curve indicates the power in the lower or *non-resonant wave.* If a horizontal line were drawn from this peak it would intersect the wavemeter current ordinate at the value .01 which is shown on the scale. So far as the shape of the two waves is concerned, the upper peak at 600 meters (which is the resonant wave) and the lower peak at 525 meters (the second wave), indicate that the radiated wave complies with the government requirement regarding the relative amplitude strength of the lower wave, which must be 10 per cent or less than the energy in the upper wave. If any sharp or definite resonant point is indicated on the wavemeter at other than 600 meters, it would be due principally to excessive coupling at the oscillation transformer.

The wavelength and overall distribution of energy of oscillating currents in any open and closed radiative oscillatory circuit may be obtained in the manner described and the data plotted into a resonance curve.

The resonance curve of Fig. 295 indicates that considerable energy is radiated more than 20 meters to either side of the maximum amplitude of 600 meters.

In order to estimate the interfering qualities of this energy distribution, two points A and B are assumed at half the maximum amplitude, or 0.05 on the graph, and the waves above and below resonance, which would be included between A and B, represent the range over which the signals emitted by this transmitter would be distinctly audible at some certain distant receiving station as mentioned in foregoing paragraphs. It is obvious that a sharper curve than the one illustrated will reduce the strength of the signal heard to less than 20 meters on either side of the maximum. Therefore, resonance curves enable us to determine the ratio of current at the receiver for a given wavelength off the resonant point to that obtained at the resonant point. Sharper tuning will result when all of the energy is radiated near the resonant point.

Measurement of Logarithmic Decrement of Damping.—A spark transmitter radiates a series of oscillations called a *wave train,* as illus-

trated in Fig. 296. Each successive oscillation gradually diminishes in amplitude strength until the energy dies out and stops. The decrease in amplitude is called *damping*, and the current or wave is called a *discontinuous wave*. Due to the radiation of energy in the surrounding media and losses in overcoming the resistance of the circuit, each discharge has a maximum value a little less than the one preceding until the energy is totally dissipated. Energy is gradually extracted from the circuit for the following reasons:

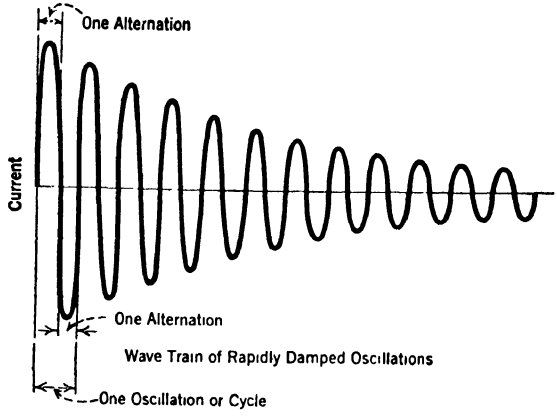

FIG. 296.—The curve shows how the oscillations of a damped wave gradually diminish.

(1) Radiation in form of electric waves.
(2) Resistance. This loss is in the form of heat (I^2R loss).
(3) Transfer of energy through the magnetic field by coupling at the oscillation transformer.

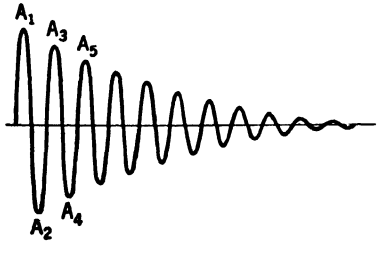

FIG. 297.

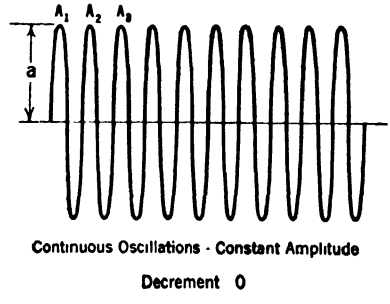

FIG. 298.

FIG. 297.—This curve shows the rapid diminishing of oscillations comprising a damped wave.

FIG. 298.—Continuous radio-frequency oscillations (undamped).

The decrease in amplitude of the oscillations is called damping. Damping is the decaying of oscillations in a wave train.

The degree of damping is shown by the decay or progressively diminishing amplitudes A_1, A_2, A_3, and so on, in the wave train of damped

oscillations illustrated in Fig. 297. The difference between the respective amplitude heights determines the ratio of damping, and this is called the *damping factor.* This ratio is conveniently expressed in mathematical terms of *logarithmic decrement.* Decrement, therefore, is the measurement of damping and indicates how many oscillations occur in a wave train before they are damped out.

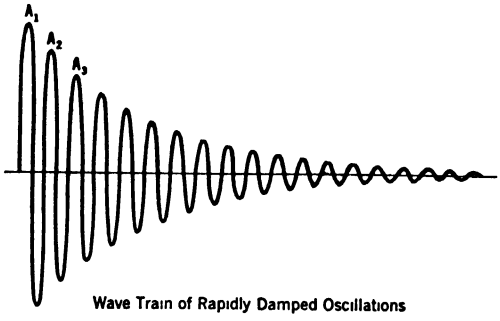

FIG. 299.—Observe how the amplitudes in a group of oscillations rapidly decrease in a damped wave of short duration.

If new energy is supplied to a circuit just sufficient to compensate for losses, the oscillations will be perfectly uniform or constant in amplitude, as shown in Fig. 298. (This type of energy is emitted by c. w. transmitters only.) When the amplitudes are constant as shown by the curve, the oscillations are called *continuous* and *undamped,* and since there is no ratio of decrease in the amplitude strength of the oscillations, the decrement is zero.

A highly damped circuit is one where the energy in the oscillations

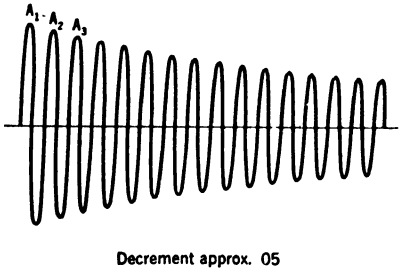

FIG. 300.

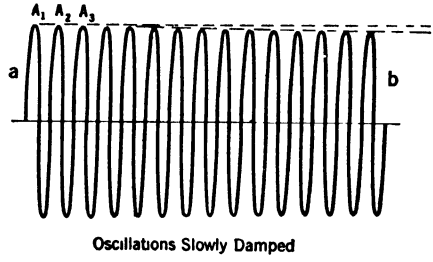

FIG. 301.

FIG. 300.—A curve illustrating how the amplitudes in a group of oscillations may gradually decrease in a damped wave.

FIG. 301.—A graphical representation of slowly damped oscillations.

is dissipated or removed from the circuit very rapidly, because: (1) the circuit may not be in resonance with the frequency of the impressed voltages—in this case the circuit reactance or opposition is large; (2) the ohmic resistance of the circuit may be high, causing much of the energy in the oscillations to be dissipated in the form of heat.

A group of highly damped oscillations is shown in Fig. 299, and

groups of feebly damped oscillations in Figs. 300 and 301. An alternating current flowing in an antenna or other oscillatory circuit following the cessation of an impressed voltage is called a *free alternating current*, and in the spark transmitter this condition is brought about by charging and discharging high voltage condensers. Each spark discharge creates a group or train of oscillations. The theory of how an electrical circuit oscillates is covered fully in a preceding chapter. The oscillations are assumed to decay or die away according to the law that the ratio of any oscillation to the one preceding it is a constant. In other words, referring to Fig. 303, the ratio of amplitude $\frac{A_1}{A_2}$ and $\frac{A_2}{A_3}$ and $\frac{A_3}{A_4}$ represents the *damping factor or damping constant*. The damping factor, therefore, is a constant ratio throughout the series of oscillations. The *Napierian* logarithm of the ratio, of the first to the second of two successive amplitudes in the same direction, is called the *logarithmic decrement*.

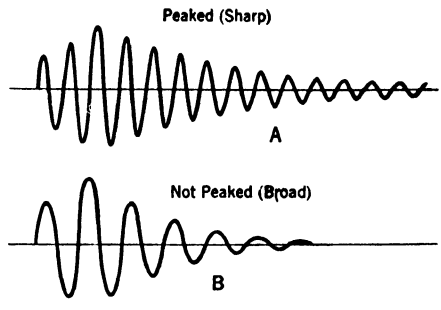

FIG. 302.—The purpose of curve *B* is to illustrate the broad (interfering) quality of a damped wave when compared to a non-interfering (sharp) damped wave as suggested by Curve *A*.

Suppose the ratio of amplitude $\frac{A_1}{A_2}$ is 1.22. This value then represents the damping factor, and, referring to the table of logarithmic decrements in the Napierian system, the factor 1.22 is interpreted as a decrement of 0.2. If we assume that the oscillations in a circuit are extinguished when the amplitude of the last oscillation is 0.01 of the initial oscillation, the complete number of oscillations, N, in a spark discharge can be calculated as follows:

$$N = \frac{\log \epsilon \frac{A_1}{A_x} + \delta}{\delta}$$

where δ = logarithmic decrement;
A_x = the amplitude of the last oscillation;
ϵ = base of Napierian system of logarithms.

Then $\frac{A_1}{A_x} = 100.$

The logarithm of 100 is 4.605, hence,

$$N = \frac{4.605 + \delta}{\delta}$$

In a group of oscillations where the decrement is equal to 0.1, then,

$$N = \frac{4.605 + 0.1}{0.1} = 47 \text{ complete oscillations.}$$

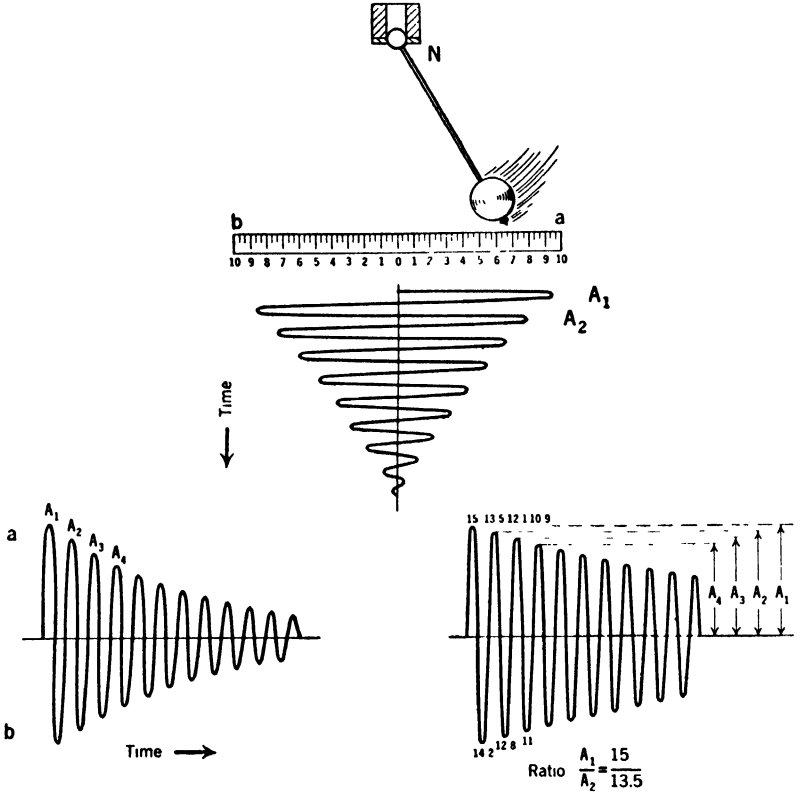

FIG. 303.—A swinging pendulum is a good analogy for demonstrating the principle of wave motion. The curves illustrate how the oscillations may continue for different durations of time. The decrease in the amplitudes of successive oscillations as shown by A_1, A_2, etc., follow a definite law.

If the oscillations in a given antenna circuit have a decrement of 0.2, the logarithm of the ratio of one amplitude to the next successive amplitude, that is the ratio of $\frac{A_1}{A_2}$ as shown in Fig. 303 will equal 1.22.

the logarithmic decrement corresponding to the ratio 1.22 is 0.2 as just mentioned. Hence the ratio $\frac{A_1}{A_2}$.

It has been found that a spark transmitter having less than about 24 complete oscillations for each spark discharge possesses interfering tuning qualities, and for this reason the United States Government enforces the conditions requiring the radiated groups of damped oscillations of the transmitter to be tuned to a decrement of 0.2 or less. A single group of damped oscillations is depicted in Fig. 299. These curves show that when the energy of the radiated wave is largely confined to a single frequency resulting in sharp tuning, the receiving apparatus can be carefully tuned to resonance with the distant transmitter.

When the conditions are as shown in Fig. 297, the radiated wave is said to have *high* or *excessive damping,* because the transmitter is broadly tuned. The reason is that the peaks or crests of the oscillations are broad in a highly damped group, whereas the amplitude peaks become sharper as the damping decreases (see Fig. 302). The terms *high damping* and *low damping* are comparative. However, since the government has defined its regulations as to what constitutes a non-interfering wave, it can be said that any spark transmitter radiating about 24 complete oscillations per wave train group or more, is *sharply tuned,* and less than that number, *broadly tuned,* or *highly damped.*

Referring to the resonance in curve in Fig. 295, the practical application of the measurement of damping is evident. This curve shows that if most of the energy is radiated at or near the resonant-signaling wavelength, indicated by point *C,* very little energy can be radiated at other wavelengths which might cause interference in receivers not tuned to this frequency.

To illustrate the exact meaning of high damping and low damping, let us consider the oscillating movements of a pendulum. In Fig. 303 the pendulum is illustrated attached to bearing *N.* The pendulum, when drawn to the right-hand side and released, will swing to and fro, completing a series of oscillations which gradually damp out. Let us assume that for the initial movement in a direction toward the right, according to the calibrated scale in inches, the pendulum moves from zero position or rest outward to a certain distance to the right. This direction may be arbitrarily called the positive side. When released the pendulum will swing toward the opposite (left side) called the negative side. In returning to the right the pendulum will not travel as far as the initial swing. Hence, the swing of the second oscillation being

less than the initial oscillation may be represented by the difference between A_1 and A_2 on the curve showing this motion. The ratio $\frac{A_1}{A_2}$ equals the ratio at which the oscillations are decaying. This ratio will be constant to the end of the swings which the pendulum undergoes, because it is a law of all mechanical oscillating motions that the oscillations die away at a constant ratio in all successive amplitudes. When a condenser discharges in a transmitting circuit to set up groups of damped oscillations, this constant ratio in successive amplitudes is assumed to exist. The mechanism of a pendulum could be constructed so that a given number of oscillations per group could be obtained. In the case cited, we have indicated 9 oscillations occurring in a given time, let us say, in 9 seconds. The *time period* then of one oscillation in the group is 1 second.

If the friction at the pivot point could be materially reduced by arranging a different length and weight of the pendulum, a greater number of oscillations would take place in a given time, as depicted by the lower curves in Fig. 303. When it is said that the oscillations are highly damped, it is meant that the pendulum will stop in a much shorter period of time than usually.

In another example of mechanical motion, which is illustrated in Fig. 304, a piece of cardboard is attached to the wire suspending the pendulum. Let us assume that the pendulum is now drawn from the zero position outward to a distance of 7 in., indicated by the amplitude A_1. When released, the pendulum upon completion of the first oscillation will swing back only to perhaps 5 in., due to the added wind resistance of the cardboard. This time the swing of the second oscillation is 2 in. less than the initial oscillation, as shown by amplitude A_2. If we observe the length of the successive swings, a group of decaying oscillations will bear the ratio of the amplitude of the first, A_1, to the amplitude of the second A_2, or $\frac{A_1}{A_2} = \frac{7}{5}$. It can be readily seen that fewer oscillations now occur than when the pendulum

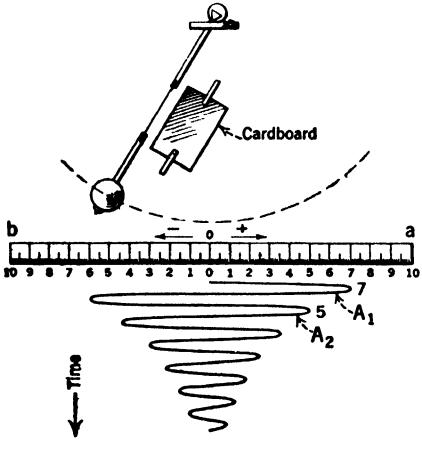

FIG. 304.—A mechanical analogy illustrating the principle of the rapid damping of a series of oscillations.

was oscillating without the cardboard as in Fig. 303, the damping being thus increased.

From the above experiments we find that slow damping corresponds to a greater number of swings of the pendulum, whereas rapid or high damping corresponds to a small number of swings of the pendulum. In this mechanical motion we could take the ratio of the amplitude of any two oscillations and call it the *damping factor* or *damping constant*; and, by referring to the table of logarithms in the Napierian system, the logarithm of the damping factor would equal the logarithmic decrement.

In Fig. 300 the decrement of the oscillations in the antenna of a spark transmitter is given at 0.05 per complete cycle, hence the number of complete oscillations in a group for each spark discharge can be computed by the equation previously given, that is,

$$\frac{4.605 + 0.05}{0.05} = 92 \text{ complete oscillations.}$$

To Find the Decrement of a Transmitted Spark Wave.—It will be evident upon referring to Fig. 295 that the resonance curve of a spark transmitter is not always symmetrical. Therefore, different values for the decrement will be found, depending upon which side of the maximum ordinate the measurements are taken. The maximum ordinate in this instance is the vertical amplitude erected at 600 meters. Since there is a distribution of current throughout the wave, a mean or average value must be found, and this average value is taken above and below resonance at points A and B, which correspond to one-half the maximum value indicated in the meter at the point of resonance C.

In order to obtain a convenient deflection of the decremeter which will give us some even number, say 0.1 watt at resonance and 0.05 watt at one-half resonance, the decremeter must be moved about so that the coupling between it and the antenna circuit under measurement will give us these desired current values. The decremeter circuit and its relation to the antenna system illustrated in Fig. 294.

In order to derive the curve in Fig. 295 the condenser of the decremeter is set at 562 meters to give a reading on the wattmeter of 0.05. We will call this particular point A the *lower value of capacity* one-half before resonance, inasmuch as the wattmeter current indication is one-half that obtained at the point of resonance. The condenser dial is rotated beyond resonance until the reading of the wattmeter again falls to 0.05 watts, at B, indicating a wavelength of 638 meters. This is the wavelength of the radiated energy one-half of the maximum meter reading beyond resonance.

The power expended in the radiated wave from point A, 562 meters,

thence to C, 600 meters, and to B, 638 meters, is applied to the formula to measure the combined decrement of the two circuits. The combined decrement is the sum of the circuit under measurement and the decremeter circuit.

Let δ_1 = the decrement of the circuit under measurement;
δ_2 = the decrement of the decremeter or wavemeter;
λr = the wavelength when condenser C is set at the resonant point;
λ_1 = the lower wavelength indicated by the condenser setting where the reading of the wattmeter falls to one-half that obtained at resonance or λr;
λ_2 = the wavelength at the detuned position of the long wavelength side of resonance indicated by the condenser setting, where the reading of the wattmeter again falls to one-half that obtained at resonance.

In terms of wavelength indicated by the wavemeter, the formula for the mean value of the decrement may be written:

$$\delta_1 + \delta_2 = \pi \times \frac{\lambda_2 - \lambda_1}{\lambda r}.$$

The decrement value of the decremeter δ_2 is subtracted from the total decrement obtained after solution of the formula and the result will give the decrement of the transmitting circuit under measurement or δ_1. The decrement of the meter itself is always marked on the instrument.

Direct Reading Kolster Decremeter.—The Kolster decremeter is used by United States Government radio inspectors. Photographs of the type D Kolster decremeter are shown in Figs. 304*a* and 304*b*.

The operation of the Kolster decremeter is as follows: The decremeter is essentially a wavemeter having its dial connected to the movable plates of the variable condenser. The dial is fitted with a scale of decrements instead of the usual wavelength or frequency scale. The decrement of the oscillatory circuit under measurement is obtained by setting the condenser dial of the decremeter at zero, and then moving this dial until both circuits are tuned to resonance, indicated by the maximum reading of the wattmeter. The condenser dial is then moved to a position where one-half resonance current is obtained; that is, the maximum current reading falls to one-half of that at resonance. The decrement scale is now clamped to the dial of the condenser, setting the decremeter scale opposite the zero mark. This time the dial with the decremeter scale rotating with it, is turned first to the point of reso-

nance and then to a point one-half beyond resonance, where the reading of the wattmeter again falls to one-half that obtained at resonance. The decremeter dial will give a direct reading indicating the combined decrement of the decremeter and the circuit under measurement. The decrement of the decremeter is marked on the instrument. This value is subtracted from the decremeter reading thus obtained. The difference between these values is the decrement of the circuit under test.



FIG. 304*a*.—The type D Kolster decremeter. One of the exploring coils is shown mounted in position.

The distance across the decremeter scale from zero to any given division on the scale is an indication of the band of wavelengths over which interfering signal energy is spreading. The decremeter may be used for calibration purposes by closing the switch operating the buzzer circuit.

A detailed description of the Kolster decremeter is given in the Bureau of Standards Bulletin 74.

Coupling.—When two circuits are related so that one circuit supplies or transfers energy to the other, the method of coupling the circuit may take on different forms. The adjustment of the coupling between a closed and an open or antenna circuit is critical because, if the circuits are closely related, oscillations of two frequencies will be radiated by the antenna, as illustrated by the resonance curve, Fig. 295.

Types of Coupling.—The usual types of coupling are:

(1) *Auto Transformer Coupling.* Two resonant circuits are illustrated in Fig. 305*a*. Let us suppose the oscillatory circuit L_1C_1 is furnishing power and generating oscillations at a definite frequency. The

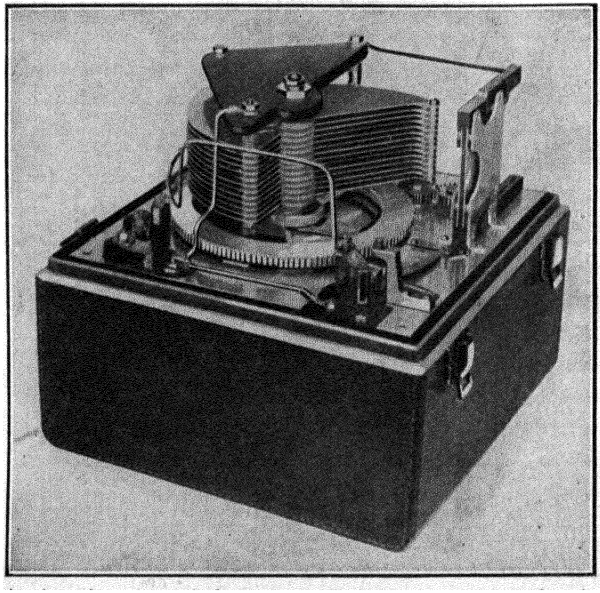

FIG. 304*b*.—An interior view of the type D Kolster decremeter showing the tuning condenser and other elements.

oscillating magnetic field set up around inductance L_1 cuts through the turns in inductance L_2, inducing an electromotive force in L_2 at a similar frequency. The maximum electrical disturbance is set up and oscillating currents reach greatest amplitudes in circuit L_2C_2, when both L_1C_1 and L_2C_2 are tuned to equal resonance. If L_2C_2 represents an actual antenna or open circuit, then high frequency radio waves will be radiated. The primary circuit furnishes the driving power, the energy being transferred from this circuit to the secondary through the medium of the magnetic lines of force. This type of coupling is called *auto transformer* because a certain portion of a single winding or inductance is common to both circuits.

It is seen that the primary and secondary circuits are physically or electrically connected.

For example, the turns of wire included between *A* and *B* supply the primary inductance, and the turns between *C* and *B* the secondary. The auto transformer type has been abolished for coupling purposes in the antenna of transmitters.

(2) *Transformer Coupling.* When two oscillatory circuits are entirely independent and separated, the transfer of energy from one circuit to the other is due to electromagnetic induction. Refer to Fig.

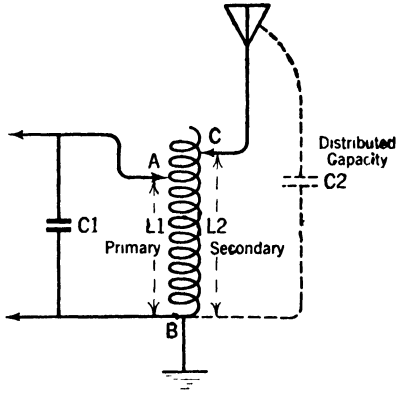

FIG. 305*a*.

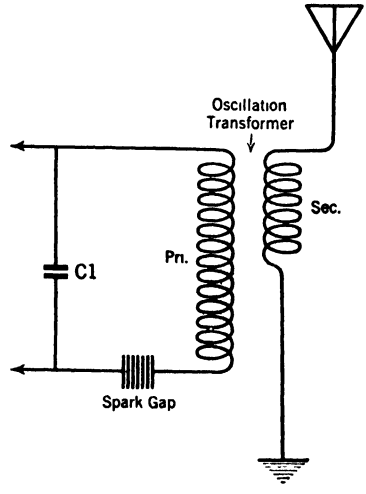

FIG. 305*b*.

FIG. 305*a*.—This diagram shows one form of conductive or direct coupling (auto transformer).

FIG. 305*b*.—This diagram shows inductive or indirect coupling between two oscillatory circuits.

305*b*. If the primary circuit oscillates at a definite frequency, the e.m.f. induced in the secondary will cause oscillating currents to flow in the latter at a similar frequency if they are in resonance. Transformer coupling is employed in the antenna systems of modern transmitters.

(3) *Capacitive Coupling.* When radio power is transmitted from primary to secondary entirely through the medium of the electrostatic field in a condenser, this method is called *capacitive coupling.* How two circuits are coupled through a condenser is shown in an elementary manner in Fig. 306. A condenser, when charged by an electromotive force from one circuit will give of its energy in the form of an electromotive force applied to a secondary circuit, the condenser acting to

couple the circuits together. This type of coupling is particularly convenient in vacuum tube circuits.

Close or Tight Coupling. The degree of coupling involves the effects of damping where the amount of radiated energy and the sharpness and purity of that energy determines the interference set up in receivers of stations not tuned to receive the signals. The graph of Fig. 307 illustrates three resonance curves showing the effect on the radiated wave by progressive reduction of the coupling at the oscillation transformer. Refer to the transmitter circuit in Fig. 305*b*. The oscillating current in the primary sets up a changing magnetic field which threads the secondary turns, inducing an oscillating current therein. The induced current in turn sets up its own independent magnetic field, transferring energy back to the primary circuit—the one which furnished the original power. This retransfer of energy decreases the available energy for radiation, and lowers the efficiency of the transmitter. The damping of the oscillating currents is increased by a condition of excessive coupling. This is shown by curve *a*, Fig. 307. The circuit is radiating at two principal wavelengths, neither of which is the natural or resonant wavelength of the circuit.

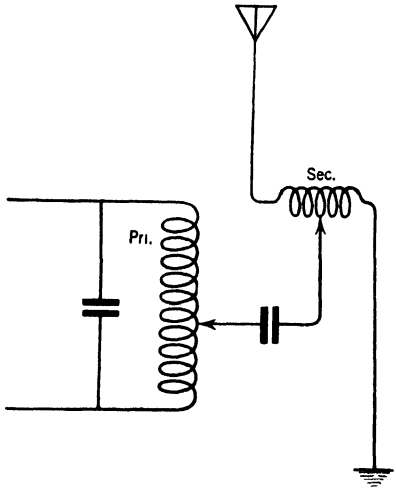

Fig. 306.—The diagram shows one use of a coupling condenser. Refer to Fig. 265 showing capacitively coupled circuit.

If a receiving circuit is sharply tuned, let us say, to 600 meters, it would be practically unresponsive to the energy radiated at 630 and 570 meters as indicated by curve *a*, thus decreasing the efficiency of the transmission. The difference between the two principal radiated waves becomes greater as the coupling is increased. If the primary and secondary coils are very closely coupled, the two peaks at 570 and 630 meters will merge into one and the radiated energy will spread out strongly through this range, causing excessive interference with other stations. The reason for this condition is that the mutual inductance between the two circuits becomes greater when the circuits are closely coupled. The mutual inductance at one moment is added, and the next moment opposed to the self inductance of the circuit, as has been explained in detail in the section on " Mutual Inductance."

Loose Coupling. By progressively reducing the coupling by increasing the distance between the primary and secondary coils in Fig. 305*b*, conditions result which are shown in curve *b* of Fig. 307. This curve indicates that much of the transmitted energy is confined to practically a single frequency of oscillation. In this case the mutual inductance between the circuits is only sufficient to secure maximum transfer of energy and permit the open antenna circuit to oscillate at its natural resonant wavelength. This curve shows an ideal condition, because there is minimum power expended in radiating energy at wavelengths other than those desired for signaling purposes.

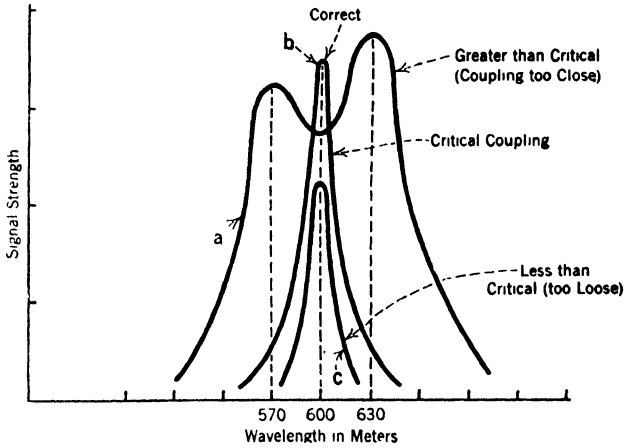

FIG. 307.—Resonance curves showing the effect of changes in coupling between oscillatory circuits.

When the coupling between primary and secondary is extremely loose the transfer of energy from the closed circuit to the open circuit becomes insufficient to secure proper radiation, as shown by curve *c* in Fig. 307.

The points brought out indicate that the problem of coupling is to secure a maximum transfer of energy to the open radiating circuit, and at the same time arrange the mutual inductance between the circuits so that radiation will not take place to any marked degree at waves other than the resonant wave assigned to carry on communication. These principles pertaining to coupling are applicable to any two associated r.f. circuits in receivers as well as transmitters.

CHAPTER XX

COMMERCIAL BROADCAST AND TELEGRAPH TRANSMITTERS[1]

Introduction.—The vacuum tube transmitter is divided into two general classes, "low power" and "high power." While there is no line of demarkation between the two classes, yet it seems proper to place all transmitters having outputs greater than 5 kilowatts in the high power class because they employ watercooled tubes and obtain the direct current plate supply from high voltage rectifiers. The transmitters rated below 5 kilowatts utilize the ordinary type of air-cooled power tube.

The various elements that go to make up a complete commercial telegraph transmitter or broadcast transmitter are treated in detail in this and the following chapter. The theories involved and the functioning of each piece of equipment cannot always be given in complete form in the descriptive material, but in most cases there will be found somewhere in this textbook an explanation of the particular part in question. It is advisable for the reader, or student, to refer to and use the various principles that are minutely explained in the elementary section. In cases where the student may possibly need assistance in this direction the necessary information is given.

The above suggestion is offered because the modern vacuum tube transmitter is no longer a simple oscillator circuit, feeding into the antenna system to set it into excitation and thus effect the transmission of radio power. It is made up from many vacuum tubes and their associated coupled circuits.

Any person analyzing the situation will readily see that the circuits are in most cases divided into definite channels. For instance, several audio amplifying tubes are usually connected between the microphone and the modulator. These tubes function alike to step-up the audio current variations to a suitable size for introducing them into the grid input circuit of the modulator. This series of amplifier tubes, with the microphone circuit, may be called the first or *audio channel.* The vacuum tubes thus used may be called either *audio* or *speech amplifiers.*

In order to generate the radio power of the high frequency alternat-

[1]Refer to Chapter XXVII.

ing current, one vacuum tube of low power is operated as an oscillator and it is calibrated to work on the frequency assigned to the transmitter. This tube is called a *master oscillator*. Or, the high frequency current may be generated in a vacuum tube circuit associated with a *quartz crystal*. The purpose of the master oscillator tube or quartz crystal is to produce the desired frequency for controlling the output of a transmitter.

The modulator tube is usually a large power tube and hence requires an oscillator tube of somewhat similar proportions to operate in conjunction with it. This is necessary to deliver in the output circuits of the power oscillator a *modulated high frequency alternating current*, carrying the voice or musical frequencies which are impressed upon the microphone.

The oscillator, of low power, is called a master oscillator, as stated previously, because the desired frequency is generated in its circuits. In some equipment several amplifier tubes in cascade are used between the master oscillator and the power amplifier in order to raise the radio-frequency to the desired level for introduction into the grid circuits of the power oscillator.

A transmitter employing a master oscillator may have several vacuum tubes in the radio-frequency channel, all functioning at the same time as amplifiers, as follows:

(1) Master oscillator.
(2) Intermediate power amplifiers.
(3) Main power amplifiers.

By referring to the schematic diagrams it will be observed that several tubes connected in parallel may be employed in any radio stage of amplification.

When a master oscillator or a quartz crystal control is utilized, a cascade radio-frequency amplifier circuit will be required. These radio amplifiers are necessary in order that the small amount of power in the oscillations generated by either the master oscillator or the crystal-controlled tube may be stepped up or magnified to the voltage level needed to feed into the power amplifier tube. These several amplifier stages connecting either an oscillator tube or a quartz crystal circuit to the power amplifier are called *intermediate radio amplifiers*. Hence we have the radio-frequency channel as a second channel.

The output of a crystal-controlled tube may be coupled to either a 7.5-watt UX-210 tube, or, in some transmitters, to a 50-watt tube operating on very low power. This, in turn, may be followed by a radio-frequency circuit using a tube of similar size in order to amplify the output of the preceding tube. If a 50-watt tube is too small to pro-

vide sufficient grid excitation for the main power amplifier tubes, several stages of intermediate amplification may be added to the circuit.

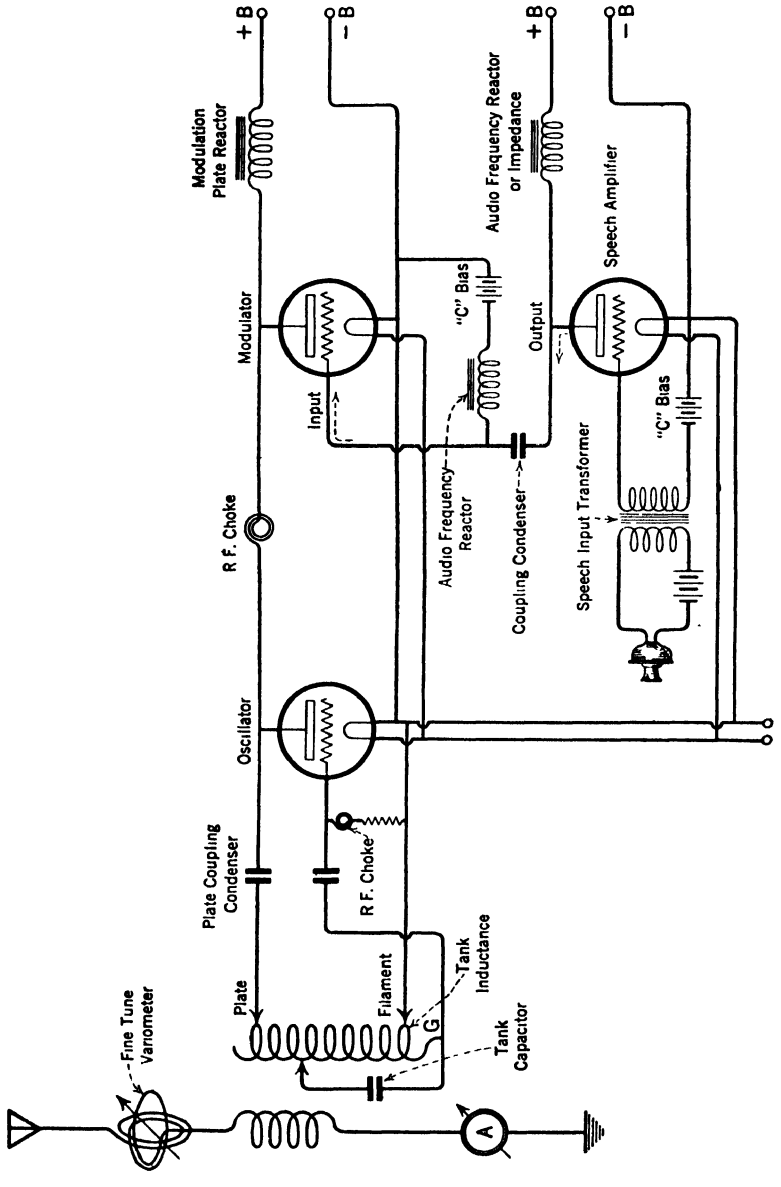

FIG. 308a.—A fundamental diagram of a radiophone transmitter employing three vacuum tubes; namely, an oscillator, a modulator, and a speech amplifier. Modulation is obtained by the Heising constant-current system.

Suppose it is desired to raise the output of the power oscillator tube, and deliver its modulated high frequency current to the antenna sys-

tem with greatly increased power. It is obvious that this can be accomplished simply by utilizing one or more very high power tubes, functioning as amplifiers between the output of the oscillator-modulator group and the antenna. These higher power tubes amplify the modulated output of the oscillator and consequently they are known as *main power amplifiers.* This group forms a third channel. The power tubes in some cases are connected in push-pull arrangement.

While the circuits in themselves are working under exacting requirements and seem complicated they will present a much less puzzling picture to the eye if we think of the channels mentioned above. To remove the apparent complexities from schematic diagrams of tube transmitters we are including the following section, which with the helpful suggestions contained therein, may provide exactly the information that the student or reader may need to make the study of the schematic diagrams comparatively easy.

The Four Essential Elements Required to Accomplish the Transmission of Voice and Music by Radio.—The fundamental circuit diagram employing three tubes is illustrated in Fig. 308*a.*

(1) An *oscillator* of high power (or perhaps one of lower power with its radio-frequency current amplified through one or more stages of power amplification) is used to supply the high-frequency continuous current necessary for propagation of radio waves through space.

(2) A *modulator* tube of suitable power (or more than one may be employed by connecting their grids and plates together in a parallel arrangement) so coupled to the oscillator that both plate circuits are energized from the same d-c. source, with the supply carried through a very large reactance coil. The purpose of the modulator is to regulate, by its plate current changes, the amount of direct current flowing to the oscillator plate. This will cause audio-frequency variations of the amplitudes of the high frequency oscillations generated in the oscillator circuit.

(3) An *iron core plate reactor* having an infinite amount of inductance for frequencies within the audio range is required. The reactor is called the *modulation plate reactor.*

(4) A *microphone* and the circuits associated therewith convert the sound waves impinged on the microphone diaphragm into a current varying as do the voice frequencies. The modulator grid input circuit is connected through one or more audio stages of amplification to the microphone cir-

cuit. In this way the modulator grid is excited by voltages varying exactly in accordance with the voice frequency currents in the microphone circuit.

It is the duty of the supervising operator or monitor to smooth off any peaks which rise to excessive values, for they might impair the quality of the reproduction, that is, cause distortion.

An oscilloscope, shown in Fig. 321, uses an incandescent lamp as a light source and a vibrator, and is employed for checking the percentage of modulation. A monitoring pick-up inductance is loosely coupled to the antenna system and the small amount of energy induced in this coil feeds into the oscilloscope. This arrangement gives a true indication of the characteristics of the modulated signal that is being radiated. The circuits for this apparatus are shown in the circuit drawing of Fig. 319.

A high percentage of modulation or a large audio-frequency change in the carrier wave amplitudes is needed to raise the speech or music received far above a static background or other interference.

More detailed explanations are given in following paragraphs regarding this important relation between the modulator and oscillator.

The essential circuits which we have just described are arranged in a simplified form as shown in the fundamental diagram of a radiophone transmitter in Fig. 308*a*. This subject may be best presented according to the following outline.

(1) Master oscillator or crystal-controlled oscillator circuit.
(2) Microphone transmitter.
(3) Combined oscillator and modulator.
(4) Power amplifier tubes.
(5) Methods of coupling.
(6) Circuit elements, inductances and condensers.
(7) Antenna systems.
(8) Popular description.
(9) General features.

(1) The Heart of the Transmitter.—The logical beginning of this subject is with either the quartz crystal-controlled circuit, or the master oscillator tube circuit. These devices supply the initial oscillatory current of the proper frequency.

Through the radio channel of amplifiers, referred to in previous paragraphs, the output of either of the continuous alternating current generators is raised to the desired level to excite the power tubes. By the use of either system of frequency control, the frequency of the trans-

mitter is maintained practically constant. The crystal-control method especially maintains a very high degree of constancy of the high frequency wave.

One or more crystals may be mounted in a heat shielded compartment with the temperature maintained by thermostatic controls at a constant value, usually 45° C. When provision is made for mounting several crystals, a switch on the panel will allow any one of the crystals to be easily selected. In certain transmitters a standard UX-210 tube is arranged either to amplify the output of a preceding stage in the case of crystal-control, or to function as a self-excited master oscillator when crystal-control is not desired. The changeover from crystal to master oscillator operation or vice versa is accomplished by means of a double-pole, double-throw switch.

The Quartz Crystal.—The quartz crystal is cut from a solid piece of

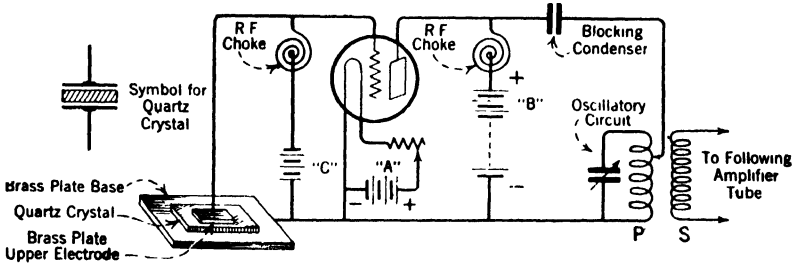

FIG. 308*b*.—Fundamental crystal-controlled oscillator circuit The quartz crystal is shown mounted in this manner merely for the purpose of demonstrating the principle upon which it operates.

quartz. A slice or plate of the proper thickness is cut from the slab of quartz and is then ground to the specified thickness in order to give it a definite period of oscillation. The quartz plate is cut from the slab in a manner to make its electrical axis at right angles to the optical axis. After grinding and polishing the flat surfaces by the *lapping method*, absolute parallelism between them is obtained. This is necessary to insure the accuracy and stability of the crystal's oscillating characteristics. The thin piece of quartz is mounted between two metal plates and is then connected by one of several methods, let us say, to a small tube such as the 201-A or to a 7.5-watt tube (UX-210) with its associated oscillatory circuit formed of inductance and capacity. The vacuum tube furnishes the driving power.

The crystal may be mounted between two metal plates as in the Fig. 308*b* diagram, but, due to its mechanical vibrations when oscillating, the upper plate must rest only lightly upon the crystal surface.

After supplying power to the vacuum tube, from an "A" and "B" battery and the correct "C" bias to the grid, then by rotating the variable condenser in the oscillatory circuit connected to the plate, or by making other changes in circuit conditions, a point will be found where the crystal begins vibrating, thus setting up continuous r.f. oscillations at its natural mechanical vibration period.

Notice that the crystal is connected between grid and filament. Also the high frequency currents passing through plate coil *P* will induce oscillations in *S*, as the latter coil is part of the tuned grid circuit of the following amplifier tube.

The quartz crystal is very likely to crack or shatter if a large current is carried by the tube, therefore the low power output of the crystal-controlled tube must be amplified in order to excite the high power amplifier tubes which follow this circuit.

The first stage amplifier may be adjusted to the fundamental, or one of the harmonics generated in the circuits of the crystal-controlled oscillator. It is to be recalled that all oscillating tube circuits produce not only a fundamental, but several harmonics. This phenomenon allows thicker crystals to be manufactured, thus minimizing their tendency to shatter under a strain. If, however, one of the power amplifier tubes should break into oscillations of its own accord, its energy would work back through the circuits, causing the crystal to crack.

When the crystal is in a vibratory condition, some portions of the flat surface are believed to undergo an upward movement, while other portions at the moment are moving in a downward direction, thus creating on the surface numerous infinitesimally small peaks and depressions. The crystal when vibrating may have a longitudinal distortion or movement.

This physical motion or flexing of the material requires that the crystal be held loosely between the two metal conducting plates. There are other possible circuit arrangements than the one shown herewith. The actual manner in which a crystal is connected to a vacuum tube circuit is illustrated in the schematic diagram, Fig. 309, of the 1-kw. high-frequency transmitter. This phenomenon and other facts are explained in more detail in the "short wave" section.

This property of a vibrating quartz crystal in building up an electric charge between its plates is called *piezoelectric.* When the frequency of the power amplifiers of a transmitter is adjusted with a quartz crystal, the transmitter is said to be *piezoelectrically controlled.*

(2) Microphone.—The microphone is one of the most important units of a broadcast station, since it is required to transform faithfully the voices of persons speaking or singing, or musical renditions, into a modulated current whose wave form is carried through the balance of

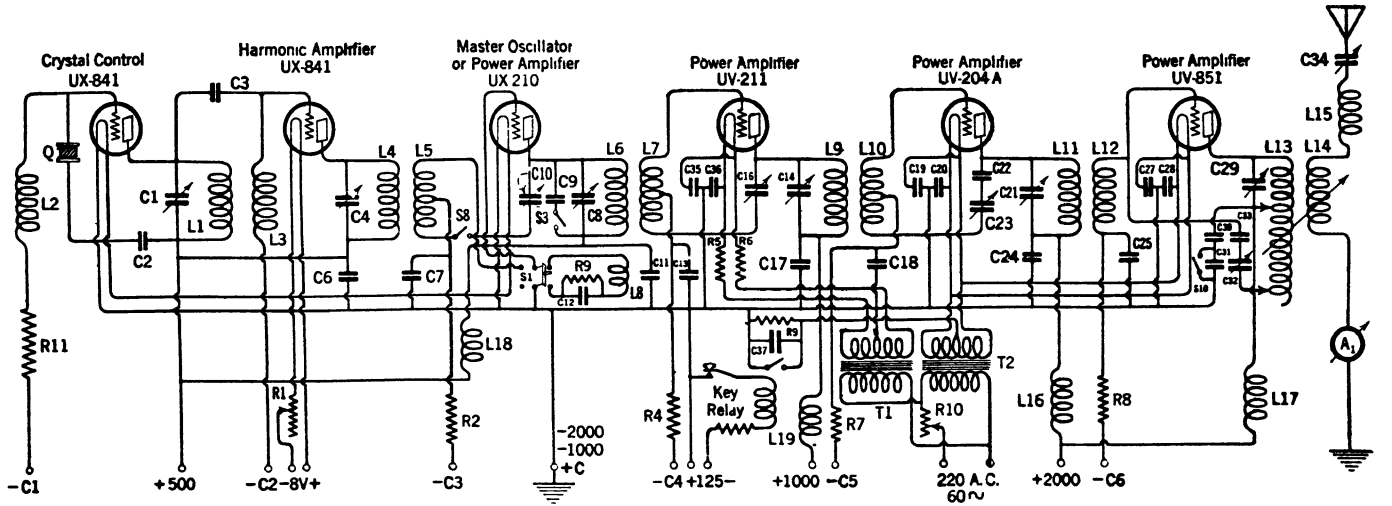

FIG. 309.—Circuits of a 1-kw High Frequency Transmitter.

A_1 Ant Ammeter
C_1 Var Tank Condenser.
C_2 By-Pass Condenser.
C_3 Coupling Condenser.
C_4 Var. Tank Condenser
C_6 By-Pass Condenser
C_7 By-Pass Condenser
C_8 Var. Tank Condenser.
C_9 Tank Condenser
C_{10} Neutralizing Condenser
C_{11} By-Pass Condenser.
C_{12} M. O. Grid Condenser
C_{13} By-Pass Condenser
C_{14} Var. Tank Condenser.
C_{16} Var. Neutralizing Condenser.
C_{17} By-Pass Condenser
C_{18} By-Pass Condenser.
C_{19} Fil By-Pass Condenser
C_{20} Fil By-Pass Condenser
C_{21} Var Tank Condenser
C_{22} Blocking Condenser
C_{23} Var Neutralizing Condenser
C_{24} By-Pass Condenser
C_{25} By-Pass Condenser
C_{27} Fil By-Pass Condenser.
C_{28} Fil By-Pass Condenser.
C_{29} Var Tank Condenser
C_{30} By-Pass Condenser
C_{31} By-Pass Condenser
C_{32} Var Neutralizing Condenser.
C_{33} Blocking Condenser
C_{34} Ant. Series Condenser
C_{35} Fil By-Pass Condenser
C_{36} Fil By-Pass Condenser
C_{37} Key Condenser
L_1 Tank Inductance
L_2 Grid Choke
L_3 Grid Choke
L_4 Tank Inductance
L_5 Grid Inductance
L_6 Tank Inductance
L_7 Grid Inductance
L_8 M O Grid Inductance
L_9 Tank Inductance
L_{10} Grid Inductance
L_{11} Tank Inductance
L_{12} Grid Inductance
L_{13} Tank Inductance
L_{14} Ant Coupling Inductance.
L_{15} Ant Loading Inductance.
L_{16} Plate Choke
L_{17} Plate Choke
L_{18} Plate Choke
L_{19} Plate Choke
Q Mounted Quartz Crystal
R_1 Fil Resistance
R_2 Grid Leak Resistance
R_4 Grid Leak Resistance
R_5 Fil Resistance
R_6 Fil. Resistance
R_7 Grid Leak Resistance
R_8 Grid Leak Resistance
R_9 Grid Leak Resistance
R_{10} Fil. Control Resistance.
T_1 Fil. Transformer.
T_2 Fil. Transformer.
Key Relay Resistance not numbered.

the equipment. The microphone or pick-up device is divided into the following general classes:

(1) Carbon transmitters.
(2) Condenser transmitters.
(3) Magnetic transmitters.

The carbon and magnetic microphones are known as single- and double-button microphones. The carbon type is described in detail in the following paragraphs. The magnetic type is often used when individual control of certain instruments is desired, as, for example, in the case of transmitting piano music. The sounding board vibrations are transmitted to a rotatable coil which is mounted in a strong magnetic field. The changing flux induces potentials in the coil which are impressed between grid and filament of the first amplifier tube.

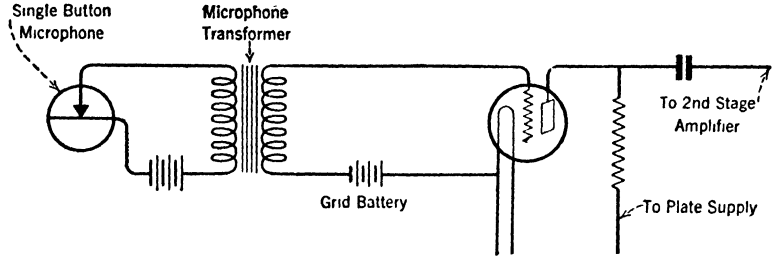

FIG. 310.—A simplified diagram of a microphone circuit coupled to a stage of audio-frequency amplification.

The condenser microphone operates by minute variations in capacity with a potential of approximately 200 volts between plates in one type. Its output feeds into a complete stage of amplification, employing a small receiving tube, this tube being mounted with its output coupling transformer in the same container with the microphone, the circuit arrangement being shown in Fig. 319.

Carbon Transmitter.—When sound vibrations are translated into electrical movements, the currents of electricity are made to carry the inflections of the human voice, or the emanations from musical instruments. The method whereby sound vibrations will be registered and have the effect of producing currents that follow in sympathy with the same changes is called *modulation.*

Figure 310 shows the manner in which a single-button microphone is connected to a battery and to the primary of a special input iron core transformer. One type of microphone is shown in the photograph, Fig. 311.

A cross-sectional view of a telephone transmitter which functions on exactly the same principles as a broadcast transmitter (microphone) is shown in Fig. 312. It contains a small cup of carbon granules *C*, which are free to move, and through which current will pass from the battery. An inner compression disk *M* is enclosed in the cup resting against and making contact with the granules, also exerting a mechanical pressure against them. The purpose of the disk *M* is to vary the electrical resistance of the granules by slight changes in mechanical pressure when sound waves are impinged upon the surface of the outer diaphragm *D*. This diaphragm is constructed of thin metallic material about .002 in. thick and is tightly stretched and clamped between two rings. In one type of transmitter the diaphragm is made of duralumin. Only a small motion of the diaphragm, as set up by the sound waves, is required to provide a varying current which possesses the true characteristics of the sound-pressure wave. The diaphragm should be so constructed (dampened) as to be incapable of vibrating at any mechanical or independent frequency, otherwise certain frequencies would be made more responsive than others and, of consequence, the reproduction would be distorted. The vibrations of the thin outer diaphragm *D* are transmitted to the compression disk *M*, as can readily be seen when examining the cross-sectional view of the microphone construction in the diagram.

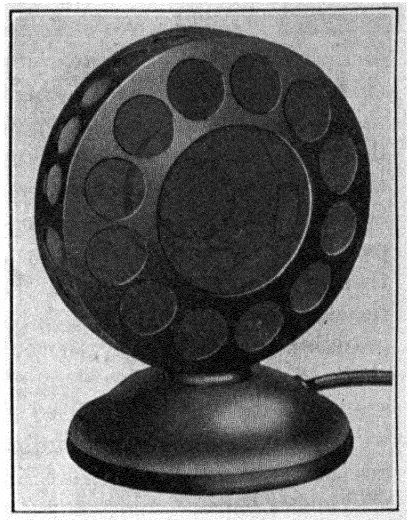

FIG. 311.—Double-button microphone.

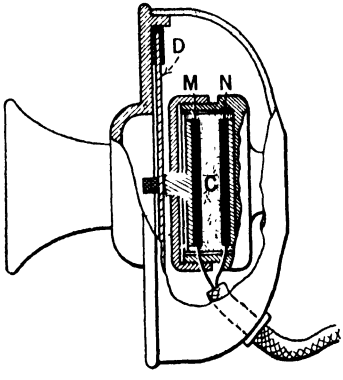

FIG. 312.—Cross-sectional view of a carbon button type transmitter, usually referred to as a microphone.

The carbon granules are either firmly or closely packed or loosened by the ever-changing compression of the disk due to the condensation and rarefaction of the sound waves directed toward the mouthpiece.

Direct current flows through the granules from the battery by means of the two wires connected to disks *M* and *N*, and thence through the transformer as shown in Fig. 310.

When a sound wave strikes diaphragm *D*, Fig. 312, the movement of disk *M* changes its pressure on the granules, either packing them close together or allowing them more freedom. This disturbance of their normal arrangement or positions permits a greater or less current flow because of the change in resistance. For example, when the granules rest against one another quite closely, they offer less resistance to current passing through them; and conversely, when more loosely packed, their resistance is increased and less current will pass through them. The process is one of allowing more or less current flow through the carbon cup by varying the normal pressure of the disk against the granules. Consequently the current passing through the primary of the transformer will also change, since this winding and the microphone are connected in series. The magnetic flux permeating the iron core will vary in magnitude according to the current changes and induce a fluctuating electromotive force in the secondary.

Hence, the secondary carries a fluctuating current which varies at audio-frequency, repeating the wave form and frequency of the sound waves acting on the diaphragm. Observe in Fig. 310 that the secondary is connected between grid and filament of the first-stage amplifier tube. It is in this way that the grid is excited. The result is a variation in the strength of the tube's plate current, which variation is a reproduction of the wave form of the speech frequency current in the microphone circuit. One or more stages of audio amplification follow this stage in order to increase the signal voltages to a value suitable for introducing them directly into the grid circuit of the modulator. These amplifying circuits are explained in detail in other parts of this chapter.

The carbon cup is usually called the button. A single-button and a two-button microphone are shown connected to an audio transformer and amplifier tube in Figs. 310 and 313 respectively. The carbon type microphone used in certain broadcasting equipment receives its power from a 12-volt storage battery. The resistance of the carbon button together with the speech transformer winding is calculated to pass 25 milliamperes of direct current, this particular value having been found to give the microphone circuit the most satisfactory speech frequency characteristics. Whenever the microphone is in active use for any appreciable time it should be shaken in order to loosen the carbon granules which may have become packed, due to the constant flow of current through them. The microphone current can be regulated to a strength approximating 12 to 15 milliamperes for certain types of service.

A variable resistance called a monitoring potentiometer is used to control the intensity of the audio-frequencies received from the microphone circuit. This is sometimes referred to as volume control. The control of this energy in a broadcast station is assigned to an operator who is known as a *monitor*. His duty is to prevent excessive sound vibrations impinged on the surface of the diaphragm from causing abnormal current changes in the transformer, which not only would distort the reproduction, but would give the effect of an uneven change in tone volume, and sometimes a blasting effect. The monitor follows the current variations, or the depth of the modulation by the deflections

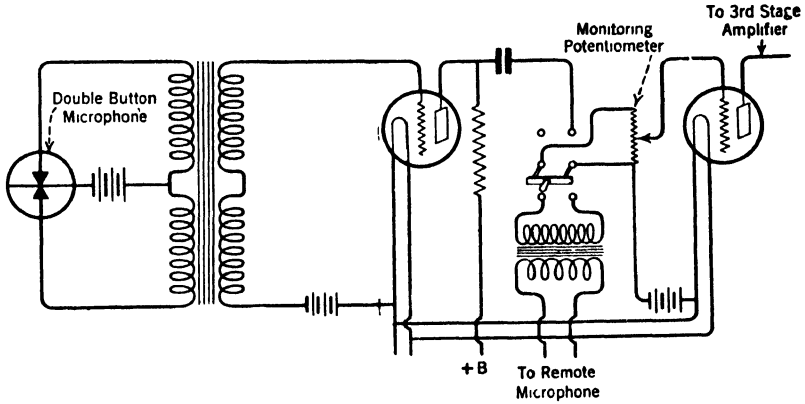

FIG. 313.—A circuit arrangement showing a double-button microphone operating in conjunction with two stages of audio-frequency amplification. The tone level of the output of the microphone circuit is controlled by the monitoring potentiometer (also called volume control). The switch shown permits either a remote microphone or the station microphone to be used.

of a needle across the scale of a very sensitive meter connected to the circuit.

The action of the two-button microphone is as follows: The carbon granules in the buttons press against either side of the diaphragm, which has gold-plated areas. The potential across the buttons is carefully regulated for proper operation, so that the output current of the microphone will resemble as closely as possible the wave form of the original sounds. A special split transformer is required with the two-button microphone and reference to the diagram, Fig. 313, shows that the current furnished by the battery flows through either half of the transformer primary in opposite directions. When the diaphragm moves the pressure against one set of granules is increased while the other is decreased. This differential action (sometimes called push-pull) sets

up a changing flux in the iron core of the transformer, which induces an a-c. voltage in the secondary. By this arrangement the secondary voltage reaches a value considerably greater than would be possible if only one carbon button were employed.

The oscillograms in Fig. 314 clearly show the complex wave produced by speech and the simpler forms produced by certain musical instruments when converted into electrical impulses.

(3) **The Purpose of the Combined Oscillator and Modulator.**—The chapter on " Vacuum Tubes " explains how the plate current will vary

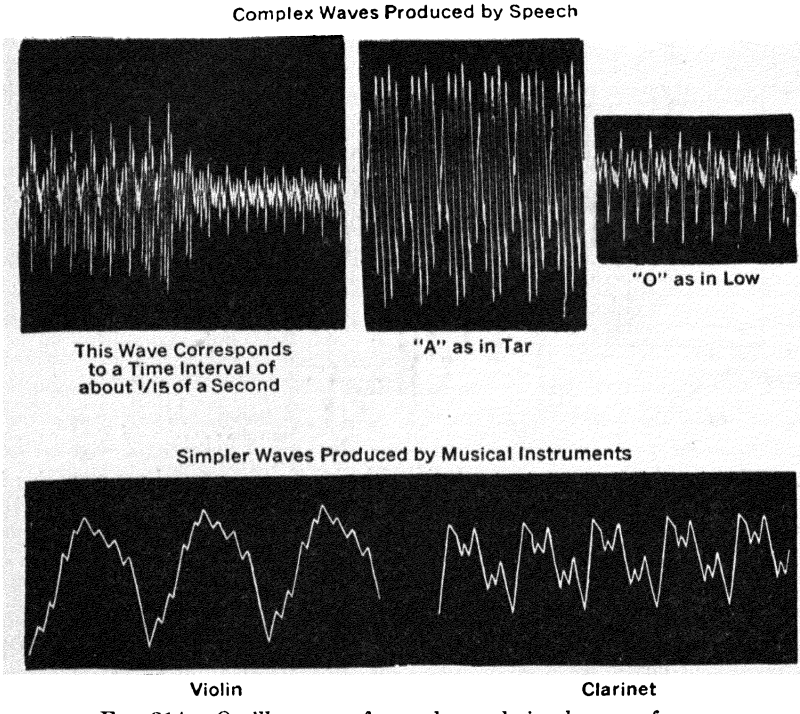

FIG. 314.—Oscillograms of complex and simple wave forms.

in a proportional manner when the plate voltage is either increased or decreased. When the plate potential is held at some constant value and the grid potential is then varied, the grid will become the controlling member and cause the plate current to change. Thus the plate current can be varied by either of two methods, by plate voltage, or by grid voltage changes.

(*a*) Suppose that a vacuum tube of high power (the oscillator) is generating radio-frequency oscillations. The oscillator tube circuits will then deliver this high frequency current of constant amplitude and

frequency, and of enormous strength, to any neighboring oscillatory circuit with which it may be coupled, for example, to an antenna system.

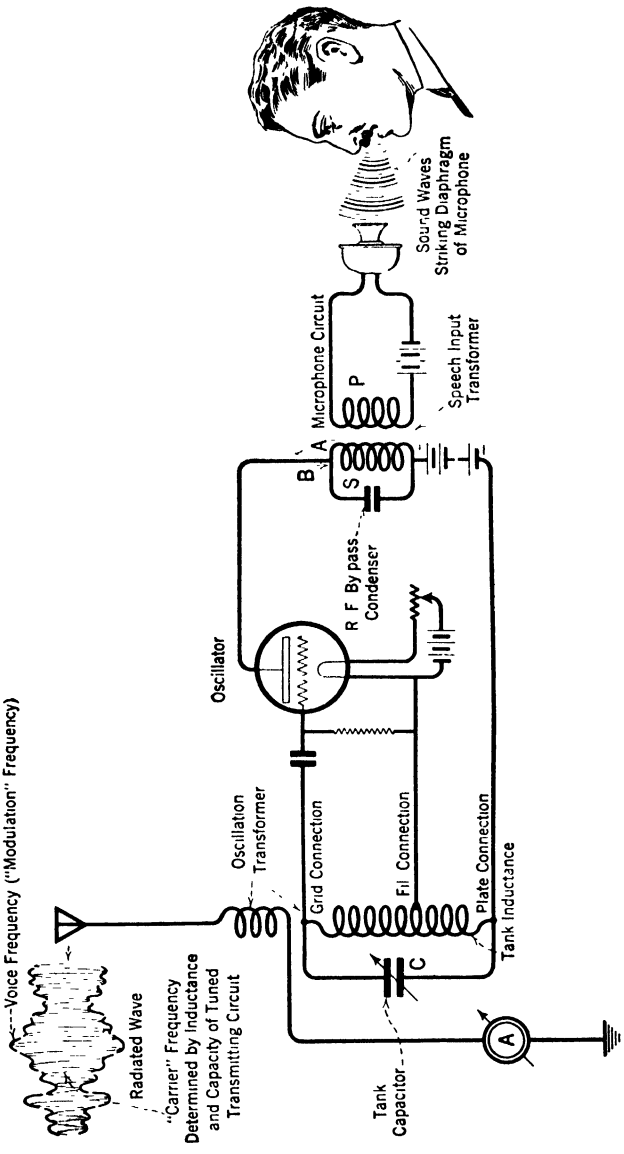

FIG. 315.—A simplified circuit of one of several methods by which voice modulation of the high frequency output of a vacuum tube transmitter may be accomplished. The curve shows how the generated oscillations are either increased or decreased in amplitude according to the frequency and intensity of the sound waves directed toward the microphone.

Again, suppose that we place a coil S in the plate circuit of the oscillator and inductively couple another coil P to it as shown in Fig. 315. Coils P and S actually constitute an audio-frequency transformer. Let

us say, for illustration, that coil P is carrying a speech frequency current supplied to it from a microphone. It is to be expected that the magnetism fluctuating in the iron core, set up by the current in coil P, will induce an alternating voltage in plate coil S of a similar frequency, having the same wave form, or characteristics.

In that case the induced alternating voltage shown by arrows A and B will either attempt to add to or subtract from the voltage already on the plate which is supplied from the d-c. source, for instance, the plate battery. It can easily be imagined that it will require a rather high induced voltage to effect any sort of control in varying the plate cur-

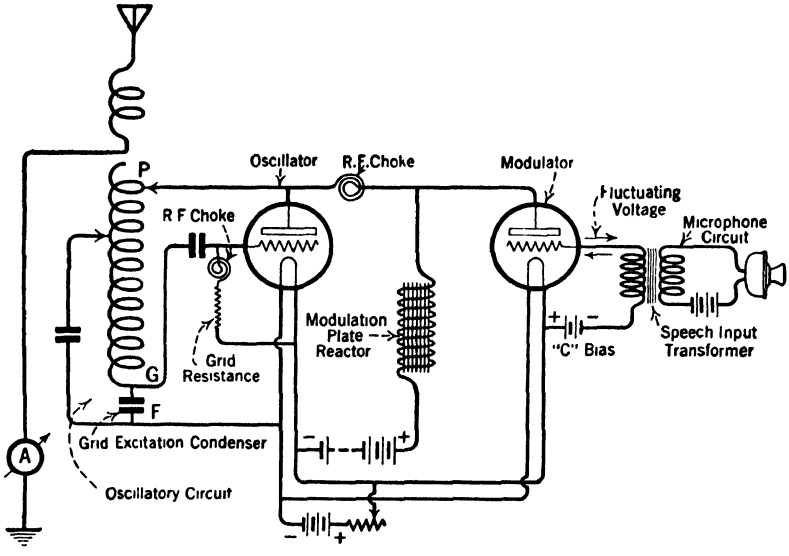

FIG. 316.—A fundamental diagram of a broadcast transmitter employing the constant current system (Heising method) of modulation. A Colpitts type oscillator is used and the tank circuit or oscillatory circuit is inductively coupled to the antenna.

rent from the limits to which it is normally producing oscillations having high peaks, or large amplitudes of power. In fact, such an arrangement is impracticable with large power tubes.

The question might be asked: Why not check, or alter, or limit the amount of current supplied to the plate in the first place and not attempt to force the control of the plate current change from some external circuit through a coil inductively coupled to the plate, as suggested?

The curves in Fig. 315 show how the amplitudes of the oscillator current would be modulated by this action if this arrangement were successful.

(*b*) This problem was met in the circuits invented by Heising from

his belief that it would be possible to control the amount of the direct current flowing to the oscillator plate by regulating the current flow within the circuits themselves. The fundamental circuit formed consisted of two tubes, one an *oscillator* tube and the other a *modulator* tube, with both their plates connected together in order that the energizing direct current normally supplied to the plates would flow through the same channel or supply lead running from the positive side of the d-c. generator or battery as shown in Fig. 316.

(*c*) Then matters were arranged so that the direct current supply was maintained at a constant or steady value. This was accomplished by inserting an iron core choke coil, or reactor, in series with the positive supply lead. The controlling action is based upon the fact that a coil of high impedance will oppose any change in current passing through it within certain frequency limits.

It was then found to be a comparatively easy matter to reduce the current flowing to the oscillator plate by making the other tube (the modulator tube) draw more current. Conversely, if the modulator tube is made to pass less current in its plate circuit, the oscillator plate circuit is forced to take more current.

In other words, the supply from the d-c. generator or battery is maintained at a steady value by the modulation plate reactor. The operation of the two tubes is explained by the following process: If one tube draws more plate current by a certain amount, the plate current flowing through the other tube must decrease by the same amount, or vice versa. The current flowing through both plate circuits varies inversely whenever the current is forced to undergo a change in the modulator plate circuit.

(*d*) The problem at hand is to cause the modulator plate current to change. This, we know, can be controlled (by the remarkable control the grid electrode exercises over the plate current in any tube function) by setting up a circuit carrying a changing current and then coupling this circuit to the modulator grid in order that the modulator grid may receive a varying potential. It is plainly seen that the changing of the modulator grid potential in this way solves the problem of forcing the modulator plate current to vary. The ultimate purpose of this whole plan is now fulfilled, for the fact remains that any voltage change on a modulator grid will cause its plate current to change by large amounts. (The modulator is worked with an amplifier characteristic. See the "Amplifier" section.) For any increase or decrease of plate current values through the modulator, the oscillator plate current will undergo a similar change in strength, but in the reverse ratio as just stated.

The oscillator plate current will vary in accordance with any voltage

changes applied to the modulator grid. The form or shape of the voltage changes on the modulator grid will be registered in the rise and fall values of the oscillator plate current.

(*e*) Meanwhile the oscillator is generating radio-frequency oscillations It is this particular point which should now be brought out. The amplitudes of the generated oscillations will be made stronger or weaker throughout the different moments during operation, as will be determined by the amount of plate current the modulator is drawing at any instant.

Therefore, the amplitude peaks of the oscillator's wave form conform to the input voltages impressed upon the modulator grid.

(*f*) The last requirement is to connect a suitable microphone circuit to the modulator grid circuits so that the sound impressions on the microphone diaphragm will provide the necessary modulator grid voltage changes in order that the oscillator plate current will rise and fall. The rise and fall of the oscillator plate current at an audio rate of change of course means that thousands of high frequency generated oscillations will be carrying the audio variations. This is how the audio change is superimposed upon the high frequency oscillator current. (Refer to the curve in Fig. 315.) The system is known as the *constant-current* system, because the direct current supplied to the plates of both tubes flows through the large impedance coil or modulator plate reactor which keeps the supply constant. The action between the two tubes is somewhat of a reciprocating nature. If one tube passes more current than the other, the current in the second tube is lowered by a proportional amount, and so on.

Explanation of Principles Involved in Constant-Current Heising System of Voice Transmission.—The fundamental action of the modulator and oscillator rests upon the choke coil (the modulator plate reactor) which is connected in the common high voltage plate supply lead, as shown in Fig. 316 and also in view *A* of Fig. 317.

Let us see what such a choke coil or reactor will do when inserted in a direct current circuit. The reactor, due to its heavy iron core and many turns of wire, will build up a large magnetic flux, and if, for any reason, the steady current passing through it attempts either to increase or decrease in strength, the lines of force thus existing about the coil, or rather permeating the iron core, will prevent such changes. This, of course, means that the coil will have an infinite amount of inductance for audio-frequency current changes. The current through the choke will remain practically unchanged and the supply to the modulator and oscillator plate circuits (which are connected in parallel in the manner illustrated) will be almost a constant current.

The steady current through the reactor must flow to the plates of both tubes, because the plate circuits are in a parallel arrangement as just stated. Whenever a direct current of constant value flows to a parallel circuit consisting of two branches or members, the current will divide itself equally between them, providing both branches, or tubes in this case, are of equal resistance. Each branch normally draws the same amount of current.

We have assumed that the two branches have similar resistance

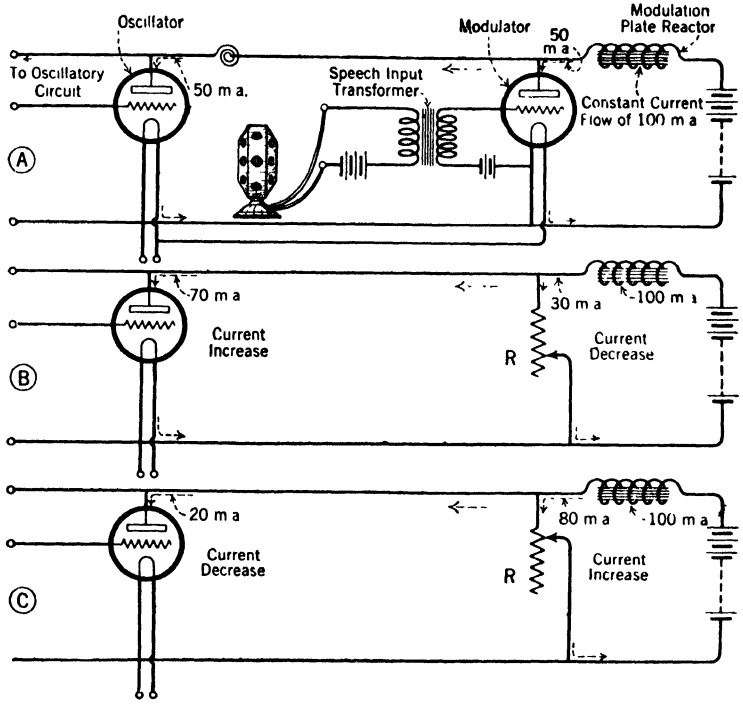

FIG. 317.—A simplified diagram of the Heising system of modulation. Drawings (*B*) and (*C*) show a variable resistance substituted for the modulator tube to explain the principle of how variations in the modulator plate circuit effect the current drawn by the oscillator plate circuit.

values, that both pass the same amount of current, and, also, that the total current which is divided between them is always a fixed quantity. To illustrate this action clearly, views *B* and *C*, Fig. 317, show how the modulator tube in view *A* may be compared to a variable resistance. The following arbitrary values are selected as practical examples in order to explain the action. The constant d-c. supply through the choke, let us say, is 100 milliamperes. This amount of current is divided

equally between the two branches (the plate circuits of the two tubes), hence only 50 m.a. will be drawn by either branch. Suppose, then, the resistance of one of the branches marked *R*, in view *B*, is altered, and, let us say, is increased to the extent that the current in that branch is lowered from 50 m.a. to 30 m.a. There is only one conclusion: the other branch will be forced to take an increase of 20 m.a. because the supply through the choke does not change. The current in the second branch (the oscillator tube) will increase from 50 m.a. to 70 m.a. and the total between the two branches remains unchanged at 100 m.a. The current variations through the two paths are inversely proportional. Also, if resistance *R* is decreased as in view *C* and this branch draws possibly 80 m.a. the balance, or 20 m.a., will pass through the oscillator.

In this discussion we treat the plate circuit of the oscillator as one resistance path, and the plate circuit of the modulator as the other resistance path, or *R*. Now, for any change in the current flowing through the modulator plate circuit, *R*, the oscillator current will also vary, but in an inverse ratio. The modulator plate current will vary in strength gradually and continuously at any given frequency by impressing a fluctuating voltage upon its grid. We know that the grid has the power to exercise such control over the plate current.

The fluctuating current in the microphone circuit is utilized to communicate the necessary voltage changes upon the modulator grid. This is usually accomplished through one or more stages of audio-frequency amplification.

The principles of modulation, as set forth in these paragraphs, do not form a complete explanation, because whenever a direct current is made to vary in a circuit the d-c. voltage in that circuit must also change in a proportional manner. If the plate direct current to the oscillator tube changes, the potential existing upon its plate also must change. This is a fundamental law. The current cannot increase, or decrease, without some corresponding change in voltage.

It should be easy to understand how the oscillator plate voltage changes at audio-frequency, while in the meantime the oscillator circuit is generating high frequency oscillations called the carrier frequency; also how the rise and fall values (the amplitudes) of the alternations of plate current will be forced to follow a similar change. How the amplitudes of a carrier frequency can be forced to undergo changes is illustrated diagrammatically in Fig. 318.

The amplitudes of the generated oscillations are moulded or modulated according to the audio voltage changes impressed on the modulator grid. These audio-frequency voltage changes occur on the oscillator plate, while at the same time it is producing a high frequency cur-

rent, practically proportional to the voltage applied to the modulator grid. The wave forms of the moulded or modulated peaks of the radio oscillations conform to the wave form of the voice changes, as illustrated in the curves of Fig. 322.

If the resistance of one branch (the modulator) is variable and is gradually changed so that a constantly varying current passes through it, it is obvious that the current received by the other branch (the oscillator) will vary inversely. The audio change in the amplitudes of the generated oscillations is usually called the *audio envelope*, because its

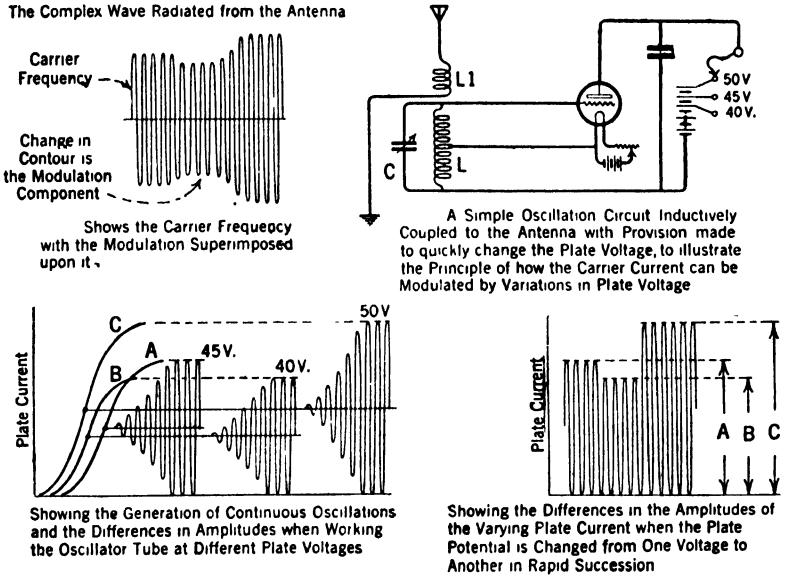

FIG. 318.—The curves above convey the idea of how the r.f. oscillations generated in the circuits of a vacuum tube transmitter can be modulated by simply varying the d-c. voltage applied to the plate of the oscillator tube.

wave form encloses the radio oscillations, as will be noticed when inspecting the curves which illustrate this action.

Consequently, the waves radiated by a broadcast transmitter have two frequency components. One is that of the generated alternating current, or the *radio-frequency component*, also called the carrier frequency. (See the curve of a radiated wave in Fig. 315.) The other is that of the modulated peaks, or the *audio-frequency component.*

The resistance analogy is used merely to clarify the explanation relating to the action of one tube drawing more or less current, and the other tube being correspondingly affected, as previously mentioned.

(4) **Power Amplifier Tubes.**—All tubes other than oscillators and modulators operate either as intermediate amplifiers in the audio or radio-frequency channels or as main power amplifiers.

(5) **Methods of Coupling.**—The different diagrams show that all of the methods of coupling and general arrangement of the amplifier stages greatly resemble the ordinary circuits in a receiving set. The kinds of coupling are: *transformer, resistance* and *impedance.* Wherever resistance or impedance coupling is utilized, it requires that a coupling condenser must be connected from the plate of one tube to the grid of the following tube. It is easy to locate the coupling condenser for a particular stage by remembering this rule. The schematic diagrams often show the coupling condenser in any convenient location on the drawing without regard to the location of the tube with which it is associated.

(6) **Circuit Elements.**—The inductances and capacitors are much larger in a transmitter than in a receiver but they are connected in the same way and function similarly. All high frequency wiring in the transmitter circuits is usually made with copper tubing.

(7) **Antenna Systems.**—The antenna system and coupling inductances in the large broadcast stations are usually situated several hundred feet from the transmitter proper. In the panel type commercial broadcast or telegraph transmitters all of the coupling inductances are mounted within the frame.

When an antenna of the Hertzian type is located at some distance from the transmitter, the antenna may be energized by means of two wires, called the *radio-frequency feed-lines.* These lines are run on wooden poles to the coupling inductance near the antenna. A single wire feeder-line system may be used instead of the two-wire, and for particulars in reference to the coupling methods used refer to the section on "Short Waves."

Depth of Modulation.—The amplitudes of the stream of continuous oscillations from the output of the power amplifier tube are constantly varying in strength as the modulator tube draws more or less current. This action is dependent upon the modulator grid voltages. It is evident that there are moments when the modulator draws only a small plate current. The oscillator is then forced to take the difference between what the modulator is passing and the steady current through the plate reactor. Hence the oscillator plate current rises to maximum strength as determined by its own characteristics.

On the other hand, when the oscillator draws only a very low plate current, the modulator current increases. This condition, whereby the amplitude heights of the generated continuous oscillations rise and fall within the upper and lower limits of the oscillator tube, is called the *percentage of modulation*, or *depth of modulation.* The speech frequency

characteristics are more faithfully repeated when the depth of modulation approaches the limit, or 100 per cent. This condition means that the input to the microphone is repeated with fidelity in the modulated carrier wave radiated from the output of the transmitter.

The power tubes selected for a particular circuit must be capable of handling high modulation peaks without overloading, which would cause distortion. The monitoring of a transmitter must be skillfully controlled to prevent overloading.

TYPICAL LESSON SHEET FOR THE STUDENT

Block Out the Circuits According to the Explanations Given Herewith. Helpful Suggestions for Reading a Complex Schematic Diagram.—The 1-kw. broadcast transmitter circuits will be used as a sample to demonstrate how a block diagram should be developed. This commercial panel type transmitter is selected because its circuits are not complicated in design, and also to make all of the conditions practical.

The following suggestions are offered: With the schematic diagram, Fig. 319, before you,

Block out the radio channel, the audio channel, and the oscillator-modulator group and label them, as illustrated in Fig. 320.

Now draw the curves representing the wave form of the current carried through each block and also show how the successive stages of amplification build up the energy, but do not change the wave form as we have suggested in Fig. 322. Observe that the blocks in Fig. 320 are marked according to the function of the principal parts in those blocks, with reference made to the schematic diagram and legend in Fig. 319. There are four tubes connected in parallel functioning as modulators and two in parallel functioning as intermediate power amplifiers. The abbreviation M.O. signifies that a master oscillator tube circuit is used as the frequency-determining unit. In this particular circuit the quartz crystal control is not used. (Whenever indicating a quartz crystal in a block diagram there is used the conventional symbol as illustrated in the schematic of the fundamental crystal circuit, Fig. 308*b*.)

A POPULAR DESCRIPTION OF THE COMPLETE BROADCAST TRANSMITTER AND RECEIVER

(8) Refer to Figs. 319 and 322. Either speech or musical sound waves are directed toward the microphone. These sound vibrations or waves impinged upon the diaphragm of the microphone cause the resistance of a small cup of fine carbon granules to vary in exact accordance with the sound waves. If a condenser microphone is employed, as shown in the diagram, very slight changes in the capacity of the condenser will provide effects in the circuit which ultimately are similar to those of the carbon cup, or button, as it is called.

The direct current flowing through the carbon button varies in pro-

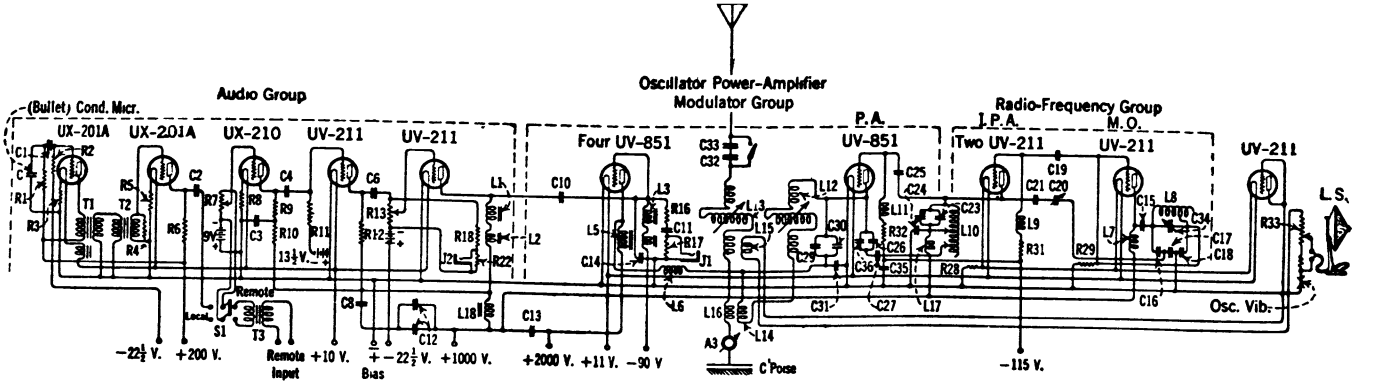

FIG. 319.—Schematic circuit diagram of a standard 1-kw. broadcast transmitter. Note particularly how the condenser type microphone is connected in the circuit and supplied with a potential of about 200 volts through resistance R_1. Also how the variable resistances R_7 and R_{13} are arranged to control modulation, called volume control. When a remote microphone is used its input power will be sufficient to be delivered to the grid of the UX-210 tube.

A_3 Ant. Ammeter
C Cond. Microphone
C_1 Grid Condenser
C_2 Coupling Condenser.
C_3 By-Pass Condenser
C_4 Coupling Condenser
C_6 Coupling Condenser
C_8 Filter Condenser.
C_{10} Coupling Condenser.
C_{11} Blocking Condenser.
C_{12} Filter Condenser
C_{13} Filter Condenser
C_{14} By-Pass Condenser
C_{15} M.O. Plate Blocking Condenser
C_{16} M.O. Plate Condenser.
C_{17} M.O. Plate Condenser.
C_{18} M.O. Grid Condenser
C_{19} I.P.A. Coupling Condenser
C_{20} Neutralizing Condenser.
C_{21} Neutralizing Blocking Condenser.
C_{22} I.P.A. Var. Tank Condenser in shunt with C_3
C_{23} I.P.A. Tank Condenser
C_{24} I.P.A. Plate By-Pass Condenser
C_{25} P.A. Coupling Condenser
C_{26} P.A. Neut. Condenser
C_{27} P.A. Neut. Blocking Condenser
C_{29} P.A. Tank Condenser
C_{30} P.A. Tank Condenser
C_{31} P.A. Plate By-Pass Condenser
C_{32} Ant. Series Condenser
C_{33} Ant. Series Condenser
C_{34} M.O. Var. Tank Condenser
C_{35} Bias Filter Condenser
C_{36} P.A. Neut. Condenser.
L_1 Plate Reactor.
L_2 Plate Reactor.
L_3 Mod. Grid Reactor
L_4 Mod. Grid Reactor in series with L_3.
L_5 Modulation Reactor
L_6 P.A. Plate Choke.
L_7 M.O. Plate Choke
L_8 M.O. Tank Inductance
L_9 I.P.A. Grid Choke
L_{10} I.P.A. Tank Inductance.
L_{11} P.A. Grid Choke
L_{12} P.A. Tank Variometer
L_{13} Antenna Variometer
L_{14} P.A. Coupling Inductance
L_{15} Oscill. (Monitoring) Pick-Up Inductance
L_{16} Ant. Coupling Inductance
L_{17} I.P.A. Plate Choke.
R_1 Polarizing Resistance.
R_2 Grid Resistance.
R_3 Fil. Resistance
R_4 Transformer Loading Resistance.
R_5 Fil. Resistance.
R_6 Coupling Resistance
R_7 Volume Control Resistance
R_8 Fil. Resistance
R_9 Plate Resistance
R_{10} Plate Series Resistance.
R_{11} Grid Resistance
R_{12} Plate Resistance.
R_{13} Volume Control Resistance.
R_{16} Listening Resistance.
R_{17} Listening Resistance
R_{18} Listening Resistance
R_{22} Listening Resistance.
R_{28} Filament Resistance
R_{29} M.O. Grid Leak Resistance
R_{31} I.P.A. Grid Leak Resistance.
R_{32} P.A. Grid Leak Resistance.
R_{33} Oscill. Resistance.
S_1 Microph. Switch.
T_1 Bullet Output Transformer.
T_2 Input Transformer.
T_3 Remote Input Transformer
J_1 Listening Jack.
J_2 Listening Jack.
L.S. Loud Speaker

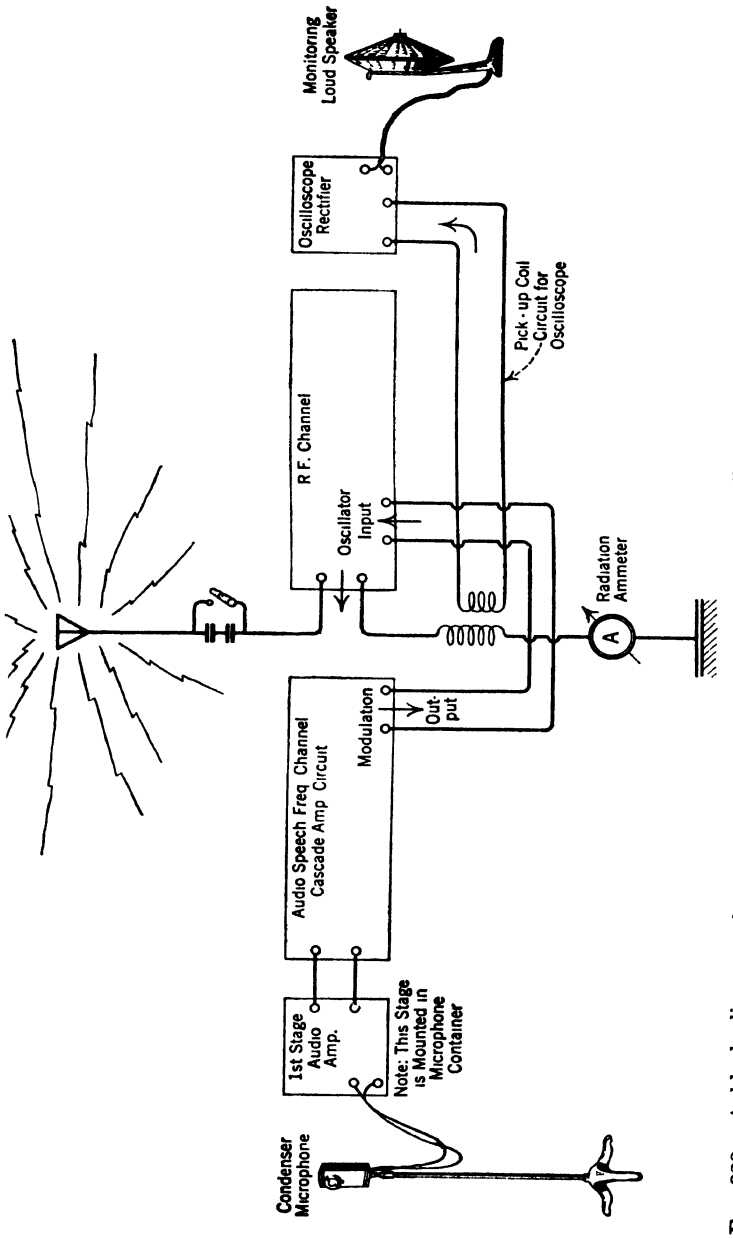

FIG. 320.—A block diagram of a 1-kw. broadcast transmitter. The oscilloscope rectifier is inductively coupled to the antenna as an effective means of checking the modulation of the broadcasted wave. See diagram in Fig. 319.

portion to its resistance changes, and the microphone circuit, being connected to the primary of an audio transformer, will supply a fluctuating direct current to the primary winding.

The rise and fall in the strength of the direct current creates a changing magnetic flux which permeates the soft iron laminated core of the transformer. As the magnitude of the flux is constantly changing, the lines of force which constitute that flux will thread through or cut through the secondary turns and induce therein an alternating electromotive force, that is, an a-c. voltage. The alternating voltage causes an alternating current to flow, and, since the current in the primary which was responsible for this transformer action was a fluctuating or pulsating one, it is evident that the induced alternating current will follow these variations as it flows back and forth or reverses its direction through its successive cycles, that is, the wave form of the alternating current will resemble the characteristics of the pressure waves impinged upon the microphone diaphragm.

It is only necessary to impress this alternating e.m.f., which is now carrying the voice frequency changes, upon the grid of a vacuum tube in order to obtain from the output of the tube a much larger current which will retain the peculiar features of amplitude and frequency of the pulsating direct current in the microphone circuit. The output current of this vacuum tube is yet too weak to be applied to the high power tubes that are to follow.

It will be observed in the diagram, Fig. 319, that several stages of straight audio amplification immediately follow the microphone. In fundamental action these amplifier tubes are all similar, their purpose being simply to set up the strength of the feeble microphone current.

Suppose that the audio signal is passed into and out of several amplifier tubes in consecutive order as suggested above. The weak energy in the microphone circuit will then be increased in power until tremendous values are obtained from the last tube. The large power amplifier tube in the last stage is, in reality, the modulator tube.

Let us bear in mind that an audio current of large power now flows in the circuits and it is varying exactly in accordance with the sound waves striking the diaphragm. This is shown in the curves in the lower left part of the drawing of Fig. 322, relating only to the transmitter circuits. Notice how the small currents from the microphone are progressively enlarged until they emerge from the last amplifier power tube, the modulator, marked Mod. The output of the modulator is carried over (as indicated by the three arrows and x) to the other section of the transmitter circuits at the right of the transmitter antenna marked Power Amp. The various curves drawn in the lower left part

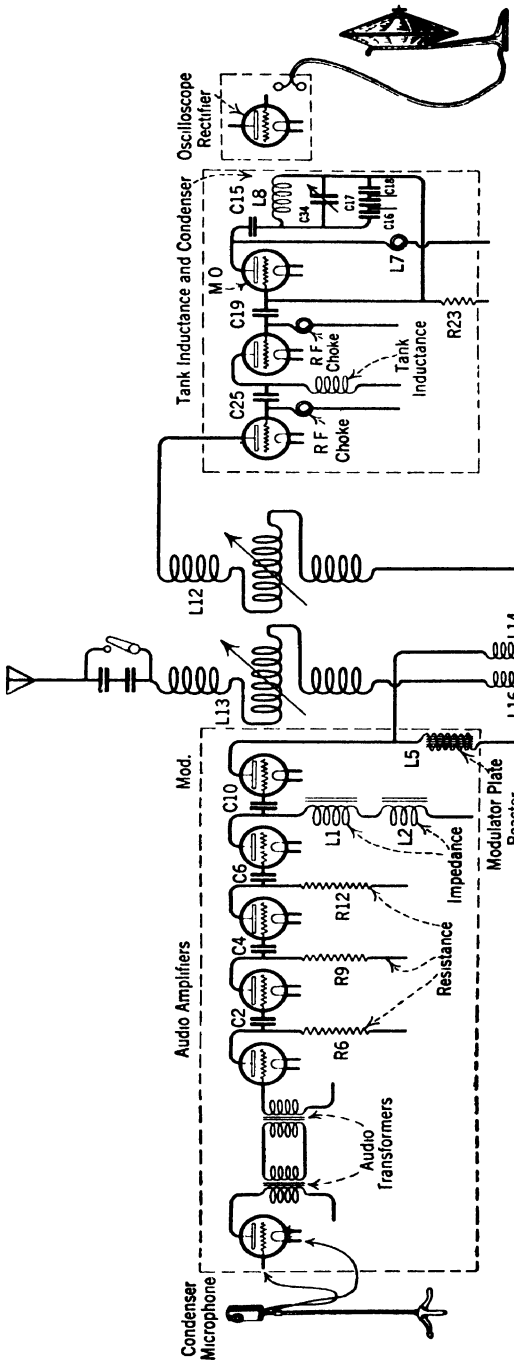

FIG. 321.—A 1-kw. broadcast transmitter. Only portions of the circuits are shown for the purpose of indicating how various kinds of coupling are employed between the vacuum tubes. The complete circuit of this broadcast transmitter is shown in Fig. 319.

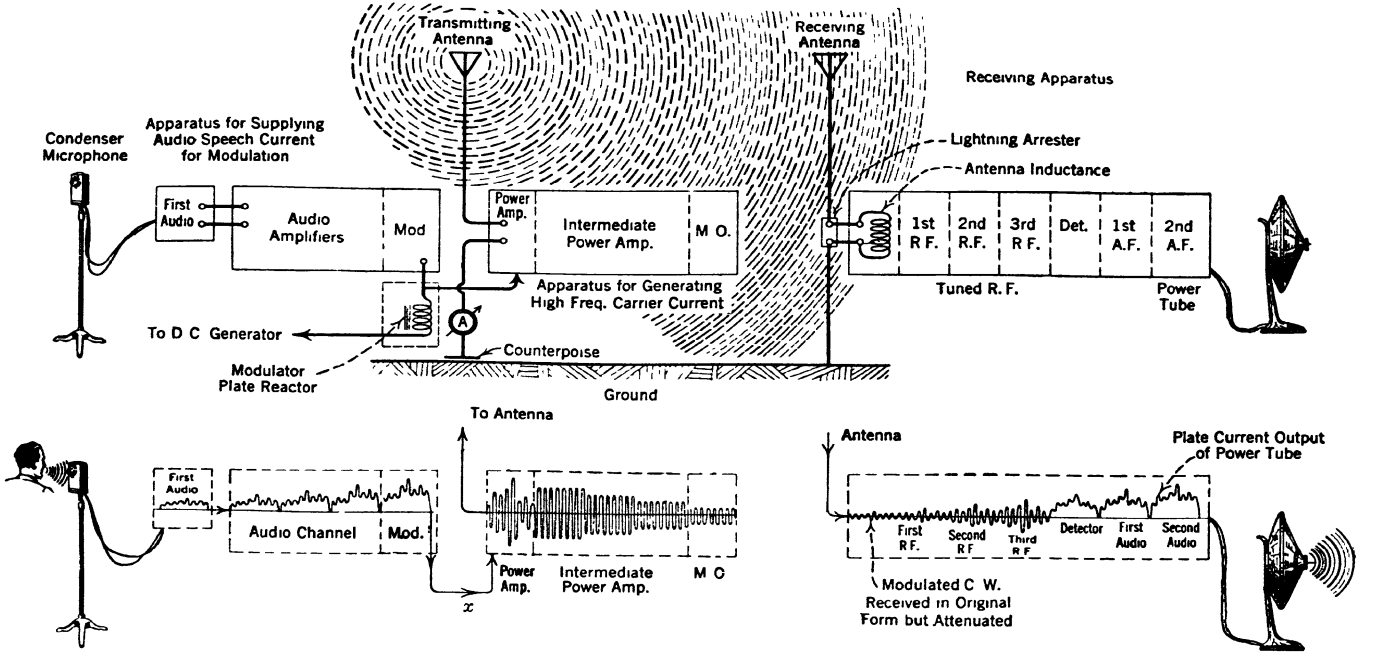

FIG. 322.—A graphical means for showing the relation of the apparatus of both a broadcast transmitter and a broadcast receiver. The conversion of sound waves directed toward the microphone into electrical impulses and the reproduction of the broadcast signal are clearly shown by the curves. The speech frequency currents passing through the audio amplifiers and modulator act upon the radio-frequency oscillations (carrier frequency) generated in the transmitter, modulating them as shown in the small dotted block marked Power Amp. The modulated carrier frequency is radiated by the transmitting antenna and, traveling through space in the form of electromagnetic waves, is intercepted by a distant receiving antenna. The broadcast energy traverses the receiver circuits from the antenna to the power tube, finally emerging from the loudspeaker as sound waves. Observe that the frequency and wave form of the sounds impinged upon the microphone diaphragm are preserved in the output of the receiver.

of the diagram from microphone to modulator show by their contour the character of the sound waves introduced into the microphone.

The irregular shape of the curves, in this audio amplifier block, with their numerous peaks and depressions are registering the fundamental and harmonics of the sound, whether it be speech or music that is broadcasted.

Since all of the energy handled thus far is varying with the input to the microphone, we may call this entire chain of vacuum tubes (in the blocked square to the left of the antenna) the *audio channel* or the *audio amplifying system.* Both expressions mean the same thing.

Now let us transfer our attention to the group of vacuum tubes to the right of the transmitter antenna in Fig. 319.

Before considering this group of tubes, it is advisable to mention a few of the requirements in regard to the generation of power, involving suitable characteristics for setting the antenna system in excitation so that an alternating electric field may be produced in the space surrounding the antenna. It is this generated power that is used to transmit voice or music through space. It is essential that a very high frequency alternating current, alternating in the order from hundreds of thousands to millions of cycles per second, be introduced into the coils (or inductances) which form part of the antenna system. These inductances, or loading inductances, are inserted in the antenna system between the aerial and the ground, or counterpoise, if the latter is used.

It is the function of the several vacuum tubes in the block immediately to the right of the transmitter antenna to generate the necessary high frequency or radio-frequency current which must flow through the wires and apparatus comprising the whole antenna. They also must build up the power of this generated high frequency alternating current to sufficient magnitude so that the strong electric field set up around the aerial will give rise to the radiation of electromagnetic waves through space.

The rate with which this generated current alternates or makes a complete reversal through the circuit per second is known as the *frequency* of the alternating current.

The station's frequency (or the number of cycles per second) is generated in the master oscillator tube circuits situated in the right block. The frequency is referred to more generally in terms of cycles rather than in wavelengths, and because broadcast frequencies are of the order of millions of cycles, a more convenient unit is used, called *kilocycles.* Kilo means one thousand. Therefore, 1000 cycles of alternating current may be called 1 kilocycle (abbreviated kc.).

The radio waves in space travel at a velocity of approximately

300,000,000 meters per second, or at the speed of light. Hence the alternating wave motion may be expressed either in terms of frequency or wavelength in meters. For example, a 300-meter wave has a frequency of 1,000,000 cycles, or 1000 kc.

Now to return to the function of the radio-frequency tubes. The aforementioned small vacuum tube which determines the frequency allocated by the Government Radio Commission is the *master oscillator*.

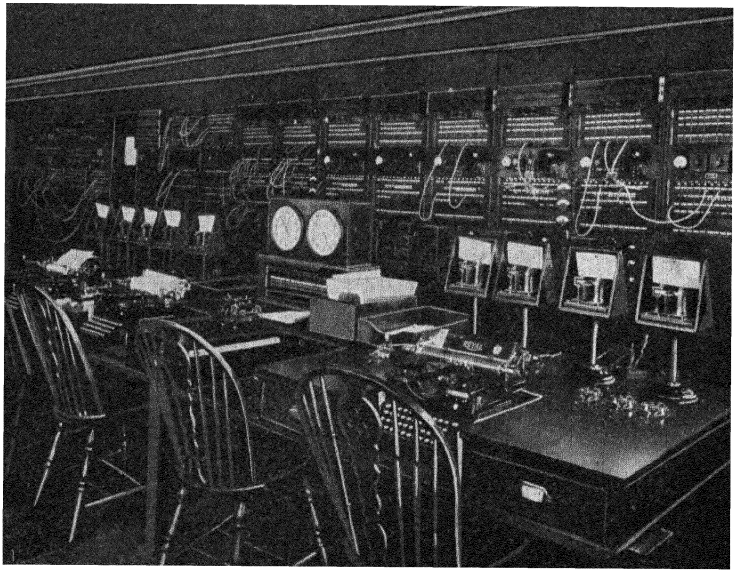

FIG. 322*a*.—The speech input control panel installed at the studio of the new WEAF broadcast station. Inter-station communication by land-line telegraph is provided between the studio at WEAF and the stations linking up the network in the chain. The sensitive meters on the control panel, called volume indicators, are shunted to the output of the amplifiers to enable the observers to check the intensity of the speech frequencies supplied to the transmitter. The control of volume, known as monitoring, is accomplished by a variable resistance (potentiometer) inserted in the input of the amplifier system.

The master oscillator is associated with an oscillatory circuit (composed of inductance and capacitance, or in other words, coils and condensers) of suitable design to produce the continuous alternating current which, as we previously stated, is one of the essential requirements. Another requirement is that we obtain from the circuits connected to the microphone a voice frequency current of large power.

The frequency of the alternating current may be controlled by

altering some one of the constants of the circuits, as, for example, by changing the size of the coil, by varying the number of turns used on the coil, or by varying the capacity of the condenser when moving its rotatable plates. This process is called *tuning*. The purpose behind this tuning process is to obtain the required frequency from the master oscillator circuit assigned to the station by the government. It is, in brief, the *frequency-determining* part of the transmitter.

Since the alternating energy in the master oscillator circuits is produced at very high or radio-frequencies, we may call this high frequency an *oscillating current* or simply *oscillations*. The curves of the oscillations in the diagram of Fig. 322 indicate by the uniformity at which they occur that the energy is a continuous one, as shown in the dotted blocks marked M.O. and Intermediate Power Amp. Each cycle is produced in the same time and the peaks or heights of the different oscillations are all equal. Consequently, this high frequency alternating current is known as *continuous alternating current*. When it is fed into the antenna circuits it causes a *continuous wave* (c.w.) to be propagated or radiated away from the antenna through space, provided the microphone is not in use.

The master oscillator is operated at a low plate potential and its output of power is limited. Its function in the transmitter is only to generate and dictate the frequency of the transmitted wave, as previously stated.

In order to furnish an antenna system with sufficient power to cause it to radiate a radio wave, it is necessary to use several vacuum tubes between the master oscillator and the high power amplifier. We are now interested in the tubes in the upper block to the right of the transmitter antenna shown in Fig. 322. Their purpose is to build up the power of the output of the master oscillator to a suitable size for antenna excitation; consequently, they are called *intermediate power amplifiers*. The function of these tubes is depicted by the curves which show a stream of oscillations of *constant amplitude* being generated. As the oscillations are passed through each tube in progressive order, they are gradually increased in amplitude. The tubes in this branch all operate with an amplifier characteristic, each one merely stepping up the power in the oscillations.

Let us make it perfectly clear that the two main requirements mentioned previously have been satisfied; namely, that the voice frequency energy originating in the microphone circuit is now flowing from the modulator tube with large power and that the continuous alternating currents of high frequency necessary for the purposes of wave propagation are feeding into the power amplifier tube with tremendous strength.

We will now discuss the action upon which it is possible to combine

these two energies and thus radiate a wave having the characteristics of both. This process is called *modulation,* or modulating the radio-frequency current by superimposing the audio-frequency current upon it. The principle of this action will now be outlined.

The modulator and the power amplifier are connected together so that the direct current supplied to either tube flows through the same common power lead coming from the positive voltage side of the d-c. generator as shown in Fig. 321. A very heavy iron core coil L5 is

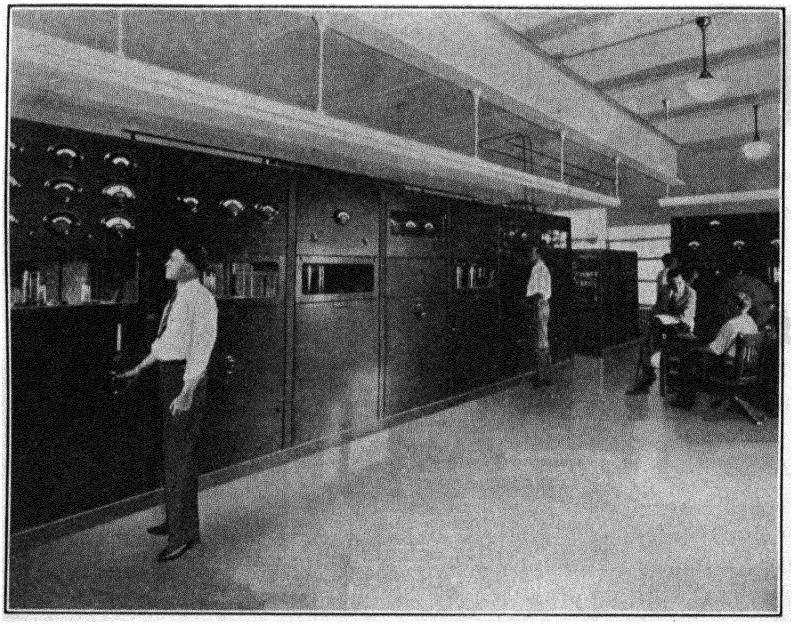

FIG. 322*b*.—A view of the 50,000-watt Western Electric broadcast transmitter at WLW near Mason, Ohio.

inserted in series with this supply lead. The coil will build up a large magnetic flux through its core, thus tending to prevent any change in the strength of the direct current flowing in its windings, under ordinary conditions. This coil, composed of a great many turns of wire mounted over an iron core, is called the *modulator plate reactor.*

The combined modulator and power amplifier together with the modulation plate reactor (the iron core choke coil) provides an arrangement for the audio-frequency reproduction on the continuous oscillations and makes possible the transmission of a speech modulated wave in a system invented by Heising.

The line x in Fig. 322 with the arrows shows by its direction that the output of the modulator is feeding into the input of the power amplifier. If the modulator tube is made to draw more or less current, according to the irregular variations of the audio signal, the power amplifier will be forced to take the difference between the modulator current and the current supplied through the plate reactor. This is to be expected, because the d-c. current supplied to the plates is maintained at a practically constant value by the plate reactor.

This audio rate of change in the direct current drawn by the oscillator is going on at the same time that the oscillator is producing radio oscillations at a constant frequency. Therefore, the strength of the oscillations will vary, but they cannot become larger or smaller than the amount of direct current flowing through the tube at any moment.

This is why the stream of oscillations continues at radio-frequency while, at the same time, their amplitude heights change with the voice wave. The principle of this action, whereby the peaks or amplitudes of a continuous alternating current are varied, is called modulation, as previously stated. The complex wave resulting from modulation is illustrated in the block marked "Power Amp." and the arrow leading to the antenna indicates that this modulated energy will produce an electric wave in space having similar characteristics. The important point in connection with the modulation of the carrier current has been brought out. Inspection of the curves in Fig. 322 reveals the similarity between the oscillations in the output of the power amplifier and the oscillations produced by the master oscillator. The only difference in the power amplifier output lies in the fact that the *amplitudes* (*heights or peaks of its oscillations*) *are no longer uniform or smooth topped, as in the curves to its right, but they vary according to the contour or wave form of the audio or speech current received from the output of the modulator.*

Hence, we have only to couple the power amplifier output to the antenna. The modulated continuous oscillations flowing through the antenna circuit will cause a powerful modulated continuous radio wave to be projected through space, traveling in all directions. The radio waves, however, travel better in some directions than in others, as most of us are aware. This phenomenon is dependent upon the directional characteristics of the antenna and nature's own peculiarities.

The continuous radio-frequency current that is "carrying" the voice frequency is a complex wave. The *carrier frequency* is the frequency generated by the master oscillator.

Exactly what happens in the intervening space between the transmitter antenna and the receiving station antenna is not a matter of knowledge. But it is thought by scientists and other investigators that

an electromagnetic wave having all of the characteristics of the modulated continuous current flowing in the transmitter antenna travels upward at an angle toward the higher atmospheric regions as well as along or close to the ground, or near the earth's surface.

However, we know that the receiving antenna will pick up this radio wave. This is known as the *induction of the electromagnetic energy into the wires of the receiving aerial.*

The modulated continuous current induced in the receiving antenna is illustrated in Fig. 322 by the first curves pictured in the block



FIG. 322*c*.—A general view of the 32 water-cooled tubes with which the WEAF transmitter at Bellmore, Long Island, N. Y., is equipped. The water circulates through the coils of rubber hose at the base of each tube. Each tube is equipped with a relay which drops and displays a small white disk in the case of tube trouble.

illustrating the receiving set. Observe that the incoming energy still maintains the same frequency (the carrier frequency), and the same wave form or contour as when emanating from the transmitter antenna, but due to the great distance the wave has traveled, the energy in the receiver is markedly attenuated. This simply means that the incoming signal is considerably lowered in strength as compared to the transmitted signal.

The incoming speech modulated oscillations flow through the coil marked " Antenna Inductance " in the receiving set. It is in this way

that the signal from the distant broadcasting station is introduced into the receiver.

The facts that follow are generally well known. They deal only with the receiving set. The function of the receiver is to build up the attenuated wave form through one or more stages of radio-frequency amplification to a suitable voltage for application to the detector grid and next to amplify the detector output to a value sufficient to actuate the loudspeaker mechanism. The curves illustrating the signal current as it flows through the receiver convey the idea that the signal energy increases in strength as it progresses through the different tubes. The first, second, and third tubes of the receiver are radio amplifiers and the third radio amplifier delivers its output to the detector grid.

The radio-frequency amplifier stages are tuned by means of variable condensers which generally are connected in tandem, or in gang construction, in order that the number of tuning controls may be minimized. The receiver circuits are adjusted by the tuning dial to possess the same frequency as that of the carrier frequency of the transmitted wave, thus placing the receiver and the transmitter circuits in resonance. When this condition is obtained, a maximum current from the broadcast signals will flow in the output of the receiver.

The detector will convert, or will produce in its output circuit, a fluctuating direct current similar in all its characteristics to the fluctuating direct current flowing in the microphone circuit at the distant transmitter. The function of a detector tube is to convert or alter the high frequency modulated wave into a current suitable in form to actuate the loudspeaker. The diaphragm of the loudspeaker could not move with the rapidity of the radio oscillations and herein lies the necessity for the detector.

Only the audio-frequencies now flow from the detector and are carried through one stage of audio amplification and next through a second stage, the latter usually employing a power tube.

The loudspeaker is connected in the output circuit of the power tube of the receiver. The speaker will reproduce, or translate, the fluctuating current carrying the voice changes into sound waves. Its purpose is exactly opposite to that of the microphone, for the latter translates sound waves into electrical impulses.

As a final suggestion it is recommended that the student inspect closely the shape or contour of the varying current in the output of the microphone at the extreme left of the diagram of Fig. 322 and then make a comparison with the shape or form of the current wave at the extreme right in the output of the receiver-power tube. It will be seen that the waves are exact duplicates of each other, or facsimiles.

This completes the chain of incidents from microphone to loudspeaker which gives the reproduction of the original program.

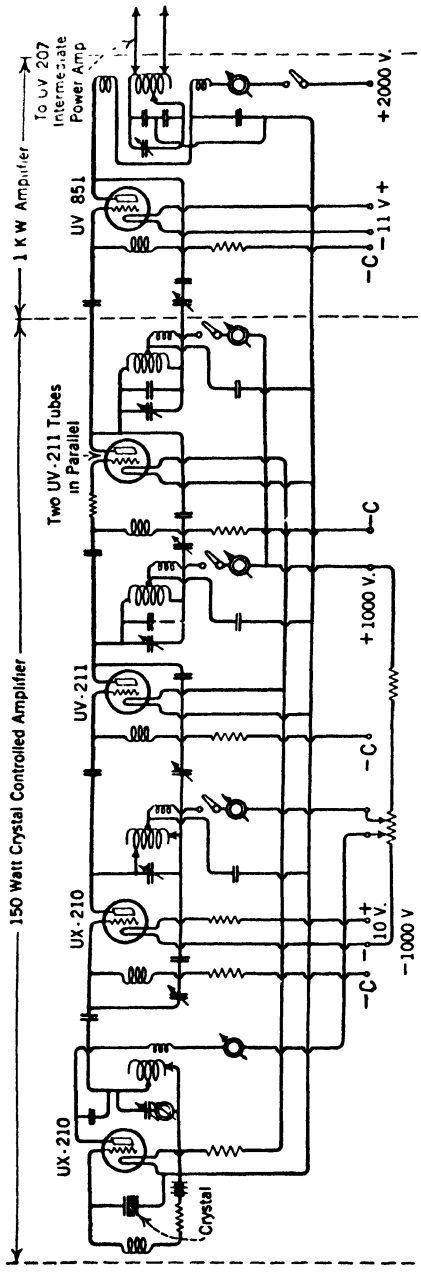

Fig. 323.—A crystal controlled oscillator with its accompanying intermediate and power amplifier circuits.

(9) **General Features.**—A survey of the features of the modern broadcast transmitter is as follows:

(*a*) Piezoelectric control (crystal control) of the station's frequency. Refer to Fig. 323 illustrating a schematic diagram of a crystal-controlled amplifier unit.

(*b*) The use of radio-frequency power amplifiers and intermediate power amplifiers.

(*c*) A high percentage of modulation (depth of modulation). (Heising system of modulation.)

(*d*) The use of either water-cooled or air-cooled power tubes.

(*e*) The employment of a series antenna condenser to work below the fundamental (see schematic diagram, Fig. 319, of 1-kw. broadcast transmitter.)

(*f*) The excitation of the transmitter through feeder-lines connecting from the output or tank circuit of the power amplifiers or main power amplifiers when the latter are used.

(*g*) The frequency doubling features for utilizing one of the harmonics generated by the master oscillator or the piezo-electric circuit to provide the carrier frequency.

the tube and its associated oscillatory circuit will become a generator of radio-frequency oscillations. The damping is the dissipation of energy in the circuit due to resistance, and other causes. The alternating voltage referred to is produced by the alternating component, the rise and fall of the plate current as it flows through plate coil L_2. The long arrows indicate the direction of current flow through the plate circuit and also the direction of the grid current. Note that the practical term *current* is used to simplify the explanation. We are interested only in the direction of the *current flow* through L_1 and L_2 and the effect of the *self-inductance* of L_2 upon L_1 in producing an alternating voltage across L_1.

First, let us bear in mind that the total current flowing in the plate circuit of a tube, when oscillating, is a pulsating direct current consisting of an alternating component and a direct component. The alternating component is represented by the rise and fall or alternations of the direct current. It is this part or component of the plate current that is utilized in setting up a changing magnetic field in L_2 causing an alternating voltage to be induced across the coil's winding or between P and F. Since coil L_1 is connected to L_2 at F, the alternating voltage will cause an alternating current to flow through oscillatory circuit LC. The alternating current in L_1 is opposite in phase, 180 deg. difference, with the alternating component of the plate current in L_2. This is readily apparent upon observing the direction of the arrows through L_1 and L_2. This change in phase between an exciting current and an induced current flowing through the winding of the auto-transformer L is due to the direction of the turns on L_1 and L_2. The turns are wound exactly alike. The direction of the current, however, in the plate coil section L_2 is opposite to that in grid coil section L_1, as shown in the drawing above the diagram, Fig. 325. The direction of the flux produced about each coil is opposite as shown in the upper sketch, which is merely a suggestion.

Next observe that the inherent characteristic of a vacuum tube produces a change of 180 deg. between the flow of grid current with regard to the current in the plate. The direction of the arrows in the plate and grid circuits show this. The oscillating current passing through LC causes an alternating voltage to be set up across coil L_1 or between points G and F. Since the grid is connected to one side of L, as shown, the grid receives this induced e.m.f. and reinforces the alternations in the plate circuit. Hence the plate coil supplies the alternating e.m.f. to reinforce the oscillations and the coupling between L_1 and L_2 furnishes the alternating voltage to the grid. The principal point to be mentioned here is that the reimpressed voltage on the grid is in phase

with the normal grid current flow, or, in other words, the energy from the plate circuit, fed back to the grid circuit in the form of induced oscillating current, aids the original grid current because the tube changes the phase of the current 180 deg. and the action of the auto-transformer L also changes the phase of the respective plate and grid currents 180 deg. Therefore, in actual effect the total change is 360 deg., which is equivalent to no change in phase at all. This relation of the plate and grid circuits with regard to the phase of the currents is mentioned because it is known that the plate circuit must furnish energy to the grid in such a way that the current flowing to the grid must excite the grid to a higher potential to cause the necessary change in plate current in order to make the action retroactive. This means that any change in conditions of the tube circuits which might cause a variation either in plate current or grid current, no matter how small, will increase in amplitude owing to the feed-back and progressive amplification of the tube.

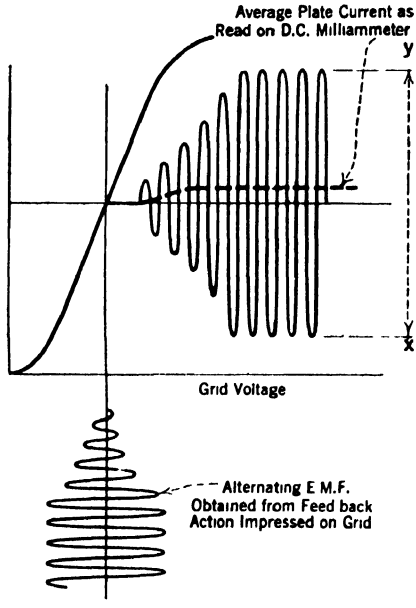

FIG. 326.—Showing the rapid building up of oscillations in an oscillator circuit when the correct feed-back from plate to grid is maintained. The average plate current may vary from that shown.

The curves illustrated in Fig. 326 show the growth of the oscillations or alternations in the plate circuit which reach a limit shown from y to x, as determined by the plate-voltage grid-voltage characteristic.

In Fig. 327 the alternating current and alternating voltage relations in the plate and grid circuits are given. They illustrate how, due to the change in phase, as explained in the foregoing paragraphs, the original grid voltage, as shown in the top curve, is in phase with the reimpressed voltage due to feed-back as shown in the lower curve.

Instead of utilizing a single inductance tapped in the center, as shown in Fig. 325, to provide proper relations between the plate and grid, another circuit modification can be arranged which employs a strictly inductive coupling, one type of which is given in the diagram of Fig. 328. Here we find plate coil L_2 inductively coupled to grid coil L_1. The coupling between L_1 and L_2 is purely magnetic. The two draw-

ings above the fundamental diagram illustrate the mechanical positioning of the plate and grid coils necessary to provide the correct phase relations between the energy in the plate and grid circuits. In either of these two types of feed-back circuits, a phase difference of 180 deg.

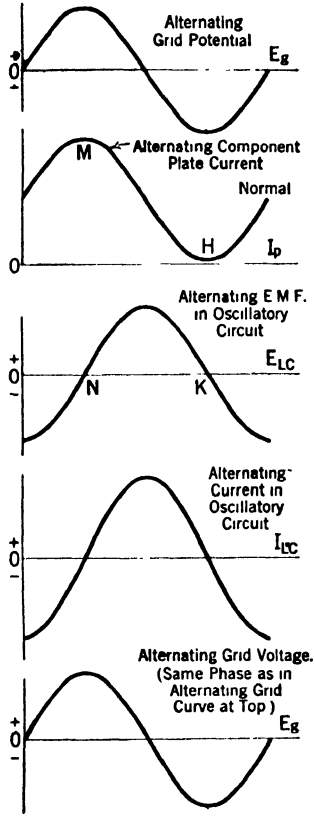

FIG. 327.

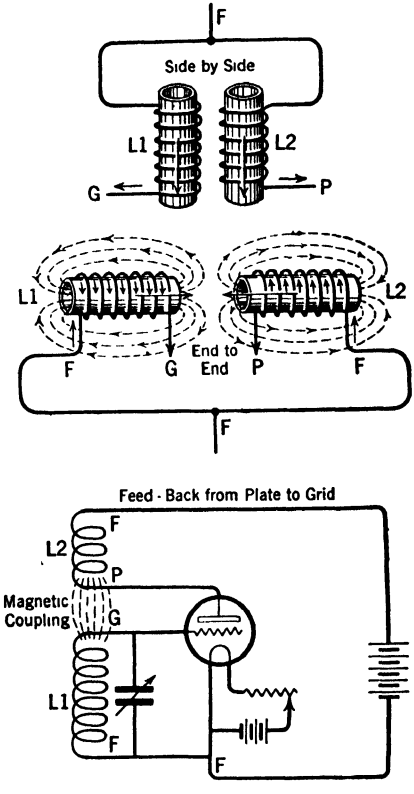

FIG. 328.

FIG. 327.—Curves showing the various voltage and current relations in a vacuum tube oscillator.

FIG. 328.—A type of feed-back circuit utilized for the generation of continuous r.f. oscillations. This elementary drawing is for the purpose of showing the grid and plate coils in different relations.

exists between L_1 and L_2 and the conditions are right for the generation of continuous oscillations. In one of the drawings the coils are arranged side by side, in the other view they are in a position with regard to each other which is called "end to end." Note that the flux set up around the coils, in either case, is opposite in L_1 to that in L_2. A simple step-

by-step explanation of the oscillator action is given in the chapter embracing receiving circuits.

Colpitts Oscillator.—The circuit diagrams in Fig. 329 are all modi-

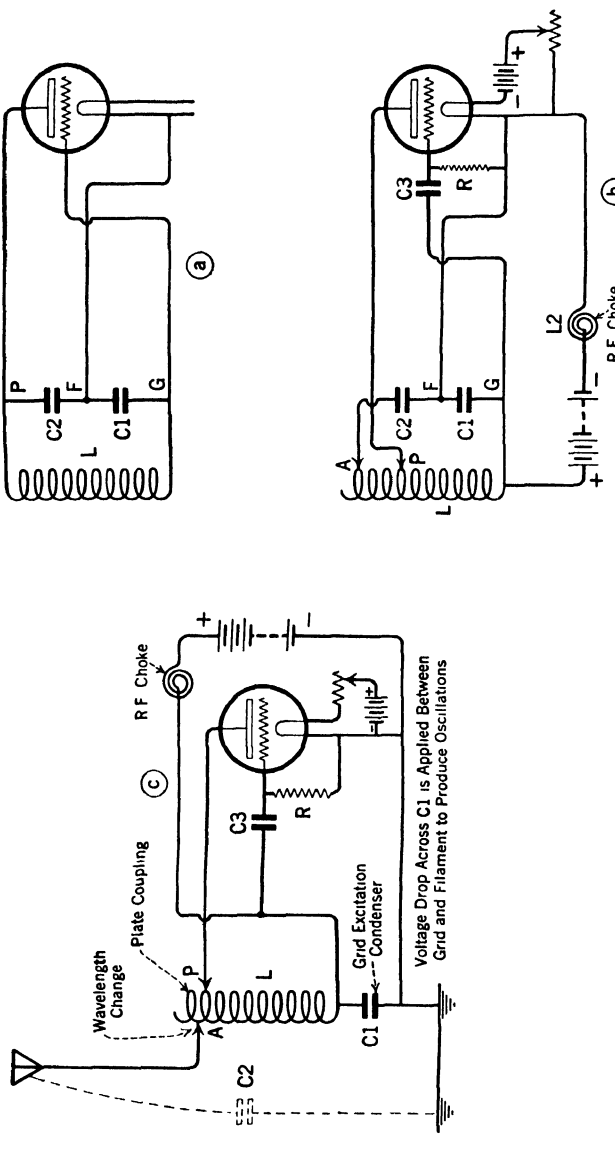

FIG. 329.—Fundamental arrangement of the Colpitts oscillator circuit. Drawing (*a*) illustrates the principle of how the grid excitation voltage is obtained; (*b*) the same circuit with power supplied, and (*c*) how this circuit may be coupled to an antenna or radiative system. *Note.*—Conductive antenna coupling is shown here only for the purpose of explanation.

fications of the Colpitts type oscillator. The fundamental action of the vacuum tube in generating continuous oscillations, when properly connected to circuit elements, is similar to other types of oscillator cir-

cuits. The difference between the Colpitts circuit and other types is mainly in the method utilized to obtain the requisite grid alternating voltage.

Observe that in each of the diagrams condenser C_1 is connected between grid and filament and that the filament lead F joins the center of the total capacity of the oscillatory circuit. In each diagram condensers C_1, C_2 and inductance L constitute the oscillatory circuit. In this type of oscillator circuit it is necessary to employ two condensers connected in series and in turn connected across the total inductance L with the filament joined at a point between the two condensers.

The alternating component of the plate current passing through L sets up an oscillating current in circuit C_1, C_2 and L. Hence, an alternating voltage (or voltage drop) is obtained across C_1 for direct application between grid and filament, for these electrodes are connected to C_1. The feed-back is obtained from the electrostatic field in C_1; therefore this type is referred to as *capacity feed-back*. Condenser C_1, used to excite the grid, for this reason is generally termed the *grid input* condenser or the *grid excitation* condenser.

A statement of the principal difference between the Hartley or inductively coupled type and the Colpitts or the capacitive coupled type follows:

The requisite grid excitation voltage in the Hartley type is obtained from the voltage changes (called drop in voltage) across an inductance, the inductance being the grid coil. The coil is connected between grid and filament.

The Colpitts circuit depends for its operation upon the voltage changes (called voltage drop) obtained from across the grid excitation condenser when alternating current is flowing. This condenser is connected between grid and filament.

Tuned Plate Circuit Oscillator.—Regeneration.—It is not essential that inductive regenerative coupling be employed, as, for instance, when the plate circuit is magnetically coupled to the grid circuit, for the production of beat currents in the reception of continuous waves. Another system utilizes the inherent capacity always present in a three-electrode vacuum tube in order to provide the necessary coupling between the plate and grid circuits.

When electrostatic coupling is employed so that some of the energy released by the plate circuit may be fed back into the grid oscillating circuit, the system demands that the plate circuit consist of tuned elements, either a variable inductance and a condenser or a fixed inductance and a variable condenser.

The principal feature in one circuit of this type, utilizing internal

tube capacity, is that an inductance and a condenser are first joined in a parallel arrangement and this tuned circuit is then connected to the plate circuit. This circuit provides for resonance between the plate and grid circuits in order that the feed-back e.m.f. caused by the plate variations will take place in synchronism with the oscillations. If the circuit is carefully tuned, the feed-back will occur at the proper time to assist the plate variations, thus increasing their final amplitude and maintaining oscillations.

Tuned-Grid Tuned-Plate Oscillator Circuit. — The self-capacity between the plate and grid electrodes in a vacuum tube supplies an easy route for the feed-back of energy from the plate to the grid circuit resulting in the production of continuous oscillations, as we have already

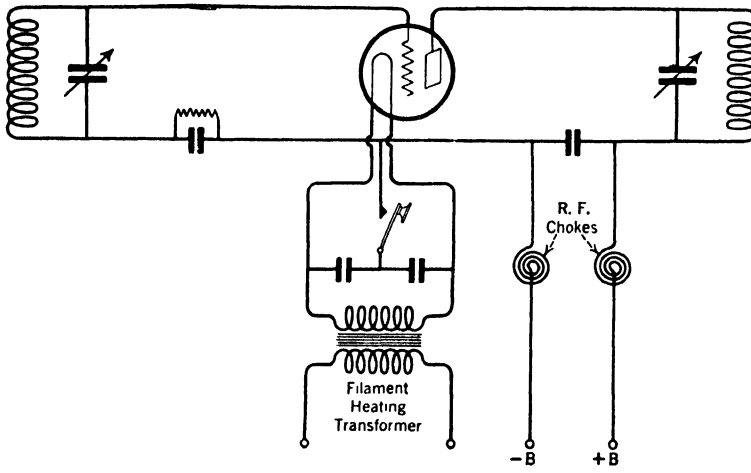

FIG. 330. Series feed type tuned-plate tuned-grid oscillator.

mentioned. The tuned-plate tuned-grid circuit in Fig. 330 is known as a series feed type.

The action of the circuit is substantially as follows: When an electric field surrounds the plate of a vacuum tube it will influence any other electrode within a certain distance. The grid electrode lies within the influence of the plate field. The plate normally holds a high positive charge of constant value. Now suppose a coil is inserted in the plate circuit and then some means is provided to change the value of the current passing through the coil. The coil will generate a reactance voltage across its winding, due to the self-inductance of the coil in opposing any current change flowing through it.

This new voltage (induced e.m.f.) in the plate circuit will act either to increase or to decrease the normal potential of the plate. Conse-

quently the electric field of the plate will also change. The changes in the potential of the higher charged body (the plate always holds a charge much stronger than the grid) will also cause the potential on the grid to change. Here we have the plate circuit reacting upon the

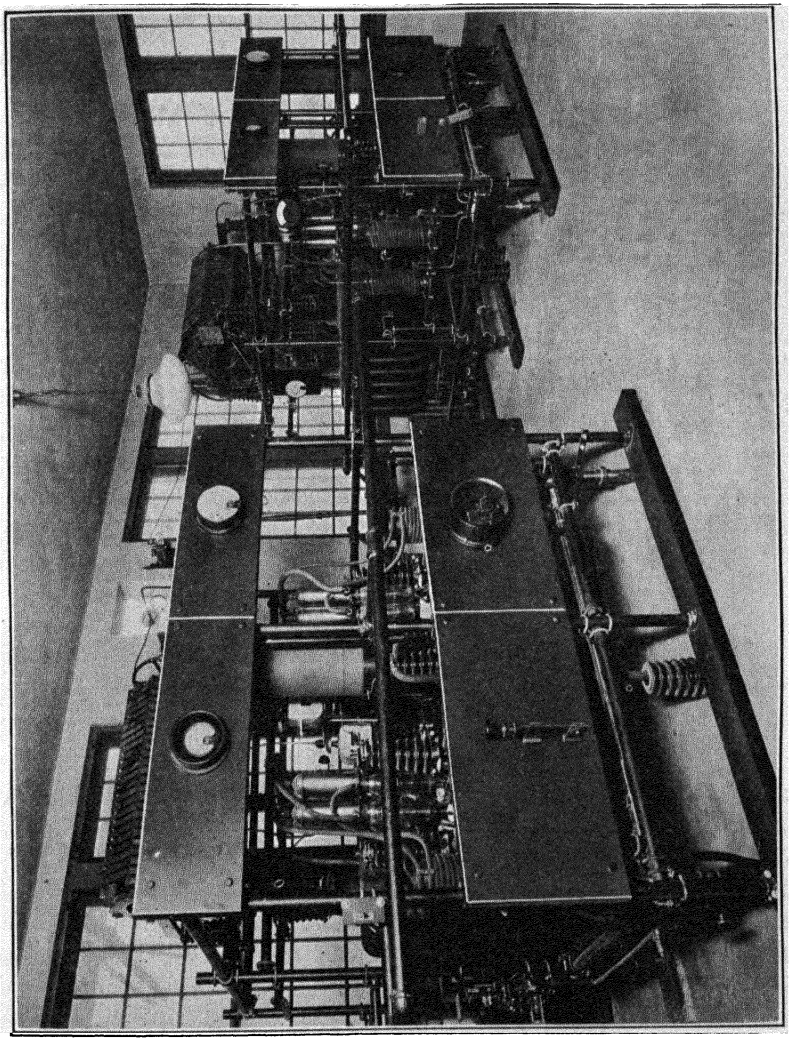

FIG. 331a.—The oscillators at WJZ.

grid or input to the tube brought about by the electrostatic coupling between the elements. Hence, if the plate circuit is properly constructed and the grid circuit also is formed with values of inductance and capacity which make the two circuits resonant ones, then this

change in grid voltage, when it returns to normal, when the plate current change originally referred to also returns to normal, will cause another variation in plate current to take place. This time the grid voltage in returning to normal causes another plate current change.

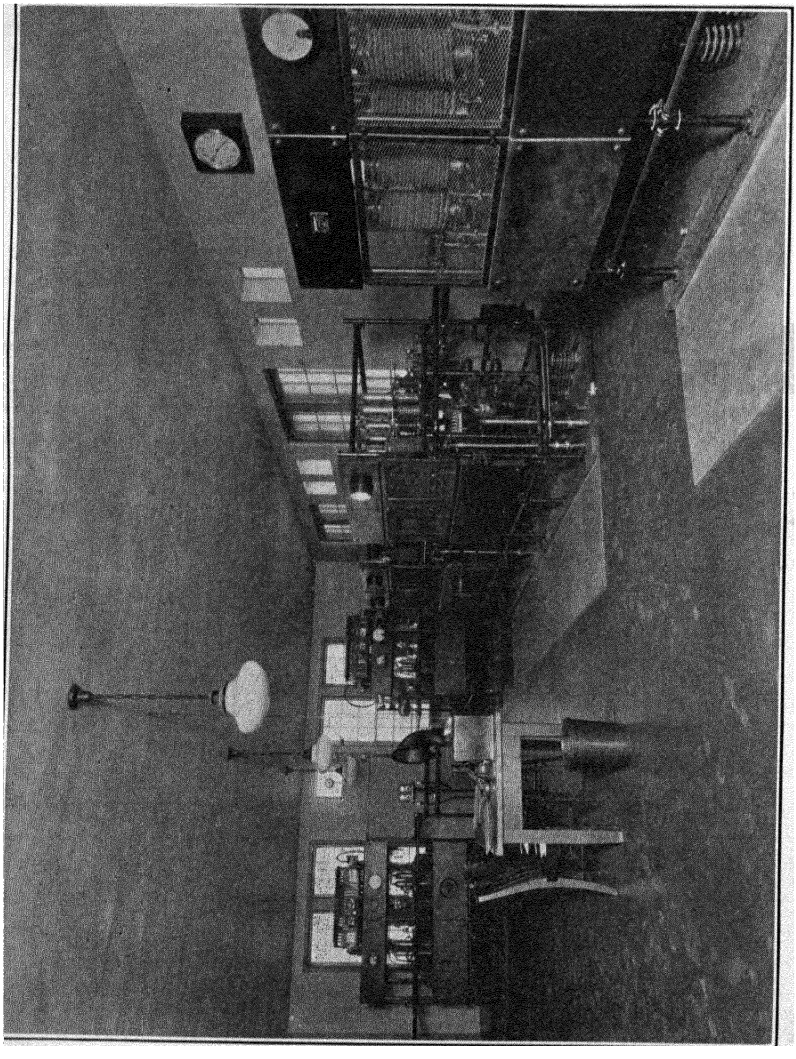

FIG. 331b.—Transmitting room at WJZ.

It is evident that the plate is supplying energy to the grid and the grid is in turn causing the plate current to vary. Or, in other words, the feed-back of plate energy is exciting the grid continuously and oscillations of constant amplitude will be produced.

Any change in adjustment or conditions which might cause the plate current to change in the first place will set the tube into excitation, for instance, varying one of the tuning condensers or perhaps due to the first change in plate current as it rises from zero when the filament circuit switch is closed until the current reaches what would have been a normal steady flow had not the coupling between the electrodes caused further changes.

Neutralizing Inter-Electrode Tube Capacity.—Because of the inherent capacity between the grid and plate of a vacuum tube when the electrodes are impressed with an electric potential, it does not operate satisfactorily in radio-frequency circuits where regeneration or oscillations are not desired. In a regenerative circuit the building up of, or amplification of, a signal is always under control, whereas in a radio-frequency amplifier, the building up of the signal energy through the natural action of the tube is very difficult to control.

The inductances and condensers which form the oscillatory circuits of vacuum tube amplifiers together with the self-capacity between the tube elements, embody all the features necessary for the generation of oscillations. Such circuits will oscillate readily, resulting in unpleasant howling noises and other undesirable conditions.

There are several expedients by which uncontrolled oscillations in a radio-frequency amplifier circuit may be suppressed. One system employs a resistor inserted in series with the grid circuit. This resistance will absorb or dissipate the energy in free oscillations caused by the feed-back through the tube electrodes, that is, between plate and grid. A resistor of suitable size from about 200 to 800 ohms is used.

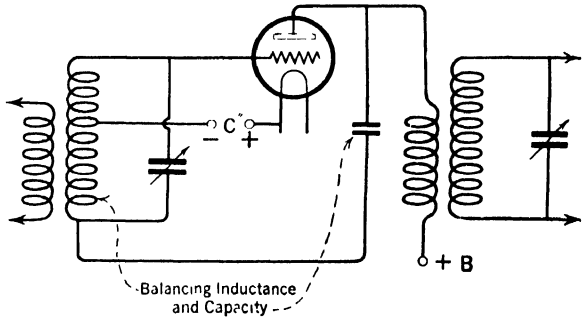

FIG. 332.—One of the methods employed for neutralizing a radio-frequency amplifier circuit.

Another method prevents feed-back current from flowing by neutralizing or canceling the self-capacity effect of the tube. Figure 332 illustrates a system to neutralize tube capacity by utilizing the tube's own tuned circuits, operating in conjunction with a balancing condenser and balancing inductance. The condenser is connected between plate and one end of the balancing inductance.

Some form of neutralization is necessary in a radio-frequency amplifier circuit to nullify the effect of the grid to plate capacity in a vacuum tube by producing a voltage which opposes the voltage developed between the tube electrodes and thereby eliminating inter-tube capacity or self-oscillation. A schematic diagram showing one circuit arrangement necessary to provide plate circuit neutralization is illustrated in Fig. 332. The purpose of the neutralizing coil and condenser is to produce a *current of exactly equal amplitude,* but *opposite phase,* to that flowing through the tube due to the capacity existing between the grid and plate.

Now then, the electrical values of the neutralizing circuit must be balanced in order to obtain a condition of equal current amplitude. This condition is readily arrived at by designing the neutralizing coil and grid coil with equal amounts of inductance and by employing an adjustable neutralizing condenser whose capacity value can be set to equal the grid-plate capacity of the tube, plus stray capacities.

The process of neutralizing a radio-frequency circuit is simply one of obtaining the correct neutralizing condenser capacity. Before endeavoring to neutralize a radio-frequency circuit we must first render the tube incapable of any amplifying action. This may be done by using a tube which is perfect in every respect, but operating it with a cold filament so that the only coupling between the input and output circuits is through the capacity coupling of the tube itself.

The supply of heating current to the filament of the tube may be stopped in one of several ways. One side of the filament circuit of the tube to be neutralized may be opened either by inserting a piece of paper between the tube prong and socket contact, or by employing a special tube with one filament pin sawed off. The special tube must be one of similar type to the regular tube it replaces when neutralizing the circuit. It has often proved convenient to place a short length of an ordinary soda fountain drinking straw over one of the filament pins in the UX type tube in order to insulate the pin from the spring contact in the socket.

The neutralization of the circuit consists of supplying a strong signal (preferably from a local source by means of an audio oscillator similar to one described in this chapter) to the input or grid circuit and adjusting the neutralizing condenser until minimum or no signal is reproduced in the output. The inter-electrode capacity of the tube and stray capacities are balanced out or nullified when the condition of minimum or zero signal is obtained.

The Wheatstone Bridge.—In Fig. 333 is illustrated a very simple and useful bridge circuit for measuring unknown resistances by com-

parison with known resistances. The measurements of capacity and inductance, with proper equipment, may be carried out similarly. In the illustration the battery supplies potential across the bridge circuit between A and B. The current divides across two branches ACB and ADB. The voltage across A and B is the same as that across both branches.

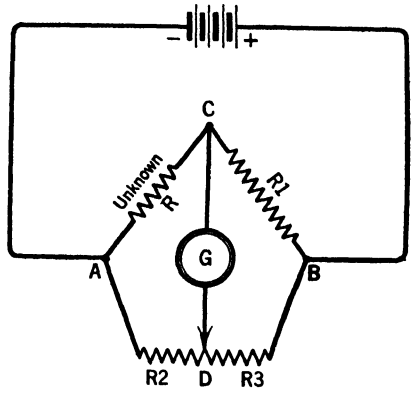

FIG. 333. —This is a conventional circuit arrangement of a wheatstone bridge.

Remembering that the voltage drop across a resistance depends upon the value of the resistance and the current flowing through it, we know that for some point on the circuit ACB, such as the point C, there is also some point on the circuit ADB which is at the same potential. Then, the unknown resistance is inserted between A and C, and a known resistance R_1 somewhere near the value of the unknown resistance R is inserted between C and B.

It may be said that the path ACB is a continuous resistance path and also the path ADB is a continuous resistance path. A galvanometer, which is a sensitive direct current reading instrument, is connected between C and D. The connection at D is made variable so that it can slide along the continuous resistance R_2 and R_3. When the connection D is first placed on the resistance, a deflection on the galvanometer will no doubt be observed, but, if we slide the clip D along the resistance wire, a point will be found where the galvanometer shows no deflection. This would indicate that, since there is no current flowing through the galvanometer, there cannot be any difference of potential, or zero voltage between C and D. The resistance bridge is then balanced.

If we know the value of the resistances, represented by the symbols R_1, R_2, R_3, then the value of the unknown resistance, R, may be found by calculating the ratio of the relative sides of the bridge. Hence R is to R_1 as R_2 is to R_3. Now, in order to determine the value of the unknown resistance R, we can employ the following equation:

$$R = R_1 \times \frac{R_2}{R_3}.$$

A similar circuit is shown in Fig. 334, but this time the purpose of

balancing the bridge circuit is to find the capacity value of an unknown condenser. This bridge circuit is composed of non-inductive resistance coils and condensers. The alternating current which flows through the two parallel paths of the bridge is obtained from the secondary of a transformer, an alternating current being supplied to the input or primary side. The unknown condenser is connected in the branch of the circuit between A and C. The alternating current which flows through this condenser must also flow through resistance coil L_1. A standard variable condenser calibrated in units of microfarads is connected in the other branch of the circuit ADB.

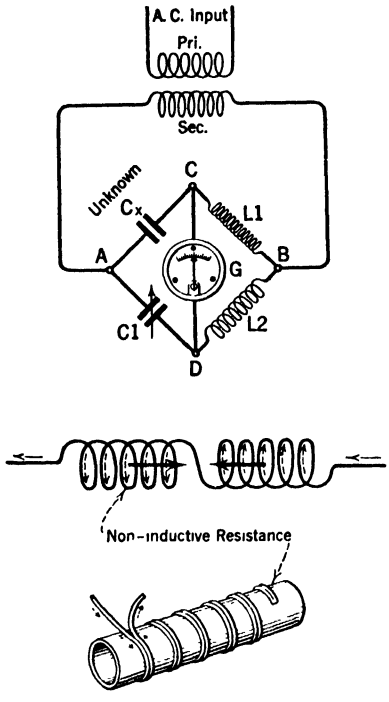

Fig. 334.—One method of setting up a wheatstone bridge circuit. The two lower views show how a resistor may be wound in order to make it non-inductive.

When an alternating current flows through the circuit and condenser C_1 is adjusted until no current flows in the galvanometer, a condition of zero voltage exists across the bridge from C to D. The capacity of the unknown condenser can then be found, and the various quantities are related as follows:

$$\frac{C_x}{C_1} = \frac{L_2}{L_1} \text{ or } C_x = C_1 \times \frac{L_2}{L_1}.$$

In order that the frequency of the alternating currents flowing through the two paths ACB and ADB may not affect the measurements, the coils L_1 and L_2 should be non-inductive resistances of low value.

A non-inductive resistance coil is defined as one in which one-half of the winding is wound back on itself in such a manner that the magnetic field of one-half of the coil opposes the magnetic field of the other half of the coil, tending to neutralize the total field, as illustrated in Fig. 334. Several methods are used to wind a coil in this manner, but the outline given here illustrates only the principle of operation. Small arrows in the drawing indicate the direction of current flow in the two halves of the coil, and the large arrows indicate the direction of the magnetic fields, making it evident that they are both opposed. The d-c. galvanometer must be connected to a thermo-couple junction to

operate in an alternating current circuit. The junction is composed of two dissimilar metals, as bismuth and antimony, and because of the heating effect, when alternating current flows through the junction, an electromotive force is produced which will cause direct current to flow in the galvanometer. The alternating current does not flow through the meter windings. The current which flows through the meter windings is d-c. due to the voltage generated by the thermo-couple.

The foregoing bridge circuits are useful in determining the values of unknown condensers, resistances and inductances, and this principle is the one used in balancing or neutralizing the effective grid and plate capacity of a radio-frequency tube.

Coupling Oscillating Circuits.—One of the oscillators described in

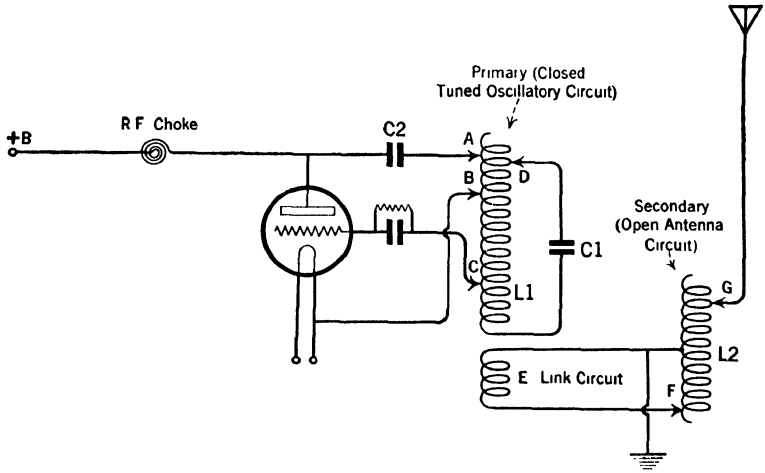

FIG. 335.—Showing how the tank circuit (primary oscillatory circuit) may be coupled to an antenna by means of a link circuit.

recent paragraphs employs the Hartley circuit. Government regulations require the inductive type of coupling to be employed between the antenna system and the closed oscillatory system of a transmitter. The oscillation transformer consists of the primary and secondary coils, which are mutually related and are mounted as one unit. It is desirable, in some installations, to place the complete antenna sytem with coils out-of-doors. The coils are commonly known as antenna loading inductances. It is then necessary to connect the closed oscillatory circuit to the antenna system with a link circuit or feeder line, that is, the coupling between two circuits is effected either by inductive coupling or capacitative coupling. The two methods are shown in Figs. 335 and 336. Whenever either of these two arrangements is used, the

antenna inductance and the antenna ammeter and ground connections are all in series; therefore no part of the radiating system enters the building housing the transmitter, only the feed wires connecting from transmitter to antenna. This type of coupling is very efficient for short wave transmission because it reduces the length of the lead-in wires from the antenna to the set. It is used advantageously in many high-power broadcasting stations.

The coupling, in this case, is effected through a link circuit indicated E in the diagram, Fig. 335, and the leads connecting the transmitter to the antenna are called "feeder wires."

Inductance L_1 and condenser C_1 comprise the closed oscillatory or tank circuit which regulates the frequency of the high frequency oscillations generated by this system. The blocking condenser C_2 couples the plate to inductance L_1 at point A for feeding back the alternating component of the plate current. Between B and C on inductance L_1 the voltage drop is obtained to excite the grid with an alternating potential to generate the continuous oscillations. The connections are made variable to control the potential applied to the grid.

The frequency of the tuned circuit L_1C_1 is controlled by variable clip D. The inductance E of the link circuit is fixed, and the radio-frequency current is induced into this coil from L_1 of the tuned circuit.

When the antenna loading inductance L_2 is mounted outside of and at some distance from the building, a suitable connection is then made from the link inductance E to L_2, made variable at F, in order that maximum current may flow through the link circuit and produce highest transfer of energy from the closed to the open circuit. The wavelength of the open circuit is varied at G by moving this clip on the antenna inductance L_2.

Another method of coupling is shown in Fig. 336. The antenna coupling to the primary oscillatory or tank circuit L_1C_1 is effected through a single feeder wire W. This wire is connected directly between the two circuits at almost any convenient point along the inductance coil, but not at a ground connection. A radio-frequency choke coil X connected in series with the coupling lead acts to suppress the radiation of harmonics generated in the oscillator tuned circuit. The harmonics are radio-frequency oscillations of a higher order than the fundamental frequency at which the circuit is oscillating. The impedance of the choke coil to these higher frequencies is proportionally greater and acts to prevent the harmonics from being radiated.

This method of coupling is easily adjusted, and the feeder wire W can be carried distances from an antenna system to the transmitting circuits that would be prohibitive in the case of the main antenna leads.

In the circuit illustrated no direct ground connection is used for the antenna system. A large counterpoise is made up of wires radiating from a common center similar to the hub and spokes of a wheel. This constitutes a capacity ground and permits the antenna to oscillate freely about its own electrical center. The plate and grid couplings of the primary oscillating circuit are similar to those already described. It is seen that the feed-back from the plate circuit is through bypass condenser C_2 to coupling lead P, the input alternating voltage impressed between grid and filament necessary to excite the grid for the generation of continuous oscillations being obtained from that portion of the primary inductance L_1 between the grid G and filament F coupling leads.

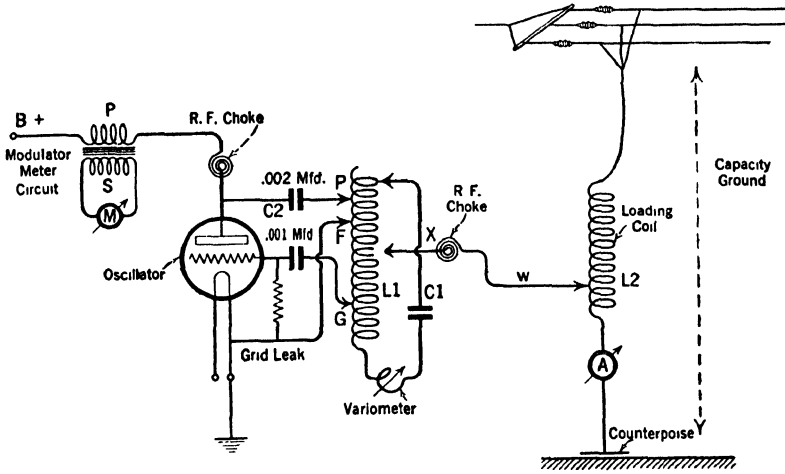

FIG. 336.—The oscillator circuit of a broadcast transmitter showing the tank circuit consisting of L_1C_1 coupled to the antenna by a single feed wire. The radio-frequency choke is used to suppress harmonic radiation.

For the purpose of fine tuning a single turn variometer is connected in series with the primary oscillator circuit. This arrangement enables the adjustment of a frequency under normal conditions to within 100 cycles of the frequency assigned to the transmitter by the government. Fine tuning, by means of a variometer, is to be found in the circuits of many tube transmitters.

A modulator meter is shown connected in the secondary of an iron core transformer. The needle of this meter will indicate by its constant deflection the degree of modulation to the input of the oscillator, and is one of the methods used for checking the efficiency at which the modulator plate current variations are affecting the amplitude heights of the continuous oscillations generated by this system. The modu-

lator choke coil is not illustrated in the diagram, and should not be confused with the coil P of the transformer.

The oscillating frequency of the primary circuit in this transmitter is 1007 kc. The constants of the circuits are a 50-microhenry inductance L_1 and an air-type condenser C_1 of .005 mfd. capacity.

A.C. and D.C. Component of Pulsating Current.—In Fig. 337, the curve at the left illustrates an alternating current and the one at the right a pulsating direct current. When an alternating e.m.f. is superimposed upon a steady e.m.f. (d-c.) a pulsating current will result, provided the strength of the alternating component is not greater than that of the direct current. The resulting current may be better explained by reference to the two curves if we assume arbitrary units of current values rather than values of e.m.f.

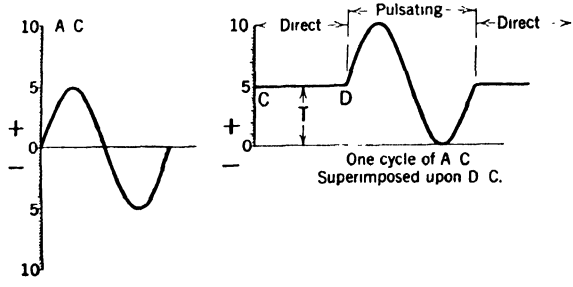

FIG. 337.—Illustrating how a pulsating current is equivalent to the sum of an alternating current and a direct current. Hence we have the expression "the alternating component" of a pulsating current.

Let us suppose that five units of direct current flow steadily in a circuit shown from C to D. At the moment D let an alternating current shown by the curve at the left be impressed upon the circuit. The effect will be to cause an increase in the direct current to 10 units during the positive alternation of the a-c. cycle when both currents are aiding, or flowing in the same direction.

During the negative alternation of the a-c. cycle the five units of a-c. will oppose the five units of direct current resulting in zero current. The direct current continues to flow uniformly at five units when the alternating current does not flow in the circuit. This one cycle of alternating e.m.f. superimposed on the direct current in this case produced one pulse of direct current. This fact is important because throughout the discussions of vacuum tubes we repeatedly refer to the alternating component of the fluctuating plate current. It should be remembered that the plate direct current in a vacuum tube cannot fall below zero, for then it would be an alternating current and not a pulsating d-c. current. If, in a given circuit, an a-c. component is greater than the normal flow of d-c. current then the resultant will be alternating current and not a pulsating direct current.

Vacuum Tube Transmitter Employed for Telegraph and Telephone Transmission.—The purpose of the following discussion is to acquaint the reader with the usual arrangement employed in transmitters, when more than one tube is used as an oscillator or as a modulator. At the same time we will explain in a general way how either telegraph or telephone transmission is accomplished. It also will be explained how the power supplied to the transmitter unit may be obtained from a kenotron rectifier.

In Fig. 338 the transmitter is shown, and in Fig. 339 the kenotron rectifier and filter circuit are illustrated. These two circuits together represent a complete radio continuous wave (c.w.) telegraph and phone transmitter.

Let us return to Fig. 338. For telegraphy, four UX-210 radiotrons are employed as oscillators. For telephony, two of these tubes are utilized as modulators. The tubes are rated at 7.5 watts and require a plate potential of from 350 to 400 volts and a filament potential of 7.5 volts. The approximate plate current of each tube, when oscillating, is 60 milliamperes. (A reference table of electrical constants of the various transmitter tubes is given in the Appendix.) It can be seen from the circuit diagram that the grids of each oscillator are connected together at g, and the plate of each oscillator is connected at junction P_2. This places both oscillator tubes in parallel and each supplies its individual power to the oscillatory circuit. The grid of each modulator tube is connected to the junction at the switch contact SW-2, and each plate of the modulator is connected together at contact SW-1. These connections place both modulator tubes in parallel with each other.

For telegraph transmission all of the four tubes are connected in parallel, and this is accomplished by a three-blade gang switch. The individual contact switch arms are indicated by SW-1, SW-2 and SW-3. When this switch is thrown toward the left, it makes contact for c.w. telegraph transmission. If we trace the circuit from the grids of the two modulator tubes through SW-2 to c.w , then over to point g_1, we will observe that the grid circuits of the four tubes are all connected in parallel at this junction point. This time we shall trace the circuit from the plates of the two modulator tubes through the switch SW-1 to c.w. and over to P_2. We shall now find the plate circuits of the four tubes all connected in parallel at this junction point. All four tubes will now function as oscillators.

The plate circuits are coupled to the inductance L through the plate coupling condenser C_1. When all four tubes are employed as oscillators, then switch SW-3 will be in position on the contact indicated c.w. This means that for the additional power supplied by the four tubes a different coupling for feed-back is required to the inductance L than would

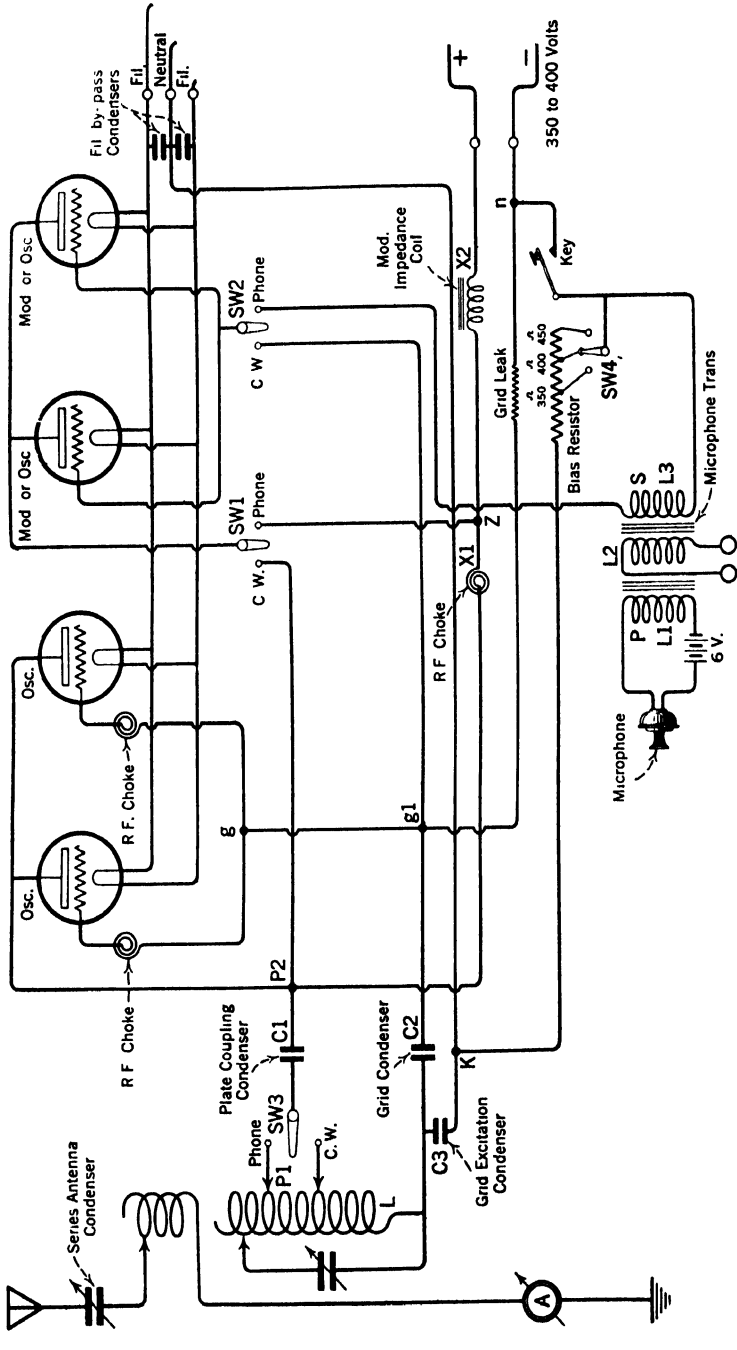

FIG. 338.—How a vacuum tube transmitter may be used for telegraphic signaling or voice transmission by simply throwing a switch. All of the tubes are operated in parallel for telegraphy, whereas for telephony two tubes in parallel are worked as oscillators while the other two tubes also in parallel function as modulators. The phones attached to L_2 enable an operator to listen to the microphone input.

be necessary when only the two oscillators were working together as in phone transmission.

The grid-blocking condenser C_2 in conjunction with the grid leak determines the rate at which the current flows from the grid back to the filament. By using the proper sized grid leak, a definite negative potential can be held on the grid for normal operation.

Condenser C_3 is part of the tuned oscillatory circuit, and provides the voltage drop impressed between grid and filament to produce the radio-frequency oscillations. Condenser C_3 is called either the *grid excitation* or *grid input condenser.*

The filaments are supplied with alternating current. If the power

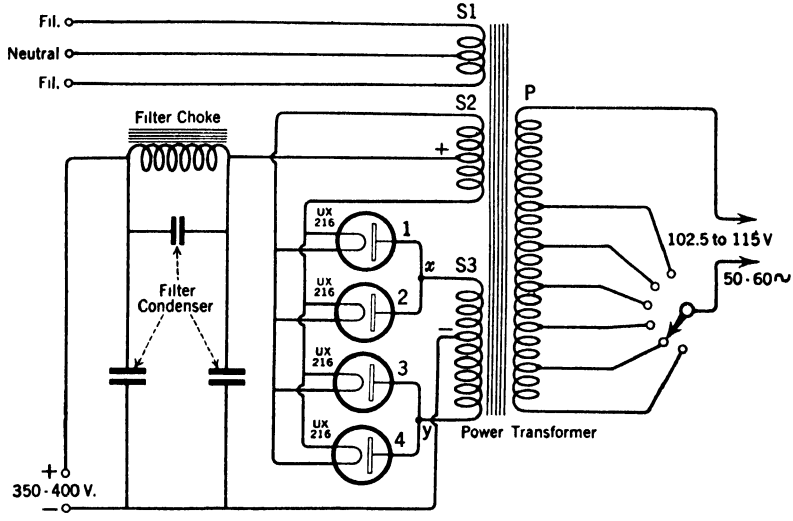

FIG. 339.—How a rectifier circuit may be arranged to provide full-wave rectification by utilizing several half-wave rectifier tubes.

to this circuit was supplied from a motor-generator or rotary converter, then slip rings on the armature of the d-c. motor or rotary converter would furnish the a-c. to the filaments, through a step-down transformer. When the circuit is operated by a rectifier, a separate filament-heating coil is included in the power transformer. The winding which supplies the a-c. is tapped in the middle and connected to the post marked *neutral,* as shown in Fig. 339. Two condensers are connected from the neutral point to each outside terminal of the filament circuit.

The diagram of Fig. 338 clearly shows that the neutral point of the filament circuit is connected to grid excitation condenser C_3 at point K. It can thus be seen when the tubes are oscillating how the voltage across condenser C_3 is impressed between the grid and filament of the tubes.

One more circuit remains to be completed, namely, the connection between negative "B" and the filament circuit. We refer to this specifically because we find this connection completed from K to n with a bias resistor and a transmitting key in series. There is a small switch SW-4 which can be placed at intermediate taps taken from the resistor at 350, 400 and 450 ohms. The bias will be determined by the amount of resistance used.

The action of the bias resistor modulates the continuous high frequency current generated by the four oscillators when used for telegraphic transmission. The audible pitch of the note transmitted depends upon the value of the resistance, and this can be changed by varying the switch SW-4. This switch is sometimes called the "tone switch." The operation of the key closes this bias resistor circuit and provides means for sending telegraph signals. It is thus seen that a commercial tube transmitter of this type, which can radiate a modulated continuous wave, is designed to replace completely a spark transmitter.

There is no necessity to employ a chopper in this circuit to transmit telegraph signals. Also, the signals may be received in any type of receiving set, either a crystal or a non-oscillating vacuum tube detector.

To transmit voice signals the gang switch is thrown to the right and the switch blades make contact at each respective switch stud, marked "Phone."

Let us trace out the connection from the plate circuit of the two modulator tubes through SW-1 to point Z, and also trace the grid microphone transformer. It is seen that the four tubes are no longer connected in parallel. The two modulators and the two oscillators form separate parallel groups.

The switch blade SW-3 is now making contact on the stud marked "Phone," connecting to the tuned inductance L at point P-1. This different connection on the inductance, as previously stated, is necessary because only two oscillator tubes are now supplying lower power through the plate coupling condenser C_1 to the tuned oscillatory circuit.

Voice transmission is accomplished in a manner similar in every respect to the circuit functions previously described. A speech amplifying tube is not usually required when a low-powered tube is employed as a modulator, because sufficiently high voltages can be introduced directly into the grid circuits of the modulator from the secondary of the speech input transformer to give a high percentage of modulation for efficient operation.

In the microphone transformer illustrated there is an additional winding L_2 connected to telephone receivers. This permits the micro-

phone to be placed in some remote room and the operator, sitting near the transmitter, may hear the words spoken into the microphone through the receivers.

The foregoing explanation governing oscillator and modulator tubes connected in parallel arrangement holds good for any number of tubes up to certain practical limits. For instance, a standard tube transmitter for ship installation may employ as many as seven oscillator tubes, and some of the high-powered broadcasting stations are equipped with more than this number.

To complete the power unit of the circuit just described, we will refer to Fig. 339. The circuit arrangement constitutes a *single phase full wave rectifier*. The filter system is composed of the filter choke and the three condensers. Two of the condensers are connected from either side of the choke across the d-c. line from positive to negative. One of the condensers is shunted across the filter choke.

The power from the a-c. line is connected into the primary of the power transformer and provides for 50 to 60 cycles, 102.5 to 115 volts a-c. The alternating current supply is illustrated by the lower wave in the oscillogram in Fig. 256*a*. Full wave rectification is shown by the form in the middle oscillogram, where the current supplied to the filter circuit from the output of the kenotrons is in the form of direct current pulsations.

It is clearly defined that there is a d-c pulsation for every alternation of the a-c. supply. The peaks of the d-c. pulsations would cause a hum in the receiving set tuned to receive signals from this transmitter except for one fact. When the pulsations flow through the filter circuit, the ripples are reduced or smoothed out so that the output of the rectifier conforms more nearly to a constant direct current flow. This is shown in Fig. 256*b*.

The power transformer has three secondary windings. S_1 in Fig. 339 is the filament-heating winding supplying alternating current to the four tubes mounted in the transmitting circuit of Fig. 338. Winding S_2 in Fig. 339 is the filament-heating coil which supplies alternating current to the filaments of the four kenotron rectifier tubes. The third winding S_3 terminates on the plates of these kenotrons.

The tubes employed in Fig. 339 are UX-216 half-wave rectifiers each having one filament and one plate. The tubes are arranged to provide full-wave rectification. Instead of only two tubes being employed to fulfil this function four tubes are utilized, each pair being connected in parallel. The plates of tubes 1 and 2 are connected at junction x, then to the top side of coil S_3. The plates of tubes 3 and 4 are connected to junction y, then to the bottom side of coil S_3. The mid-tap taken

from this coil is the negative side of the d-c. circuit. The filaments of all four tubes are connected in parallel and to the coil S_2 by which they are supplied with alternating current, and the mid-tap of this winding provides the positive potential side of the d-c. circuit.

Briefly, because of the one-way conductivity of a vacuum tube, for all practical purposes, current can flow only from the plate to the filament. Since an alternating e.m.f. is induced in coil S_3, the plates of tubes 1 and 2 will receive a positive alternation when the plates of tubes 3 and 4 at that instant receive a negative potential.

When plates 1 and 2 are positive, current can flow through these two tubes from the mid-tap of S_3 to the filaments and out through the mid-tap of S_2, to the positive side of the d-c. line. During the next alternation induced in S_3, the plates of tubes 3 and 4 become positive and the plates of tubes 1 and 2 then become negative. During this half-cycle tubes 3 and 4 are active and current will flow from the mid-tap of S_3 to the plates of tubes 3 and 4, to the filaments and out through the mid-tap of S_2 again to the positive side of the d-c. circuit. Thus it can be seen that a pulse of direct current will flow in the circuit for every alternation of the induced e.m.f. in the secondary coil S_3. Moreover, this parallel arrangement distributes the load among the tubes because each pair is alternately active.

The a-c. supply to the primary of the transformer is connected to a switch which makes contact to taps on the primary of the transformer. This permits a regulation of the input voltages to the power transformer to cover any change in line voltages from 102.5 to 115 volts.

Vacuum Tubes Connected in Parallel.—When several vacuum tubes are connected in parallel, either operating as oscillators or modulators, there is a certain amount of coupling between the tubes. This intercoupling sometimes has the effect of setting up undesired or parasitic oscillations in circuits. To prevent this, choke coils are connected either in all of the plate circuits of the tubes, or in the grid circuits of the tubes. The system of connecting the choke coils is illustrated in Fig. 340. Each tube circuit in a parallel bank would be identical in every respect as far as the elements in the circuits are concerned, with the exception that each tube would have an individual choke coil.

These choke or reactance coils are of the order of 10 microhenrys when used with a 50-watt tube and do not react or have any choking effect upon the normal oscillating current in the tube circuits. The use of these choke coils is illustrated in the chapter entitled "Tube Transmitters." Resistor units are sometimes inserted in the grid or plate circuits in place of the choke coils to accomplish the same results, dissipating the energy of the parasitic oscillations in the form of heat.

Modulated Oscillator.—The vacuum tube when operated as an oscillator, as shown in Fig. 341, is one of the most flexible devices known, because it can be made to produce oscillations of less than one cycle per second and as high as several hundred million cycles per second. An oscillator thus can be used to transmit audio-frequency signals by modulating the high frequency currents which are generated in the oscillatory circuit. This modulation of energy is obtained from sup-

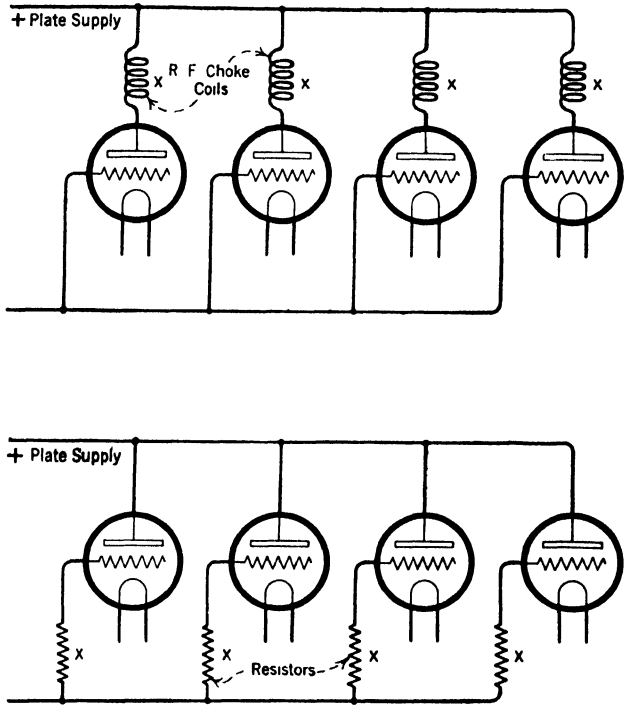

FIG. 340.—Vacuum tubes connected in parallel for transmission require the use of choke coils or resistors in either the plate or grid circuits to suppress ultra high frequency oscillations.

plying the correct grid leak resistance. In general, the theory of modulating by this means rests in the fact that while the tube circuit is oscillating at radio-frequency, the current flowing to the grid can leak off only at a rate determined by the value of the grid resistance. When the grid negative potential of the oscillator is thus changed periodically, the size of the amplitudes of the generated oscillations is varied.

When the amplitudes or heights of "groups" of oscillations are varied by a changing grid potential occurring at a low frequency, a

modulated continuous wave is transmitted. It will be remembered that in the discussion of a modulator tube acting upon an oscillator it was pointed out that any change of plate potential applied to the oscillator at an audio-frequency would cause the oscillator to generate a modulated continuous wave signal. It must be evident that an oscillator can be made to generate a modulated signal either by changes in plate potential or variations in grid potential. The method used when an audio-frequency note is desired for testing or calibration purposes is shown by the circuit diagram, Fig. 341. This oscillator is also very efficient as a driver circuit to furnish a signal for balancing or neutralizing the radio-frequency circuits of any receiving set.

The general construction consists of a coil wound with 50 turns of

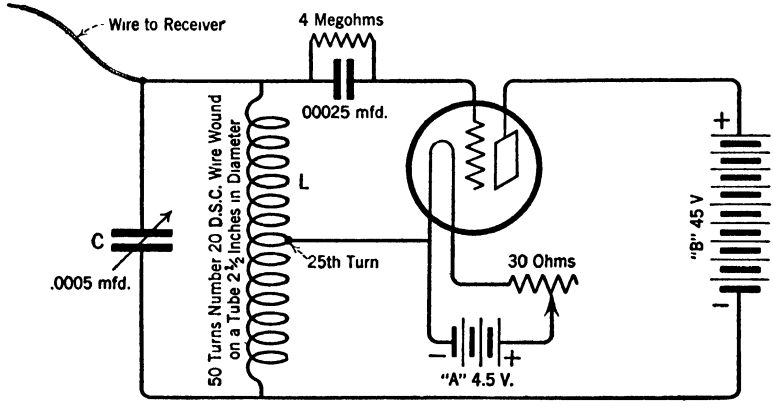

FIG. 341.—A modulated oscillator circuit for calibration and testing purposes. A 199 tube is used and the circuit covers a frequency band from 550 to 1500 kilocycles (200 to 546 meters).

No. 20 D.S.C. wire on a $2\frac{1}{2}$-in. tube. The negative lead of the filament is connected to a tap on the coil at the twenty-fifth turn. A variable condenser, .0005 mfd. capacity, is shunted across the whole winding. This oscillator will cover the broadcast frequency range of 550 to 1500 kc., which equals the wavelength band of 200 to 546 meters.

The grid condenser of .00025 mfd. capacity and grid leak modulate the output high frequency current, the audio note being dependent upon the value of the grid leak. It is recommended that a grid leak of 4 megohms be used. Whenever a higher or lower pitched audio note is desired, it is necessary only to change the grid leak. A low resistance leak will produce a high-pitched note, because the negative charge accumulating in the grid leaks off at a fast rate; therefore the rate at

which the grid voltage changes is periodically increased. On the other hand, a high resistance leak will produce a low-pitched note.

When a UX-199 tube is used, a plate potential supply of 45 volts is sufficient. The dial of the condenser can be calibrated either in wavelengths or in kilocycles from a wavemeter, and this circuit then becomes very useful in calibrating tuned radio-frequency circuits, or adjusting the plates of condensers arranged in tandem in a single-dial control receiver, because the frequency of the oscillations transmitted will be known.

When the inductance coil L is placed near a receiving set, high frequency modulated signals will be induced in the tuned circuits and received in the telephones in a manner exactly similar to a modulated radio-frequency signal received on an aerial from some distant transmitter. This circuit is really a miniature transmitting station, sending out an audible signal. There are times when it is desired to adjust the pitch of the audio-frequency signal. This may be done by changing the value of the grid leak resistance, which, as stated before, determines the pitch of the audio note. The small-sized grid condenser, .00025 mfd. capacity, will permit the high frequency carrier oscillations to charge the grid to a crest voltage, thus maintaining the system in a state of oscillation. While the grid is being charged positive and negative, current flows to the grid and it is the function of the grid resistance to allow the accumulation of electrons on the grid to be released between groups of the high frequency oscillations. The larger the resistance the longer it will take the trapped electrons to leak off. This means that the negative voltage of the grid is reduced for a certain interval of time, and the lower voltage at which the grid is held is only a fraction of the initial negative charge. The rate at which the electrons leak away from the grid is known as the *time constant*, and this factor is controlled by the value of the grid leak. It is obvious that by changing the value of the grid leak the operating voltage of the grid will also change to a different period. If the frequency of grid voltage variation occurs at an audio-frequency rate, the continuous oscillations will be modulated and the envelope of the high frequency carrier currents will be moulded to produce an audible signal in the receiving set.

CHAPTER XXI

COMMERCIAL TUBE TRANSMITTERS

The 2-K.W., ET-3628 A.C.C.W. Tube Transmitter. Popularly Known as the Converted P-8 Tube Transmitter. The spark form of transmission is eliminated in the type P-8 transmitter, and vacuum tube operation is made available by the replacement of the spark radio-frequency units in the closed (primary) circuit with a compact tube rack and coil and condenser assembly. The main power supply equipment is retained. The photographs in Figs. 342, 343*a*, 343*b*, and 343*c* show the converted P-8 equipment.

The conversion of the spark transmitter in brief is made by removing the following parts: the quenched gap panel, airduct, primary condenser rack, coupling shaft and scale, rotary gap disk and muffler, changeover switch and adjusting handle, and all upper contact studs on the wave-changer panel. Also, the primary reactance is permanently cut out and the primary inductance (pancake coil) is removed and replaced with the drum-wound helix type called the "tank indutance," as shown in the photograph.

The tube cradle holding the two UV-204-*A*'s is then installed and protected by a panel screen. The filament bypass condensers are mounted on the rear of the panel in a position directly in back of the filament voltmeter. A large board holding the choke coil and condenser assembly is put in the place formerly occupied by the spark condenser rack. On this board are the grid leak resistor of 4000 ohms and grid radio-frequency choke, the large plate excitation condenser on either side of which are mounted the two smaller plate blocking condensers. The two plate radio-frequency chokes are secured to the bottom of the board toward the rear.

The primary wave-changer panel is drilled for two additional contact studs and five flexible leads are connected, thus providing for a five-wave position holder. The circuit is the conventional Colpitt's oscillator type using flexible inductance leads, making five wavelengths available as indicated in the schematic diagram of Fig. 344.

The open oscillatory circuit of the ET-3628 is substantially the same as the P-8 except for the two additional wavelengths provided and the

secondary inductance has only one variable tap which after calibration remains in a fixed position for all wavelengths. The spark transformer is replaced with a mid-tapped transformer. A filament voltmeter is mounted on the panel, whereas the filament rheostat which controls the alternating current output of the rotary converter is usually placed

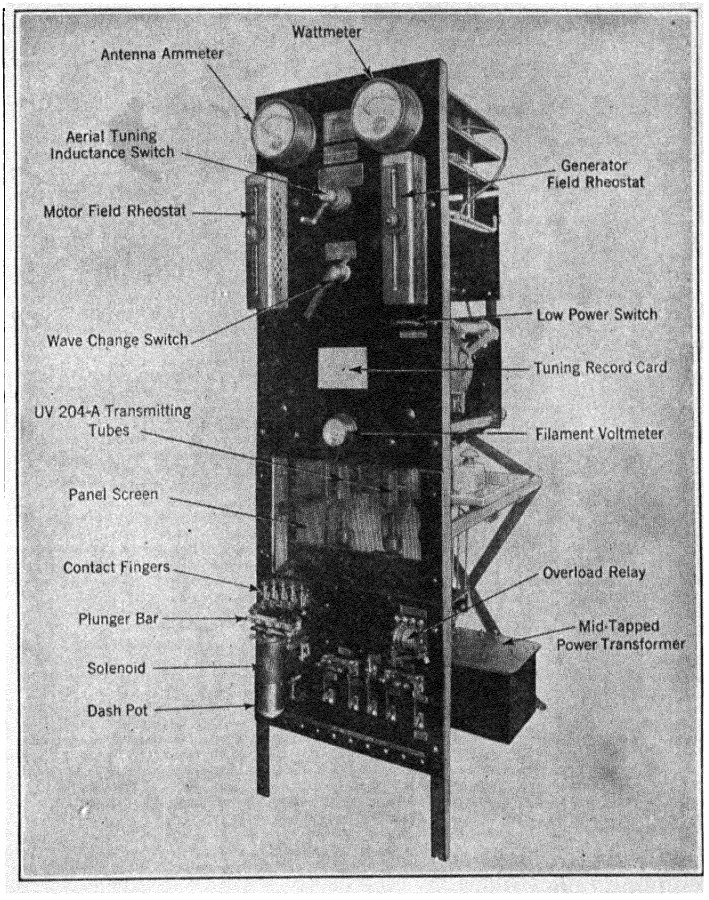

FIG. 342.—Front panel view of P-8 converted tube transmitter, type ET-3628.

near the operator's table. The mid-point of the filament transformer and the mid-point of the plate transformer are joined with a heavy No. 12 gage lead-covered wire which is connected to the ground.

Theory of Operation.—Self-Rectifying Tube Transmitter.—The self-rectifying circuits may be divided into the following two classes:

(1) Those employing one tube and utilizing only one-half of the a-c. cycle.

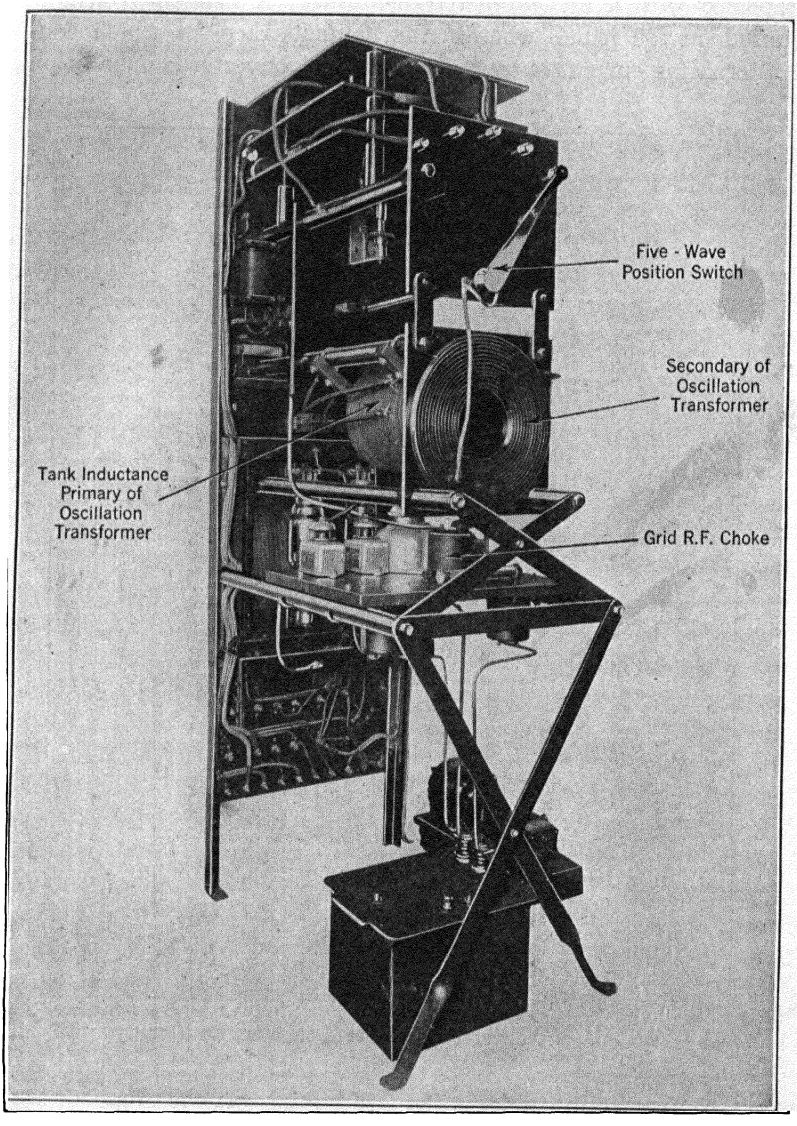

FIG. 343*a*.—Rear view of converted P-8 vacuum tube transmitter model ET-3628.

(2) Those using both halves of the a-c. cycle employing two tubes arranged symmetrically so that each tube operates alternately during the positive alternations of the a-c.

cycle. The latter type is utilized in the ET-3628 described in subsequent paragraphs.

Placing the ET-3628 into Operation.—Before starting the 2-kw.

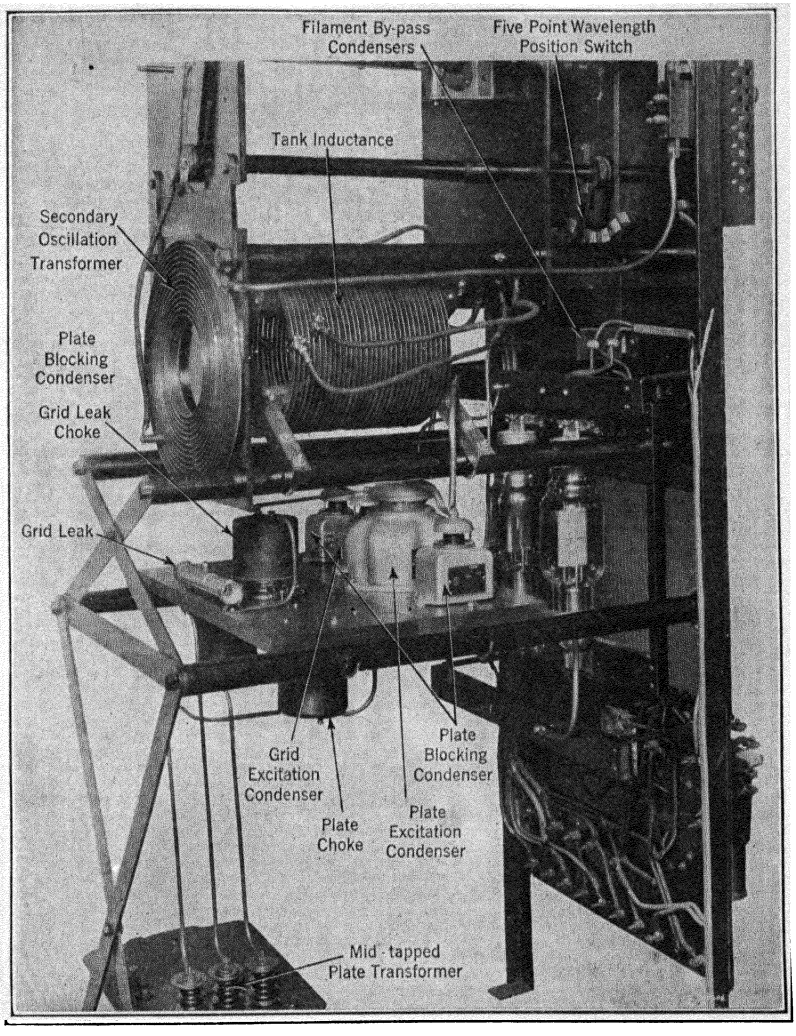

FIG. 343*b*.—A close-up view of the converted P-8 transmitter (type ET-3628) in which the main elements are clearly shown.

motor-generator be sure that the motor and generator field rheostat controls on the panel are at lowest points and also adjust the filament rheostat resistance for minimum voltage. To start the set, close the

main line d-c. switch on the panel; direct current will then flow to the motor field windings. Next press the automatic starter button or throw the antenna changeover switch to the transmitting position. The direct current line is now closed through the starting solenoid,

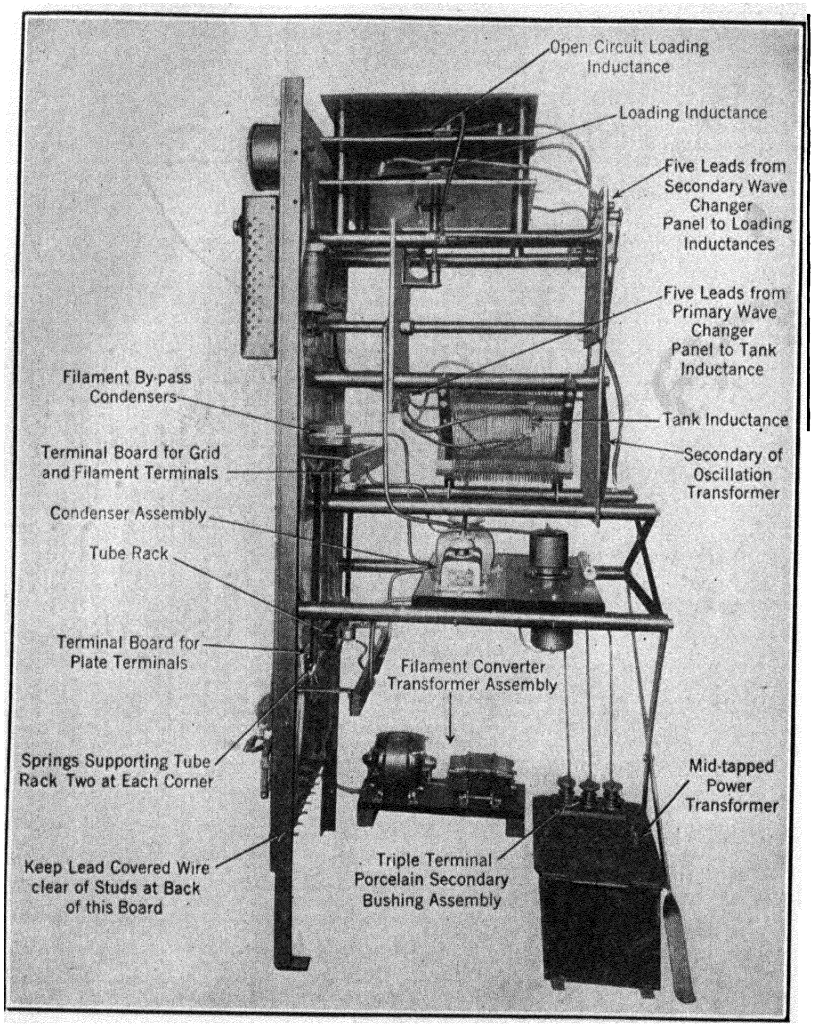

FIG. 343c.—A side view of the ET-3628 tube transmitter.

marked on the photograph in Fig. 342, causing the plunger bar of the automatic starter to rise. The plunger bar moves up slowly, short-circuiting each one of the motor armature starting resistances in succession as it touches the finger contacts. This operation is necessary

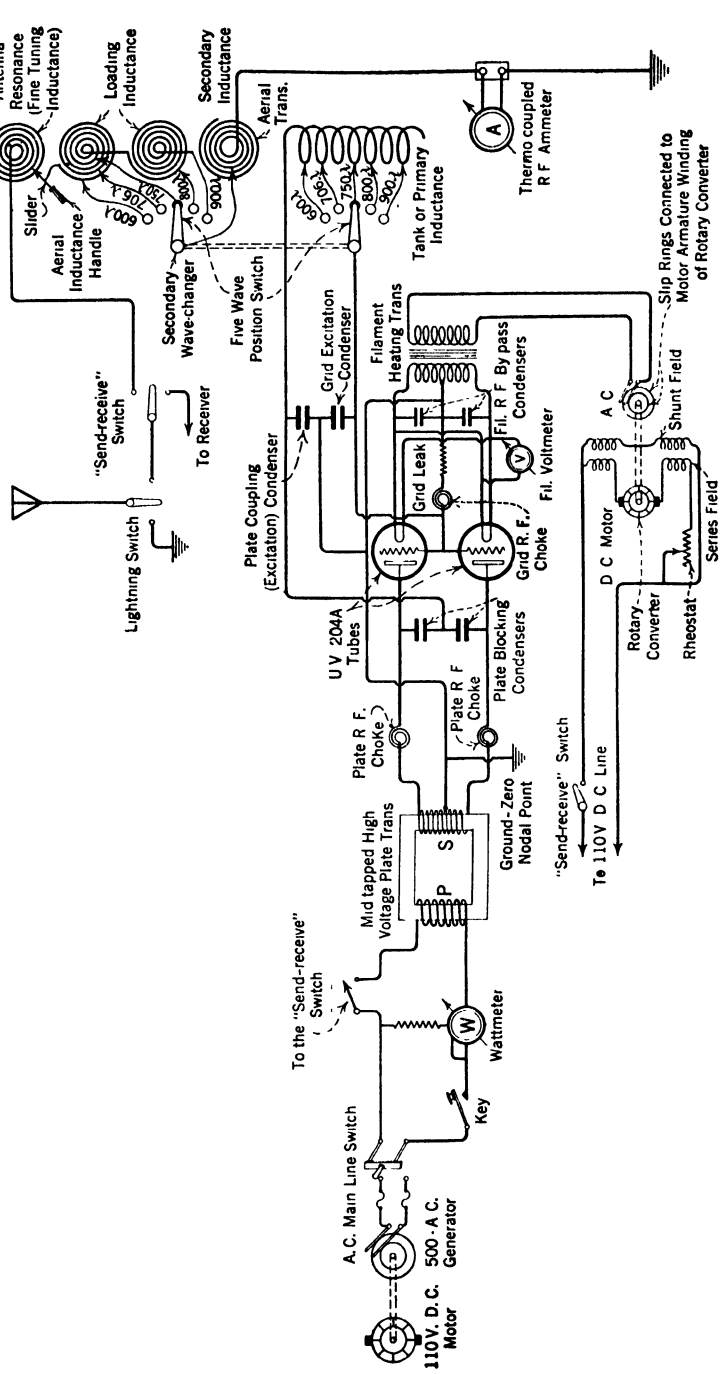

FIG. 344.—Complete schematic diagram of the ET-3628 tube transmitter employing two UV-204A tubes operating "back to back" in a self-rectifying circuit to produce full wave A.C.C.W. transmission. The radiated wave is of the tone-modulated variety. The Colpitts type oscillator circuit consists of the tank inductance, the plate coupling condenser and the grid excitation condenser. The plates of the UV-204A tubes are energized by the 500-cycle high-voltage output of the mid-tapped transformer.

in order to prevent an excessive current flow through the armature when starting. The starting resistances compensate for the lack of sufficient counter e.m.f. until the armature attains full speed. The direct current line to the motor armature coils is closed, however, only when the bar touches the first finger and at this moment the armature will begin rotation. From this point on, the armature continues increasing in speed until the bar reaches its uppermost position, after which the speed remains constant. The motor speed may be changed by moving the slider of the field rheostat up or down, as the case may be. When the bar makes contact with the last finger on the right, current flows to the generator field through the low power resistor (shunted by a S.P.D.T.) switch and the field rheostat. The latter devices regulate the a-c. output of the generator. The rotary converter used for filament excitation is set into operation when the antenna changeover switch ("Send-Receive" switch) is placed in transmitting position. Adjust the filament rheostat until the filament voltmeter reads 11 volts. Now close the a-c. main line switch and place the wave-changer switch on the desired wave. This should be followed by depressing the transmitting key and at the same time turn the aerial inductance handle which controls the sliding contact, until a maximum deflection is recorded on the radiation ammeter scale. This method for fine tuning permits the best conditions of resonance between the closed and open oscillation circuits to be obtained. It is advisable to repeat this adjustment when operating on any of the five wavelengths. Do not change the wavelengths while the key is depressed. When the maximum antenna current is obtained and with the wave-changer on the desired wave, the key may be operated for the transmission of messages. The set is closed down by pressing the push-button "Start-Stop" switch.

As previously mentioned, the power is regulated by the generator field rheostat and in no case should the wattmeter be permitted to read higher than $1\frac{1}{2}$ kw. The single pole switch shunted across the low power resistor should be open when communication is established with nearby coastal stations in order to minimize interference.

The main line d-c. switch should be open when the set is not in operation because the motor fields are permanently connected across the line when this switch is closed. With the d-c. switch closed, current feeds to these coils continuously regardless of whether the motor-generator set is running or idle. It is understood that the generator field switch on the panel must be closed before operating the set.

FUNCTION OF PARTS

The antenna radio-frequency ammeter indicates maximum deflection when antenna circuit resonance is established with the tank oscillatory circuit.

The loading inductances permit the antenna to be resonated with the closed circuit at the five wavelengths available.

The aerial tuning inductance is a continuously variable inductance having a sliding clip, which can be moved by rotating the topmost handle on the front of the panel. The inductance can be increased or decreased inch by inch, permitting a critical resonant adjustment to be obtained on all waves.

The primary inductance, called tank inductance or plate coil, is used for obtaining the correct amount of inductance for a certain capacitance in the excitation condensers, to promote the generation of continuous oscillations. Also, the tank inductance, being mutually related to the secondary inductance, functions to transfer part of its energy by electromagnetic induction to the open antenna circuit, thus setting the latter into excitation.

A plate excitation condenser of 0.002 mfd. capacity is connected in series with the grid excitation condenser and tank inductance forming the closed oscillatory circuit. The plate condenser couples the output circuit or plate to the input or grid.

The grid excitation condenser of 0.014 mfd. capacity supplies the grids of the oscillator tubes with a radio-frequency alternating voltage obtained from the radio oscillations flowing in the tank circuit. This is known as the feedback voltage. It is seen from the diagram, Fig. 344, that the voltage drop impressed between grid and filament of the tubes is obtained through the two leads connected across only a portion of the total primary capacitance, that is, the portion represented by the grid excitation condenser. This is a conventional Colpitts oscillator circuit. The total capacity of the tank circuit is represented by both the grid and plate excitation condensers in series. Tuning this circuit to any required frequency is accomplished by varying the flexible leads on the primary inductance for any of the wavelength positions as designated.

The plate blocking condensers, of 0.001 mfd. capacity each, prevent the plate d-c. voltage supplied by the plate transformer from being applied directly to the grids of the tubes. These condensers not only are intended to isolate the d-c. circuit from the oscillating a-c. circuit, but they must offer a low reactance to the high frequency component of the plate current and thereby serve as a bypass path for this oscillating energy from the plates to the tank circuit. The plate supply system or power transformer secondary would be short-circuited if these condensers broke down. The direct current component of the plate current flows through the plate radio-frequency chokes and the transformer secondary.

The plate radio-frequency choke coils keep the high frequency current from backing into the power-transformer circuit which would result in severe losses of energy. In this way the maximum flow of radio energy is maintained in the tank circuit.

It will be noticed that the radio-frequency chokes are not single-layer wound coils, but have a special form of winding. This construction was found necessary in order to prevent trouble due to burned-out chokes. The burning currents were frequencies of some even multiple of the fundamental or operating frequency of the transmitter. Because of the special winding the chokes possess a greater amount of inductance and less distributed capacitance than the ordinary single-layer wound coil. Damage to these special chokes could only be done by frequencies other than those that might possibly be generated in the circuits in which they are contained.

A filament heating transformer steps down the a-c. voltage to about 13 volts, no load. The filament rheostat permits the adjustment of the filament voltage.

A filament rotary converter a-c. receives d-c. power from the 110-volt d-c. line and delivers alternating current at 60 cycles to the primary of the filament transformer.

The grid leak resistance of 4000 ohms, connected in common to grids of both oscillators, maintains the correct negative bias for stable operation.

A grid radio-frequency choke prevents losses through the grid leak circuit of the high frequencies which flow from the grid excitation condenser. The largest amount of this energy fed back from the plate circuit is necessary for building up a maximum alternating voltage on the grids to promote the generation of continuous oscillations. Also, the grid choke will suppress ultra high frequency or parasitic oscillations from being generated. The frequency of such oscillations, if allowed to occur, is governed mainly by the plate to grid capacity of the two tubes in series and the inductance of the connecting leads.

The filament bypass condensers allow the radio-frequencies to flow readily between the filament and tank circuit. Without these condensers the only other path provided would be through the windings of the filament-heating secondary. These windings naturally would offer a high inductive reactance due to their turns and the presence of the iron core.

The plate power transformer is of the closed core type, and receives a low voltage 500-cycle current in the primary and delivers a high voltage 500-cycle current from its secondary, the opposite ends of which are connected to the plates of the oscillator tubes. Each tube alternately receives a positive and a negative voltage during successive cycles. Only the tube receiving a positive voltage at any particular time is active, permitting the flow of plate current. The plate voltage continually changes in strength at the low frequency (500 cycles) causing the generated continuous oscillations to vary their amplitude in like manner. This is called tone or modulated (A.C.C.W.) continuous wave, and also

classified as I.C.W. The primary circuit of the plate power transformer includes the transmitting key, wattmeter, and a-c. generator.

The hand transmitting key closes the generator a-c. circuit and energizes the plate transformer which in turn supplies the plate potentials necessary to set the vacuum tube circuit into oscillation.

The circuits of the motor-generator, automatic starter, and type I antenna transfer switch are similar to those described in other sections of this text.

A five position wave-changer switch changes the wavelength of the closed oscillatory circuit or tank circuit simultaneously with the open radiative circuit; both contact arms are connected mechanically as indicated by the dotted line in the schematic diagram, Fig. 344.

Tuning—Split-Tuning Indications.—Whenever calibration of the converted P-8 is performed the power should be adjusted to about ½ kw. and the tubes constantly observed during the process for heating and sparking. A rough tuning adjustment is first taken by placing the wave-changer switch on the lowest wavelength position and using a wavemeter held near the tank inductance to measure the wavelength. The wavemeter condenser should be moved very slowly in order not to pass the exact point of resonance. The tank inductance is provided with only one clip, which should be varied until the desired wavelength is obtained. This procedure is to be followed by resonating the antenna circuit to the primary, or tank circuit. The adjustment is to be considered satisfactory when a maximum reading is obtained on the antenna ammeter. When tuning the antenna circuit care must be taken not to include too many turns on the secondary coil. It will be found that about two turns gives a sufficient amount of inductance for the proper transfer of power, and will not result in too close coupling between the primary and secondary circuits, a condition that usually produces an effect called " split tuning." It is essential that a transmitter be cleared of such an undesirable condition, providing it exists, because the frequency of the emitted signal will " swing " sharply from one frequency to another. The operator at the distant receiving station could only intercept the signals upon the frequency to which his receiver circuit is tuned and the other frequency when the signal swings could not be heard.

In order to detect the presence of split tuning the following two tests should be employed.

First, the transmitter is in correct adjustment (i.e., only one frequency or wave is being radiated) when the antenna ammeter reading increases steadily while the open circuit is brought to resonance by turning the handle on the front of the panel marked " Aerial Tuning Inductance," and if after the resonance point is passed the ammeter

reading is again seen to decrease steadily. On the other hand, it may be accepted that two frequencies or waves are being radiated (i.e., split tuning) if the ammeter reading drops suddenly after the critical point or highest reading is passed. It can be assumed also that the split tuning effect is due to tight coupling and this trouble may be corrected by changing the coupling. This is accomplished by altering the amount of secondary inductance used by very carefully going over the ribbon wire inch by inch with the clip until a suitable point is found, but not by varying the distance between the two coils, as they are in fixed mechanical relation to each other. The person performing the calibration must not touch any wiring or clips when the transmitting circuit is active. It is advisable to open the switch marked " Generator Field " when making adjustments.

Second, another test for determining split tuning is to mark the resonant point on the aerial inductance scale while the handle is turned in one direction, and after passing the resonant point by two or three turns of the handle, reverse the direction and return to resonance and again mark the scale. If the two marks do not coincide the coupling should be reduced until they do.

After the calibration is completed on low power, the power can then be increased to normal and an antenna current of about 10 amperes is usually obtainable. In order to provide adequate protection to the transmitter apparatus the clearance between the safety gaps on the plate transformer secondary are to be set at about $\frac{1}{16}$ inch.

Practical Suggestions.—The connections in the transmitter and power units should be gone over occasionally, and at such times the antenna and ground system should also be inspected. While ordinary faults in an antenna system used with a spark transmitter do not lower the efficiency to any appreciable extent they do become troublesome with a tube transmitter. In order to maintain the resistance of the antenna at a minimum the ground lead should make a clean metal connection with the hull of the ship. Two or three ground leads are generally required and these may be easily traced to their actual locations, whether they are made on the hull, bulkhead, conduit pipe or heating system piping.

The hard-rubber strops and rods which insulate the antenna are generally replaced with porcelain insulators whenever a tube transmitter is installed. The porcelain insulators inserted in each end of the one or two wires forming the horizontal elevated portion of the antenna, those in each halyard, and the porcelain deck insulator (if one is used in place of the regular electrose deck insulator) should all be carefully

examined for cracks or chips in their surfaces which would allow the insulators to absorb moisture.

In the transmitter proper all of the three radio-frequency chokes have similar characteristics and are interchangeable. If trouble develops in either plate choke coil remove the choke in the grid leak circuit

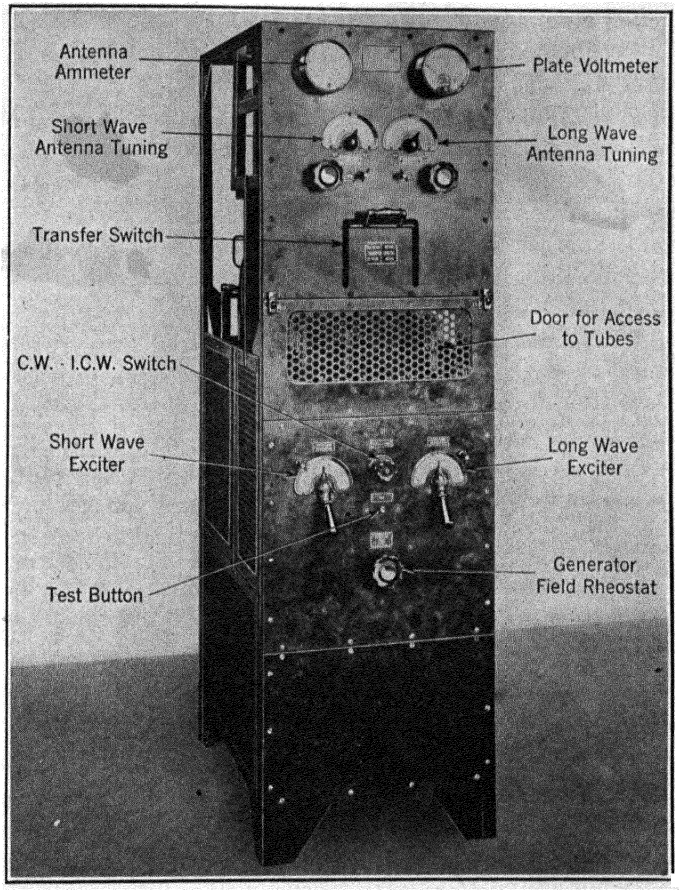

FIG. 345.—Front panel view of 500–750-watt tube transmitter, model ET-3626.

and install it in place of the defective plate choke. The grid leak choke terminals may be jumped, as this choke can be dispensed with for emergency operation. Emergency choke coils may be made of two 400-turn honeycomb coils in series, or their equivalent.

ET-3626 Commerical Transmitter—500-750 Watts.—The front view of this transmitter is shown in Fig. 345. Other views of the complete transmitter and important sections are shown in Figs. 346, 346*a*, 347,

348 and 349. The motor-generator and operator's control panel are illustrated in Fig. 350, and the schematic diagram in Fig. 351. Transmission on two wavelength bands is provided through the use of a transfer switch and two independent sets of tuning elements. These bands are 600 to 1250 meters and 1250 to 2500 meters. Interrupted

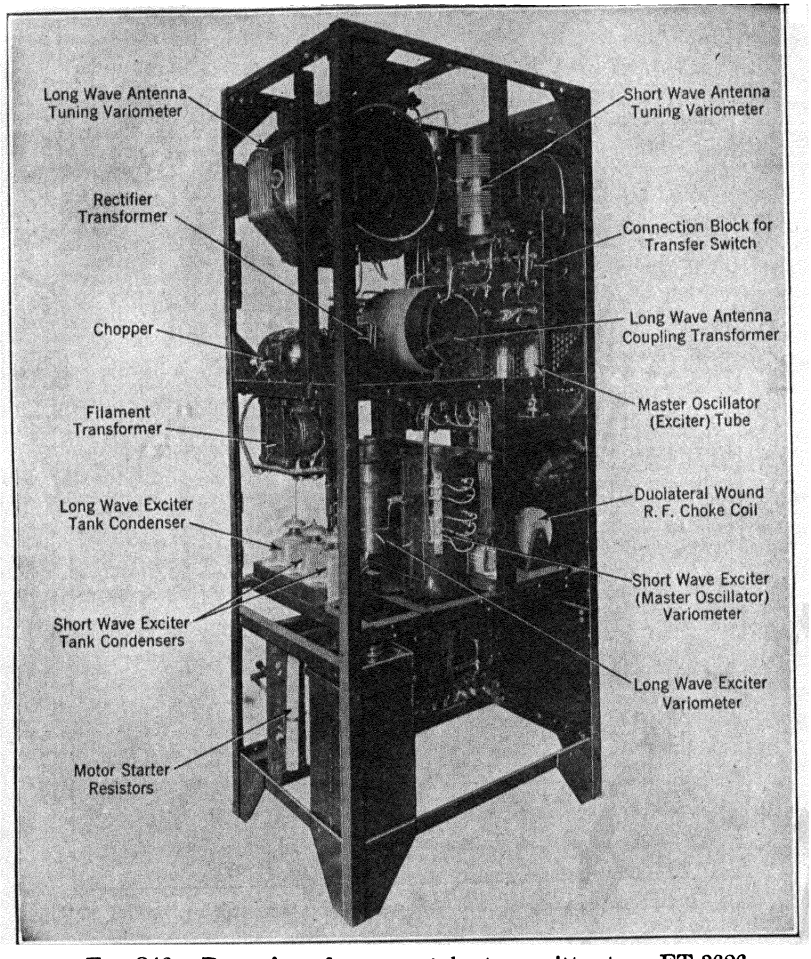

FIG. 346.—Rear view of vacuum tube transmitter type ET-3626.

continuous wave transmission is obtained by a chopper system which causes the radiated signal to produce in the receiving set the characteristic tone of a 500-cycle spark transmitter.

Eight UV-211 50-watt tubes are utilized in this equipment. Six tubes connected in parallel are used as power amplifiers which feed their

output into the antenna system through a coupling transformer. One tube is employed as the master oscillator or exciter. Facing the panel the master oscillator is the left-hand front tube; it utilizes the split inductance, or Hartley method of feed-back, to produce oscillations.

Another tube located directly back of the master oscillator, that is, in the left-hand rear corner of the tube rack, is used as a rectifier. This

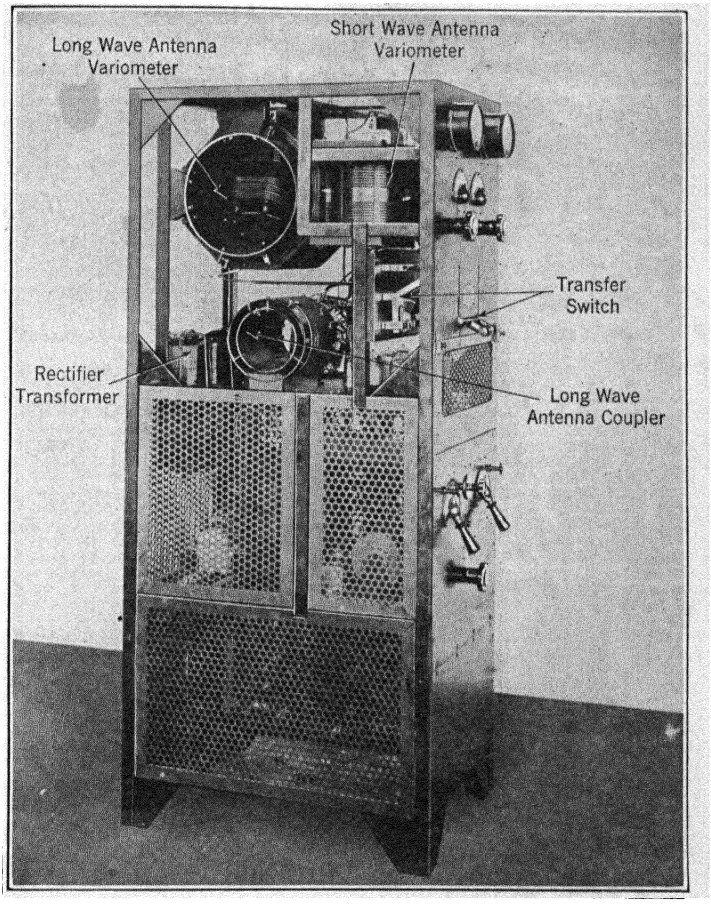

FIG. 346*a*.—Left side view of the ET-3626 tube transmitter.

tube charges a 1.0-mfd. condenser to a potential approximately 250 volts. Power for this circuit is taken from the 77-volt, 30-cycle filament supply and passes through a small transformer which steps up the voltage to 250 volts and the tube rectifies this voltage for introduction into the keying circuit. While the sending key is up, a negative potential of 250 volts is applied to the grid circuits of the master oscillator

and the power amplifiers to stop oscillation and insure continued blocking of the plate current. This grid bias voltage is automatically controlled by the manipulation of the hand key which in turn actuates a relay with two pairs of contacts. The relay contacts are arranged in such a manner as first to open the grid circuit stopping oscillation and

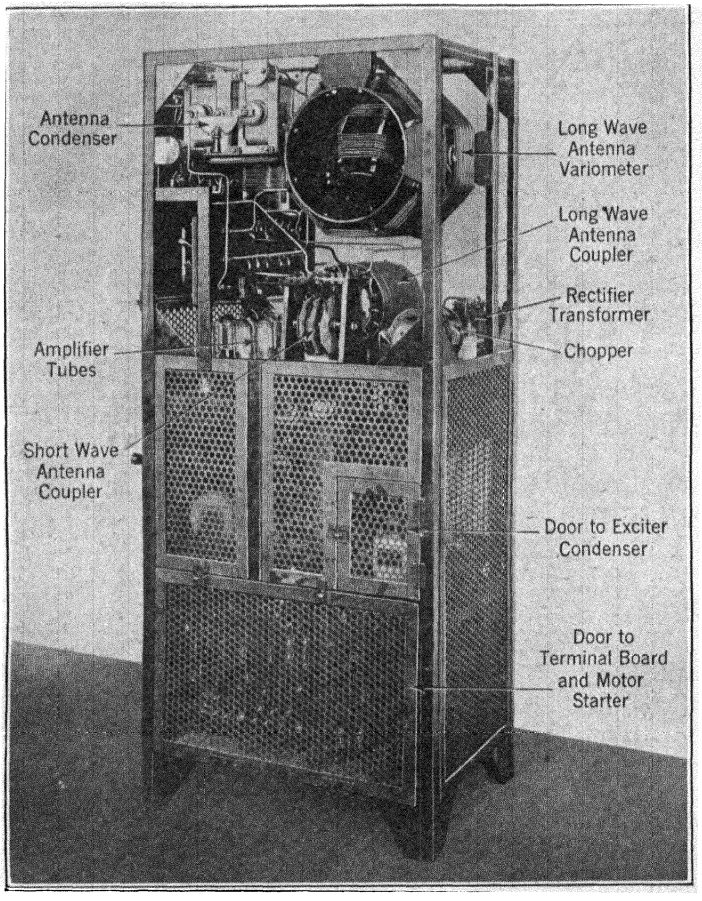

FIG. 347.—Right side view of ET-3626 tube transmitter.

immediately after to permit the negative 250-volt bias to be applied while the key is up, as previously mentioned. A second relay device shown in Fig. 348 provides break-in operation by connecting the receiving set to the antenna when the key is up.

The motor armature of the motor-generator is provided with two slip rings from which the a-c. power is obtained for filament heating.

The filament transformer receives the 77-volt, 30-cycle, single-phase power through a rheostat and steps down this voltage to the value required by the filaments, or 10 volts. The power for plate excitation is delivered by a two-pole compound-wound generator giving a d-c. potential of 1000 to 1200 volts.

The fundamental oscillator, power amplifier and tuning circuits in this transmitter are quite similar to those in the ET-3626-A and ET-3626-B equipments. The theory of operation and other information relating to the main circuits of the three models may be fully understood

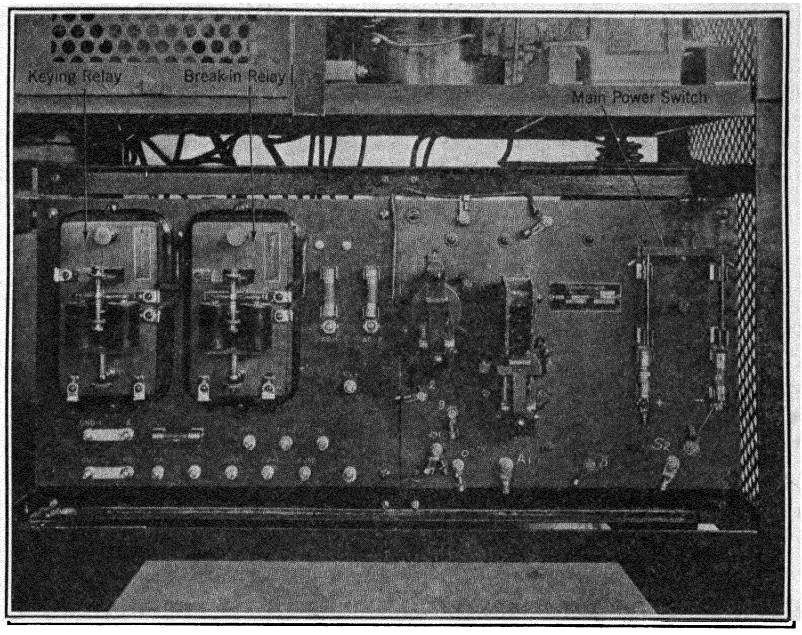

FIG. 348.- Showing keying relay, break-in relay, fuses, terminal board, motor starter, and main line power switch of the ET-3626 tube transmitter.

by making reference to the discussions on transmitter ET-3626-B given in subsequent paragraphs. The principal change that has been made is in the method employed for obtaining the 250-volt grid negative bias. In the ET-3626-B it is obtained from the voltage divider or potentiometer connected across the positive and negative 1000 volts of the generator, whereas, in the ET-3626 this potential bias is furnished by one tube which functions as a rectifier, as explained in a foregoing paragraph.

The fundamental operation of the transmitter is briefly as follows: When sending key 21 (Fig. 351) is up, contacts 18 and 19 on the key relay

are closed, at which time the 250-volt negative bias furnished by the rectifier tube 22 is applied to the grids of the oscillators and power

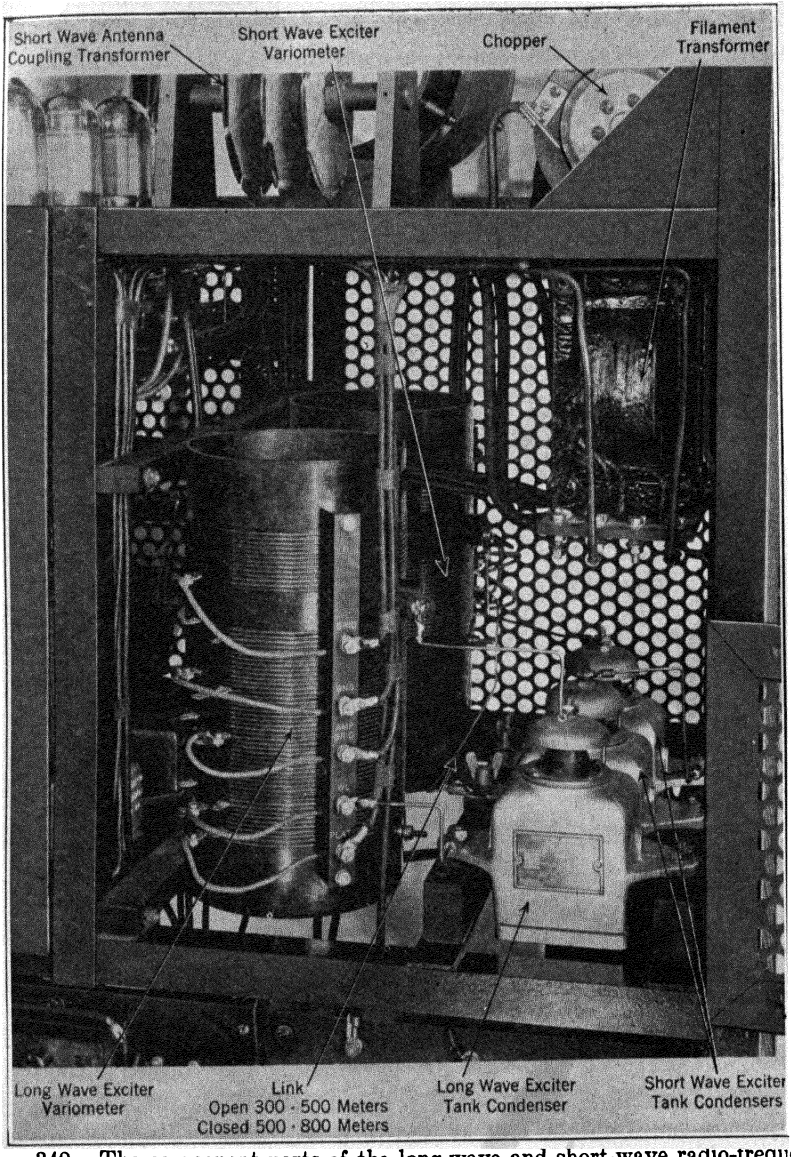

FIG. 349.—The component parts of the long-wave and short-wave radio-frequency circuits of the ET-3626 tube transmitter.

amplifiers. This bias blocks the plate current of all tubes and oscillations cease. When the key is depressed contacts 18 and 19 open,

thus removing the bias, and oscillations are again set up in the transmitter circuits.

Since this transmitter does not contain an audio oscillator circuit it requires the use of a chopper system in order to provide I.C.W. transmission. Observe how the chopper commutator 15 is shunted across a section of inductance marked 8 in Fig. 351 between locations *N* and

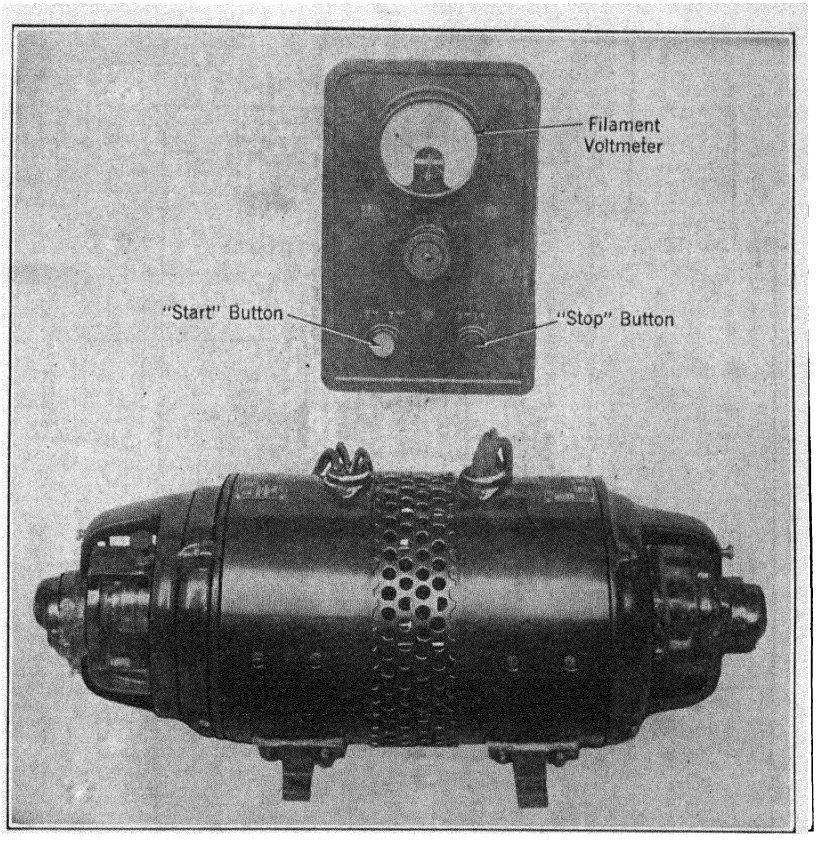

FIG. 350.—Motor-generater set and operater's control box unit of the ET-3626 tube transmitter.

Gnd when the switch 16 is placed in the I.C.W. position, thereby closing the chopper circuit. When in operation the chopper short-circuits this section of the inductance at approximately 500 cycles per second. In commercial service signals of this type are called I.C.W. The chopper is placed in operation by the "C.W.-I.C.W." switch on the front of the panel. It should be noted that the antenna current will be somewhat less than when straight C.W. is used.

ET-3626-A.—500-750-Watt Transmitter.—This transmitter uses a total of eight tubes of the UV-211 type. Six of these tubes are connected in parallel and operate as power amplifiers, whereas the remaining two, also connected in parallel, are the master oscillators. The front and rear tubes at the extreme left of the tube rack are the oscillators. An

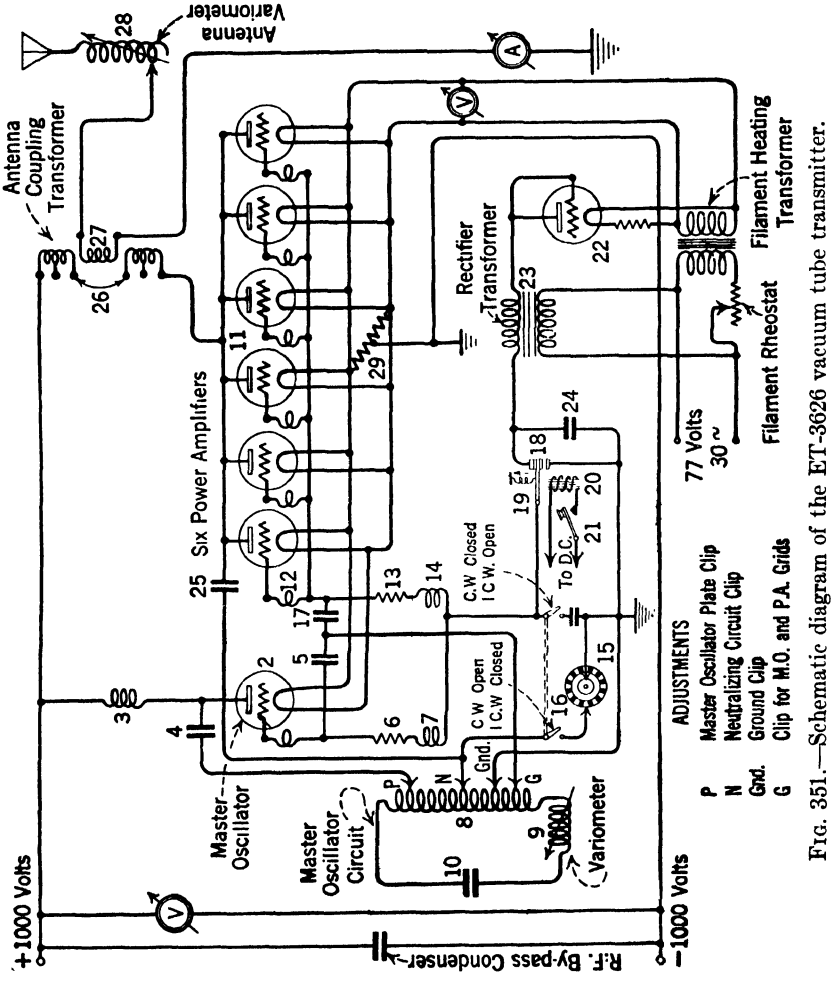

Fig. 351.—Schematic diagram of the ET-3626 vacuum tube transmitter.

audio oscillator circuit is not included in the set and hence a motor-driven chopper is used to give I.C.W. transmission. The schematic diagram of the ET-3626-A is shown in Fig. 352. Keying is uniwave and the negative 250-volt keying bias is supplied from the potentiometer marked 18 in the diagram. An inspection of the circuit arrangement

shows that the oscillator, power amplifier and antenna circuits are similar to those in models ET-3626 and ET-3626-B, the theory of which is explained in the paragraphs immediately following.

ET-3626-B—500-750-Watt Transmitter– C.W. and I.C.W. Telegraph Service.—This transmitter utilizes eight vacuum tubes, all of which are of the UV-211, 50-watt type. One vacuum tube functions as the master oscillator, one as an audio oscillator to provide for I.C.W. transmission, and the other six as radio power amplifiers. When used on the

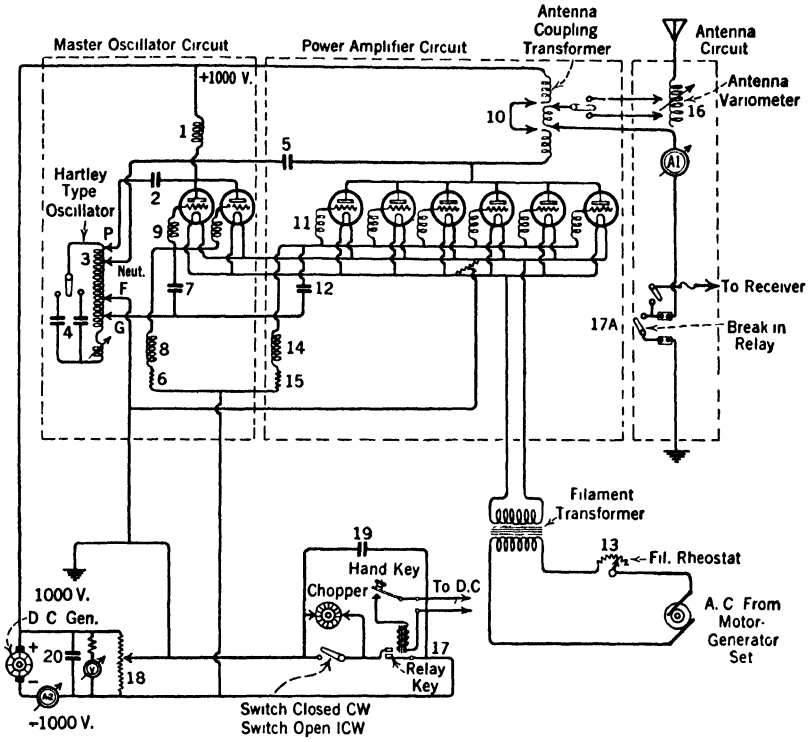

FIG. 352.—Schematic diagram of the 500 750 watt tube transmitter, type ET-3626-A.

average ship antenna the transmitter covers a continuous range from 600 to 2500 meters or 500 to 120 kilocycles. C.w. and I.C.W. telegraphy are obtained by turning the signal switch on the panel to the proper position. The front panel view is shown in Fig. 353 with all controls and meters identified. A side view of the transmitter is shown in Fig. 354. A schematic circuit diagram of the fundamental arrangement is shown in Fig. 355 while the wiring diagram is given in Fig. 356. The latter diagram shows that two entirely separate sets of master

oscillator (exciter) circuit elements and antenna tuning elements are provided, one for the 600 to 1250-meter range and the other for the 1250 to 2500-meter range. Either the long or short wave range may be selected by the seven-pole double-throw switch marked "Transfer Switch." The tubes are connected to the long wave circuits when this

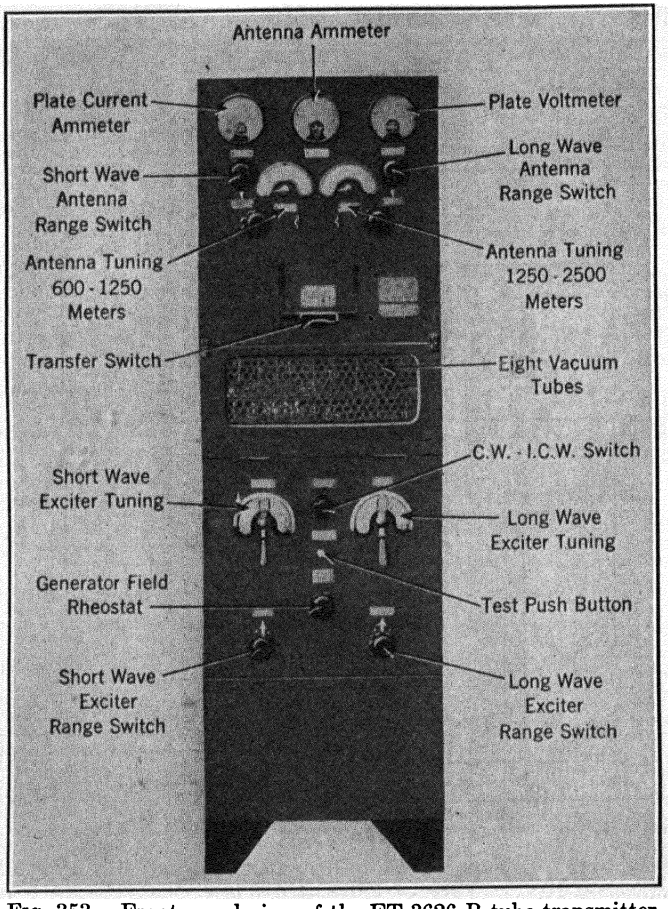

FIG. 353.—Front panel view of the ET-3626-B tube transmitter.

switch is thrown up, and to the short wave circuits when it is thrown to the down position.

The two pointers with long handles, shown just below the hinged screen door about midway of the panel in Fig. 353, control the master oscillator (exciter) circuits by means of which the desired transmitting frequency is obtained. Loading of the antenna circuit is accomplished with a tapped inductor equipped with a rotor coil to permit fine tuning

adjustment by the variometer method. The knobs controlling the antenna tuning are located on the upper part of the front panel. The short wave exciter circuit is placed on the left and the long wave on the right. By again making reference to the schematic diagram it is seen that the exciter oscillatory circuit or frequency-determining circuit consists of the inductor labeled 3 and the condensers 4. The inductor is

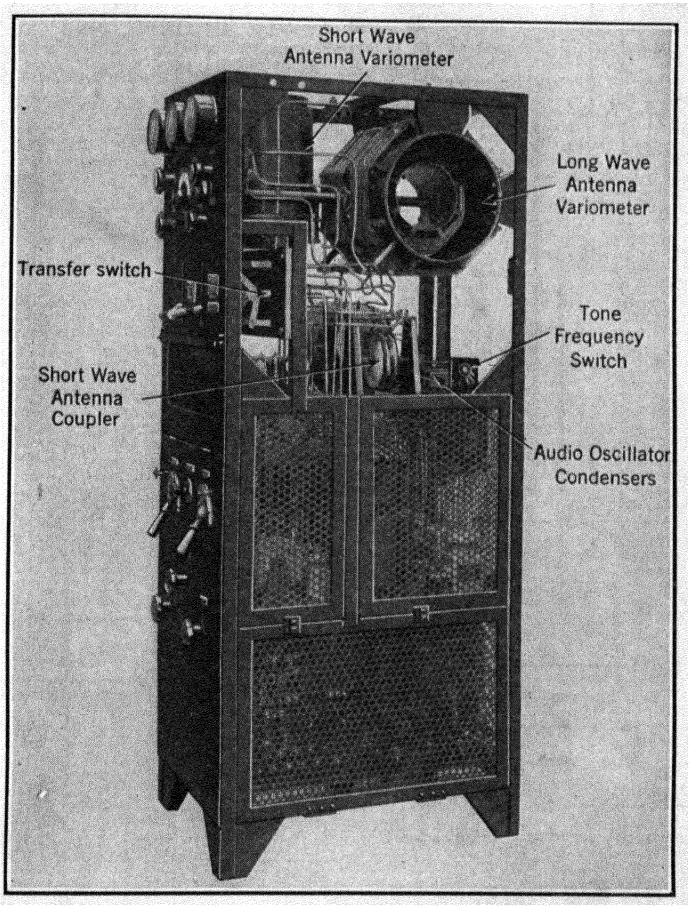

FIG. 354.—Right side view of the model ET-3626-B tube transmitter.

also provided with a rotor coil which permits the variometer principle to be employed for changing the frequency. The plate and grid of the oscillator tube are connected to the tuned circuit by leads *P* and *G* through bypass condensers 2 and 7 respectively. The filament is attached to the oscillator circuit through lead *F*. As previously stated, in the actual transmitter two of these inductors are supplied with the

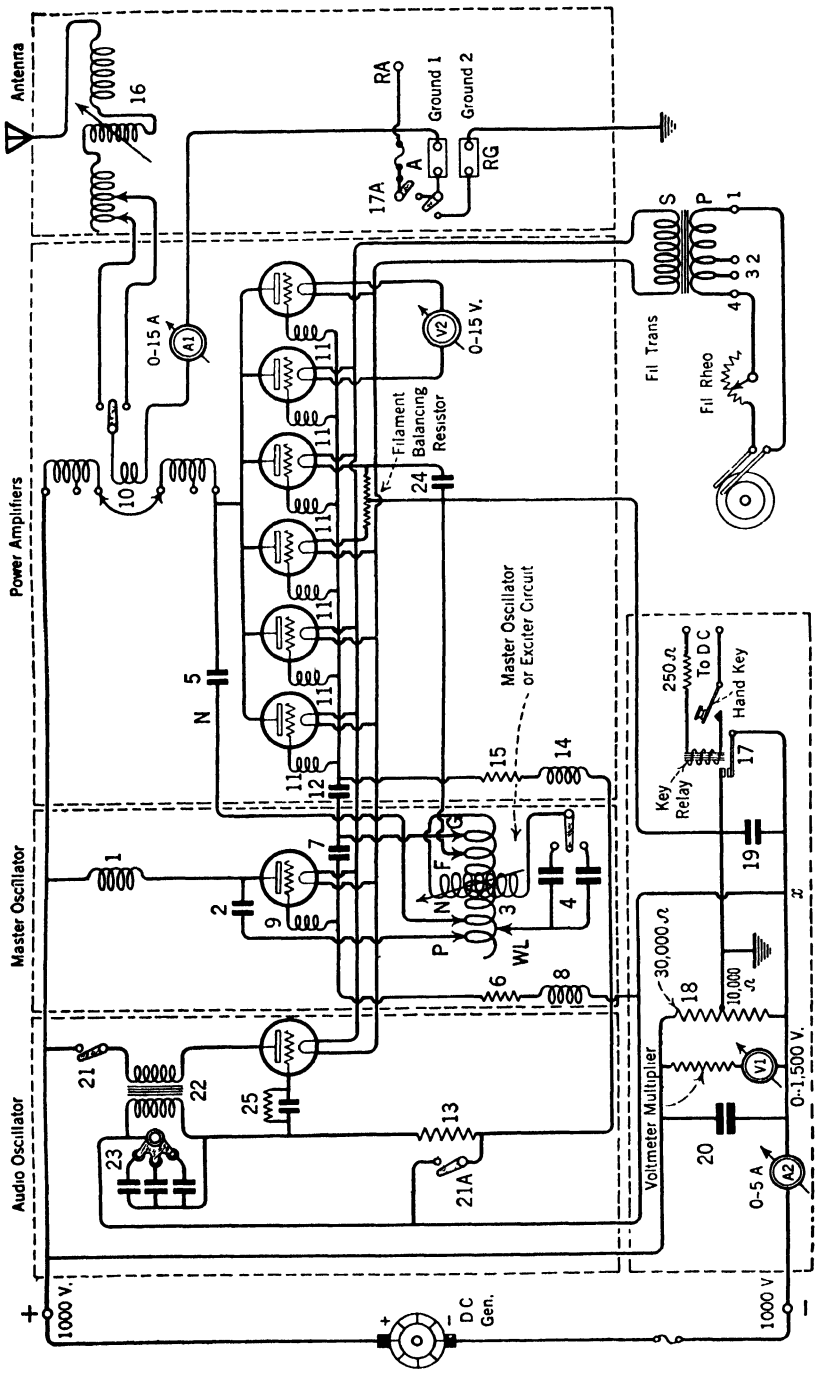

FIG. 355.—Schematic circuit diagram of the ET-3626-B tube transmitter.

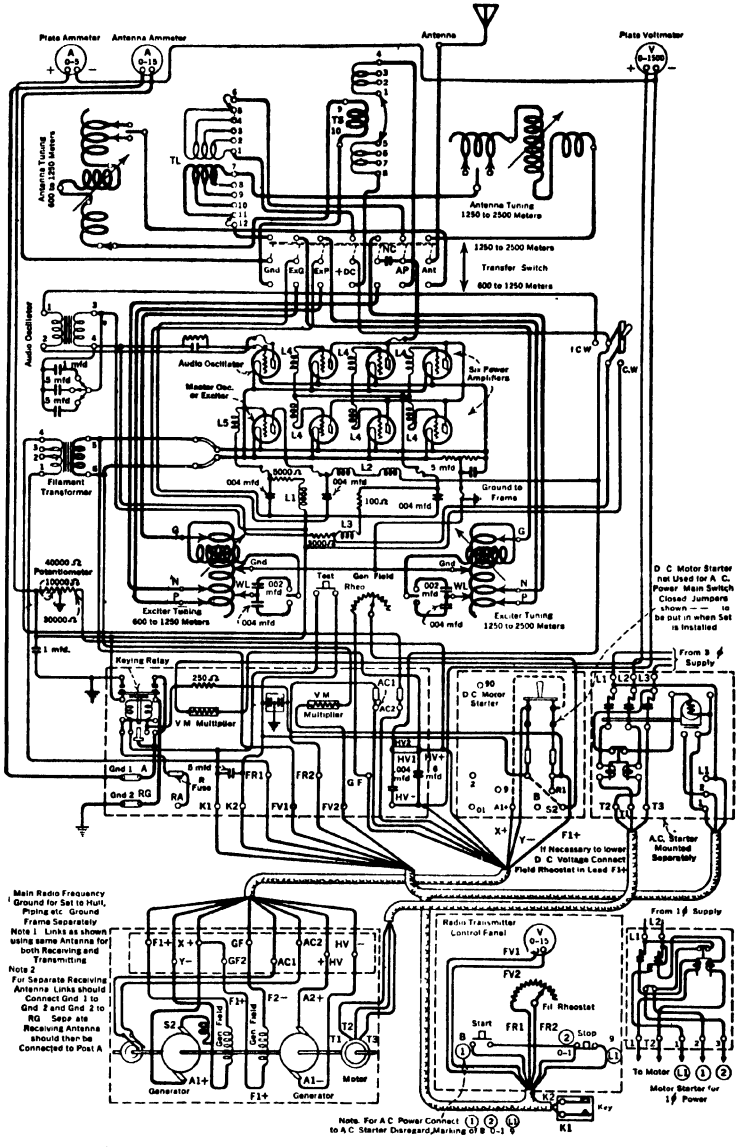

FIG. 356.—Diagram of connections of vacuum tube transmitter, model ET-3626-B alternating current supply.

P	Plate.
G	Grid.
A P	Amplifier Plate
Ex P	Exciter Plate
Ex G	Exciter Grid
Gnd	Ground
C W	Continuous Wave
I C W	Interrupted Continuous Wave
FV-1, FV-2	Filament Voltmeter Leads
FR-1, FR-2	Filament Rheostat Leads
K-1, K 2	Operator Key Leads
G F	Generator Field Lead.
AC-1, AC-2	77 Volts, 60 Cycle a-c from Motor.
HV +, HV −	1000 Volts from Generator
L-1	Exciter Grid Radio-Frequency Choke Coil
L-2	Exciter Plate Radio-Frequency Choke Coil
L-3	Amplifier Grid Radio-Frequency Choke Coil.
L-4	Amplifier Tube Grid Choke Coils.
L-5	Exciter Tube Grid Choke Coil (Master Oscillator)
TS	Short Wave Antenna Coupling Transformer
TL	Long Wave Antenna Coupling Transformer
R G.	Receiving Set Ground
R A	Receiving Set Antenna
N C.	Neutralizing Condenser
A	Terminal for Separate Receiving Antenna.

transfer switch to place either in the circuit, depending on the frequency desired.

Two control knobs on the panel, each marked " Range Switch," permit both the short wave and long wave ranges to be divided into two parts; 600 to 900 meters and 900 to 1250 meters for the short wave, and 1250 to 1800 and 1800 to 2500 meters for the long wave.

The following tabulation gives the approximate relation between antenna current and wavelength for the ET-3626-B when used with the average ship's antenna:

Wavelength	Antenna Current	Transfer Switch	Exciter or Oscillator Range	Antenna Inductance
600- 900	10 1	Down	600 - 900 SW	600- 900 SW
900-1250	10 0	Down	900-1250 SW	900-1250 SW
1250-1800	9 8	Up	1250-1800 LW	1250-1800 LW
1800 2500	9 4	Up	1800-2500 LW	1800-2500 LW

A key relay operated by power from a 100-volt d-c. supply through a resistance and hand key controls the grid circuits of both the master oscillator and amplifier tubes. While the key is up a negative bias of 250 volts is applied to all grids, thus stopping oscillation and insuring continued blocking of the plate current. The keying relay is also provided with additional contacts giving break-in operation. While the key is up the receiving set is connected to the antenna and the relay is adjusted to have the break-in contacts close before the keying contacts close and also to have the break-in contacts open after the keying contacts open. This arrangement prevents sparking at the antenna contacts and reduces the disturbance from clicks in the radio receiver.

The motor armature of the motor-generator set is provided with slip rings from which 77-volt, 60-cycle power is obtained for filament heating. A step-down transformer gives the required filament input voltage with regulation through a rheostat. The d-c. generator for plate excitation is a two-pole shunt-wound separately excited machine delivering a potential of 1000 to 1200 volts direct current.

PLACING THE ET-3626-B INTO OPERATION

(1) Before starting the motor-generator set, turn the filament and generator field rheostats to minimum voltage positions and close the main line switch if it has been opened.

(2) To start the motor-generator set press the " Start " button located on the operator's control unit, which closes the first contactor on the motor

starter and from one to two seconds later the running contactor closes and the machine comes up to full speed. Now adjust the filament voltage to 10 volts by means of the rheostat, which is also mounted on this unit.

(3) The plate voltmeter should be observed while making adjustment of the generator field rheostat until a reading of 1000 volts is obtained. The plate current ammeter should read about 1.2 to 1.4 amperes.

(4) The transfer switch should be thrown up if transmission is desired on the long wave range between 1250 and 2500 meters, or down for the short wave range between 600 and 1250 meters.

(5) The exciter tuning and range switch on the lower part of the panel is next placed in the wavelength position desired, the short wave range being on the left and the long wave range on the right.

(6) The above wavelength adjustments are followed by placing either one of the antenna tuning switches in its proper position according to the range desired, the short wave range switch is on the left and the long wave switch on the right. The operator must be careful to place the exciter range switch in correct position corresponding to the exciter range switch for a given wavelength.

(7) The " test " button on the panel may be depressed in order to ascertain if maximum antenna current will be obtained for a certain wavelength which will be indicated by the antenna ammeter deflection. To obtain the best adjustment, turn the antenna tuning control until the antenna ammeter indicates a maximum current reading. This tuning adjustment is attached to the variometer rotor coil and consequently it may be manipulated for any particular wavelength; it resonates the radiating or open circuit with the closed circuit.

(8) When a satisfactory radiation indication is obtained after tuning the set as outlined above, the sending key may be operated for the transmission of messages.

(9) Before sending a message be sure the " C.W.-I.C.W." switch is in proper position, which, of course, is governed by the type of receiver employed at the station with which communication is to be established. When the sending key is closed and with the " C.W.-I.C.W." switch thrown to the " I.C.W." position the audio oscillator will generate one of three tone frequencies and operate in conjunction with the master oscillator and radio amplifiers. The tone frequency switch is located within the transmitter frame on the right-hand side and should not be touched while the motor-generator set is running, as the d-c. voltage is on the circuits.

10. When communication is completed the set is shut down by pressing the " Stop " button on the operator's control panel.

Theory of Operation.—Referring to the schematic diagram in Fig. 355, only one coil system called the *exciter circuit*, involving the generation of oscillations, is shown, since the circuit is fundamentally alike for the two wavelength bands. Only one antenna variometer, 16, is shown for the same reason, although two such coils are in the actual set.

Looking at the actual set from the front, the left-hand tube is used as the master oscillator, coupled to a split inductance or "Hartley" type circuit to produce oscillations. In the diagram this tube is the second one from the right with its oscillating circuit (exciter circuit), consisting of variable inductance 3 and two fixed condensers 4. The inductance is used to adjust the circuit to the various frequencies or wavelengths.

The capacitance of the condensers is .004 mfd. and .002 mfd. respectively and they function in conjunction with the long and short wave exciter, coil 3, for varying the frequency. The feed-back voltage built up across inductance 3 between the taps marked *G* and *F* is used to excite the oscillator grid through the .004 mfd. coupling condenser 7. This condenser blocks the d-c. grid current from the oscillating circuit. The loss of high-frequency energy in the grid leak and keying circuit is prevented by the r.f. choke 8. The correct normal negative grid bias for the oscillator is obtained by the use of the 5000-ohm grid leak resistor 6 which acts to hold back a certain quantity of electrons on the grid when the circuit is in a state of oscillation. The positive d-c. voltage is fed to the oscillator plate through a choke 1 which prevents the radio-frequency from backing up in the power-supply circuit. A blocking condenser 2 having a capacitance of .004 mfd. is inserted in the plate lead *P* connecting to the oscillatory circuit in order to furnish a low reactance path for the high frequency a-c. component of the fluctuating plate current. The d-c. component of the plate current is blocked by this condenser but flows without opposition through choke 1 and to the generator. The inductance 3 is varied by means of the rotating coil marked on the diagram with a long arrow while the actual control knob on the transmitter panel is labeled either "Short Wave" or "Long Wave" exciter tuning. The neutralizing condenser 5, having a capacitance of .00014 mfd., is designed to prevent any reaction effects due to coupling between the amplifier circuit and the master oscillator, a condition always present due to the self-capacity (grid to plate capacity) of the amplifiers. Choke 9 in the oscillator grid is used to prevent the production of *ultra high frequencies*, also generally known as *parasitic oscillations*.

The six amplifier grids are coupled to the master oscillator circuit through condenser 12 and receive their excitation from the adjustable lead *G* on the inductance 3. A .004-mfd. condenser 12 serves to bypass the high frequency oscillations while at the same time it blocks the d-c. bias voltage of the amplifiers obtained through the use of the grid leak resistor 15. This 100-ohm resistor operates to hold an adequate number of electrons on the amplifier grids, thus furnishing the correct nega-

tive bias when the oscillations produced in the master oscillator circuit are being increased in power by the amplifiers. This condition obtains when the transmitting key is depressed when the radiation of a signal wave is desired.

The amplifier plates receive their excitation from the 1000-volt generator through the plate coil of the antenna coupling transformer 10. The choke 14 builds up a high reactance to radio-frequencies and blocks the flow of this energy through the grid leak and keying circuits, thus preventing high-frequency losses.

Inductive coupling between the closed and open circuits is provided by antenna transformer 10. Two such transformers are included in the transmitter, the long wave on the left side and the short wave on the right side. The radio-frequency component of the plate current of the six amplifier tubes passes through the primary of 10, causing a rapid change in magnetism which acts on the secondary turns and as a consequence an alternating e.m.f. is induced in the latter coil which sets the antenna system into excitation. The large output power of the amplifier tubes is delivered to the antenna in this manner. The 6.0-mfd. condenser 20 furnishes a low-reactance path around the generator for the radio-frequency component. For a given plate voltage the amount of power transferred to the antenna is controlled by the ratio of turns in transformer 10. For example, a larger number of turns used in the secondary or antenna coil than in the primary will increase power. The proper relation of turns is made at the time the set is calibrated and does not require adjustments by the operator. Loading the antenna is accomplished with a tapped inductance 16 provided with a rotor coil for fine tuning the antenna by the variometer method. It has been previously stated that two such devices are included in the transmitter and controlled by knobs on the front of the panel.

Small choke coils 11 are connected in the grids of the power-amplifier tubes and are placed as close to the tube sockets as practicable. The function of these chokes is similar to choke 9 in the master oscillator grid circuit.

The transmission of telegraph signals is accomplished by the keying relay 17 controlled by the hand key, the latter being energized from the 110-volt d-c. supply, with a 250-ohm current controlling resistor in series. The auxiliary contacts while associated with relay 17 are shown in the antenna circuit at 17*A*. Break-in operation is provided by the closing of the auxiliary contacts preceding the closing of the grid circuit contacts. The diagram shows the connection of the grid return from all tubes to the negative 1000 volts at point marked *x*, and the filament circuit to the tapped point on resistor 18. This resistor is attached to

the positive and negative of the d-c. generator and serves as a potentiometer. The amplifier grid return is through switch contact 21*A* when c.w. transmission is employed. It should be particularly observed that the negative 1000 volts is not grounded, but the ground is formed at the tapped point on potentiometer 18. According to the principles explained by Ohm's Law we know that a drop in voltage of a definite amount will result in the windings of this resistance when current flows through. The amount of the voltage, in this instance called bias voltage, depends upon the strength of the current and the resistance of the unit 18 measured in ohms. Hence, when the sending [illegible] radio energy cannot be radiated, because the large negative [illegible] used to from 18 is applied to the grids and oscillation stops. [illegible] censer 7. current of low value passing through potentiometer [illegible]g circuit. generator places a holding bias on the grids. The t[illegible] circuit is the potentiometer is 40,000 ohms; it consists, however [illegible]d bias for resistors joined in series. The 1.0-mfd. condenser 19 is [illegible] tion unit connected in shunt with the contact point [illegible]f key relay 17. Large potential surges due to keying the circuit are [illegible]bed and dissipated by the 6.0-mfd condenser 20. This condenser also functions as a filter condenser for smoothing [illegible] commutator ripples from the 1000-volt generator and also serves as r.f. bypass condenser.

I.C.W. telegraphy is accomplished by modulating the output of the power amplifiers with an audio-frequency current obtained from the audio oscillator circuit consisting of three capacitors labeled 23 and the secondary winding of the iron core transformer 22. The tube functioning in conjunction with this low frequency circuit is known as the audio oscillator tube, the first tube on the left in the schematic diagram. In the actual set this tube is located directly behind the master oscillator tube. The production of an oscillating current in the audio-frequency range is possible through the feed-back of power from the plate or primary winding of 22 to the grid or secondary; this action takes place due to the changing flux permeating the iron core which always accompanies all variations in the strength of the plate current. A low frequency current is generated in the grid circuit by employing condensers of high capacitance and building up a large inductive reactance in this circuit through the use of windings composed of a large number of turns together with an iron magnetic circuit. The grid of the audio oscillator connects to one side of the secondary winding of 22 and receives its excitation from the alternating voltage of low frequency induced in this winding from the fluctuating plate current in the primary. The opposite end of the secondary is joined to the negative 1000 end of the potentiometer 18 at point *x*.

In order to carry on I.C.W. telegraphy with this transmitter the "C.W.-I.C.W." switch on the panel is thrown to position marked "I.C.W.," thus closing switch 21 in the schematic diagram. The closing of this switch supplies power to the audio oscillator tube plate from the d-c. generator, while at the same time switch 21*A* opens and removes the short circuit around grid resistor 13 and the secondary winding of transformer 22. The audio oscillator grid return is completed at point *x*, which provides this tube with a blocking bias for keying, similar to the condition existing on the grids of the other tubes in the transmitter when the sending key is up. An inspection of the diagram shows that by antenna t *A* is open the grid leak current of the six-power amplitransmitter, ow through resistor 13 and the secondary of transformer right side. this interrelation between the radio and audio circuits six amplifier y a-c. voltage induced across the secondary by the change in ma current in the primary of 22 is effectively applied on sequence on the grids of all the radio power amplifiers, for these tubes are arranged in parallel—all the grids connected to one common junction which leads to con 12 and also to the grid leak circuit consisting of choke 14 and lea resistor 15.

When the sending key is closed the output of the audio oscillator is impressed upon the grids of the amplifiers, while these tubes are at the same time operating to step-up the strength of the continuous oscillations received from the master oscillator. It follows that for any change in grid potential at an audio rate the amplitude heights of the continuous oscillations also will be forced to vary in exact accordance with the wave form and frequency of the audio energy. It can be said that the c.w. energy is modulated with the frequency of the audio oscillating circuit. The *c.w.* energy is known as the *carrier* frequency and it will be recalled that this frequency is generated in the circuits of the master oscillator and amplified through the six-power tubes. Hence, an I.C.W. signal, or better a modulated wave signal, is transmitted, which after being intercepted and made audible in the distant receiving set, produces a signal having a characteristic spark tone. The term *tone modulation* may also be applied to this variety of telegraphic transmission.

The audio oscillator circuit can be adjusted to three different tone frequencies by varying its capacitance. Three c densers marked 23, and a switch making suitable connections are provided for this purpose. By proper selection of condensers, two of which are rated at 0.5 mfd. each and the third at 1.0 mfd., the tube grid bias can be made to vary approximately at a rate of 500, 700 or 1000 cycles.

When operating I.C.W., overloading of the audio oscillator with d-c.

current from the power amplifier grids is prevented by the 3000-ohm resistor 13, which also acts as a grid leak resistance for the amplifiers in addition to resistor 15.

The grid return of all tubes finally terminate at a tapped point on the filament balancing resistor when key contacts 17 are closed. The insertion of this small amount of resistance in the grid circuit requires the use of the .5-mfd. bypass condenser 24 in order to provide a path of low reactance to the radio-frequency energy. While the audio oscillator functions normally during I.C.W. transmission a negative bias of correct value is maintained upon its grid by the 5.0-mfd. grid condenser and 3000-ohm leak resistor marked 25 on the diagram. During C.W. operation the audio oscillator ceases to function because switch 21 is open, and at this time the grid leak circuit for the power-amplifier tubes is through grid leak resistor 15, radio-frequency choke 14, and switch 21*A* which is then closed, and thence to the negative 1000-volt side of potentiometer resistor 18 indicated on the diagram at point x.

The instruments on the transmitter panel are labeled on the schematic diagram as follows: A_1 is the antenna current ammeter, 0.15 amperes, which is necessary to ascertain when resonance is established between the closed and open circuits on any of the different transmitting wavelengths while adjusting the antenna variometer controls; A_2 is the plate current ammeter, 0.5 ampere, which records the amount of direct current flowing from the d-c. generator to the plates of all eight tubes; V_1 is the plate d-c. voltmeter equipped with a 0 to 1500-volt scale and used in conjunction with the multiplier resistance to indicate the positive plate potential applied to the plates, and V_2 is the filament a-c. voltmeter which should be maintained at a normal value of 10 volts, with a range of 0 to 15 volts used to indicate the input e.m.f. applied to the filament terminals which provides the correct filament temperature. The filament voltage should always be maintained at a normal value of 10 volts to insure long tube life.

The radio-frequency chokes 1, 8 and 14 are 400-turn duolateral-wound coils.

Troubles and Emergency Measures.—It will be found that a majority of the suggestions contained in the following paragraphs are applicable to various types of vacuum tube transmitters.

Defective Tubes. Should any of the tubes become inoperative and no spares are available, the transmitter may still be operated with three or four amplifier tubes in place of the usual six. The plate voltage should be reduced to prevent overheating of the plates of the tubes. Care must be taken that the tube plates do not exceed a dull red. The master oscillator tube, the front left-hand tube, must always be used. I.C.W. transmission cannot be

accomplished without the left-hand rear tube which is the audio oscillator, because this transmitter is not equipped with a chopper.

Plate Radio-Frequency Choke Coil Burned Out. Should the master oscillator plate choke (marked 1 in Fig. 355) burn out, remove the defective plate choke and replace it with grid choke 8, being careful to put in a temporary wire jumper to close the grid circuit. This provides an immediate remedy, but it will be observed that the efficiency of the master oscillator will be impaired. A 400-turn honeycomb or duolateral coil may be used for the plate choke if one is available.

Shorted Plate or Grid Blocking Condenser. This difficulty may be remedied by removing the defective condenser and substituting one of the larger condensers in the other wavelength band. The substitute condenser can be mounted easily in a temporary position by lengthening the connecting leads.

Filament Voltmeter Inoperative. The filament rheostat should be adjusted until the tubes begin to heat or the antenna current drops quickly. When this effect is observed the rheostat should be adjusted slowly in the opposite direction until the temperature of the tubes becomes normal and the antenna current is not rising rapidly.

No Indication on the Antenna Ammeter. The antenna circuit may not be in resonance, or the trouble may be due to loose connections. Examine the antenna variometer and coupling transformer in the wavelength range that is inoperative. Also, look for open switch blades—or spread in them—in the transfer switch. If lack of antenna current is thought to be due to a burned-out ammeter place a wire jumper between the meter terminals and note the results. If this is found to be the seat of the trouble, the only alternative is to adjust the circuits in accordance with the tuning record and observe the plate current ammeter for final resonance.

Burned-out Plate Ammeter or Voltmeter. If the voltmeter is burned out no temporary repair is possible. It is suggested that the generator field rheostat be adjusted to its usual position and the tubes watched closely to prevent overheating of the plates. In the case of a burned-out plate ammeter a 150-watt lamp can be connected to the meter terminals and for normal operation the lamp should not exceed full brilliancy.

Burned-out Filament Transformer, Filament Rheostat, or the discontinuance of the a-c. supplied from the two slip rings on the Motor Armature. The filament circuit should be disconnected from the filament transformer secondary and then connected to the terminals of a storage battery in the following manner: Connect five cells in series and then attach the filament terminals across the five cells. The connecting leads should be capable of carrying 30 amperes. If the cells are of the lead-acid type a rheostat control will not be required because the voltage of the five cells is practically correct, or 10 volts.

Burned-out Grid Leak. Should the grid leak of the power amplifier burn out, it may be replaced by an equal value of resistance approximately 4000 to 10,000 ohms. A satisfactory substitute may be made up with a rubber hose about 10 in. long, filled with water and plugged at each end with a connecting wire passing through each plug and protruding a short distance in

the water to form suitable electrodes. A small amount of salt or washing soda should be added if the resistance seems too high.

Motor Generator. If the machine fails to start when the " start " button is pressed, look for an open main switch on the starter panel, or a defective main fuse. The operator should ascertain if there is line voltage at the main switch and if it is of the correct value. A test for line voltage may be easily made by depressing the telegraph key, which should cause the relay key to work providing the ship's power is on.

If the contactor in the automatic starter closes when the " Start " button is pressed, but the motor-generator armature fails to rotate, the trouble might be due to a burned-out starting resistance on the back of the starting panel, or it would be well to look for loose connections.

A frozen bearing will prevent any movement of the armature. To ascertain this condition, first open the main switch and with the power off turn the armature over by hand and at the same time inspect the oil wells and rings to see that they have plenty of oil.

Tube Filaments do Not Light. If the motor-generator starts up satisfactorily but the filaments fail to light, look for blown fuses on the terminal board, which might happen provided a tube filament has been previously short-circuited. Also look for defective brush or insufficient brush tension on the motor slip rings or loose connections.

Tubes Overheating. Suppose the tubes overheat while the key is up. It is possible that a low voltage bias caused by a defective potentiometer resistance will not block the tubes sufficiently. Or the bias voltage may be partially short-circuited by an amplifier tube which has become soft, this condition being generally evidenced by the troublesome tube showing a blue haze and heating more than the other tubes.

If, on the other hand, the tubes overload only while the key is down, the master oscillator tube may be defective, that is, oscillations are not being generated in the oscillator's tuned circuit. In order to determine the possible reason for this trouble remove the six amplifier tubes from their sockets but keep the master oscillator and audio oscillator tubes in place. When the key is now depressed the oscillator tube will heat excessively if the tube or circuit is defective.

However, if the amplifier plates exceed a dull red glow with the key down and the antenna in resonance it may be assumed that an incorrect number of plate turns is used or the antenna coupling transformer is defective.

Audio Oscillator Circuit Fails to Operate. For the location of this trouble look at all connections on the " C.W.-I.C.W." switch, audio transformer 22 and condensers and switch 23, indicated on the diagram in Fig. 355. The audio oscillator tube may be defective and the remedy in this event is obvious. One of the three condensers 23 may have broken down. Should the plate current rise excessively when the key is pressed while the audio oscillator seems to function properly the trouble may be due either to a shorted amplifier grid leak or to audio oscillator grid leak, both of which units are rated at 3000 ohms.

Observe the Following Precautions.—Never clean commutators with the motor-generator set running, because the high voltage end is dangerous. Do not change tubes or make adjustments or come into contact with the wiring while the set is in operation.

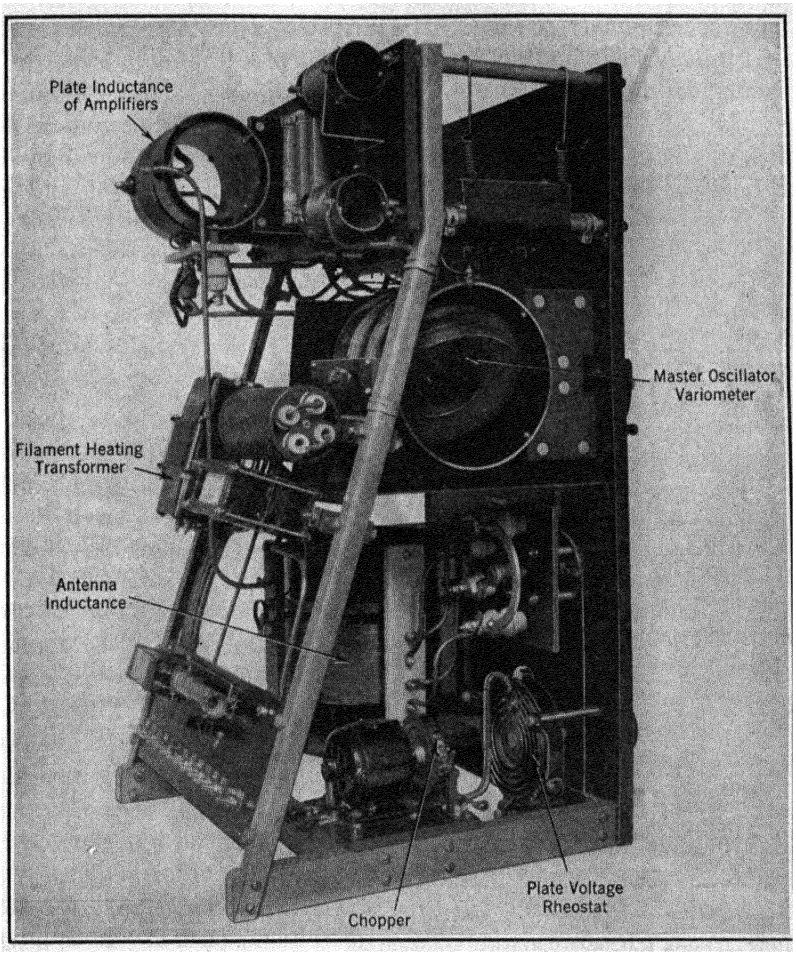

FIG. 357.—View of the 200-watt tube transmitter model ET-3627.

ET-3627—200-Watt Transmitter.—This transmitter is of the master oscillator-power amplifier type. There are three 50-watt type vacuum tubes used as follows: one UV-211 as the master oscillator and two UV-211 tubes connected in parallel as power amplifiers. The photographs in Figs. 357 and 358 show the location of the component parts. The front panel view in Fig. 359 illustrates the various controls.

The schematic diagram for this transmitter is shown in Fig. 360. The power amplifiers increase the strength of the continuous oscillations generated in the circuits of the master oscillator and feed their output to the antenna system through the coupling transformer T_1. The primary or plate coil of T_1 is called the tank inductance. The grids of the power amplifiers receive their excitation from the master oscillator through the coupling or bypass condenser C_9. The resistor R_4 prevents overloading of the amplifier grids with radio-frequency voltage. Continuous oscillations are produced by the Colpitt's method of feed back which utilizes the voltage drop across the plates of condenser C_7 for grid excitation.

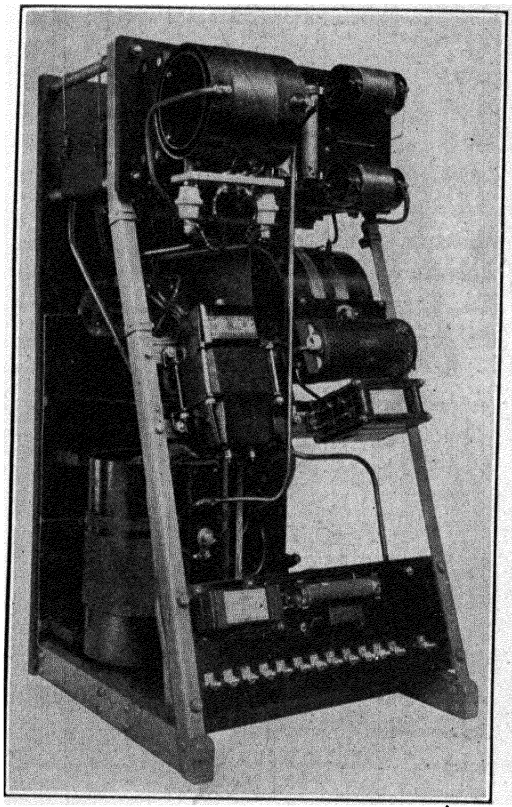

FIG. 358.—Type ET-3627 200-watt transmitter.

The principal circuits of the ET-3627 are substantially the same as those in the ET-3627-A transmitter. A description of the latter transmitter is given in the section immediately following. The ET-3627-A is different from the ET-3627 because of the slight modification made necessary to provide the ET-3627-A transmitter with break-in operation through a magnetically operated relay controlled by the operator's sending key.

Placing the ET-3627 in Operation.—It is advisable before starting the motor-generator set to turn all rheostat knobs to the extreme right. The "start" push-button which operates the automatic motor starter is pressed and the motor-generator will come up to speed in a few seconds. The filament rheostat R_5 should be adjusted until a filament voltage of 10 volts is obtained, as indicated on the meter V_1. The filaments are all arranged in parallel and connected to the step-down

transformer T_2 having an input frequency of 40 cycles supplied by two slip rings provided on the motor winding. The plate voltage is now adjusted by means of the plate rheostat until a normal working voltage of 1000 volts is observed on the indicating meter V_2. The switch marked "C.W.-I.C.W." should be placed in the proper position, deter-

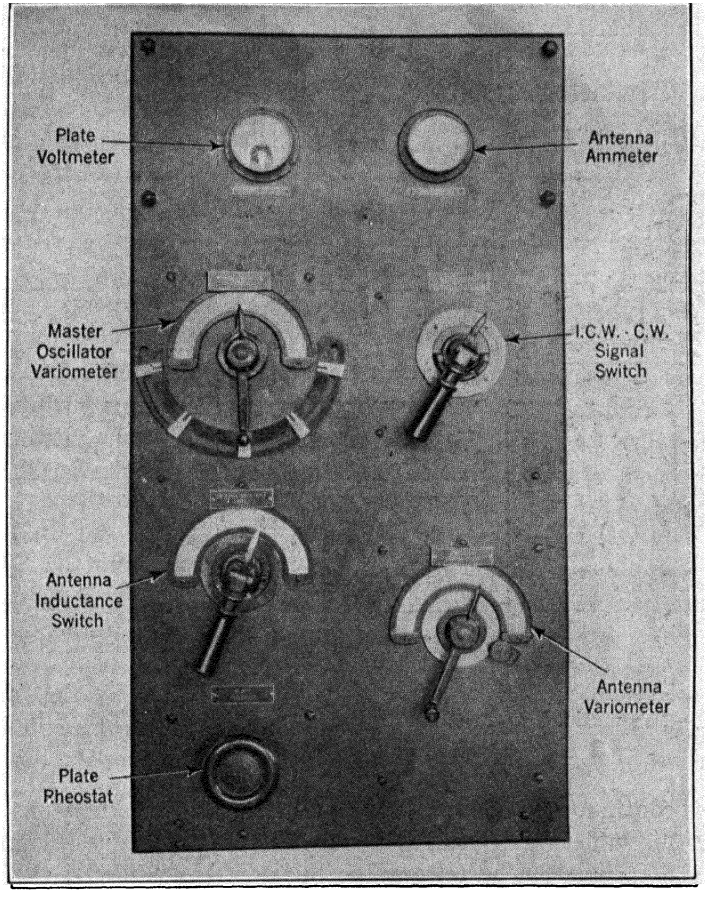

FIG. 359.—Front-panel view of the 200-watt tube transmitter, type ET-3627.

mined by the type of transmission desired. If this switch is thrown to the I.C.W. position the switch shown across chopper commutator is opened. At the same time the chopper motor switch closes and the chopper will be set into rotation and its commutator will function to interrupt the continuous oscillations.

Communication with a distant station may now be carried on by closing the transmitting key. Before the key is operated the master oscillator variometer should be set at the desired wavelength by means of the handle provided for that purpose. While the key is pressed the antenna may be resonated by turning the handle marked "Antenna Variometer," which moves the rotor coil mounted within the loading inductor labeled L_1 on the schematic diagram. The antenna wavelength is changed by means of the four-point switch shown on L_1, which is operated by the long handle on the transmitter panel marked "Antenna Inductance Switch." The inductance range of the trans-

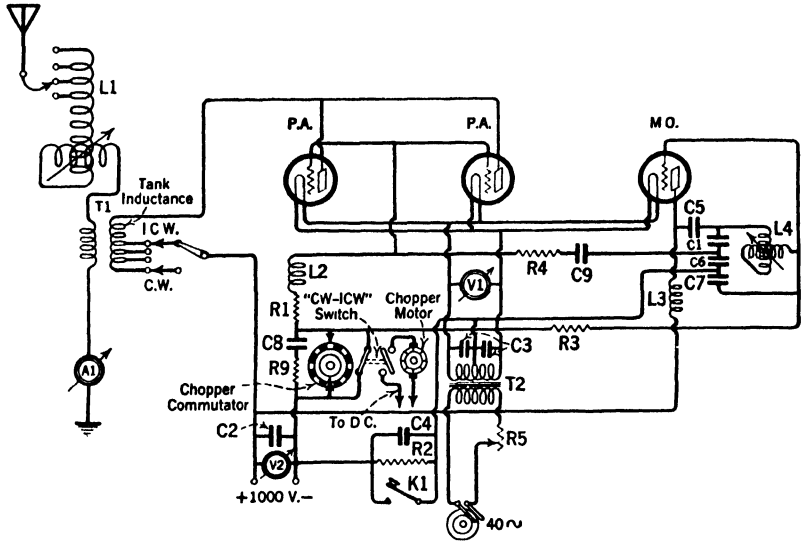

FIG. 360.—Schematic diagram of connections in the 200-watt ET-3627 tube transmitter.

mitter is continuous because the range of the antenna variometer, shown below L_1, is sufficient to overlap the taps on the loading inductance L_1. When the transaction of telegraphic business is completed the transmitter is placed out of operation by simply pressing the "Stop" button.

In order to insure the radiation of a clear I.C.W. note the chopper commutator should be smoothed off during periodic inspection of the transmitter units. A very fine grade of sandpaper should be used for this purpose, taking care to prevent unequal wear between the insulation and the copper segments. It is advisable at the same time to inspect the spring silver brushes for their proper tension against the periphery of the commutator wheel and make adjustments if necessary.

The current in the antenna system as read on the antenna ammeter, and the plate current for various wavelengths from 570 to 1000 meters, is given in the following tabulation to inform the operator regarding the average performance expected of the ET-3627. The values listed below were obtained with the transmitter used on an antenna having a natural period of 315 meters and when radiating a c.w. signal. The reading on the scales for each of the tuning control adjustments is also given. The tubes were supplied with working voltages of 1000 volts plate potential and 10 volts filament.

Wavelength	Antenna Current	Plate Current	Reading on Scales		Position of Antenna Inductance Switch
			Master Oscillator Variometer Degrees	Antenna Variometer Degrees	
570	7 3	.6	0	74	1
625	7 3	6	20	107	1
690	7 1	.58	40	149	1
750	6 9	575	60	41	2
810	7 0	58	80	57	2
858	7 0	.585	100	72	2
910	6 9	.585	120	92	2
945	6 9	.575	140	114	2
970	6 8	565	160	130	2
1000	6 7	.56	180	137	2

200-Watt Type ET-3627-A Transmitter.—Figure 361*a* shows a front view of the 200-watt continuous wave and interrupted continuous wave vacuum tube transmitter. (Side and rear views are shown in Figs. 361*b* and 361*c*.) The fundamental circuits of this transmitter, shown in Fig. 362*a*, are quite similar to those in the ET-3627. The principal change from the circuits of ET-3627 is the installation of a break-in relay in the ET-3627-A to meet the modern requirements in handling commercial radio traffic with maximum speed. An adjustable positioning device for the master-oscillator variometer permits any five frequencies within the 500 to 312-kilocycle band to be selected and kept in a permanent adjustment. This provides a convenient arrangement, because in changing from a calling to a working frequency the operator is not required to make careful adjustments to locate an exact position on the scale with the master-oscillator pointer. Three UV-211-50-watt vacuum tubes are employed, one functioning as the oscillator and the

remaining two being connected in parallel as power amplifiers. The connection diagram for the motor-generator unit is shown in Fig. 362-*b*.

Theory of Operation.—The theory of operation of the 200-watt ET-3627-A transmitter may be understood by referring to the schematic diagram in Fig. 362-*a*. The frequency of the UV-211 master-oscillator tube is controlled by the variometer L_4 which operates in a capacity-coupled (Colpitt's oscillator) circuit. The grid alternating e.m.f. nec-

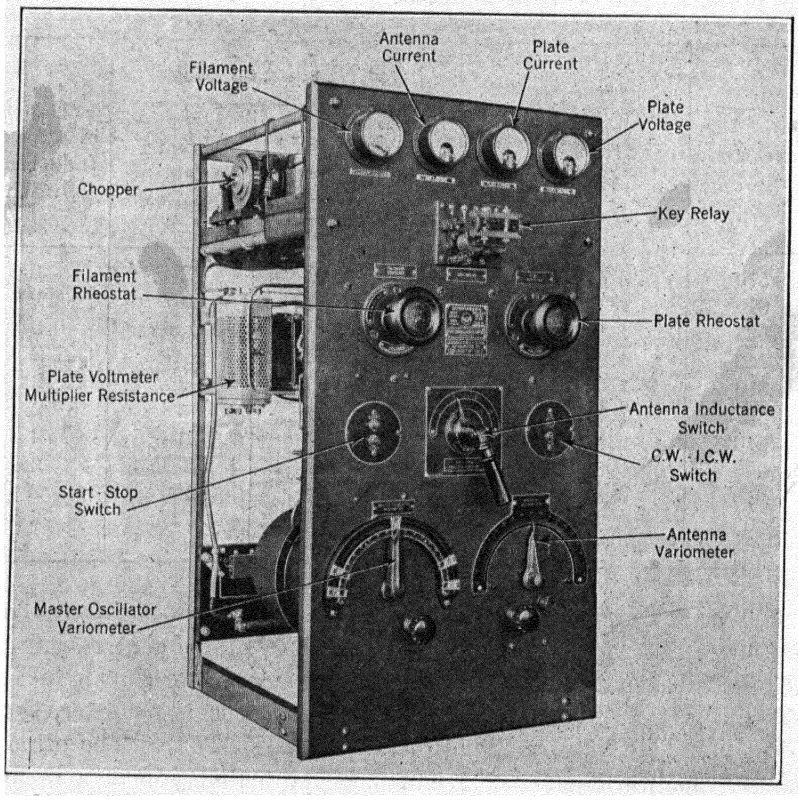

FIG. 361*a*.—Front panel view of the 200-watt tube transmitter type ET-3627-A.

essary for the promotion of continuous oscillations is obtained from the voltage drop across condenser C_7. The values of capacitance of the three condensers C_1, C_6 and C_7 and the inductance of variometer L_4 are carefully selected because they represent the circuit constants and therefore determine the frequency range of the transmitter. Condenser C_5 is the usual plate-blocking condenser and serves to keep the d-c. plate voltage off the grid and oscillatory circuit of the master-oscillator tube.

This condenser of .003-mfd. capacitance provides a low reactance path for the radio-frequency component of the total plate current, allowing it to flow into the oscillatory circuit for the requisite feed-back of plate energy into the grid. Radio-frequency choke L_3 keeps the plate high-frequency component from backing into the 1000-volt generator circuit. The grids of the two UV-211 power amplifier tubes are directly connected together, that is, connected in parallel, and are excited by radio energy through condenser C_9 and resistance R_4, at the frequency of the master oscillator (m.o.) oscillatory circuit. Grid leak resistor R_1 maintains the correct negative bias on the amplifiers, and radio-frequency choke L_2 prevents losses of the high frequencies through the grid leak circuit. The grid leak on the master oscillator tube is resistor R_3. The high-frequency energy in the power-amplifier plate circuit feeds into the plate coil (tank inductance) of antenna transformer T_1.

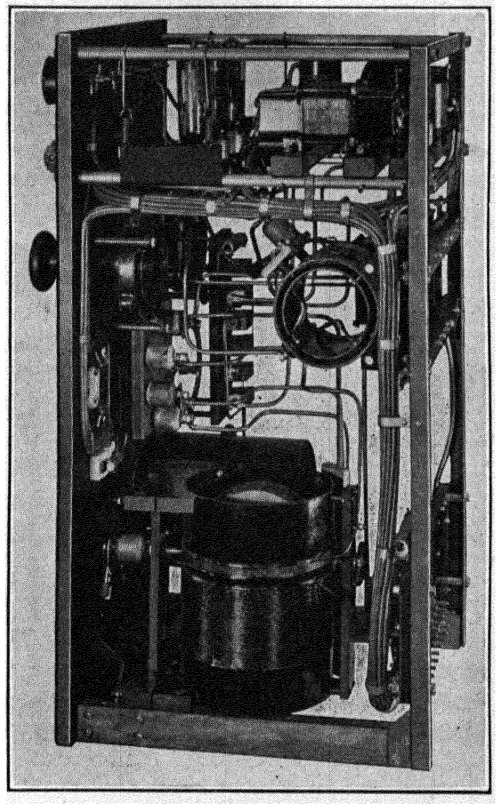

FIG. 361*b*.—ET-3627-A transmitter. Right side view.

The antenna is set into excitation through the transfer of this high frequency from the output of the power amplifier tubes through the antenna transformer T_1. The primary of this transformer carries the "I.C.W." and "C.W." switch. It will be noticed that in the case of interrupted continuous waves the amount of inductance used will never be as great as for straight c.w. This feature allows the radiated wave of the I.C.W. variety to possess sharp characteristics. The frequency of the master oscillator is repeated in the output of the power amplifiers, and the antenna circuit is adjusted for resonance to this frequency by the four taps and variometer on the antenna loading inductor L_1.

Key Relay.—A rapid changeover from *send* to *receive* is provided by the magnetically operated break-in relay which is shown mounted on the front of the panel in Fig. 361-*a*. This relay is designated as K_2 in the schematic diagram. Modern radio traffic conditions require this feature to be provided in the transmitter. Keying speeds up to 40

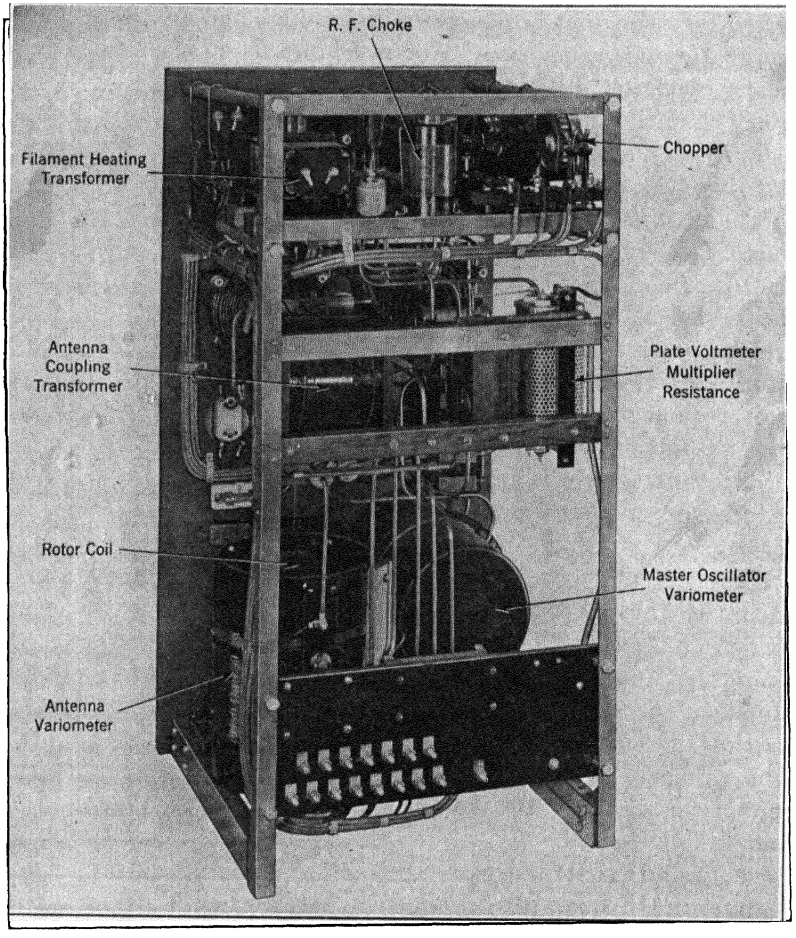

FIG. 361*c*.—Rear view of ET-3627-A tube transmitter.

words a minute are possible with the relay, as it is equivalent to a double-pole, single-throw relay. The low side of the antenna contains one pair of contacts connected in series and during the transmitting periods they serve to short-circuit the input to the radio receiver. In order to prevent sparking at the antenna contacts and also to reduce the disturbance from clicks in the radio receiver, the second pair of contacts

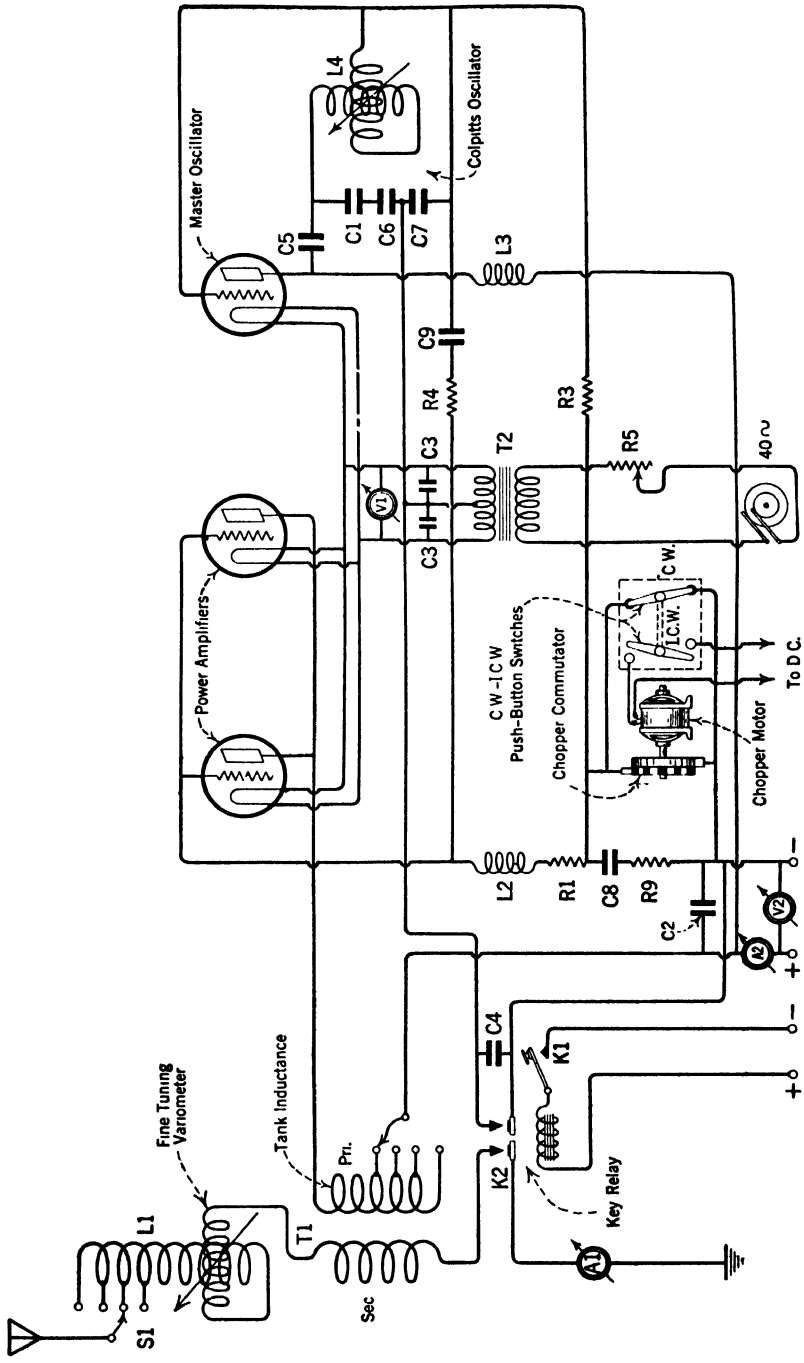

FIG. 362a.—Schematic diagram of the ET-3627-A 200-watt tube transmitter utilizing the break-in system.

key the transmitter proper and are adjusted to close slightly after and open slightly before the antenna circuit contacts.

Keying Circuits.—The explanation of the fundamental keying circuit will be understood by reference to the schematic diagram, where it is seen that the negative lead from the 1000-volt generator connects to one of the key contacts on the break-in relay K_2. The negative plate circuit is completed through the upper right contact of this relay to the mid-tapped secondary on the filament-heating transformer T_2. The

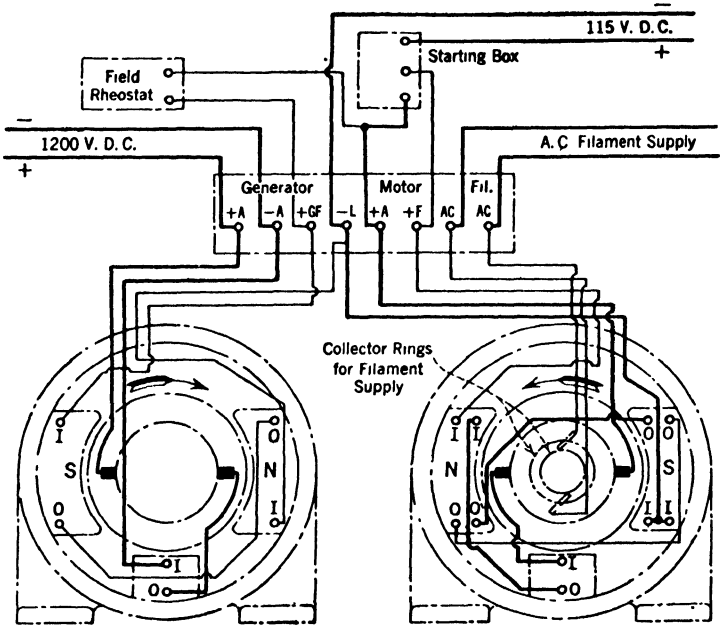

FIG. 362*b*.—The connection diagram for the motor-generator set used with the ET-3627-A tube transmitter. The generator is shown on the left viewed from the commutator end, and the motor is on the right also viewed from the commutator end. Note particularly how the collector rings are attached to the motor armature.

grid return leads of both the power amplifiers and master oscillator are returned to this negative side of the plate circuit through grid leak resistors R_1 and R_3, respectively, after passing through the switch marked "C.W." Both the negative plate circuit and the grid current are broken by the keying action, with the result that oscillations stop, due to the high negative potential impressed upon the grids of the tubes whenever the contacts open. On the other hand, when the sending key is pressed these circuits are closed by the relay, with the result that the high negative blocking potential is removed from the grids and

oscillations are produced. The relay contacts will interrupt a large current with minimum sparking.

Legend and Function of Parts. ET-3627-A Transmitter

Refer to schematic diagram Fig. 362-*a*.

A-1. Antenna ammeter (0–10 amperes) is used to indicate resonance between the tank inductance or plate coil *Pri.* and antenna system.

A-2. Plate ammeter (0-2 amperes) indicates direct current drawn from plate generator by the three tubes.

C-1. Master oscillator plate condenser, .003 mfd., is used for plate excitation of this tube.

C-2. Filter condenser, 1 mfd., acts to smooth out any ripples in the d-c. from the 1000-volt generator due to commutation.

C-3. Filament bypass condensers, .5 mfd. each, furnish a low reactance path for the radio-frequency oscillations from grid to filament. Without these condensers the filament heating coils on the iron core transformer T_2 would form the only r.f. path which obviously would impede the flow.

C-4. Key condenser, .015 mfd., functions to absorb and dissipate transients of potential surges set up while keying. This condition is manifested by arcing.

C-5. Master-oscillator plate blocking condenser, .003 mfd., permits the high frequency oscillating component of plate current to flow through readily, but prevents the d-c. component of the plate supply from being impressed on the oscillator grid or passing to the a-c. tuned circuit.

C-6. Master oscillator plate condenser, .002 mfd., functions similarly to C_1 and forms part of the oscillatory circuit.

C-7. Master oscillator grid condenser, .002 mfd., is known as grid input or excitation condenser and from across its plates is obtained the requisite voltage drop to be applied between grid and filament for maintaining the master oscillator and associated circuits in a state capable of generating continuous oscillations.

C-8. Chopper condenser, .003 mfd., in conjunction with resistor R_9 helps to smooth out any unevenness in the chopper note in order to produce a clear and distinct tone in the telephone receivers.

C-9. Power amplifier grid condenser, .0003 mfd., permits the high frequencies generated in the master oscillator circuit to pass

through and excite the grids of the two radio-frequency power tubes.

F-1. Plate fuse rated at 2 amperes (not shown).

F-2. Receiver antenna fuse, .5 ampere (not shown).

K-1. Hand key used for interrupting the stream of radio oscillations generated in the transmitter into dots and dashes for the dispatch of radio telegraphic messages.

K-2. Break-in relay (key relay) permits a rapid changeover from send to receive, being operated magnetically by the hand key K_1.

L-1. Antenna variometer and four-tap inductance used for loading the antenna in order to establish resonance with the tank circuit.

L-2. Power amplifier grid radio-frequency choke. To prevent losses in the grid leak circuit of the high frequencies flowing from the master oscillator through amplifier feed resistance R_4 and condenser C_9. These radio-frequencies are intended to build up a high value of excitation voltage on the amplifier grids.

L-3. Master oscillator plate choke is in series with the positive lead of the 1000-volt generator and functions to prevent losses by blocking out the radio oscillations from this circuit. These oscillations will flow readily through the low reactance path of C_5.

L-4. Master oscillator variometer permits any five frequencies within the 500 to 312 kilocycle range to be selected.

R-1. Power amplifier grid resistance, 500 ohms, furnishes correct grid bias for stable operation of the two UV-211 tubes.

R-3. Master oscillator grid resistance, 7500 ohms, maintains the grid at correct bias or negative potential.

R-4. Power amplifier feed resistance, 150 ohms, used to maintain the radio-frequency voltage supplied to the power amplifier grids from the master oscillator at a normal value.

R-5. Filament rheostat, 20 ohms, permits a close control of filament terminal e.m.f. of all tubes for working the filaments at their normal temperature.

R-6. Master oscillator parasitic resistor, 15 ohms (not shown), is used to suppress the generation of ultra-high frequencies caused by the plate-to-grid capacity of the vacuum tubes and their coupling leads which give such a circuit a definite oscillation period.

R-7. Plate rheostat, 250 ohms (not shown), allows a fine control of the positive voltage applied to the plates of all tubes.

R-8. Power amplifier parasitic resistor, 15 ohms (not shown), functions similarly to R_6.

R-9. Chopper resistor, 50 ohms, works in conjunction with C_8 to smooth out any unevenness in I.C.W. energy.

R-10. Key relay resistor, 400 ohms (not shown).

S-1. Antenna inductance switch permits convenient change of wavelength from calling wave to communicating (working) wave.

T-1. Antenna transformer consists of tank inductance (plate coil) *Pri.* and antenna coil *Sec.* and is used to provide magnetic coupling between the closed and open oscillatory circuits for the transfer of radio power. The tapped tank inductance allows the proper selection of inductance for either form of transmission, either C.W. or I.C.W.

T-2. Filament transformer, .125 kva., is a mid-tapped step-down iron core transformer which receives power from a 40-cycle supply from collector rings attached to the armature windings of the motor, and delivers an alternating current of 10 volts, when regulated, for heating the filaments, resulting in an adequate electron emission.

V-1. Filament voltmeter, 0–15 volts a-c., should read 10 volts after completing the voltage adjustment by means of the filament rheostat R_5.

V-2. Plate voltmeter, 0–1500 volts d-c., indicates the positive plate potential applied to each of the three plates.

Chopper Motor.—The chopper motor is rated at 1/50 horsepower and is driven from 115-volt d-c. supply. When I.C.W. transmission is desired the signal switch should be placed in "I.C.W." position, closing one pair of push-button contacts marked I.C.W., which closes the d-c. line to the chopper motor, at the same time opening a second pair of contacts marked C.W., thus removing the short circuit maintained around the chopper during C.W. transmission. Two silver spring brushes resting on the commutator of the chopper wheel alternately make contact with the copper and fibre segments, thus causing the grid circuits of the master oscillator and power amplifiers to be broken at the rate of approximately 1000 times a second, to radiate a wave having the general characteristics of the note produced by a 500-cycle spark transmitter.

Vacuum Tubes.—Facing the transmitter panel the tube at the left is the master oscillator and the remaining two tubes to the right are the power amplifiers, both being connected in parallel, as previously mentioned. In the schematic diagram Fig. 362*a* this order is reversed and it may be seen that the master oscillator is drawn at the right, with the two power amplifiers at the left of the diagram. If trouble is ex-

perienced try interchanging all available tubes in the oscillator socket, because a poor tube in this socket will make the set inoperative.

The evaluations given in the accompanying table will enable the operator to ascertain the practical relation between the operating wavelengths and the currents in the various circuits. The positions of the antenna variometer pointer on the scale, indicated in degrees, and the antenna inductance switch, also are recorded.

The ET-3627-A transmitter used on an antenna with a capacitance of 0.0008 mfd., resistance of four ohms, and a natural period of 315 meters, gave the following results, both for c.w. and i.c.w. transmission:

Wavelength	Antenna Current, Amperes	Plate Current, Amperes	Reading on Scale. Antenna Variometer, Degrees	Position of Antenna Induct. Switch
C.W. 600	7 1	0 59	55	1
I.C.W. 600	4 75	0 39	55	1
C.W. 800	7 1	0 6	41	2
I.C.W. 800	4 6	0 39	41	2
C.W. 960	7 25	0 61	102	2
I.C.W. 960	4 6	0 41	102	2

A different set of results was obtained with the transmitter working into an antenna possessing the following characteristics: a capacitance of 0.0004 mfd. and resistance of four ohms.

Wavelength	Antenna Current, Amperes	Plate Current, Amperes	Reading on Scale. Antenna Variometer Degrees	Position of Antenna Induct. Switch
C.W. 600	6 1	0 5	45	2
I.C.W. 600	4 0	0 33	45	2
C.W. 800	6 4	0 5	70	3
I.C.W. 800	4 0	0 32	70	3
C.W. 960	6 25	0 55	79	4
I.C.W. 960	3 5	0 32	79	4

The 2-KW. Model ET-3638 Telegraph Transmitter.—The front and rear views of this transmitter are shown in Figs. 363 and 364, respectively, and the schematic diagram in Fig. 365. An inspection of the diagram shows that the general arrangement of the master oscillator (M.O.) and power amplifier circuits are somewhat similar to those employed in the ET-3627-A transmitter, which has already been

described. The ET-3638 equipment, however, utilizes four vacuum tubes connected in parallel as intermediate power amplifiers (I.P.A.) and an additional loading inductance L_1 in order to increase the frequency range of the transmitter. A ship's antenna with a low capacitance requires the use of an external loading inductance in order to permit transmission on the higher wavelengths. A photograph of the external loading inductance is shown in Fig. 366. When this trans-

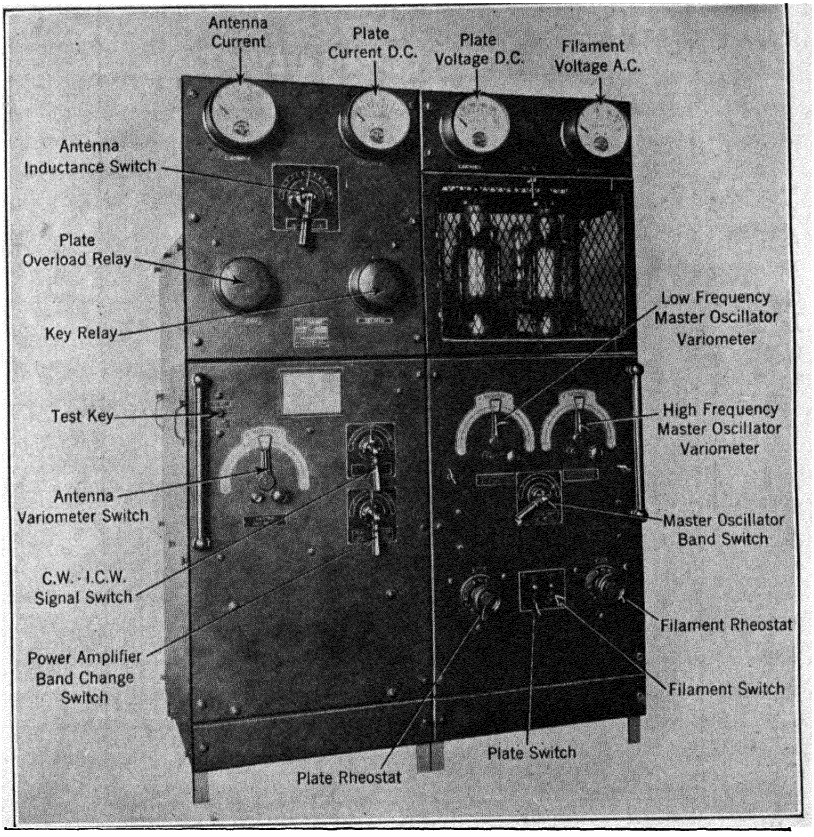

FIG. 363.—Front view of 2-kw. radio telegraph tube transmitter, model ET-3638.

mitter is used on an antenna with the proper characteristics it will cover a continuous wavelength band of 600 to 2400 meters or a frequency range of 125 to 500 kilocycles.

The transmitter employs seven vacuum tubes, one 50-watt UV-211 as a master oscillator, four similar tubes arranged in parallel as intermediate amplifiers and the remaining two tubes, type UV-851, as main power amplifiers. The two UV-851 tubes are shown in the front panel

view, protected by the screen door. These main amplifiers, rated as 1-kw., require a plate potential of 2000 volts d-c. obtained by adjusting the plate rheostat, and the filaments each draw 15.5 amperes a-c. when supplied with the specified terminal voltage of 11 volts. The five 50-watt tubes can be seen in the rear view of Fig. 364. They require a normal working plate potential of 1000 volts d-c. and a filament input

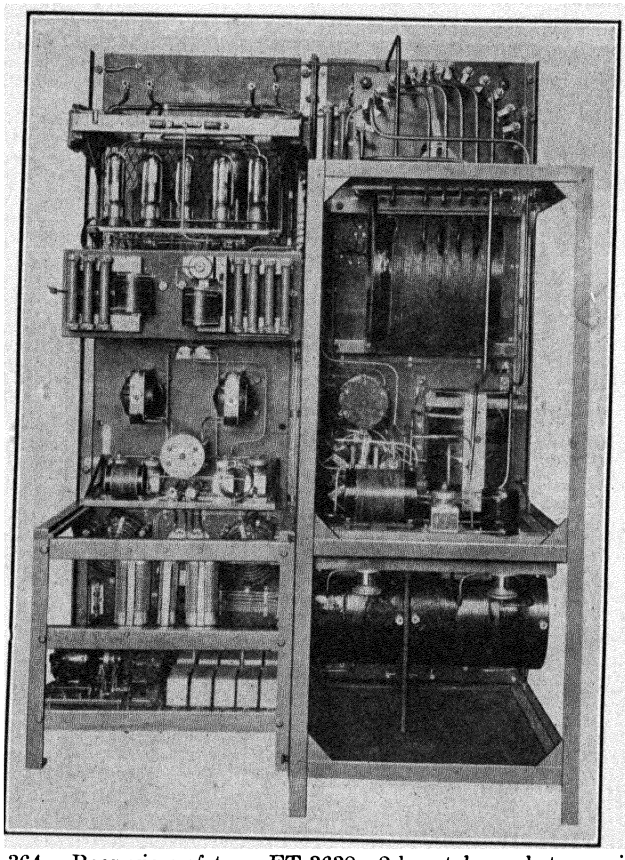

FIG. 364.—Rear view of type ET-3638—2-kw. telegraph transmitter.

e.m.f. of 10 volts. The filaments are heated from 80-cycle power provided by slip rings on the motor winding through the step-down transformer T_2. The filament voltage is regulated by rheostat R_{10}. Since the 50-watt tubes requires less filament voltage than the main power tubes, the output of the filament transformer is connected to the lower power tubes through the resistor R_7, which serves to drop the voltage on the latter tubes to the required value.

Theory of Operation.—The ET-3638 is placed in operation on the desired wavelength by the selection of the proper positions for the master oscillator and the power amplifier band change switches. The master oscillator variometer marked L_8 on the diagram is then placed at the desired wavelength as indicated on the scale provided for that purpose. In order to resonate the antenna with the closed oscillatory circuit for maximum current as read on the antenna ammeter, the rotor coil of antenna variometer L_2 is turned by manipulating the knob on the panel. After the most satisfactory adjustment has been found the

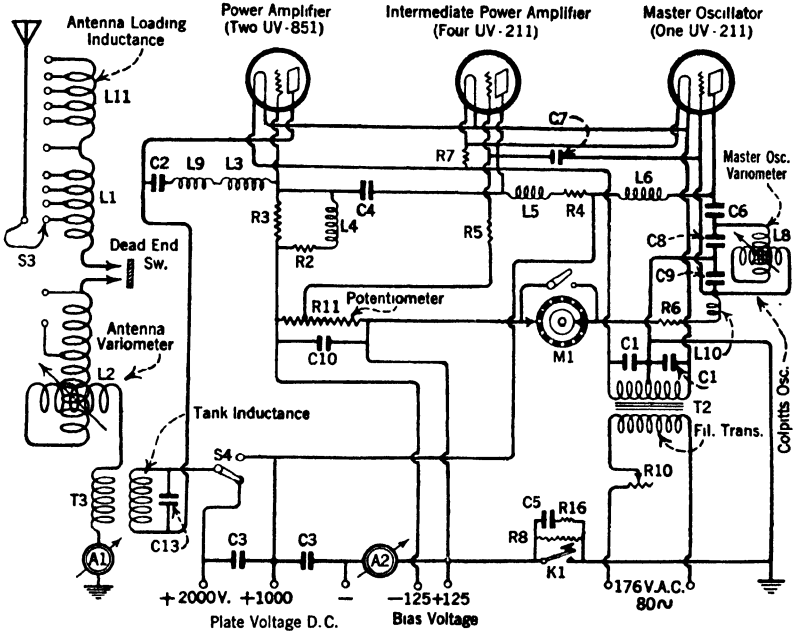

FIG. 365.—Schematic diagram of the ET-3638 vacuum tube transmitter.

position can then be indicated on the scale calibrated in degrees. It is necessary, of course, to supply power to the antenna system whenever the tuning adjustments suggested above are performed, and this may be conveniently done by depressing the "test button." This button functions similarly to the operator's sending key and works the magnetic relay. The keying relay which provides break-in operation is mounted on the panel. It permits the receiver to be connected to the antenna and the transmitter to be disconnected whenever the sending key is up. The motor-generator set is controlled in the usual manner by a "start-stop" push button located on the operator's table.

The circuit employed in this transmitter is of the master oscillator intermediate power amplifier, main power amplifier type. The variometer L_8 and condensers C_8, C_9 constitute the frequency-determining

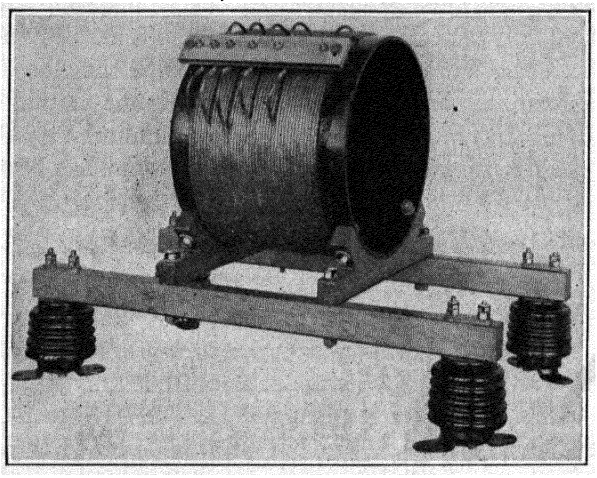

FIG. 366.—External antenna loading inductance used with ET-3638—2-kw. transmitter.

circuit, which is the Colpitts type. The requisite voltage for grid excitation of the oscillator is obtained from the voltage across the plates of condenser C_9. Condenser C_6 is the plate by-pass condenser and serves as a low reactance circuit for the flow of the high frequency component of the plate current.

When the signal switch on the panel is placed in the "I.C.W." position the motor-driven chopper commutator M_1 functions to break the grid leak circuit of the master oscillator and oscillations cease. The group frequency of the transmitted signal on I.C.W. operation is approximately 800 cycles. The path of the oscillator grid current is through the radio-frequency choke L_{10} and grid leak resistor R_6. The excitation of the intermediate power amplifier grids by the high frequency output of the master oscillator is through the by-pass condenser C_7, whereas the output of intermediate power amplifiers feed r.f. voltage to the grids of the power amplifiers through condenser C_4. The circuit is arranged so that whenever the chopper interrupts the oscillator grid, excitation of the amplifiers will cease and the plate current of these tubes will drop to zero. The complete discontinuance of the plate current in the amplifiers minimizes the key clicks and this action is controlled automatically because a cut-off bias is supplied to the grids of the six amplifiers from a 125 volt d-c. bias generator. This generator operates in conjunction with the motor-generator unit and

also supplies the direct current for the excitation of the plate generator field.

In order to minimize the radiation of very high frequency harmonics the capacitance furnished by condenser C_{13}, shown in the diagram shunted across the plate coil (tank inductance) of the antenna coupling transformer T_3, is used to by-pass harmonic energy.

The large radio power transferred from the two UV-851 tubes to the antenna through the coupling transformer T_3 builds up the potential on the antenna side of the loading inductance to values as high as 32,000 volts and an antenna current of about 25 amperes may be expected.

EMERGENCY TRANSMITTER

ET-3650 Transmitter.—The model ET-3650 radio telegraph transmitter described in the following paragraphs is designed primarily for installation on vessels where a low-power emergency transmitter is required. The transmitter is designed to provide only ACW-700 cycle, telegraphic operation on any frequency in the band 375 to 500 kc.

Antenna Characteristics.—The ET-3650 is designed to operate into an antenna having an effective resistance of 4 to 10 ohms, an effective capacitance of 0.0006 to 0.0014 mfd., and a natural wavelength of 225 to 450 meters. The transmitter is suitable also for use on antennas having an effective resistance of from 2 to 12 ohms, but the output will be slightly lower when the antenna resistance is below 4 or above 10 ohms.

Rating.—Four UX-210 vacuum tubes are used in this set. For normal operation, all these tubes are used in the self-excited circuit, also known as the " tank " circuit.

The UX-210 tube is rated to have an output of 7.5 watts, and the filament requires 1.25 amperes at 7.5 volts. The filament voltage should be maintained at 7.5 volts to insure maximum tube life.

Power Supply.—The equipment has been designed to operate on a power supply of 12 volts direct current which is furnished by a motor or storage batteries.

Location of Parts.—Front, side and rear views of the ET-3650 are shown in Figs. 367, 368, 369 and 370. The various units are mounted either on the panel or framework. Particular attention has been directed to securing a symmetrical arrangement of all units on the panel. The sides and top of the transmitter are provided with a detachable cover which totally encloses the transmitter and also permits of easy access to the transmitter proper. The terminal board is located at the right side of the transmitter and near the bottom. (See Fig. 369.) It is necessary to remove the cover while connecting to the terminal board.

The four vacuum tubes are mounted near the top of the set, as shown in Fig. 370. All meters, switches and rheostat controls are mounted on the panel, and controlled from the front, as shown in Fig. 367.

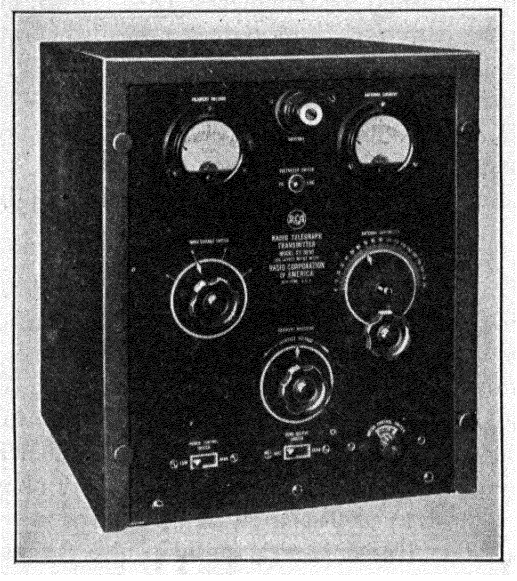

FIG. 367.—Front view of the type ET-3650 emergency telegraph transmitter.

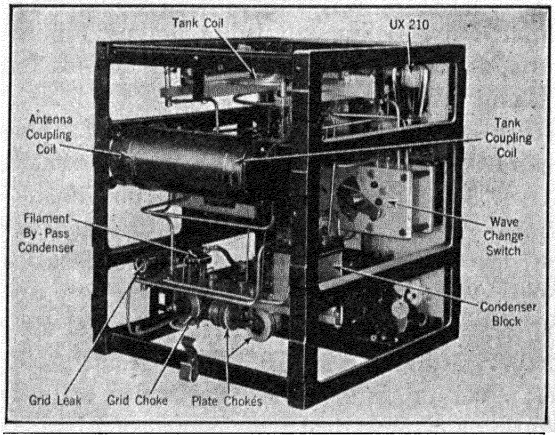

FIG. 368 —Left-hand side and rear view of the ET-3650 emergency telegraph transmitter.

The desired wavelength is selected by means of a wave change switch, located at the left and just below the filament voltmeter, as shown in Fig. 367. This switch selects the proper tap on the tank

inductance and on the antenna loading inductance coil. The antenna circuit is resonated by means of the antenna variometer. The antenna variometer control is located at the right of the panel and below the

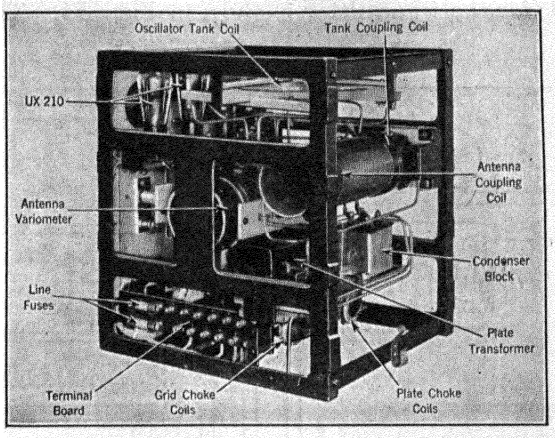

FIG. 369.—Right-hand and rear view of the ET-3650 transmitter.

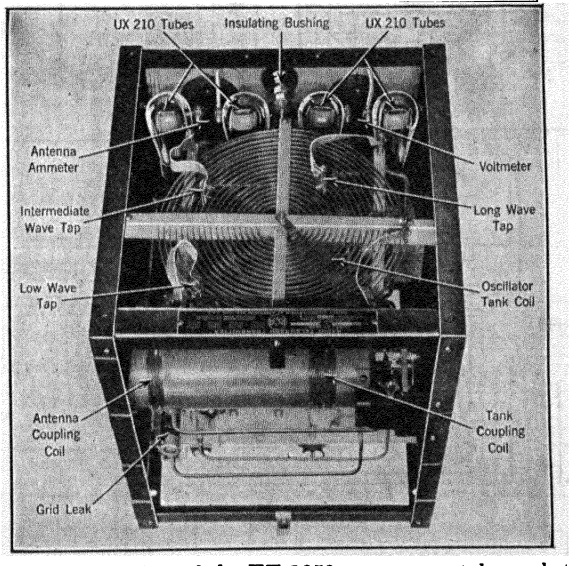

FIG, 370.—Top and rear view of the ET-3650 emergency telegraph transmitter.

power supply voltmeter. All controls on the panel are marked according to the particular function that they perform. The " send-receive " switch is mounted directly in the middle of the panel at the bottom.

The framework of the transmitter is cast aluminum, which makes for a strong light-weight construction. The cover is especially designed to be splash-proof and tight.

Installation and Wiring.—The diagram of connections, both internal and external, for the transmitter is given in Fig. 371. The schematic

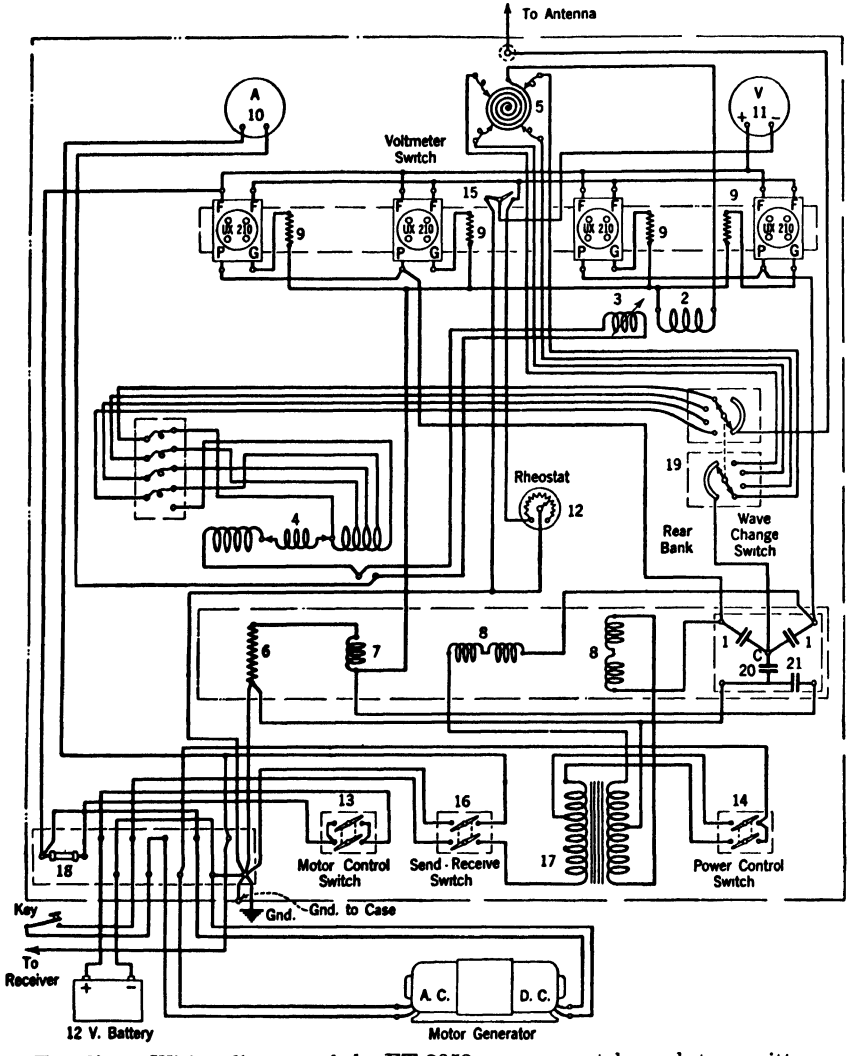

FIG. 371.—Wiring diagram of the ET-3650 emergency telegraph transmitter.

diagram is given in Fig. 372. The various essential units are numbered and identified on both diagrams as follows:

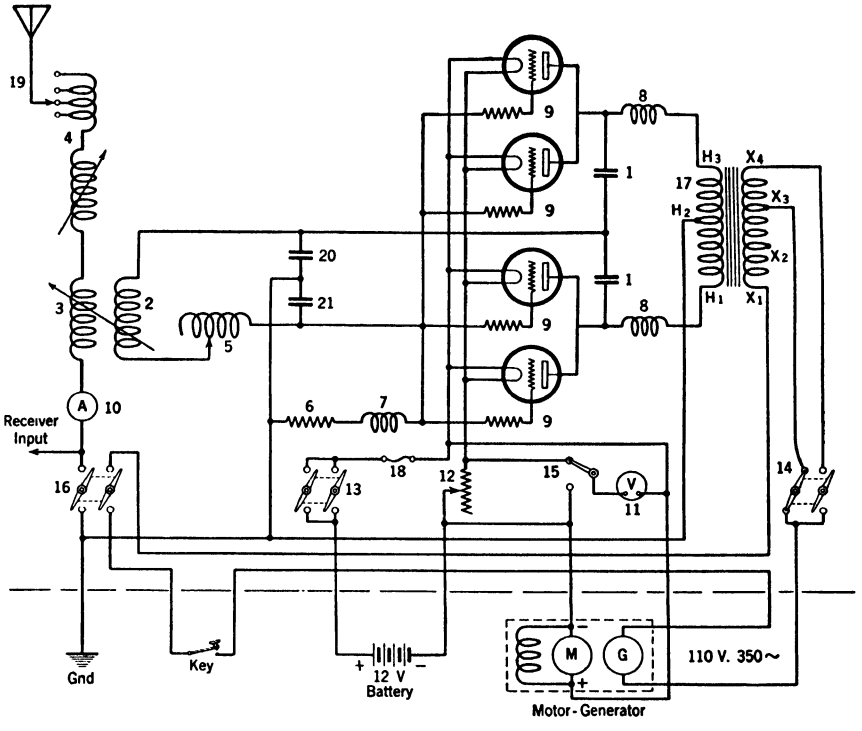

FIG. 372.—Schematic diagram of the ET-3650 telegraph transmitter.

1. Plate blocking capacitors, 0.002 mfd., 3000 V.
2. Tank coupling coil.
3. Antenna coupling coil.
4. Antenna variometer.
5. Oscillator tank coil.
6. Grid leak, 6000 ohms.
7. Grid choke coil.
8. Plate choke coils.
9. Grid parasitic resistors, 15 ohms.
10. Antenna ammeter, 0–5 amp. scale.
11. Filament voltmeter, 0–15 volt d-c. scale.
12. Filament rheostat, 15 ohms, 5-amp. capacity.
13. Motor control switch, double pole.
14. Power control switch, three-point type.
15. Filament voltmeter switch.
16. Send-receive switch, double pole.
17. Plate transformer.
18. Line fuse, 60 amp.

19. Wave change switch.
20. Plate tank capacitor, 0.004 mfd., 3000 V.
21. Grid tank capacitor, 0.01 mfd., 2000 V.

The transmitter proper is firmly bolted to the table by means of bolts which pass through the mounting holes in the base of the transmitter. The motor-generator set is mounted as close to the transmitter as convenience permits.

Theory of Operation.—Before considering in detail the procedure for adjusting the transmitter to any desired wavelength within its range, it is well to understand the theory of operation of the various circuits involved. Reference will be made to the schematic diagram of Fig. 372.

The circuit used is of the full-wave self-rectified, capacity-coupled type, inductively coupled to the antenna. A total of four UX-210 tubes as power oscillators are used, two on each half of the cycle.

The 350-cycle power is supplied to the plates of the tubes through the step-up transformer, labeled 17 on the schematic diagram. The plates are then capacity-coupled through capacitors, 1, to the tank circuit which is made up of capacitors 20 and 21. The inductances, 5 and 2, also make up part of the tank circuit. The grid leak circuit is made up of inductance 7 and resistance 6. The antenna system is inductively coupled to inductance 2 of the tank circuit by means of antenna coupling inductance 3. The antenna system is resonated to the tank circuit frequency by means of the variometer 4. A particular tap is selected on this variometer by means of the wave-change switch which also selects the tank circuit inductance tap. Resonance is indicated by means of antenna ammeter 10. The filaments of the tubes are adjusted by means of rheostat 12. The voltmeter 11 indicates the supply line voltage or the filament voltage. This line voltage should be 12 volts direct current. The filament voltmeter should indicate 7.5 volts for correct operation of the tube filaments. Switch 15 changes the voltmeter from the line to the filaments.

The set is keyed by means of an external key which closes the primary circuit of the plate transformer.

Switch 13 is a motor-starting switch which turns the power onto transmitter and starts the motor-generator set. Switch 14 is the "v" power control switch which changes the tap on the primary sformer 17 and thereby provides "high" or "low" value of ltage. No. 16 is the "send-receive" switch. Resistors 9 itic resistors mounted on the tube shelf and in series with e grids.

FIG. 3[illegible]

diagram is g[illegible]
and identified [illegible]

Adjustment of Transmitter.—The following procedure is recommended for adjusting the transmitter to any frequency within the band of 375 to 500 kc. First, remove the cover from the top and sides of the transmitter. This exposes all of the variable elements of the transmitter which are required in order to adjust the frequency to any desired value. It will be noted that a four-position wave-change switch is provided which permits the frequency of the transmitter to be rapidly changed from one definite value to another. For the purpose of simplicity, the adjustment to only one frequency will be explained, as the procedure for adjusting the transmitter to any other frequency will be the same.

First, select the highest frequency that the transmitter is to be operated on. Place the wave-change switch (Fig. 367) on position "A." Select flexible copper ribbon tap corresponding to the wave-change switch "A" position and place the terminal clip over a turn of the spiral wound inductance coil 5 located at the top of the transmitter. The first trial position must be approximated for the frequency desired. Next move the antenna coupling coil 3, located at the rear of the transmitter, as far to the right as possible; this reduces the coupling to the antenna for tank calibration. Power may now be placed on the transmitter and is done in the following manner: With the power control switch in the "Low" position, place the motor-starting switch in "Run" position. This operation supplies current to the filaments of the vacuum tubes and starts the motor-generator set. Now adjust the filament voltage to 7.5 volts by means of the filament rheostat 12 and close the telegraph key. The frequency at which the transmitter is oscillating can now be measured with a frequency meter, and if found to be high or too low, the transmitter should be shut down by placing the motor-starting switch in the "Off" position, after which the flexible connection on the spiral wound tank inductance should be relocated on another turn, or portion of turn, either increasing or decreasing the inductance used in the circuit, depending upon whether the frequency has to be decreased or increased. Now start the transmitter and measure the frequency again. Repeat this operation until the correct frequency is obtained.

Now to resonate the antenna circuit, select the flexible connection on the antenna variometer terminal board labeled *A* (which corresponds to the *A* position of the wave-change switch), and fasten to one of the taps on the antenna variometer labeled 1 to 5. When the proper tap is located, a maximum reading will be obtained on the antenna ammeter as the antenna variometer is rotated through the point for the frequency desired (or that of the transmitter

One or two trials of tap setting may be necessary before the correct tap on the antenna variometer is found which will place the resonant point within range of the variometer control brought out on the front of the transmitter. The antenna coupling may now be increased by moving the coil back toward the left. The position of the coil should be locked at a point just below (i.e., to the right), where the antenna current drops sharply when the antenna variometer is rotated through resonance.

Place the shield on the transmitter and again check the frequency by coupling the wavemeter to the antenna lead. If slightly high or low, raise the hinged top cover; to increase the frequency, the tank inductance in the flat spiral wound coil should be decreased a portion of a turn; to decrease the frequency the inductance should be increased. Place the top cover back in position and recheck the frequency. The effect of the shields and the position of the antenna coupling coil will affect the emitted frequency slightly, therefore this final adjustment is required in order to provide the exact frequency desired.

A similar procedure is followed to calibrate to the other frequencies which are selected by positions *B*, *C* and *D* of the wave-change switch. For each position of this switch, the corresponding antenna variometer tap should be connected, and the resonant position of the antenna variometer control itself, recorded for various frequency settings.

Always tune the transmitter with switch in "low" position and do not change to "high" position until the circuits are in resonance. The operator should be careful to shut down the transmitter before adjustments of any kind are made inside the set.

Periodical Installation and Maintenance of Transmitter.—The transmitter should be inspected periodically to make sure that all parts are operating in a satisfactory manner. The various connections should be kept tight and the switches operating smoothly. The bearings of the variometer should be lubricated occasionally with a light grade of oil.

CHAPTER XXII

SHORT WAVE TRANSMITTERS AND RECEIVERS

ALTHOUGH short wave transmitters are very simple in design, requiring but few parts, and are often operated on very low power as compared with long wave transmitters, it should not be thought that these small transmitters are inefficient in long distance communication. Operators of numerous short wave sets have successfully carried on transmissions over very long distances, often exceeding 3000 miles.

Before continuing with our discussion of transmitter circuits, let us relate about the theory which is [illegible] in scientific circles concerning the propagation of [illegible] phenomenon [illegible]. The theory we refer to is known as [illegible] and the location [illegible] which, in brief, assumes that [illegible] higher frequency [illegible] curvature of the earth, as the lon[illegible] upon the seasons [illegible] the short waves are reflected by som[illegible]

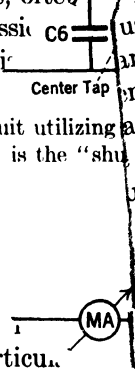

Theories Advanced Relating [illegible] Waves Through Space.—Experience proves [illegible] greater distances just after sundown and at [illegible] the daylight and also that waves emitted by a particu[illegible] change their apparent direction of travel and are heard in receiving sets with greater volume in certain localities than others. In certain areas reception from particular stations is quite impossible, as you would appreciate if you have had experience in operating a receiver in one of these areas, which are known as "dead-spots." However, in any location, even in those which are favorable for radio reception, there are times when a certain amount of periodic diminishing or fading of the signal energy is experienced, which among other peculiarities exhibited by a radio wave, is largely accounted for by the theories of propagation advanced by the eminent scientists, Heaviside and Kennelly. They suggested that a stratum of rarefied air exists about one hundred miles above the earth's surface, which region is electrically conductive because of its ionized condition. The height of the ceiling of this upper stratum rapidly changes as the sun's rays act to vary the density of the ionized condition. A low ceiling or ionized atmosphere tends to absorb the energy in a radio wave and it may disappear entirely after traveling a hundred miles, or even less, from the transmitting antenna.

The radio wave is thought to be composed of two components, one being a ground wave which travels along the curvature of the earth, and the second a sky wave, which is projected toward the upper ionized strata or *Heaviside Layer*. The sky wave is then reflected from the under surface of the ionized layer, the ceiling as it is called, at an angle toward the earth, this reflection being compared to light from a mirror. Just how this effect upon radio transmissions is thought to be brought about may be visualized as shown by the sketches in Figs. 285 and 286. There it can be seen how the wave of a certain radio signal could be absorbed practically a short distance from the transmitting antenna, yet the reflected sky wave might reach the earth at certain locations many hundreds of miles distant, thus accounting for long-distance reception.

The reflection of sky waves results in what is termed *the skipped distance effect*, and as a signal may be inaudible a few hundred miles from the transmitter and very strong several thousands of miles away. This phenomenon is followed to varies according to the wavelengths used, the time of day, positions B, C and of the transmitter. It becomes more noticeable at the switch, the coils, or lower waves, and is also dependent somewhat on, and the resonance and the power supplied to the transmitter.

In practice it has been recorded for various frequencies in the order of 12,000 to 16,000 kc. have given *position until* communication during all periods of the day and night. *Should to shut*, better results are experienced on certain frequency bands *inside the* owners during certain periods of the twenty-four hours and this requires changing the transmitting frequency according to the time of transmission.

The theories relating to the projection of an electromagnetic wave through space are intensely interesting, but they cannot be dealt with at length in this treatise, because we are more concerned just now in the fundamentals of short wave transmitting apparatus.

The types of circuits employed in short wave transmitters, in general, are quite similar to the familiar types of oscillator circuits, previously described. The principles governing the operation of an oscillator, as for instance the Hartley or Colpitts method for producing continuous oscillations (c.w.), have already been explained. Two popular types of coupled Hartley oscillator circuits used in short wave transmitters are shown in Figs. 373*a* and 373*b*. The diagram, Fig. 373*a*, illustrates the *shunt feed* type. Here the plate current does not flow through the tuned circuit inductance L_2, while coupling for feedback from the plate circuit is through condenser C_3. It is to be understood that only the a-c. component of the plate current passes through C_3.

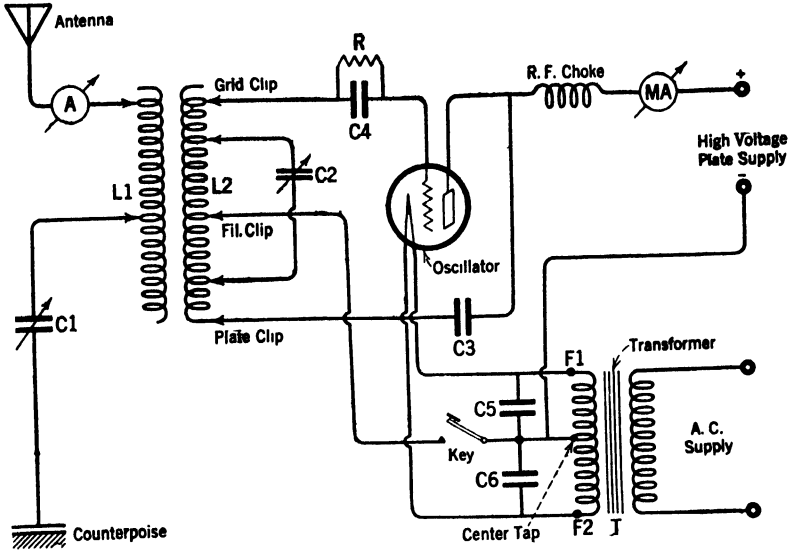

IG. 373*a*.—A short wave transmitting circuit utilizing the Hartley system for the generation of c.w. This circuit is the "shunt feed" type.

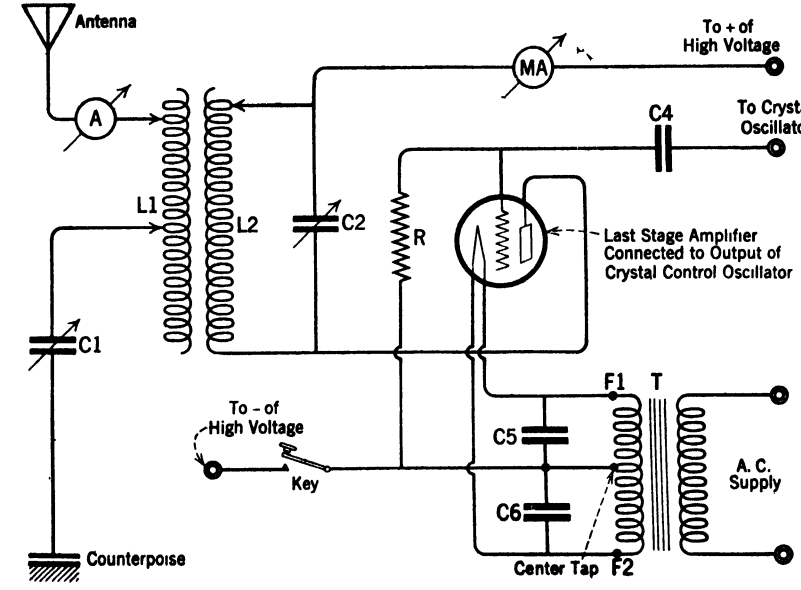

FIG. 373*b*.—A circuit arrangement of a typical short wave transmitter utilizing a crystal-controlled oscillator to stabilize the transmitter's frequency.

The diagram, Fig. 373*b*, is a *series feed* type. Notice here that the total plate current flows through the inductance L_2. This circuit is arranged to have its output frequency controlled by a quartz crystal oscillator; the tube circuit then functions to amplify the crystal's frequency.

The various elements embodied in the two circuits can be easily identified by the following legend:

L_1. Antenna inductance.
L_2. Oscillatory circuit (closed circuit) inductance.
A. Thermo-couple type radiation ammeter.
C_1. Antenna series condenser.
C_2. Variable tuning condenser in shunt to L_2.
C_3. Plate blocking condenser.
C_4. Grid condenser.
C_5. Filament by-pass condenser.
C_6. Filament by-pass condenser.
MA. D.C. milliammeter.
T. Step-down filament transformer.

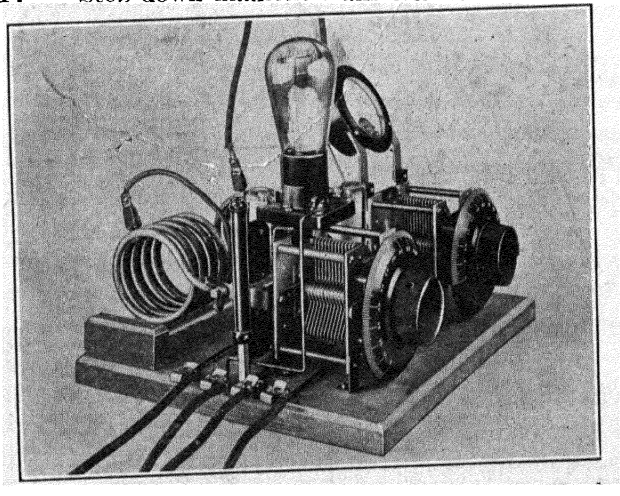

FIG. 374*a*.—Short wave amateur transmitter incorporating the Hartley circuit.—*Courtesy American Radio Relay League.*

The shunt feed Hartley circuit in Fig. 373*a* depends for its operation upon the voltage drop obtained from the inductances between the grid clip and filament clip when current flows. This voltage used to excite the grid is responsible for the persistent generation of continuous oscillations. Alternating current provides a very convenient means for supplying the filament, obtained from the use of a step-down transformer.

A rheostat (not shown) is usually inserted in the primary or input side of the transformer in order to regulate the terminal e.m.f. of the filament. This should be adjusted to within certain limits according to the characteristics of the tube used. Many installations use direct current for filament supply obtained from a storage battery. Suppose that battery supply is used instead of the a-c. in the shunt feed circuit shown in Fig. 373*a*, then it would be necessary to slightly modify the filament connections as follows: The lead marked F_1 would be run to the positive post of the battery, lead F_2 to the negative post, and the center tap lead to F_1, *i.e.*, to the positive side of the filament supply.

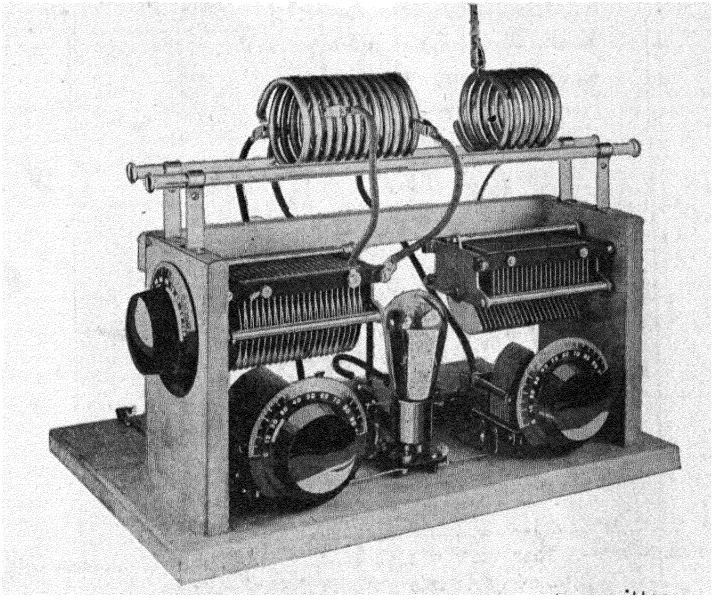

FIG. 374*b*.—Front view of short wave amateur transmitter.—*Courtesy American Radio Relay League.*

One method for keying short wave transmitters of the above type is to insert the sending key in the center-tap lead to the transformer secondary as indicated in the diagram. By placing a 1.0 mfd. condenser across the key contacts, arcing at the points will be practically absorbed, or if a condenser alone proves insufficient, a resistor of approximately 10,000 ohms should be put in series with the condenser. Other methods of keying commonly used are either to break the grid circuit, or to affect a change in the operating grid bias from a low value to a high value.

For short waves all of the apparatus should be designed expressly for the purpose to which it is put. Also, special attention should be

given to the mounting of the corelated parts with their circuit connections. The photographs in Figs. 374*a*, 374*b*, 374*c* and 374*d* show different views of the same transmitter designed for short waves. The mechanical relation of the parts and special features in design are clearly indicated in the photographs which are reproduced by the courtesy of "QST." In most types of sets, the transmitting inductances are constructed of either copper tubing or flat copper ribbon wire wound edgewise or flatwise, supported in certain cases by crystal glass spacers or some material possessing the highest insulating properties, or we might say a material having a high dielectric strength. A

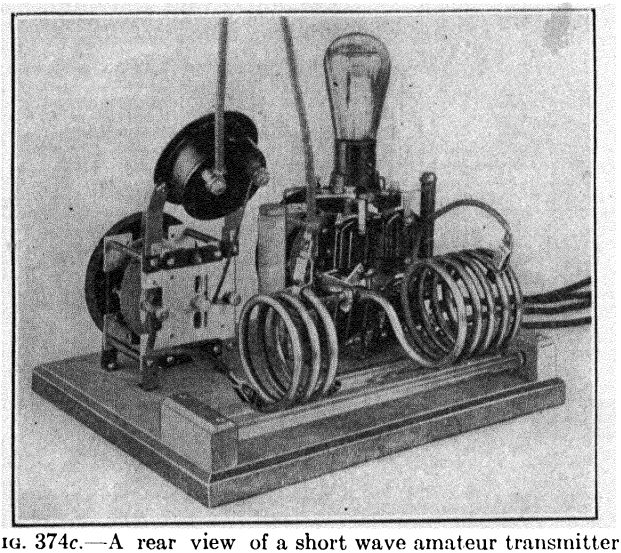

FIG. 374*c*.—A rear view of a short wave amateur transmitter.—*Courtesy American Radio Relay League.*

typical set of interchangeable coils for a short wave transmitter is shown in Fig. 374*e*.

The short wave spectrum is separated into channels, known as the 5-20-40-80 and 150 meter wave bands. The number of turns used and the size of the inductance correspond to the capacity which is shunted across them for the purpose of wavelength adjustment.

Condensers.—In general, short wave circuits are supplied with two variable condensers, one being usually shunted across the secondary inductance for obtaining the proper frequency, and the other shunted between the plate and the oscillatory circuit to control the feed-back voltage.

The transmitting condensers are ruggedly constructed, as can be seen in the photographs. Since reception of short wave signals is very

critical, the condensers used in the transmitter are carefully designed, so that they will be unaffected by atmospheric conditions which might tend to alter their capacity to a very slight degree, but sufficient possibly to vary the circuit constants and the frequency. So when once a transmitter has been tuned to the assigned frequency it should not be

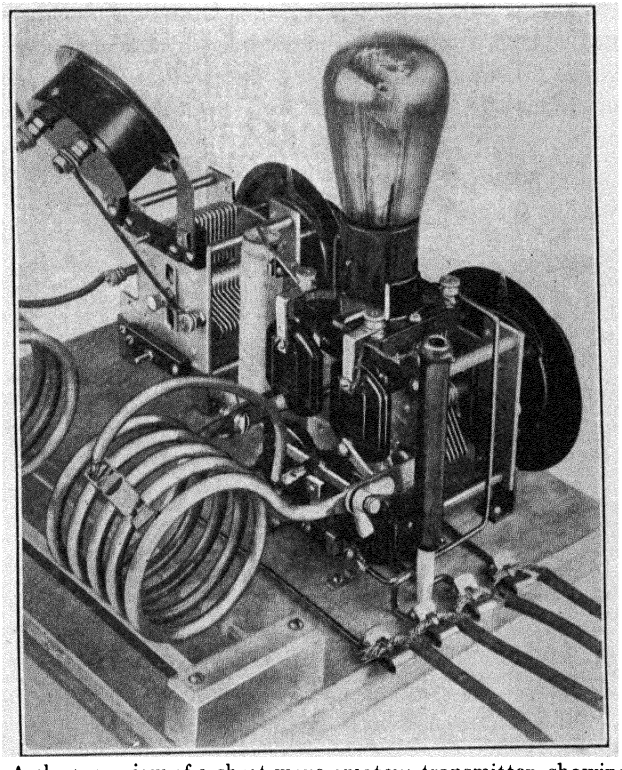

FIG. 374*d*.—A close-up view of a short wave amateur transmitter, showing the heavy leads and strong mechanical construction.—*Courtesy American Radio Relay League.*

permitted to "swing off" this frequency, if consistent communication is to be maintained.

These condensers have widely spaced plates which give them a very high breakdown potential. Remember that high voltages are applied to such condensers in many cases and that air is the dielectric medium. Breakdown potential (or breakdown voltage) varies for different condensers and run as high as 10,000 volts in some types and may still reach higher values. Thus, we learn that transmitting condensers are rated both according to their capacity and breakdown potential. To obtain the desired electrical and mechanical features the plates are accurately

spaced and made of heavy brass or aluminum. Also to reduce losses due to brush discharge all sharp edges and corners are smoothed or rounded off. By careful design of frame construction, stator plate and rotor plate assembly, creepage losses are kept to a minimum.

Short Wave Antennas.—Antennas used for short wave transmission should be located entirely out-of-doors, if surrounding conditions per-

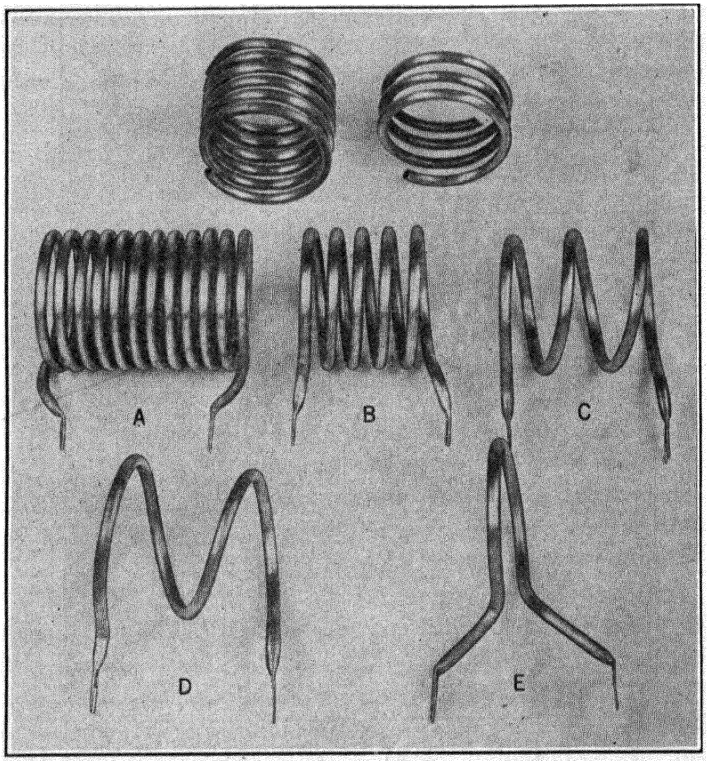

FIG. 374*c*.—Plate and antenna coils employed in a short wave transmitter. Coils A, B, C, D and E are used, respectively, for the 3500–4000 kc. (80 meter), 7000–7300 kc. (40 meter), 14,000–14,400 kc. (20 meter), 28,000–30,000 kc. (10 meter) and 56,000–60,000 kc. (5 meter) bands. The antenna coils are shown at the top.—*Courtesy American Radio Relay League.*

mit, or if the lead-in wire enters the building, the wire should be located in an unobstructed area, free from trees, metallic structures, or other energy-absorbing bodies. A counterpoise is often required, although not always, and its correct length and height from the ground must be found by experiment. In general, the antenna and counterpoise should be of the same length, this length representing the total amount of wire used

from one extreme end to the other, including the lead-in. To explain this point clearly we have drawn a simple sketch of an antenna of this type in Fig. 375*a*. If, for example, an antenna is designed for transmission on a certain wavelength in the 50 meter band, then the total length of either the antenna or counterpoise taken separately would be approximately 40 feet each, the individual lengths being indicated on the diagram by *A* and *C*.

Moreover, the third harmonic of an antenna may be utilized for transmission. Then, for transmission on the same wavelength in the 50 meter band, but utilizing a harmonic of the antenna, the antenna dimensions would require altering to give it a higher fundamental wavelength. The fundamental of the antenna required would have to be approximately 3×50, or 150 meters. In the case of the longer fundamental, or 150 meters, the individual lengths of wire forming the antenna and counterpoise should be approximately 115 feet. Thus, we can realize that there is a very critical relation between the length of wire used and the fundamental wavelength of any antenna system.

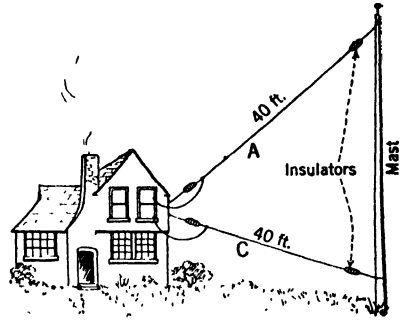

FIG. 375*a*.—A typical short wave antenna system employing a counterpoise.

The tuning of the transmitting inductance is accomplished in the same manner as for a long wave circuit. In tuning, the procedure is to first calibrate the closed or primary circuit to the designated frequency, this adjustment to be followed by tuning the antenna circuit. This is done by moving a flexible clip along the antenna inductance until maximum reading is indicated on the antenna ammeter. Adjustment of the antenna or open circuit may also be made by means of a variable condenser inserted in series with the antenna, providing, of course, that a condenser is incorporated in this circuit. A close and critical adjustment of the antenna to any desired frequency is possible with a series condenser. It will be recalled that a series condenser lowers the wavelength of an antenna below that of its fundamental or natural wavelength. In brief, what we do in work of this kind is to tune the closed circuit in resonance with the antenna by selecting the best combinations of inductance and capacity. If it becomes necessary, the variable condenser can be either short-circuited or otherwise eliminated from the antenna circuit.

Now the degree of coupling between the open and closed circuits is

a very important matter. The best coupling distance between the primary and secondary inductances exists when the coupling is not too close to cause a broad signal to be radiated and make the circuit unstable in operation.

One of the simplest and most efficient antennas used with short wave apparatus is known as the *Hertz* type. A general idea of a short wave vertical Hertz antenna may be had from the sketch in Fig. 375*b*. Observe how the antenna inductance as well as the other circuit ele-

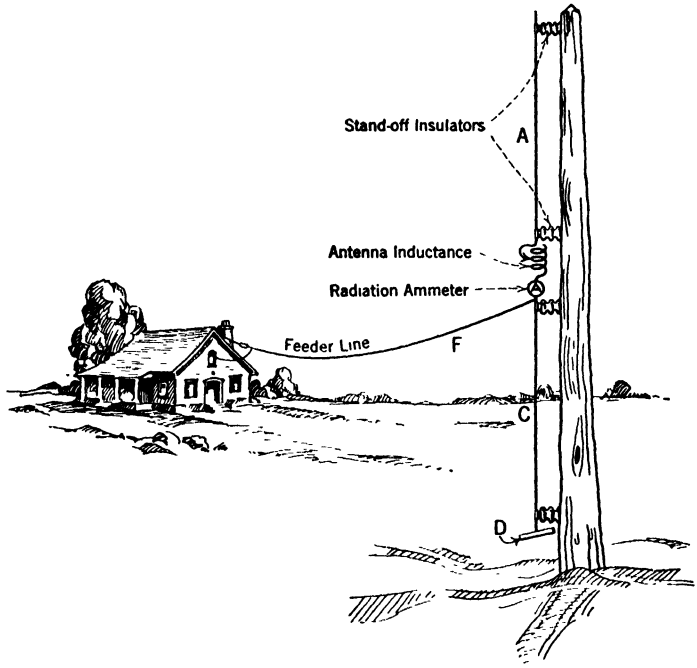

FIG. 375*b*.—One type of short wave antenna may be constructed in the manner suggested by this drawing.

ments, such as the radiation ammeter, the antenna and counterpoise conductors marked *A* and *C*, are mounted on the wooden mast by stand-off insulators. The inductance mounted on the mast is connected electrically to the inductance in the transmitter itself (which is housed in the building) by the long single wire *F* which is called a feeder wire. An ultra-high frequency choke is often inserted in series with the feeder line for the purpose of suppressing harmonic radiation. This feed-line method of coupling an antenna to the transmitter itself is generally adopted in large transmitters because it permits the antenna to be situated some distance away in a free, open, unobstructed place.

With this system the high-frequency oscillations produced in the oscillator circuit are carried through the feeder line to set the antenna into excitation.

Since there is no mutual inductance between the closed and open circuits with the feeder line method of coupling, the antenna circuit can be calibrated to its own frequency by variation of the antenna inductance until the maximum reading is observed on the antenna ammeter. Also, at the same time, the radio-frequency clip connecting the feeder line to the closed circuit inductance must be varied for a maximum output.

No direct ground connection is made to the lower section of counterpoise wire C, but, as shown in the drawing, the lowest point marked D is located several feet above the ground, this arrangement giving the effect of loading the circuit with additional capacity when necessary. The actual manner in which a short wave antenna is connected to a counterpoise must be determined by experimentation.

Conventional Type Short Wave Circuit.—The master-oscillator power-amplifier circuit illustrated in Fig. 376 will be used to describe a conventional type short wave transmitter. The theory of operation is as follows: The frequency of the generated oscillations is governed by the amounts of inductance used in L_3 and L_4 and the amount of capacity used in condenser C_3. The oscillator circuit is coupled to the grid of the power amplifier through coupling condenser C, the actual connection being made with clip G_1 attached to some location on the turns of the oscillator inductance L_3. By sliding clip G_2 along the grid coil L_4 the feed-back of energy from the plate necessary for promoting the generation of oscillations can be easily regulated. Observe that milliammeter MA is connected in the circuit so that only the plate current of the oscillator tube will be indicated. The amplifier circuit is tuned by adjusting inductance L_2 and variable condenser C_2. The correct positions for all tuning adjustments for the particular tubes being used in the transmitter are determined by observing the antenna ammeter A for maximum indications.

When the fundamental wavelength of the antenna is the same as the designated operating wavelength, then it will be found necessary only to tune the antenna with inductance L_1. However, for a wavelength lower than the fundamental it will be necessary to insert a variable condenser C_1 in series as previously suggested. This is done so that a decrease in inductance L_1 will not be required below a point where efficient coupling between the open and closed circuits would be normally obtained.

The feed-back from the plate coil L_3 to grid coil L_4 is brought about

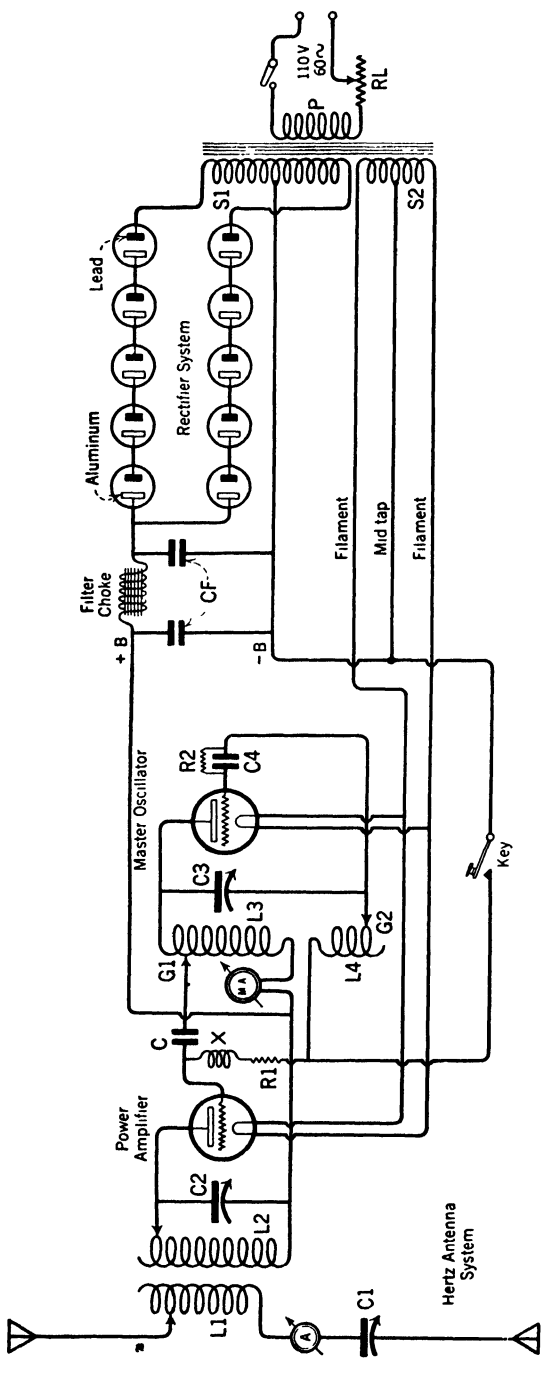

FIG. 376.—A circuit arrangement of a master oscillator-power amplifier short wave transmitter employing an electrolytic rectifier for supplying the operating voltages. Note that keying is accomplished by closing and opening the grid circuit.

by the changing magnetic field set up about L_3 which acts upon the turns of L_4. This method of transferring radio energy from one circuit to another is known as inductive coupling or magnetic coupling. A small radio-frequency choke coil, X, is inserted in the grid of the power-amplifier to suppress ultra-high frequencies. These parasitic currents are multiples of the fundamental or operating frequency and are usually set up whenever an oscillator tube circuit is coupled to a power-amplifier system. This choke also prevents any loss of high-frequency voltage and consequently the radio voltages generated in the transmitter are fully applied to the grid of the power-amplifier tube through the condenser C. The combination grid condenser C_4 and grid leak R_2

regulates the voltage of the oscillator grid. Condenser C acts as a blocking condenser to isolate the d-c. plate voltage from the grids of the tubes and acts to pass the r.f. energy from master oscillator to the power amplifier as just explained. A certain value of grid leak R_1 is selected so that the correct operating potential of the power-amplifier grid will be maintained at all times.

Briefly, the function of the oscillator tube working into a circuit containing inductance and capacity is to generate radio oscillations of constant amplitude at the frequency allocated to the transmitter by the Radio Commission. These oscillations are transferred from the output of the oscillator circuit to the grid of the power-amplifier through condenser C. The strength of the signal is boosted up because of the amplifying properties of the power tube. Coils L_1 and L_2 constitute the antenna coupling transformer. A circuit arrangement of this kind permits a much greater power to be delivered to the antenna than could be otherwise obtained by coupling the oscillator tube directly to the antenna. Furthermore, this system gives stable operation and good frequency control of the antenna output.

Inspection of the diagram shows that there are three oscillatory circuits which must be tuned to the same frequency. They are (1) the oscillator circuit L_3, L_4, C_3, (2) the closed tuned circuit L_2, C_2, and (3) the antenna circuit L_1, C_1. Because the losses occurring in a short wave transmitter are high, the adjustment of all of these circuits is very critical. The master-oscillator power-amplifier circuit will generate the steadiest signal, with the exception of one produced by a crystal-controlled transmitter. A circuit of this type is to be preferred where consistent communication is a requirement because antenna swinging has practically no effect on the frequency of the emitted signal.

One of several methods may be employed for keying the transmitter, such as breaking the grid circuit or changing the grid working voltage through an additional bias cut in by the key circuit. In the diagram, it is seen that the grid return circuits of both tubes are broken and the key inserted in series. When keying is accomplished by changing the grid biasing voltage from an operating voltage to a high blocking voltage, it is possible to key at high speeds.

Power to operate the tubes in the circuit just described is obtained from an electrolytic rectifier of the full-wave type. The rectifier supplies the requisite d-c. plate voltage from a 60-cycle, 110-volt a-c. source and operates as follows: The individual jars are assembled by immersing a strip of lead and one of aluminum, of equal size, in one pint of a saturated solution of borax and water. For each 75 volts output, one jar should be provided, and for each ampere supplied to the circuit,

the approximate area of the aluminum should be 8 square inches. Current will flow through the jar in only one direction after the cells or jars have been "formed."

It may be advisable to list the precautions necessary when "forming" a jar. The output of the rectifying jars is short-circuited, and a-c. is passed through it for one to two hours. During the earlier stages of this process, there is a direct short-circuit placed on the transformer which requires that one or two lamps of suitable size be placed in series with the primary circuit to act as a load. If the transformer shows a tendency to overheat, lower watt lamps should be substituted for the ones in use. The operation is considered complete when a dull white deposit appears on the aluminum plates, and at this period the protective lamps are removed from the primary circuit. After making the usual circuit connections the rectifier will function to deliver a direct current of the proper voltage to the tube circuits.

The full wave rectifier shown here is connected to a filter system consisting of a 30-henry choke coil and two large filter condensers marked on the diagram *CF*, each having a capacity of 4.0 mfd. The importance of a good filter system cannot be over-emphasized because considerable interference may be caused by a c.w. transmitter if its 60-cycle or motor-generator commutator frequency is permitted to modulate the output.

The secondary winding S_1 delivers the alternating current at high voltage to be rectified through the jars and, due to their one-way conductivity of current flow, a direct current is obtained from their output, which in turn is supplied to the plate circuits. The filaments are heated with alternating current furnished by the filament winding S_2 of the power transformer. The grid return lead in common with both tubes is connected to the center tap of this winding with the transmitting key inserted in series. The power furnished to the primary from the main a-c. supply is regulated through the line rheostat *RL*, this circuit being closed and opened through the main line switch.

Hertz Antenna.—The various short wave transmitting antennas in common use employ what is known as the *Hertz Antenna*. It is interesting to know that the Hertz antenna does not use any ground connection, and that it was the earliest type ever constructed for the express purpose of radio wave propagation. In later years Marconi conceived the idea of actually connecting the antenna to the earth.

A Hertz antenna may be set up either in vertical form, horizontal, or bent so that portions of it occupy both positions. Experiments have proven that in this type of antenna the distribution of current and voltage are non-uniform, this being due to the fact that there is always a

high radio-frequency voltage at the upper or antenna end, as well as at the lower or counterpoise end. At the electrical center of the antenna the current is highest when operating at the fundamental of the radiating system. If you were to test along the antenna circuit from point to point toward either end, beginning at the middle, less current and more voltage would be evidenced as the extreme far ends were approached.

A test such as we suggest here for determining the distribution of voltage can be performed easily by the use of a neon tube. This device consists of a glass tube containing a small quantity of the rare gas "neon." The principle upon which this testing device functions is that when the gas is acted upon by high-frequency waves in space (the radiations coming from any active antenna or electrical conductor acting in like manner), the gas is ionized. This breaking up of the gas atoms produces a beautiful purplish luminescence, called a glow. The tube is often called a glow tube. It is used in a practical way in automotive electrical work for checking up on imperfect operating high tension circuits connecting to the spark plugs. If the neon tube is held close to the high tension leads, and the circuit functions normally, electric waves will radiate from the wire and cause the tube to glow.

In testing an active Hertz antenna, by moving the tube along the conductors, points will be found where the tube glows brightest; these locations are the points where the highest voltages are generated. A few trials will soon indicate how far the tube must be held away from any live high-voltage wire conducting a-c. to obtain a satisfactory indication.

It is to be understood that tests of this kind can be made by utilizing meters instead of the glow tube. The reason for discussing this voltage and current distribution is based upon the fact that there are two methods for energizing an antenna of this type. These methods are known respectively as the "voltage feed system" and the "current feed system."

The voltage feed system employs but one wire, carrying a low current but a comparatively high voltage. A single feeder wire connects the transmitter circuit to the antenna as shown in Fig. 377*a*. When making adjustments to this circuit the feed wire should be connected to a point on the antenna where a current node exists, as for instance at point marked *X*.

The current feed system, on the other hand, employs two wires as illustrated in the elementary diagram in Fig. 377*b*. A large current at low voltage flows to the antenna from the output of the transformer, which in turn receives its excitation from the transmitter. This system

is used in many installations for exciting the antenna. It is used especially in high-power broadcasting stations of 50 kw. or more. In high-power work the two wires are strung on wooden poles leading to a large transformer installed in a weather-proof shed, and from this point the connecting leads are run to the antenna proper. This special construction permits the antenna system to be located in an unobstructed area at some remote distance from the transmitter.

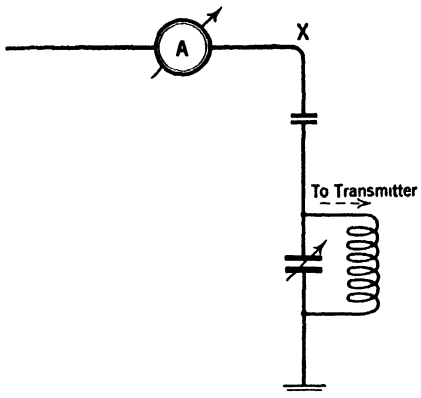

FIG. 377*a*.—One method of constructing an antenna for short wave transmission. This is known as the single wire voltage feed system.

The transfer of radio power from the closed to the open circuit is through the transformer referred to in the paragraph preceding. This provides inductive coupling, which is the method most familiar to us, in the ordinary coupling of high-frequency circuits. In Fig. 377*b* notice that the transformer secondary is connected directly to the center of the split antenna. An antenna which radiates several harmonics along with the fundamental frequency will have several nodal points (zero current points) distributed along its length. The indication at the nodal point of the fundamental or first harmonic is pronounced as would be evidenced by the brightness of the neon tube when used in a test. However, it would be noticed the nodal points of the second and high harmonics are located at different points along the antenna, and furthermore the nodal point of each harmonic would become less pronounced

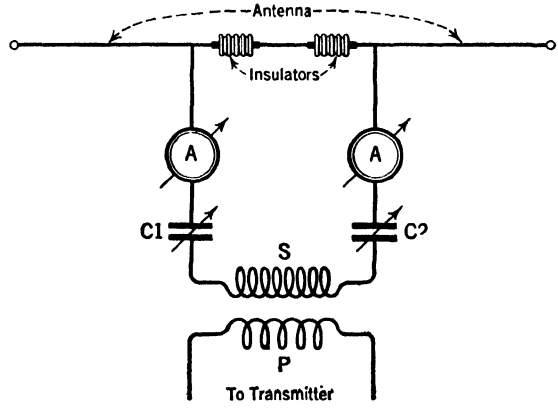

FIG. 377*b*.—Illustrating the principle of a Hertz antenna provided with a two-wire feed system. This type antenna is used extensively in short wave transmission.

as their frequency increased to higher orders, this phenomenon being visualized by the relative intensities of the glow of the neon tube. That is to say, the power or energy possessed by the fourth harmonic is less than that of the third, and the energy in the third is less than that of the second, and so on. This rule cannot always be followed, for there are isolated instances where the greatest power is not to be found in the fundamental, also called the first harmonic.

To clearly understand what is meant by a *nodal point* refer to the curve in Fig. 377*c*. In this curve the line XY is the zero axis on which an alternating current sine wave is represented. The sine wave shows that the points of zero current (or voltage) marked A, C, E and G are called nodes. Whereas the points of maximum amplitudes marked B, D and F are the anti-nodes or loops.

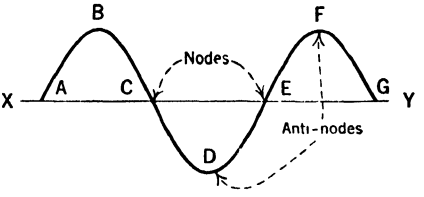

FIG. 377*c*.—A simplified manner of depicting the nodes and anti-nodes of high frequency oscillations.

Condensers C_1 and C_2 are sometimes inserted in series with each wire of a two-wire feed line in the manner shown in Fig. 377*b*. This is done in order that both wires may have equal field strength to equalize the effect of the magnetic field and reduce any radiation troubles. Also, a radiation ammeter may be supplied in either side of the antenna (or one in each side as shown in the drawing) and the meters will read alike if placed in the exact electrical center of the radiating system. A person without experience in short wave transmission is apt to be unsuccessful in the attempt to satisfactorily adjust a voltage feed (or single wire) Hertz antenna.

The peculiar properties exhibited by short waves and their persistence in covering long distances on low power has encouraged engineers to conduct exhaustive tests in this direction; they expect soon to be able to utilize the very short waves, as low as 5 meters or less, which involve the highest frequencies. Commercial short wave sets operate successfully down to about 16 meters.

Let us compare a 5 meter and a 4 meter wave. A 5 meter wave represents a frequency of approximately 60,000,000 cycles. Expressed in sub-multiples of the unit *cycle* this wavelength is 60,000 kilocycles, or 60 megacycles. Now, a 4 meter wave has a frequency of approximately 75,000,000 cycles or 75,000 kilocycles, or 75 megacycles. Working out a simple problem in subtraction shows that while there is a difference of only one meter in wavelength between the two waves, yet the frequency difference between them is 15,000,000 cycles. It is easy

to calculate how a great number of stations could operate within this one meter band, or its equivalent 15,000,000 cycles, if the use of the ultra short waves could be made a practicability.

Short Wave Transmitting Tube.—The UX-852 short wave tube is particularly suited for use as an oscillator or power amplifier in circuits designed for short wave transmission, especially at wavelengths under 100 meters, because of the tube's low internal capacity. Laboratory tests show that the grid to plate capacity is practically negligible, it being computed at 0.14 micromicrofarad. The tube has a power rating of 75 watts. A high electron emission is possible because of the *XL* filament used. It will oscillate with stability on 20 meters and under certain conditions at $\frac{7}{8}$ of a meter. With a slight reduction in output or rated plate voltage the tube may be operated as a crystal controlled oscillator. The limitations of the crystal make power reduction necessary.

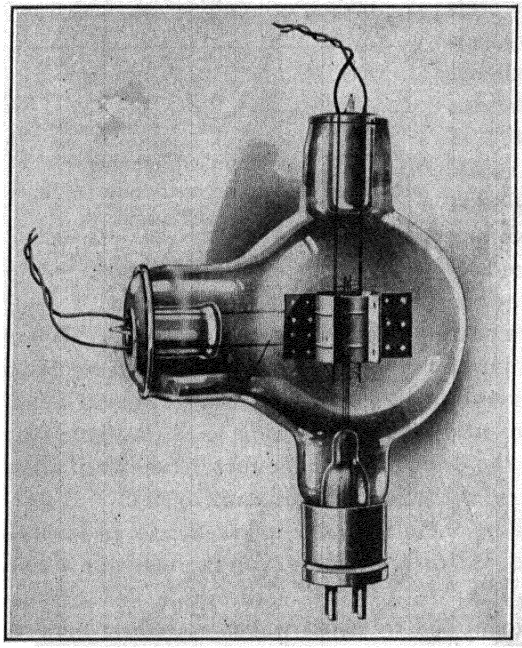

FIG. 378.—UX-852—75 watt short wave transmitting tube.

Damaging base flashes are prevented by the double-end or T-shaped construction of the glass envelope. The photograph, Fig. 378, clearly shows that each pair of electrodes are provided with two parallel leads for high current carrying capacity. It is imperative that pairs of leads be used always when making connections between the tube and the transmitter circuits. Alternating current should be supplied to the filament when possible. The plate and grid return leads should be connected to the electrical center (center tap) of the filament heating winding on the power transformer.

Inasmuch as it is quite impractical to measure the output of the tube at short wavelengths, its correct operation may be judged with sufficient accuracy by observing the plate. During calibration the

plate temperature should not be permitted to rise above a value which will cause it to heat to more than a cherry redness. A plate which is heated to this characteristic color is taken to be equivalent to dissipating approximately 100 watts, caused by the electron bombardment of the anode (plate).

Inductive or Magnetic Coupling.—Government regulations require the use of inductively coupled antenna circuits for the transmission of radio waves. One of the advantages of magnetic coupling is that it permits the use of loose coupling which sharpens or peaks the wave, thus decreasing interference with neighboring receiving sets. A sharp wave reduces losses because it concentrates more of the energy on the designated wavelength. One advantage of this type of coupling is the elimination of a series condenser, except in extreme cases when working on a wavelength below that of the fundamental of the antenna. Other advantages are: Harmonics of the oscillator can be suppressed more efficiently, and the so-called "key thump" can be reduced considerably. Also, a change from one wavelength to another may be made more conveniently without the necessity of locating the nodal point either at the filament connection or the grounded point. It may bear repeating that the nodal point is the center of a radiative oscillating system, such as an antenna, where the current is maximum and the radio-frequency voltage is zero.

Crystal Controlled Transmitter.—It was mentioned in the early part of this chapter that many short wave transmitters operated either for broadcasting or commercial telegraphic communication, or both, obtain their station's frequency by the use of a small quartz crystal. It is now firmly established that a quartz crystal will maintain stabilized frequency for a transmitter within very close limits. The Radio Commission at Washington has drawn up regulations which require that a station shall not waver from its assigned frequency by more than 500 cycles. To hold a circuit which is oscillating at a frequency of about, let us say, 3,000,000 cycles, to within a band not extending more than 500 cycles either side of this value is a matter which demands great engineering skill. It is obvious that in a case of this kind the percentage of efficiency required is unusually high.

Antenna swinging has practically no effect upon the steadiness of a signal in a crystal controlled transmitter, this being an essential feature when consistent communication must be carried on. An elementary diagram of a crystal controlled oscillator is given in Fig. 379*a*. The purpose of this circuit merely is to provide the designated frequency of the transmitter and the output of an amplifier which in turn feeds its power to the antenna.

Certain classes of high-power stations employ a 7.5 watt tube in the crystal controlled oscillator circuit, as shown in Fig. 379*b*. This tube's output is made to feed into a first-stage amplifier, consisting of a 50-watt tube. The latter tube in turn delivers its output energy to either a 250 watt or 1 kilowatt tube, and again, following this stage we may possibly find a final amplifier circuit containing one or more 20 kilowatt tubes. Thus a large radio power at a constant frequency is delivered to the antenna in this manner. The whole process is simply one of building up the power of a particular frequency through successive stages of amplification leading to the antenna.

Now examine the circuit in Fig. 379*a* which shows a typical crystal controlled oscillator. It is seen that the circuit consists of the crystal,

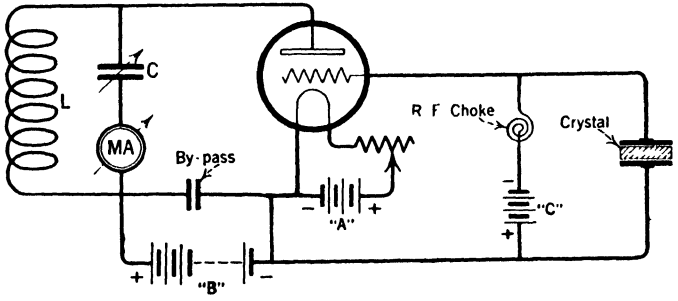

Fig. 379*a*.—One of several methods of utilizing a quartz crystal to control the frequency allocated to a transmitter.

a radio-frequency choke coil, a source of grid biasing voltage, the grid or input circuit of a 7.5 watt tube and the usual "A," "B" and "C" batteries.

Operation of the Circuit.—The circuit in Fig. 379*b* is purely schematic and is only intended to set forth the principles of coupling a crystal controlled oscillator to a series of stages of power amplification. Any one of several methods of coupling may be advantageously used between the various tubes, as for example, transformer coupling (this being the method employed in the circuit illustrated), impedance, or resistance coupling.

Notice that the inductance inserted in the plate circuit of the oscillator tube is shunted by a variable condenser which permits the circuit to be quickly tuned according to the crystal's natural frequency. When the set is in operation the selected frequency is transferred from inductance L_1 to L_2 by electromagnetic induction. The alternating e.m.f. set up in the circuit of L_2 C_2 is applied to the grid of the first stage amplifier, a 50-watt tube, and the influence of this charged grid upon the

electron stream in the tube causes the same frequency to be repeated in varying plate current passing through L_3. Again the selected frequency is communicated to a second stage of amplification, a 250-watt tube, this time through the action occurring between L_3 to L_4. The induced voltages in L_4, C_4, when impressed upon the second amplifier grid, causes the plate current in this tube's output to vary at the designated frequency through L_5. Now if a further increase in power is not desired, then L_5 may be loosely coupled (inductively) to the antenna through L_6.

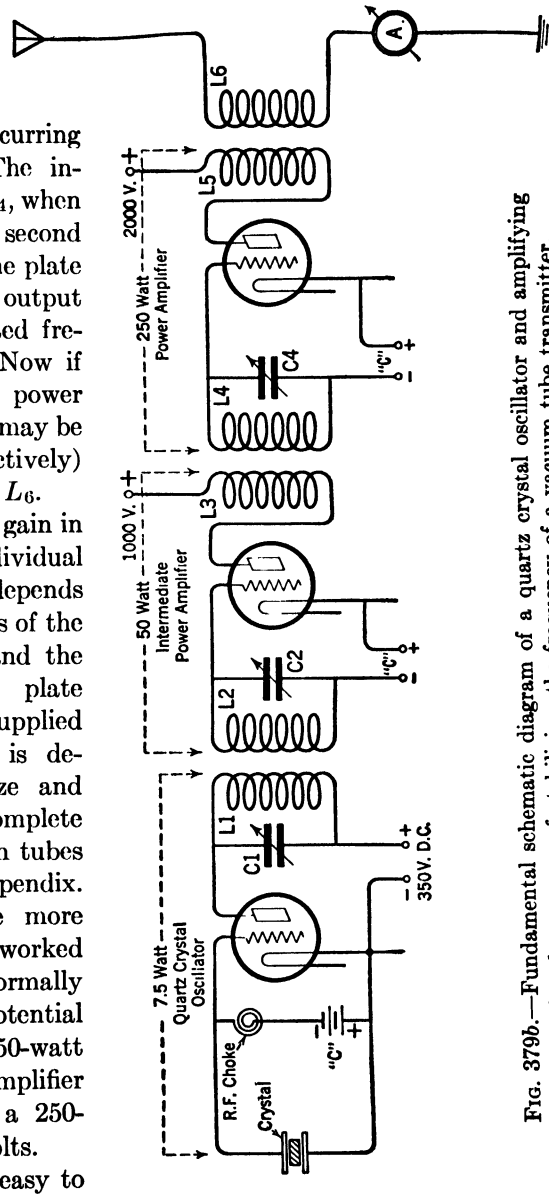

FIG. 379b.—Fundamental schematic diagram of a quartz crystal oscillator and amplifying stages for the purpose of stabilizing the frequency of a vacuum tube transmitter.

Remember that the gain in radio power for any individual stage of amplification depends upon the characteristics of the particular tube used and the power supplied. The plate and filament voltages supplied to the various tubes is determined by their size and rating. Charts giving complete specifications of vacuum tubes will be found in the Appendix. Let us mention once more that a 7.5 watt tube worked as an oscillator is normally supplied with a plate potential of about 350 volts, a 50-watt tube working as an amplifier with 1000 volts, and a 250-watt tube with 2000 volts.

It should now be easy to understand how a crystal oscillator associated with a vacuum tube can feed its output to a more powerful tube which, in turn, is coupled to the antenna, or the crystal oscillator and first amplifier may be coupled

directly to the antenna without any intermediate stage or stages of amplification.

Power also may be derived from a generator or from batteries. In low power sets a bank of high potential heavy-duty " B " batteries will give very efficient service over long periods. A storage " A " battery may be used for supplying the filament terminal e.m.f.

Rectifiers of the thermionic type (hot filament type) are often used for the power supply unit. A small filter consisting of chokes and condensers is then installed to smooth out the ripples in the rectified pulsations. A device of this kind can be designed to deliver sufficient direct current plate power as well as alternating current filament power from a special winding on the transformer for use with low power tubes of the UX-210 variety. This combination makes a very convenient source of e.m.f., for it is necessary only to plug the cord attached to the power transformer into the outlet of the 110-volt a-c. supply line.

Quartz Crystal Controlled Oscillator.—One of the greatest scientific developments of recent years founded on the oscillating properties of a quartz crystal has found a practical application in the frequency control of radio transmitters. A crystal can be utilized to control any r.f. system with reasonable output power. Although numerous circuit arrangements have been devised by which a crystal's output frequency may be made to ultimately set up oscillations of similar frequency in the antenna, yet after studying these circuits carefully we will find them quite alike fundamentally. Either the crystal-master oscillator circuit is coupled to a main power amplifier, with the latter circuit working into the antenna, or the transmitter may employ several intermediate stages of amplification between the crystal-oscillator and the main power amplifier. In every instance, though, the function of the amplifying stages is merely to build up the radio power progressively at the frequency dictated by the crystal's natural oscillation period.

When an electric circuit is formed by a conductor connecting two metal plates between which a crystal is placed, and the plates are then subjected to alternating mechanical impulses, the crystal generates corresponding alternating current. This effect by which a mechanical stress imposed upon natural minerals of this kind is capable of setting up a flow of electrical current was first discovered by P. and J. Curie, famed for their research work with radium. Moreover, it was found that the opposite effect could also be produced by the crystal; that is, when an electrical pressure (e.m.f.) of an alternating nature is impressed between the plates, it will cause a similar mechanical vibration in the crystal. It is evident then that a quartz crystal can be used for converting mechanical vibrations into electrical oscillations and vice versa.

We are forced to realize that nature is indeed a wonderful master over the materials and forces on our universe when we stop and think that in recent experiments scientists have been able to convert electrical current into sound waves solely with the aid of certain kinds of crystals. This phenomenon is apparent even though the plates or metal conducting sheets do not quite touch the respective faces of the crystal.

This peculiar property which a crystal exhibits has been given the name *piezoelectric*. Different kinds of crystals have piezoelectric properties, but they are not all suited mechanically for practical uses and, furthermore, they do not all have the same pronounced electrical properties as does the quartz crystal. Each piezoelectric crystal has a natural mechanical vibration peculiar to itself and the effects are strongest when an electrical oscillation is adjusted closely to the natural mechanical period of the crystal.

Recent laboratory experiments tend to bear out the fact that when a crystal is electrically charged it undergoes a succession of mechanical vibrations, or as some would say a *tremulous motion*. Its shape is distorted in this action and as quickly as possible the crystal seeks to resume its original physical shape, as when undisturbed or in a state of rest. It is while endeavoring to get back to normalcy, that is, to a normal condition of rest, that we say the crystal is *oscillating*. The mechanical vibration occurs at a tremendously fast rate, in the order of the radio-frequencies, if the crystal is cut and ground to a specified thickness. The oscillations set up in the electric circuit will reach maximum amplitudes when the frequency of the tuned circuit, consisting of inductance and capacity, is set close to the natural frequency of the crystal.

Thus, it is possible to connect an electron tube oscillatory circuit to a quartz crystal and control the frequency of the current circulating through the system. One method of connecting a piezoelectric oscillator (quartz crystal) to an oscillating tube circuit is shown in the diagram in Fig. 379*a*. It is to be understood that the crystal can be inserted either between the grid and plate or between the grid and filament. If the crystal is inserted between the grid and plate, the capacity of the filament to grid electrodes will be sufficient to provide the requisite feed-back path for oscillations. However, when the crystal is placed between the filament and grid, the capacity of the grid to plate electrodes provides the path through which energy is fed back from the plate circuit to the grid circuit. It will be recalled from previous reading about oscillator circuits that the reintroduction of voltage to the grid from the plate circuit maintains the tube and its associated circuits in a state capable of generating continuous oscillations.

The following is a brief account of the reasons generally advanced in scientific circles for the action of the crystal when working in conjunction with the vacuum tube oscillator. Refer again to the diagram in Fig. 379*a*. The circuit is placed in operation by adjustment of the filament voltage until a normal condition is reached, or we could otherwise say, until normal plate current flows. While the plate current builds up during the initial starting of the circuit it passes through inductance L, since L is connected in series. It is obvious that the plate current undergoes a rise through L. Undoubtedly there also occurs a momentary rush of energy toward the crystal, and although conduction current cannot pass through the crystal because of its high insulating properties, this rush or surge, nevertheless, places an electric charge upon the surfaces of the crystal. The electric charge in turn causes the crystal to vibrate mechanically. A vibration or oscillation once started will continue because the plate inductance L is connected by a variable condenser, and the circuit is otherwise arranged to become regenerative by the familiar method which utilizes the self-capacity of the tube elements for the purposes of feed-back as just mentioned. There must be, of course, the proper relation between the crystal's own natural frequency of vibration and the frequency or rate at which the first surge of energy changes in value in order to excite the crystal and cause it to move to its greatest limits.

Now let us summarize the action occurring in this circuit. The production of a high frequency current by this system is thought to be due to the following combined effects: (1) to the ordinary change of current when the circuit is placed in operation; (2) because of the tremulous or mechanical vibrating action of the crystal; and (3) by reason of the feed-back between the tube elements, sustained oscillations are generated.

In order to start a quartz crystal oscillating it may be necessary to vary the capacity of condenser C very slowly. The necessity for this preliminary adjustment may be accounted for by the use of an incorrect value of inductance, or perhaps the crystal itself lacks the necessary freedom to move.

A radio-frequency choke coil is inserted in the grid return lead to avoid any possible loss of radio-frequency voltage through the grid return circuit consisting of the " C " battery. In this manner maximum r.f. feed-back voltage is applied to the grid. The grid is biased with a " C " battery to keep the swing of the crystal controlling voltage over on the negative side of the grid-voltage-plate current characteristic. A maximum output will be obtained from the circuit when a minimum of grid current flows. When a negligible grid current flows, it means

that the grid is not blocked by a heavy negative charge that would act to reduce the plate current to zero, which is an undesirable condition. A small amount of plate current is necessary before a crystal circuit will start oscillating.

About Crystals and Crystal Holders.—It is necessary to subject a crystal to a change of some kind in order to start it oscillating. This may be done in one of several ways, as for example, an e.m.f. applied across the plates, or pressure applied to the plates, or even a change of temperature, will affect the crystal. A crystal usually begins to oscillate immediately when the circuit in which it is used is made operative, that is, when current builds up through an inductance in the plate circuit, or by varying the capacity of the tuned LC circuit, as shown in Fig. 379*a*. The values of inductance L and capacity C, as shown in this diagram, should be chosen to permit the crystal to oscillate at the desired frequency. If a 0-100-milliampere hot-wire meter is connected in the tuned circuit LC, it will give a deflection only when the crystal is oscillating, thus providing a good test indication. If the milliammeter is observed as the condenser is varied and the frequency of the tuned circuit approaches the natural period of the crystal, the deflection of the indicating needle will increase, but when the exact point of resonance with the crystal is reached it will be noticed that the needle dips and the reading falls to zero, because the tube then stops oscillating. It is for this reason that the oscillatory circuit associated with a crystal is always tuned to some frequency which is a little different from that of the natural frequency of the crystal.

Crystal holders are made so that when the crystal is mounted therein it will remain in one fixed position with respect to the sides of the holder. Only a very light spring pressure is applied to the top contact plate. Some crystals are mounted with a small intervening space between the upper contact plate and the crystal itself, but for reliable operation and maximum output, the upper contact plate should actually touch the surface of the crystal, though very lightly. Thus, a crystal used as an oscillator must be free to move when mounted between the two metal plates to which the voltage is applied. An air gap between the contact plate and upper surface of the crystal decreases the output, and sometimes causes the surface of the crystal to show a discoloration which, in turn, may cause it to heat and crack.

The holder in which the crystal is mounted should be hermetically sealed and maintained at a predetermined temperature. This may be done by placing the holder on a metal plate, which is maintained at a constant temperature. The heat will be conducted from this plate through the holder directly to the crystal. The holder also may be

placed in a compartment with a suitable heating apparatus and a thermostat to control the temperature, which, in some installations, is maintained at about 15° Centigrade. The importance of constant temperature control is apparent when we find that it requires only a change of 10° Centigrade to cause a change of frequency as much as 1 kilocycle (1000 cycles) in the very high frequency (short wavelength) range.

The Crystal and Its Care.—A crystal should be ground absolutely flat, with the surfaces parallel. If the thickness is not uniform, the crystal will not oscillate. The shape of a crystal is not important. It will function satisfactorily as long as it has uniform thickness and no scratches, blemishes, or chips on its flat surface. The thinner the crystal, the lower its fundamental wavelength; in other words, the oscillations in the vacuum tube circuits are produced at a very high frequency, proportional to the crystal's thickness, or approximately 105 meters wavelength per millimeter thickness of the crystal. When crystals are cut from a crystal slab, it will be found, in general, that three fundamental oscillations are possible. The reason for this is that the thickness of the crystal is very small in comparison to its other dimensions.

The several natural mechanical vibrations which are always present are thought to be due to a disarrangement of the molecules of the crystal. Any ordinary vacuum tube oscillator also generates a series of harmonics which are due principally to distortion produced by the tube circuit. It frequently happens that a crystal will not oscillate even when the faces appear to be parallel. A little grinding in a mixture of No. 301 powdered emery and kerosene will often bring back oscillations. This is done by pushing the crystal in a circular to and fro motion on a flat surface holding the grinding compound. This process, known as *lapping*, should be finished off by grinding in a mixture of No. 100 carborundum and oil, after which the crystal should be cleaned with carbon tetrachloride (pyrene liquid or Carbona). Fingerprints, dirt, or grease will cause the crystal to become inoperative. In this case it must be washed in the grease solvent. The grinding of a crystal requires great skill and should not be undertaken by one unacquainted with the work.

All of these interesting facts indicate the extreme sensitivity and peculiarities of the quartz crystal. Crystals are rapidly becoming standard equipment in both short and long wave vacuum tube transmitters. As can be seen by the schematic diagrams the circuits in themselves are simple, and experience proves that their operation is stable under the severe conditions met in radio communication.

Amplifying Harmonics of a Crystal for Short Wave Work.—When the plate-tuned circuit of a crystal oscillator tube is tuned slightly off resonance with the natural period of the crystal, the circuit generates several strong harmonics which are multiples of the fundamental. When it is desired to pick off a particular harmonic for exciting the grid of the power-amplifier tube, it is necessary only to adjust the grid-tuned circuit of the amplifier L_2C_2, Fig. 379*b*, to the same frequency as the harmonic.

A crystal which is not too thin is desirable for average operating conditions because it is less likely to break down and crack than very thin ones. The best arrangement is to employ a thicker crystal which has necessarily a higher natural period. For instance, the crystal control circuit in Fig. 379*b* may employ a 160-meter crystal. In this case the second harmonic is 80 meters, and the third harmonic 40 meters. When it is desired to send on the 80-meter wavelength, the power amplifier grid circuit L_2C_2 is tuned to 80 meters. On the other hand, if it is desired to send on 40 meters, the L_2C_2 circuit should then be tuned to this harmonic. From this arrangement it is seen that the power amplifier becomes a frequency changing device, and consequently it is known as a *harmonic amplifier*. In the case of the second harmonic, twice the input frequency is obtained from the output of the master oscillator.

Let it be assumed that the grid-tuned circuit L_2C_2 is adjusted to receive a maximum input from the second harmonic, 80 meters, produced by circuit L_1C_1. The output of the first power-amplifier tube is then resonated to 80 meters; in turn, the input circuit L_4C_4 of the following amplifier is tuned to resonance to 80 meters, and lastly, the antenna system is calibrated to operate on 80 meters.

The crystal-controlled circuit is very flexible and it is possible to operate with a crystal having a 160-meter natural period on any of its harmonics, as we have just explained. The individual circuits may be shielded to prevent the magnetic field of the coils from spreading out and inducing radio-frequency current in the component parts of the circuit. When shielding is employed, it is important that the coils be made small in order to prevent losses due to absorption by the shielding.

A summation of the foregoing facts relating to crystal-controlled oscillators indicates that the crystal dictates the frequency of the oscillations and the vacuum tube simply furnishes the power to drive the crystal. Crystals can be ground to give as high as 10,000,000 cycles (10 megacycles), or as low as approximately 25,000 cycles, or less, per second, but it is much simpler to employ a crystal having a lower frequency, as, for example, a frequency of about 2,000,000 cycles (2 mega-

cycles) and operate the amplifier circuits at one of the various individual harmonics. Of course, the exact frequency depends upon the frequency assigned to the transmitter.

It may be worthy to mention that the fundamental frequency of the crystal may be also referred to as "harmonic No. 1." "Harmonic No. 2" is exactly twice the frequency of the fundamental. "Harmonic No. 3" is exactly three times the frequency of the fundamental, and so on. In the case cited above, the amplifier circuit may be operated on the fifth harmonic, 10,000,000 cycles (30 meters), the fundamental of the crystal oscillator being 2,000,000 cycles (150 meters). Should it be desired to transmit on 30 meters or 10,000,000 cycles, a crystal having a fundamental of 2,000,000 cycles (150 meters) may be employed.

It is possible, under ordinary conditions, to find a dozen or more harmonic frequencies having sufficient power for practical application. It must be remembered, however, that the fundamental is usually the more powerful as suggested once before and, in progressive order, the other harmonics become less powerful.

Neutralizing.—When a crystal oscillator circuit is operated at the fundamental of the crystal, it is then necessary to neutralize the power-amplifier tube. This means that the grid to plate capacity within the tube must be so balanced out, giving the effect that it does not exist at all. This small capacity, if present, encourages the setting up of unwanted oscillations in the circuits resulting in erratic operation. These oscillations are better known as "self-oscillations." Inter-electrode capacity can be canceled or balanced out by connecting the grid of the amplifier, through a variable condenser, to some portion of the circuit inductance. The correct neutralizing voltage is obtained from the potential drop across the inductance when current flows. To actually eliminate the tube's capacity effect the neutralizing voltage must be equal to and opposite to the voltage resulting from the feed-back between the grid and plate electrodes. However, when one of the crystal's harmonics is utilized for the station's assigned frequency, then such a conventional neutralizing circuit is not quite so necessary, and in many cases not at all.

SHORT WAVE (HIGH FREQUENCY) RECEIVERS

The distances which high frequencies (short waves) carry when using relatively low power are almost unbelievable. Even during the daylight hours when transmission on long waves is not ordinarily good, and despite prevailing weather conditions, it is a fact that the high fre-

quencies will provide unusually reliable long-distance communication service. A very notable and valuable characteristic experienced in short wave reception is the almost complete freedom from interference set up by static. The same is not true when working on the higher wavelengths. The long-distance value of these short waves, the relatively low cost of transmitting equipment and maintenance, and the use of very simple receivers all contribute toward a new interest in radio transmission and reception that is at least equal to and perhaps greater than that which most of us experienced during the pioneer days of broadcasting.

In order that we may have a well-built structure upon which to base our future work in this field it is necessary that we not only study about the equipment and circuits themselves but we must also inform ourselves about the peculiarities of short wave propagation and their effectiveness. There is a generous amount of information to be had on this subject supplied from different sources, as for instance the data furnished by the U. S. Army, the U. S. Navy, the Naval Research Laboratory, the American Radio Relay League, the large commercial radio companies and the contributions of thousands of owners of amateur short wave stations.

In general the tuned circuits of short wave receiving sets are quite similar to the tuned circuits of short wave transmitters. Tuning is accomplished in either class of apparatus by altering the values of inductance and capacitance until the desired circuit constants are found at which radio oscillations of a particular frequency will circulate with maximum effectiveness through the circuits. Remember, all of our oscillatory circuits have a definite amount of inductance and capacity, hence they tune to a certain frequency.

Some short wave transmitters, depending of course upon the service they render, use only one wavelength. Consequently after a circuit has once been calibrated and checked by a wavemeter measurement, then usually the transmitter requires no further adjustment unless it wavers off its assigned frequency for any cause. If more than one wavelength is assigned to the transmitter, as would be the case in commercial work, then suitable clips and switching arrangements are provided to permit an instant change from one wave to another.

On the other hand, a receiving set must always permit quick and easy tuning over a wide band of frequencies. To meet the latter requirements a short wave receiver must be supplied with several plug-in or interchangeable inductances of various sizes, each coil being designed to encompass a limited frequency range. Also, there must be sufficient overlapping of frequencies at the extreme upper and lower limits of

different inductances to provide a progressive change in frequency without a break or interruption within the scope of the receiver.

A regenerative circuit is essential in short wave work. Two variable condensers are usually embodied in the design of present-day short wave receivers; the purpose of one condenser is to alter the capacitance of the tuned circuit and the other to regulate the amount of regeneration, *i.e.*, to control the amount of feed-back voltage supplied to the grid input circuit from the plate circuit. It is to be especially noted that the wavelength range that can be covered with a certain coil depends mainly upon the maximum capacity of the tuning condenser shunted across it.

Coil-condenser combinations of the plug-in type are coming into more general use; they consist of a separate tuning condenser employed with each inductance in the set. This feature makes it possible, when tuning, to utilize the entire dial scale for the frequency band covered by each inductance used. The practicability of using plug-in tuning condensers as well as plug-in inductances for receivers which at times must work in odd widths of the various frequency bands is quite obvious. This class of service demands that stations operating, let us say, several hundred cycles from each other must be separated in order to individually copy their signals. So, if a coil-condenser combination is used we can make each band spread across the full range of the dial.

Any one who is familiar with tuning, in general, knows that when a wavelength band is cramped within a short radius on the dial, using only a limited number of the available divisions, it simply lessens selectivity even when a precise vernier control is used. In other words, the value of this method rests in the fact that it gives full scale coverage for any band according to the inductance used, as we have just stated. It is not to be understood that a plug-in condenser is always necessary in a circuit arrangement to give satisfactory results; also the use of the last 10 divisions, or so, on the upper and lower limits of the condenser dial scale is not always necessary. Other requirements of short wave receivers in addition to selectiveness are the avoidance of hand-capacity effects, smooth regeneration control without appreciable variation of the tuning, and freedom from so-called "dead spots" where the circuit stops oscillating and the signal is lost. The trend of short wave receiver design is toward the development of efficient r.f. amplifiers that will operate with stability, meaning that the amplifiers will not break into self-oscillation, thus causing erratic results. The screen grid tube, type 222 (four element tube) is especially suited for use as an r.f. amplifier because of its inherent quality of canceling the effect of inter-electrode (grid to plate) capacity. It must be said, however, that r.f.

amplification in a short wave receiver does not always give a perceptible improvement in the distance covered. Moreover, an additional tuning control might be required for the r.f. amplifier circuit. An operator might find extra dials very inconvenient, especially when attempting to hold a distant transmitter whose frequency is wavering (or wobbling, as we more commonly refer to such a condition).

It frequently happens in practice that an operator is required to tune with one hand and copy a message with the other. On all but very distant stations, the receiver should be tuned by simply turning one tuning control. On very weak stations it might be found necessary to adjust the coupling between the antenna and grid coils to obtain maximum signal strength. For these reasons considerable attention is always given to the receiver design to make it simple in operation. A one or two stage audio-frequency amplifier may be used with a receiver of any type to build up weak signals. The transformers in such an audio system should provide uniform amplification of all frequencies in the audible range, but they must act to suppress high frequencies or losses would be sure to occur. In referring to the effectiveness of a transformer in readily passing a certain band of frequencies above or below the band we would simply say, "the transformer provides a sharp cut-off at both ends."

And now let us proceed to a brief discussion on the use of the condenser previously mentioned for regulating regeneration. By the correct adjustment of this condenser, known as a "throttle condenser," the receiving circuit may at one time be placed in a regenerative condition for the reception and amplification of a modulated signal, as, for instance, ACCW. Then by gradually increasing regeneration through careful manipulation of the throttle condenser the radio-frequency feedback voltage may be made sufficiently strong to cause the circuit to slide into oscillation and the set would then be capable of receiving continuous r.f. oscillations (c.w.).

The point at which oscillations begin is evidenced by a noticeable click in the phones or a simple test for oscillation is to touch the condenser stator plate with the finger; forming the contact should produce a click. In the study of "Regeneration" it was stated that when a receiver is generating r.f. oscillations within its own circuits and at the same time it receives a c.w. signal it will set up an audible beat current capable of actuating the telephone diaphragms. This production of a beat current is the result of the receiver oscillations combining with the incoming signal oscillations, providing of course that their frequency difference is in the audible range. Although two beat currents, one higher in frequency than the other, are actually produced by this inter-

action of high frequency oscillations, yet by intelligent use of the controls the circuit can be tuned to respond to either audio-frequency beat note. Naturally that beat frequency which provided the best readable note would be tuned to. In any circuit which is designed to generate the local radio-frequency and produce beats in this manner, the result is the heterodyne method of continuous wave reception.

Explaining briefly a major requirement of a short wave receiver it could be stated then that for phone or modulated cw. work the set should just be outside the oscillating condition where maximum amplification is obtained, and for cw. work the set should be just inside the oscillating point where stability of operation is assured.

The schematic diagrams in Figs. 380*a*, 380*b* and 380*c* show in a general way three methods for controlling regeneration in the detector circuit. The circuit in Fig. 380*a* is the familiar three-circuit tuner with the tickler coil controlling regeneration. A system of this type is quite impractical in short wave work because of the marked changes effected in the tuned grid circuit whenever the tickler coil is adjusted. The circuits in Figs. 380*b* and 380*c* both make use of a fixed tickler with regeneration governed by a variable condenser of small capacity. This is the throttle condenser, marked *CT*, shown connected between the plate of the detector and the tuned oscillatory circuit. The circuit in Fig. 380*b* is known as the shunt (parallel) plate feed type and is perhaps the one most widely used for the reception of high frequencies. In Fig. 380*c* we have the series plate feed type. There is a circuit in popular use which is quite similar in general arrangement to the one shown in Fig. 380*a*. The essential difference is that the tickler coil is fixed (not variable as shown in this diagram), and a variable resistance is inserted in series with the detector plate lead. Other means for controlling regeneration are embodied in the design of short wave sets, as for example by varying the heating current supplied to the filament. The desired changes in the filament terminal voltage are made by adjusting the filament rheostat. Or still another method is one which incorporates both a variable resistance in the plate lead and the throttle condenser connected in the circuit in the usual manner. This arrangement provides a combined resistance and capacity control of regeneration.

A short wave receiver must tune more sharply than would be necessary in the case of sets used exclusively for broadcast reception on waves above 200 meters. If a circuit does not tune sharply it is only natural to expect that when a certain station is being worked, then at the same time other stations will be heard, thus causing a more or less strong background of interference. Under some conditions a receiver

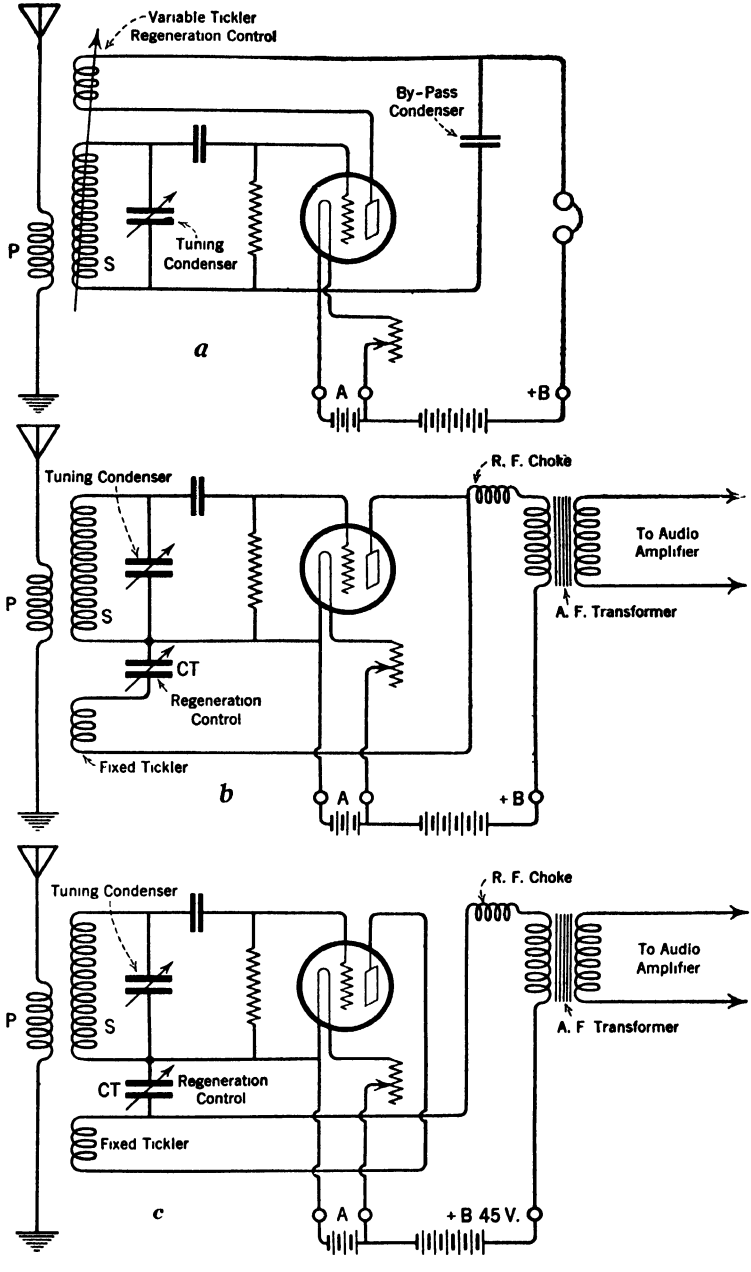

FIGS. 380*a*, 380*b* and 380*c*.—Three well-known types of regenerative receivers. Circuit (*a*) utilizes a variable tickler for regeneration control. Circuit (*b*) is the shunt (parallel) plate feed type with fixed tickler, with regeneration controlled by a variable (throttle) condenser. Circuit (*c*) is the series plate feed type also utilizing fixed tickler with regeneration controlled by a throttle condenser.

may be detuned slightly when interference is experienced, and although this procedure will result in a small sacrifice in signal volume on the desired station, yet the reduction in interference may in many cases allow a message to be easily copied by the operator.

It is seen that in short wave work we are interested both in the design and operation of a set in order to obtain maximum transfer of radio signal energy from the antenna system at *one* frequency and to place the set into a state of oscillation or regenerative amplification, at will, as determined by the character of the signals received.

The question is often asked "Where is the line of division between the short waves and the long waves?" To set a definite line of demarkation, insofar as we know, has not been attempted, it being generally understood that the short waves are those in the order of 200 meters and below, reaching down to still another range commonly known as the "ultra-short" waves, these latter being arbitrarily classified as waves of 5 meters and less. Some radio engineers engaged in short wave research do not consider waves above 100 meters as being strictly in the short wave band.

Long waves, then, may be considered as those extending from about 200 meters to approximately 24,000 meters. The very long waves are in use at the present time in trans-oceanic commercial work. The ultra-short waves have been utilized to a limited extent only within recent months. It is not to be understood that their use has reached a stage of perfected development. Extensive research and experimentation are now being conducted by the engineers of the government and commercial organizations to make the ultra-short waves useful for radio service. It seems almost beyond a doubt that the effectiveness of these waves will soon solve the problem of consistent long distance communication, day or night, and regardless of seasons or weather conditions.

In order to give an idea of the extraordinary high frequencies involved in the lowest wavelengths let us add that scientific investigators believe the ultra-short wave spectrum to be close to and merging into the heat wavelengths. This suggestion of the close proximity of radio waves and heat waves might have some influence upon observed phenomenon in regard to the concentration of radio energy, as, for example, in *beam transmission*. Here radio signals are directed in a narrow path, only a few degrees wide, toward a certain receiving station thousands of miles distant. A simple means for comparing different forms of energy when concentrated is found in the heat beam thrown out from the polished copper reflector of a type of electric house heater with which most of us are familiar. Present observations indicate that the possibilities of

utilizing the entire short wave band (or high frequency spectrum, which means the same thing) are limitless. Accordingly, as new transmissions are effected there will be a steady development in short wave receiving equipment to keep abreast of the demands.

In present-day radio parlance it is customary to speak of short wave lengths in their equivalent of kilocycles, or we simply say kc. (kc. being the abbreviation for kilocycles). The use of the unit, the meter (or wavelength in meters) is not now generally preferred. Often we find it more convenient to use a sub-multiple of the kilocycle, the *megacycle.* One megacycle equals 1,000,000 cycles. Simple calculations can be made to translate wavelength to frequency and vice versa by applying the well-known wavelength formula.

$$\text{Where wavelength } (\lambda \text{ lambda}) = \frac{300{,}000{,}000 \text{ meters (velocity)}}{\text{frequency (cycles)}}$$

It is a very easy matter to change frequency when expressed in cycles to either kilocycles or megacycles. In fact, it can be done without resorting to the use of pencil and paper. For example:

30,000,000 cycles = 30,000 kilocycles = 30 megacycles.
10,000,000 cycles = 10,000 kilocycles = 10 megacycles.

The following paragraphs will be devoted to a consideration of the effectiveness of short waves. It is evident in practice that the short waves do reach out and cover tremendous distances, but their great practical advantage is their effectiveness in establishing consistent communication during the daylight when communication would ordinarily be difficult when working on the long waves.

A glance at the following tabulation shows the remarkable persistence of the high-frequencies in getting signals through to their destina-

Frequency Band Kilocycles	Communication Range Average Distance		Frequency Band Kilocycles	Communication Range Average Distance	
	Day-Miles	Night-Miles		Day-Miles	Night-Miles
1500–2000	100	250	5700–6000	550	4000
2000–2250	125	300	6000–6150	600	5000+
2250–2750	150	500	6150–6675	800	5000+
2750–2850	150	550	6675–7300	1000	5000+
2850–3500	250	600	7300–8550	1200	5000+
3500–4000	300	1000	8550–8950	1500	5000+
4000–5500	450	2500	8950–9500	1800	5000+
5500–5700	500	3500			

tion during the daylight hours. We generally speak of the communication range as either "day miles" or "night miles," as the case may be. This performance data, presented before the Institute of Radio Engineers by Captain S. C. Hooper, U. S. N., gives the average results over a period of many months of investigation under all sorts of climatic conditions.

Although the peculiarities of the high frequencies are not fully understood, yet there has been sufficient handling of traffic in this field to enable station engineers to draw up working schedules which indicate just what frequencies are most likely to reach a distant receiver at certain hours. The communication range on short waves changes rapidly from minute to minute and hour to hour. It is not an uncommon occurrence to get signals through at a certain hour at a particular frequency and have them fade out entirely the following hour. Such a working schedule is simply an accurate record of transmission phenomenon giving the most effective frequency to be selected for stated hours. For instance, let us suppose that a sending station is working a distant receiver on about 16,000 kc. at 2 A.M. with a strong signal. Now if messages are still on file which must be transmitted the following hour, then both stations will automatically shift to some other frequency, perhaps 7300 kc., conforming to the schedule.

Short waves become reflected, refracted and polarized in transmission, resulting in what is commonly known as the *skip distance effect.* The peculiar behavior of the high frequencies is accounted for by the Heaviside layer theory, or it is more inclusive to say Heaviside-Kennelly layer theory, named after the investigators who developed the theory of ionization of the upper atmosphere by the action of the sun's rays. This theory has already been explained in the paragraphs on Short Wave Transmission.

The drawing in Fig. 381*a* illustrates the "skipped distance" features. This is a simple means of showing the various possible paths of the short waves as they depart from the transmitting antenna, reach the ionized layer, and are reflected to the earth at varying distances. Frequencies above 6000 kc. have a silent zone due to the "skipping" of the wave, at distances varying up to hundreds of miles in the daytime and even thousands of miles at night, depending on the frequency from the transmitting station. Because of the uncertain characteristics which the high frequencies are prone to display, the values given in the table are subject to deviation. The seasons, summer and winter, day and night, and differences in the height of the Heaviside layer all have their individual effects on transmission distance. The curves in Fig. 381*b* illustrate this. These curves are an approximation of the effective

midday sky wave for all seasons, a night sky wave for all seasons, a skip distance curve for summer midday and winter midnight, and an all-

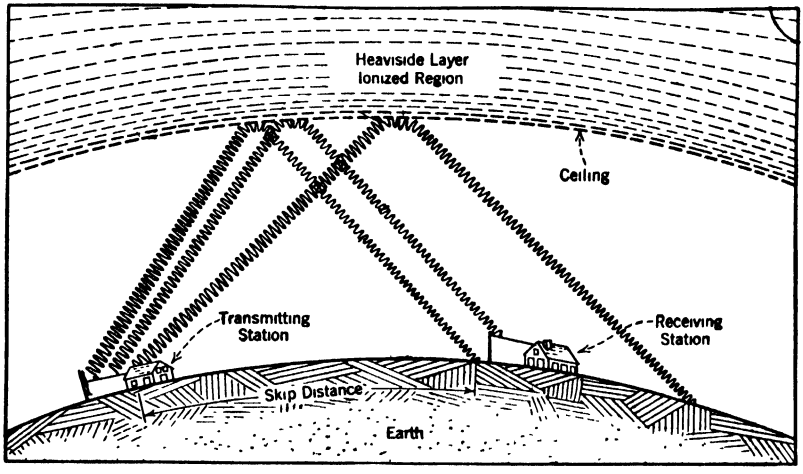

FIG. 381*a*.—Illustrating the "skipped distance" features accounted for by the Heaviside-Kennelly layer theory of the ionized condition of the upper atmosphere.

season ground wave for night and day. Curve 1 shows the approximate distance versus frequency for an all-season midday sky wave. Captain

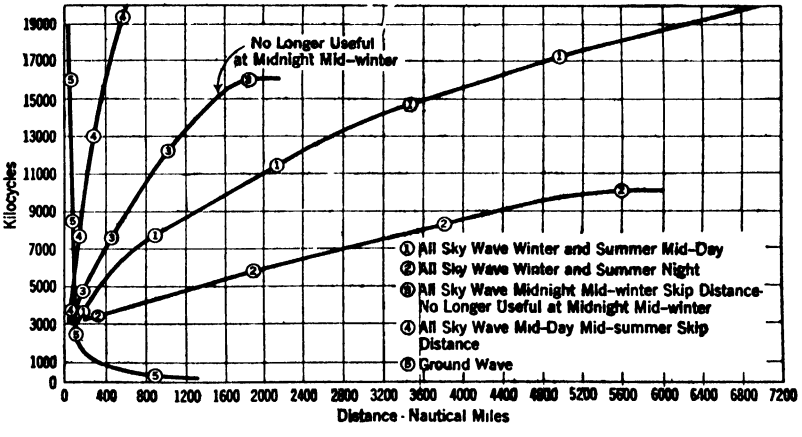

FIG. 381*b*.—These curves show the relative distances (communication range) that short waves of different frequencies may carry during the summer and winter months.

Hooper explained the use of the curves as follows: For example: Given a distance 2200 miles find the frequency to produce a good readable

signal at the receiving station. Vertically up from 2200 miles to Curve 1 and horizontally to the left, read 11,400 kc. Given a certain frequency the distance will be found by the reverse process. The frequency and the distance are approximately accurate when in an east-west direction, but the frequency and distance for north and south transmission may vary greatly from these figures.

The approximate distance versus frequency for the night sky wave at all seasons is illustrated by Curve 2. The curve is read in the same manner as explained above. To produce a good readable signal at a receiving station 2200 miles away when both the receiving and transmitting stations are in darkness, it is found that approximately 6000 kc. will suffice. Also it is probable that any frequency between Curve 1 and Curve 2 at 2200 miles will suffice and the choice of frequency depends upon the experiment and the time of day. Greater distances are covered by the lower frequencies at night, as shown by this curve. The frequency and distance for north and south transmission may vary somewhat from the above.

An approximation of skip distance versus frequency for midnight midwinter is given in Curve 3. The skip distance is measured horizontally to the right from Curve 5. The skip distance at any particular time of day or year may vary between the horizontal on Curves 3 and 4.

Skip distance versus frequency for midday midsummer is shown in Curve 4. The skip distance is measured horizontally to the right from Curve 5. Curves 3 and 4 are read in the same manner as described above. The last curve, No. 5, is an approximation of distance versus frequency of the ground wave at all seasons for night or day. The curve is to all intents and purposes a ground wave suitable for radio compass work. Night effect may be expected. This curve as shown is good for approximate day and night transmission. An increase of power may be required of the lower frequencies for the required distance.

Short Wave Receiver.—A diagram of a typical short wave receiver appears in Fig. 382. The inductances are fitted with plugs which provide electrical contact and also serve as a means for mounting them in the sockets. A short wave receiver is supplied with several sets of inductances of different sizes and by interchanging coils the receiver can be made to cover a very wide frequency band. Although the frequency range of each set of coils is large, yet the wavelength band is small, as may be ascertained by reference to the frequency-wavelength conversion chart in the Appendix.

The coils and other circuit elements require special care in their design and assembly in order that the receiver will behave in a consistent manner throughout the tuning range. The radio-frequency

losses in a receiver of this type are much greater than when dealing with receivers operating on the higher wavelengths. A short wave set should be capable of oscillating over its entire tuning range, that is to say, there should be no non-oscillating points throughout the frequency spectrum covered by the receiver.

The d-c. power supplied to a vacuum tube employed as a regenerative detector in a short wave receiver will be converted into an alternating current of high frequency (c.w.) in a manner exactly similar to that of any oscillator tube when the proper feed-back of plate energy into grid circuit is provided. There are several methods by which the

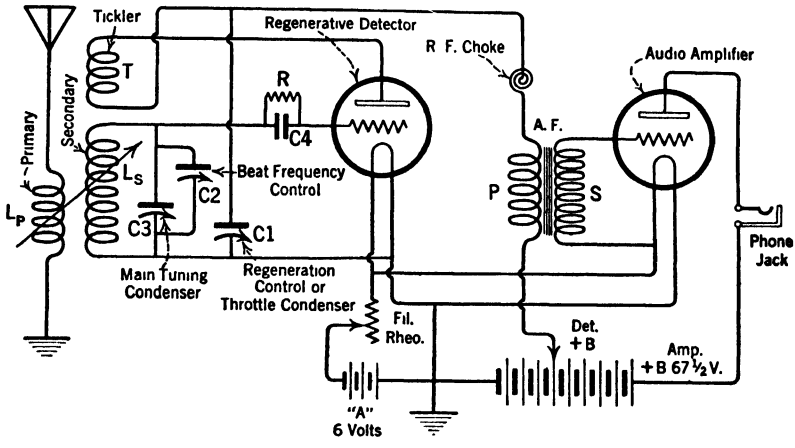

FIG. 382.—A typical short wave receiver circuit using plug-in inductances, fixed tickler coupling and a small variable condenser to control regeneration..

amount of feed-back voltage introduced into the grid circuit can be controlled, as previously mentioned, three of which are shown in Figs. 380*a*, 380*b* and 380*c*. This control of the plate output is essential in order to allow the receiver to be easily and gradually changed from an oscillating to a non-oscillating condition. The latter adjustment of the circuit permits the operator to obtain all of the advantages of regeneration for the purpose of amplifying short wave broadcast signals. On the other hand, the circuit should be maintained in an oscillating condition when continuous wave signals are to be received.

In the circuit illustrated in Fig. 382 the coupling is purely electromagnetic (inductive) between the antenna and secondary coils. There are certain types of receivers which employ a small coupling condenser. The magnetic coupling allows a maximum transfer of energy without affecting the wavelength calibration. By changing the coupling, greater

selectivity is possible and interference from outside induction noises is minimized. Harmonic tuning is also possible when using magnetic coupling by connecting a variable condenser in series with the antenna and coupling coils. There are several advantages to be gained by harmonic tuning as follows: One advantage is that a long antenna may be erected which increases the inductance of the circuit and this increase in the antenna's electrical length naturally permits a higher pick-up of signal strength. Also, the tuning-in of this energy can be accomplished at one of the antenna harmonics. The effect of harmonic tuning is most noticeable on wavelengths in which the fundamental or natural period of the antenna is some multiple of the wavelength of the signal received. Suppose that the natural period of an antenna, when connected to one of the plug-in antenna coupling coils, should be 300 meters, then in this case the second harmonic would be 150 meters, the third harmonic 100 meters, the fourth 75 meters, and so on.

Accordingly it is possible to adjust an antenna, by using a certain coil, so that one of its harmonics falls approximately on the wavelength of the station whose signals are desired. If we adjust the coupling of the antenna coil and secondary coil too close when tuning a short wave receiver it would most likely cause oscillations to cease at the different harmonics. If this should happen the circuit can again be set into oscillation by increasing the regeneration which in this circumstance would be done by slightly decreasing the coupling. It will be found that stronger signals are obtained at these resonant points than on other wavelengths in the tuning range. A good plan to follow when tuning a set is not to plug the antenna coil in its socket until after other adjustments have been made as we have outlined in subsequent paragraphs. There is practically one standard type of receiver used in short wave reception. It employs a fixed tickler system, and a variable condenser (throttle condenser) to control the amount of regeneration.

Placing a Short Wave Receiver in Operation and General Description.—The tuning and regeneration controls should be operated according to the suggestions given in the following paragraphs. These simple rules are applicable, in general, to any type of short wave receiver using a fixed tickler. Remember that efficient tuning comes only with practice. The best adjustments for receiving either telegraphic signals (code) or phone messages is a matter of experiment. A detector circuit consisting of a fixed tickler and a throttle condenser for regeneration control is used in our explanation. The schematic wiring diagram is given in Fig. 382. Smooth regeneration control is effected by changes in the throttle condenser's capacity while tuning is but slightly effected by this method. In brief the function of this condenser is to limit the

amount of radio-frequency current in the feed-back circuit, which is the same thing as saying that it limits the amount of regeneration.

Although the circuit shown in the diagram employs only one stage of a.f. amplification an additional stage may be added if desired; the connections then would follow the usual convention for such circuits.

The signal oscillations pass from the antenna system to the input circuit of the first tube by means of the mutual inductance (magnetic coupling) between antenna coil *Lp* and grid coil *Ls*. The grid coil and condensers C_2, C_3 comprise the tuned circuit and the r.f. voltage set up across the condenser is applied between grid and filament. The maximum capacity of C_3 is .00025 mfd.

Regeneration is made possible through the fixed coupling between plate coil *T* and grid coil *Ls*, but the actual amount of this regeneration is governed by the adjustment of the throttle condenser C_1. It is the function of this condenser to limit the amount of radio-frequency current in the feed-back circuit. Changing this condenser's capacity causes it to offer more or less opposition to the high frequencies. The condenser's opposition is technically known as its reactance (capacity reactance). So when it is said that a condenser offers more or less opposition to currents of different frequencies we could express this in terms of reactance. However, it should be borne in mind that this condenser adjustment is not critical and, when once set, the circuit should oscillate over the tuning range without difficulty.

The tube should go in and out of oscillation slowly, not abruptly, when changing from an oscillating to a non-oscillating condition. When a short wave receiver is first placed in operation both the wavelength and regeneration dials should be set at zero, followed by rotating the regeneration dial approximately one-third the distance across the dial scale until an indication of oscillation is heard in the telephone. A simple test which will indicate whether or not a receiver is oscillating is to touch the grid side of the secondary coil; if a click is heard in the telephones each time contact is made between your finger and condenser plate the receiver is oscillating. After reaching the critical point at which oscillation starts, the regeneration dial should be moved a few points higher for stable operation.

Now after the above tuning adjustments have been made, plug in the antenna coupling coil with the antenna connected to the receiver. With the antenna coil separated from the secondary coil by about 2 inches it may be found that the oscillations have stopped. In this case the regeneration dial should be again rotated a few degrees beyond this setting. If this is not sufficient to start the oscillations, a decrease of coupling between the antenna coil and secondary coil may be necessary.

With the receiver oscillating, it will no doubt be found that when moving the wavelength dial from zero to maximum, the receiver stops oscillating at various points, indicating that the secondary circuit is in resonance with either the fundamental frequency of the antenna circuit or one of its harmonics. It is possible that the wavelengths most frequently used by the operator may fall on one of the non-oscillating points, and if this occurs it will be necessary to alter the size of the antenna, either lengthening or shortening it to permit oscillation to be maintained again.

Reducing the coupling may also shift the non-oscillating dead points, but this in turn will decrease the signal strength. Also, by increasing regeneration to a higher point this undesirable condition may be overcome. In brief, there are two ways of shifting the dead spot to make the detector circuit oscillate over the entire range of the dial, either by inserting a coil or a condenser in series with the antenna, with a switch provided to cut these elements in or out as desired. Dead spots are often due to the use of inefficient choke coils in the detector plate lead. A choke coil with a very low impedance at certain frequencies in the short wave band will act as a short circuit for the tube's high frequency output and thus prevent the set oscillating. The obvious remedy in a case of this kind is the use of a good choke.

It may be necessary to alter the detector plate voltage, when interchanging plug-in inductances, for some require more voltage than others.

The short wave receiver illustrated in Fig. 382 shows the plate coil T magnetically coupled to the secondary coil Ls, both coils being in a fixed mechanical relation, thus providing the requisite feed-back energy from the output to the input, as previously stated. The coupling between antenna coil Lp and secondary coil Ls is inductive and variable. The grid-leak resistance should be comparatively high, otherwise squealing and howling may occur, and the circuit in general be made unstable in operation. The correct value is found experimentally. We might suggest that the values of leak resistances, in general, used for this work range from 2 to 10 megohms. Sometimes a leak resistance value of about 2 to 5 megohms will be found best while in other instances high values would be required.

The oscillatory circuit consists of the main tuning condenser C_3 shunted across the secondary coil Ls. A variable condenser C_2 of low capacitance is connected in shunt with C_3 to provide a vernier control for fine tuning. Although each plug-in coil covers a large frequency range, the small variable air condenser C_2 permits a close frequency variation which is called a " beat frequency control." The regeneration or throttle condenser C_1 connected between the filament and the tickler

coil is adjusted whenever an increase or decrease in regeneration is desired. It functions as follows: The regeneration control or throttle condenser C_1 should be held at a point where oscillations are just maintined when receiving c.w. or i.c.w. It will be found that the maximum response in the telephones will be received for a weak signal at this point, because, as set forth on the subject of "Regeneration," feeble currents are amplified in intensity a great many more times than a strong signal for the same adjustment of regeneration.

On the other hand, when it is desired to receive broadcasting, it is necessary to place the receiver in a non-oscillating condition, as previously stated. This can be done by adjusting the throttle condenser just below the point where oscillations are maintained, or at a point where the circuit is rendered incapable of producing oscillations, for this provides a maximum regeneration. In other words, the capacitance of C_1 is varied until its reactance or opposition to the radio-frequency component of the plate current is sufficient to prevent oscillations and yet allows only a limited amount of energy to pass through; just enough in order to give maximum regenerative amplification. Adjustment of the filament current by the filament rheostat provides another method for obtaining maximum regeneration. This receiver functions as a straight regenerative circuit with feed-back provided by the plate coil, when it is not oscillating.

One stage of audio-frequency amplification may be added to the short-wave receiver as suggested in the diagram, making it a two-tube receiver, consisting of a regenerative detector and audio amplifier. This circuit functions similarly to any audio-frequency amplifier in building up a signal of satisfactory volume. The action of the audio amplifier, briefly, is as follows: An alternating e.m.f. is induced in the secondary of the audio-frequency transformer AF due to the changing magnetism set up in the iron core by the varying audio current in primary coil P. The grid of the audio amplifier tube is charged with this signal voltage. In turn the signal is repeated in the plate circuit by variations in plate current; such variations must faithfully record the audio wave form and the frequency of the input energy to the grid. This is the action of all amplifiers. The changing magnetism in the phone windings caused by the fluctuating plate current in the amplifiers' output acts upon the diaphragms of the telephone receivers, causing them to vibrate. To prevent the amplifier circuit from breaking into self-oscillation it is suggested that approximately 67.5 volts or less of "B" battery voltage be used on the plates, and the filament voltage carefully adjusted.

A radio-frequency choke coil is shown inserted in series with the detector plate circuit to prevent losses of radio-frequency through the

leads connecting to the power supply. In some short wave receivers, the r.f. choke coil is replaced by a high resistance of approximately 25,000 ohms. A radio-frequency choke coil can be easily constructed by closely winding 110 turns of No. 40 DCC wire in a single layer on a tubing of insulating material 2 inches long.

Winding data for six sets of plug-in inductances are tabulated herewith in order to suggest the approximate size of wire and number of turns necessary for the coverage of given wavelength bands. The corresponding frequency range is also given. Only an approximation can be given because the tuning range is governed by the capacity of the tuning condenser used, as previously stated.

The range of wavelengths which certain coils will cover depends mainly upon the maximum capacity of the tuning condenser shunted across the coil. To give an idea of the wide variance in the relation between the capacity and coil versus wavelength band the paragraph following sets forth a few cases for comparison.

The inductances are made up in different forms according to the preferences of a designer. We have the solenoid type, sometimes referred to as the single layer wound, the basket weave type, etc. All coils are designed with the view of lowering their distributed capacity to prevent high frequency losses. Basket weave or Lorenze coils have a low distributed capacity, but there is a slightly smaller magnetic field built up around these coils on account of the space winding than is the case in layer wound coils. The main problem in dealing with short waves is to construct the apparatus so that the losses of high frequency are reduced to a minimum.

It should be remembered that the range of wavelengths which certain coils will cover depends upon the maximum capacity of the tuning condenser which is shunted across it.

Other refinements may be included, such as a movable tickler coil to be used principally for initial adjustments. The rotary condenser plates should connect to the filament side of the circuit in order to cut down the body capacity effect, and grounding of the filament circuit may be necessary in some cases.

The flat layer solenoid type of plug-in inductance is usually wound on notched rib forms, or narrow bars of high grade insulating material. The basket weave (Lorenze) type, previously mentioned, is a form of winding in wide use, its particular form gives it mechanical strength, and because it is self-supporting it requires only the use of an insulated bar to hold the terminal pins for making electrical connection to the jack plugs.

Some idea of this dependence of frequency range upon the size of a

coil and the capacitance associated with it can be obtained if a few examples are cited as follows: The values given are only with the understanding that they will differ when various types of coils are used in the receiver, as for example, the solenoid or single layer wound coil, basket weave and other popular types.

WIRE DATA FOR PLUG-IN INDUCTANCE COILS

Coil	Frequency Band Kilocycles	Corresponding Wavelength Band Meters	No. of Turns on the Tickler	No. of Turns on the Primary	No. of Turns on the Secondary
1	1,000– 2,150	300- 139	6	4	33
2	2,150 4,550	139– 65	4	3	18
3	4,550– 7,300	65 - 41	4	2	10
4	7,300–11,000	41 27	4	2	8
5	11,000 16,000	27– 17	4	2	6
6	16,000–20,000	17– 15	3	1	4

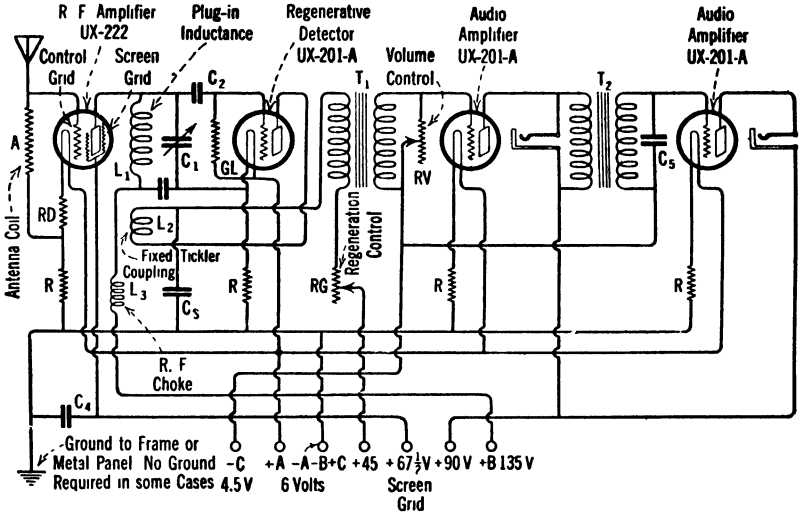

FIG. 383.--Showing a stage of r.f. amplification employing the screen grid tube preceding a regenerative detector and two stage audio amplifier for short wave reception.

An enameled No. 28 wire is used for the tickler and primary windings, and No. 20 wire for the secondary of all coils for which these particular data are applicable. The turns are space-wound to lower their distributed capacitance and are wound on a form 3 inches in diameter.

The receiving circuit just described is known as a regenerative detector circuit with one stage of audio amplification, and is practically standard for short wave work. A vacuum tube circuit used solely as a combined detector, oscillator and amplifier, is known generally as an "autodyne" circuit.

A schematic diagram and circuit constants of a four-tube set employing the screen grid tube in the r.f. stage is given in Fig. 383. The regenerative detector circuit is arranged similar to the circuit shown in Fig. 380*b*. The addition of a radio-frequency stage and two audio stages does not materially alter the principles involved in the use of the regenerative detector. Observe in Fig. 383 that a variable resistance inserted in series with the detector plate lead is utilized to effect control of regeneration.

Legend and Circuit Constants for Receiver Shown in Fig. 383

A. Antenna coil. The incoming signal current sets up a voltage drop across "A" which is applied between grid and filament of the r.f. amplifier. This coil is of the plug-in type, or a resistor of very high value may be used.

L1. Tuning inductance—plug-in type.

L2. Tickler Inductance—plug-in type.

L3. R.F. choke. A choke suitable for short wave work should range in inductance value from approximately 85 to 250 millihenries.

C1. Short wave variable tuning condenser—plug-in type optional. Generally called a midget condenser.

C2. Grid condenser—.0001 to .00015 mfd.

C3. Fixed by-pass condenser—2000 mmfd. (.002 mfd.).

C4. Fixed by-pass condenser—.003 mfd. (3000 mmfd.).

C5. Fixed by-pass condenser—.0005 mfd. (500 mmfd.) or .001 mfd. (1000 mmfd.).

RRRR. Filament ballast resistors of .25 ampere type used to automatically regulate the filament voltage. (This value depends upon the type of tube employed.)

RG. Regeneration control. Variable resistance 50,000 ohms.

RV. Volume control. Variable resistance 200,000 ohms.

RD. Biasing resistor of from 10 to 15 ohms. Furnishes a small bias to the control grid of the four-electrode tube UX-222.

GL. Grid leak resistance. From 2 to 10 megohms.

T1 & T2. Audio transformers.

A short wave set may be coupled to a special audio amplifying sys-

tem to work in conjunction with a televisor for the reception and reproduction of moving objects and scenes. It requires a broad band of frequencies to accomplish television, and for this class of service special channels must be allocated by the Radio Commission. The modulating frequencies used in this work may include in some instances a band between 80 to 500 kc. in width. In general the number of "dots" to each picture and the number of complete pictures transmitted each second determine the perfection of definition of the image reproduced by the receiving set.

Antenna.—An outdoor antenna of most any shape or dimensions will pick up sufficient energy to give good readable signals in the 20–40–80 meter and other short wave bands. A vertical antenna in many instances is not as efficient as one having both horizontal and vertical positions. Whenever local conditions permit it is a good plan to elevate the aerial wire as high as possible in a free unobstructed space, and clear of all energy absorbing bodies. The length of the wire is not critical and in most installations you would find that a wire from about 20 to 60 feet would prove sufficient for this purpose. A long antenna for short wave work is not necessary. Insulators having a high dielectric strength, such as glass insulators, reduce high-frequency losses and should be used at all points of support.

1-KW. High Frequency (Short Wave) Transmitter, RCA Model ET-3656.—This transmitter provides only for continuous wave (c.w.) telegraph communication. The oscillatory circuits are designed to cover a continuous wavelength range of 15 to 50 meters (20,000 to 6000 kc.). The output of the set works into a single wire antenna through an antenna coupling transformer. A combination of voltage and current feed system is employed, thus permitting either method to be used as required for antenna excitation. Views of this high frequency transmitter are given in Figs. 384, 385*a*, 385*b* and 385*c*.

The transmitter employs a total of six vacuum tubes operating in the circuit as shown in the schematic diagram, Fig. 386. The six tubes and their associated circuits perform the following functions: one UX-211 operates as a crystal-controlled master oscillator, one UX-860 as a frequency doubler, two similar type tubes also as frequency doublers and two UV-861 tubes as output radio amplifiers. The conventional type crystal-controlled master oscillator, intermediate amplifier, and main power amplifier circuits are so arranged that when in operation the quartz crystals are not subjected to excessive voltages which might possibly cause them to crack or break under a strain.

A description of the manner in which the tubes function is as follows: a UX-211, 50-watt tube, operating as an oscillator on only 500 volts

plate potential, supplies power to the quartz crystal, resulting in the tube's output frequency being controlled by the characteristics of the crystal. The radio-frequency current through the crystal is maintained at a very low value by the low plate voltage used on the tube, as previously mentioned. Several crystals are mounted in a temperature-controlled compartment in order to prevent a variation of the crystal's

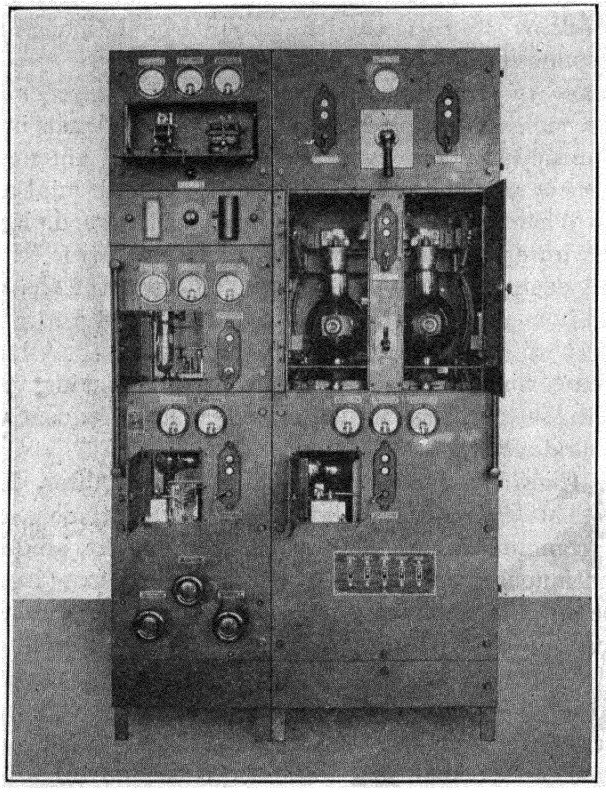

FIG. 384.—Model ET-3656.—1-kw. high frequency transmitter. Front view with doors open.

frequency due to changes in temperature. A switch allows any one of the crystals to be connected in the circuit. Note the heater element and the thermostat in the upper left of the diagram used to regulate the temperature. The output of the crystal-controlled tube circuit, consisting of an inductance, a variable capacitor and a radio-frequency meter are coupled through a fixed condenser to the input circuit of a UX-860 amplifier tube which is especially designed to double the input frequency. The output of this tube supplies grid excitation to the third

tube stage, which uses two UX-860 tubes connected in push-pull arrangement. The final high frequency of the transmitter is obtained in the intermediate stage by doubling the frequency twice in its output. Two UX-861 tubes are in the fourth amplifier stage, although only one tube is shown, and they increase the power of the high frequency energy received from the preceding two push-pull UX-860 tubes.

The practical operation of the transmitter requires that when the motor-generator is set into operation, and immediately after the armature reaches the full-running position, the filament voltages should be adjusted to provide their proper working potentials by means of the filament rheostat, which varies the voltage input to the filament heating transformer. The proper crystal is then selected for the frequency on which communication is to be maintained, after which the radio amplifier stages are tuned in succession for maximum output by means of a continuously variable inductance adjustment provided in each stage. The tubes should be operated on low plate voltage before the above resonance adjustments are made and after completion the plate voltage should be readjusted until maximum output in the antenna is obtained. The tuning adjustments are recorded on a tuning card in order to facilitate the placing of the controls in their proper positions for the desired transmitting frequency. The output power of the transmitter may be lowered to an amount less than the normal 1-kw. output by reducing the plate voltage supplied to the frequency doublers and output amplifier stages.

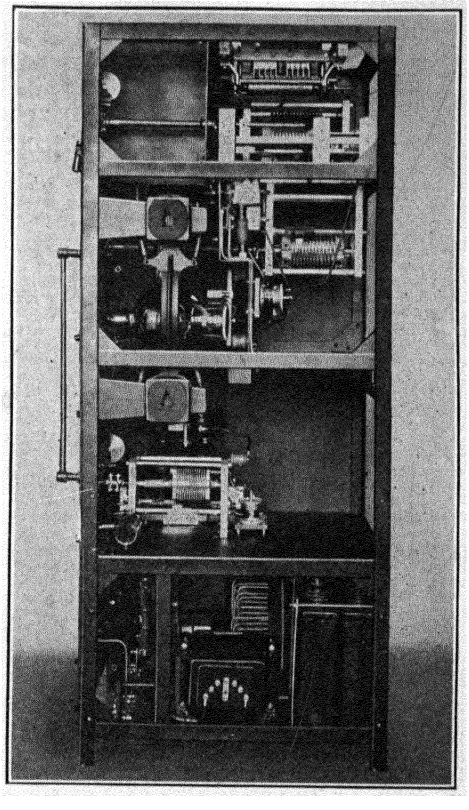

FIG. 385*a*.—1-kw. high frequency transmitter, RCA Model ET-3656. Right side view with shields removed.

The use of the four-element type vacuum tubes, UX-860 and UV-861,

in a short wave transmitter permits the amplifier circuits to be coupled in the usual manner without the need of neutralizing condensers. The self-capacity of the tubes is lowered to a negligible value because the fourth element becomes a shielded grid when impressed with a constant positive potential of correct value. The shielded grid acts as an electrostatic screen between the control grid and the plate, thus preventing the passage of uncontrolled high frequency energy through the tube.

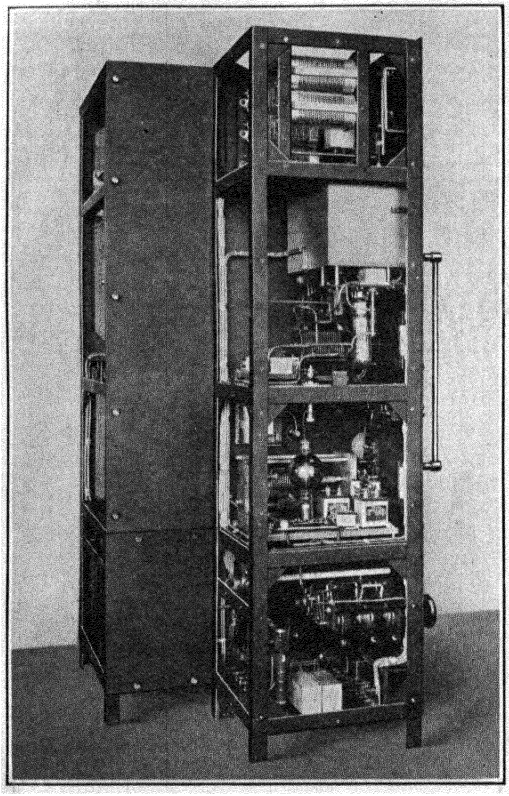

FIG. 385*b*.—Left side view of 1-kw. high frequency transmitter, Model ET-3656.

When the transmitter is keyed, the output of a small d-c. generator supplies a negative grid bias of the correct amount to be maintained on only the amplifier tubes. Key clicks caused by large surges of plate current are prevented by the application of this grid bias. Since only the output of the amplifiers is blocked when the sending key is up, whereas the oscillator continues to produce the high frequency energy, the frequency of the transmitter is not altered while keying. In order that the master oscillator plate current should not be affected in any way, the plate is energized from a separate d-c. generator coupled to the shaft of the main motor-generator set. The screen grid bias voltages for all tubes also is obtained from this separate generator.

The vacuum tube filaments are energized from two slip rings provided on the motor armature winding. The UV-861 filament requires 10 amperes and 11 volts impressed across the input terminals, while the UX-860 draws 3.25 amperes at 10 volts. The plate voltage to the UX-860 and UV-861 tubes is supplied from a 3000-volt double commutator generator. One winding on the armature generates 1500 volts

and will deliver approximately .4 ampere of direct current to the two UX-860 tubes and the two windings connected in series will deliver twice this voltage, or 3000 volts, to the plates of the UV-861 tubes which draw 1 ampere. A potentiometer is connected to the output of a second double commutator generator. This potentiometer serves as a voltage divider from which are taken the plate supply for the UX-211 crystal-controlled master oscillator and the bias voltages for the control grids of the UX-860 and UV-861 tubes.

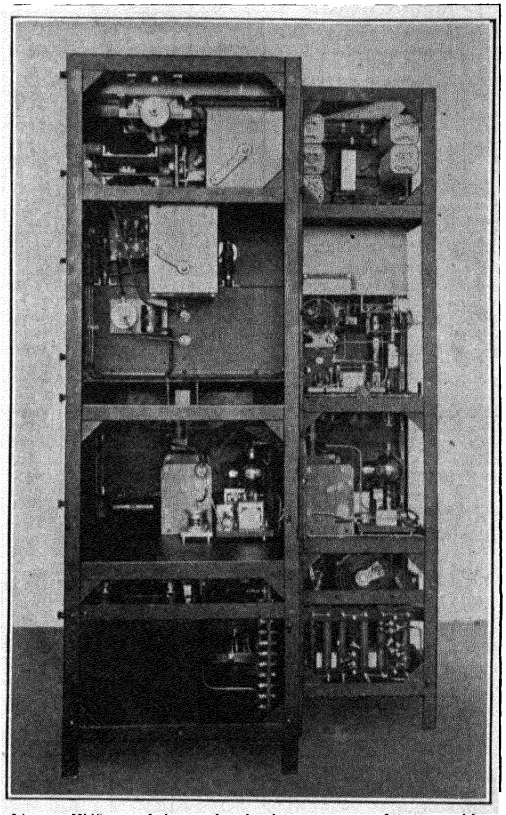

FIG. 385c.—1-kw. high frequency transmitter, Model ET-3656. Rear view with shields removed.

200-Watt High Frequency Radio Transmitter RCA Model ET-3655. This transmitter is designed for telegraphic communication on continuous waves with provisions made to operate on T.C.W. (tone c.w.), sometimes called intermittent continuous wave in commercial practice, whereas this energy is actually a continuous wave modulated at tone frequency. A diagram of the transmitter unit is shown in Fig. 387. When suitable connections are made between a radio telephone unit and the main transmitter unit, any of the different forms of transmission may be employed. The transmitter operates on four wavelength bands covering a continuous range of 26 to 150 meters. The bands are divided to include waves between 26 and 36 meters, 36 and 50, 50 and 90 and 90 and 150. The master oscillator-power amplifier type circuit is used, feeding into a Hertzian antenna.

The main transmitter utilizes four vacuum tubes, one UX-860 as a master oscillator, two UX-860 tubes as power amplifiers and one UX-860 as an audio oscillator. The last tube functions as an audio-

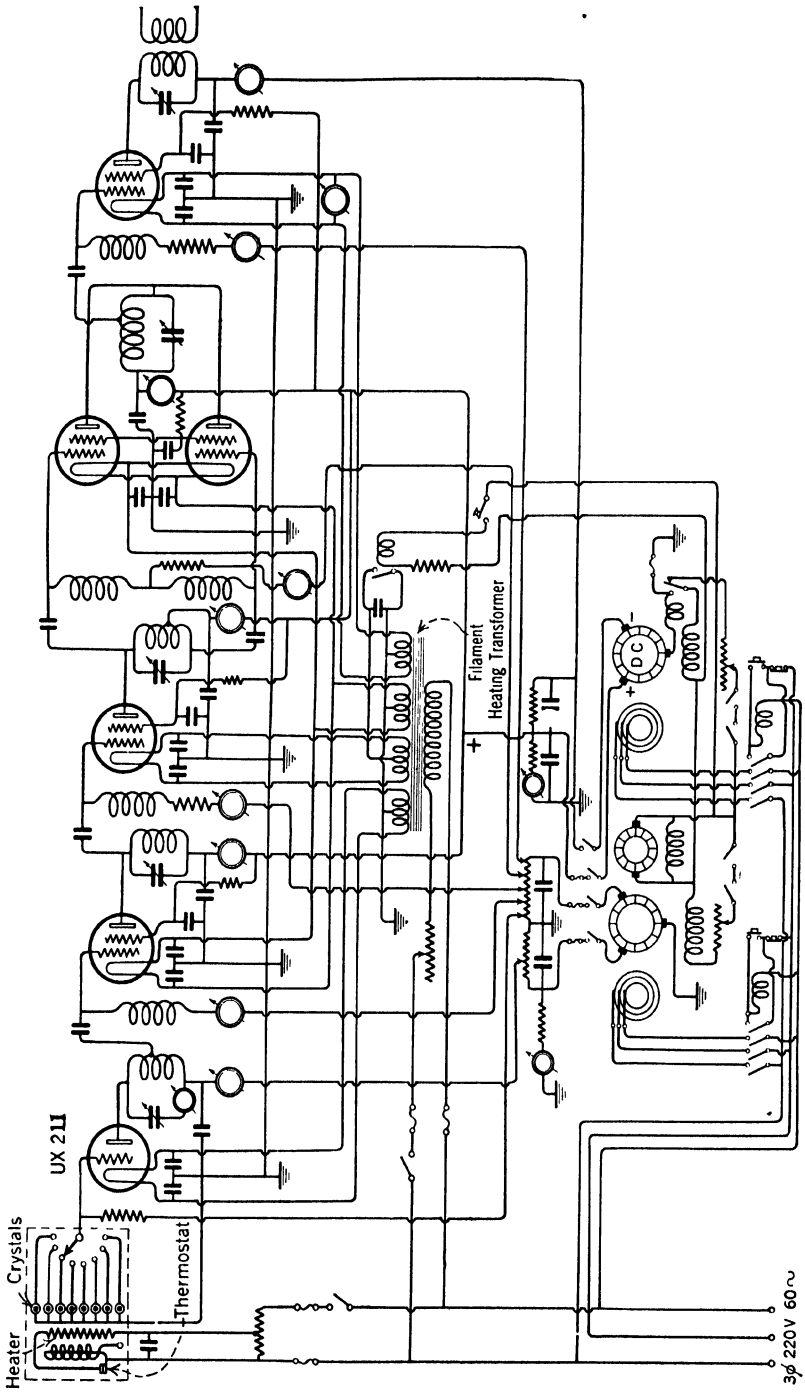

FIG. 386.—The schematic wiring diagram of Model ET-3656 one kw. high frequency (short wave) crystal-controlled tube transmitter. This set employs the screen grid type tubes in the amplifier circuits.

frequency generator which modulates the carrier frequency of the master oscillator when T.C.W. transmission is desired. Slip rings provided on the motor armature winding supply 200 watts a-c. power for heating the tube filaments through the low voltage winding on the filament transformer T, the filament terminal voltage being controlled by the rheostat R.

Operation of the Transmitter.—The variable condenser marked C_1 tunes the master oscillator circuit to the desired carrier frequency. This circuit can be modified to operate either as a radio amplifier or frequency multiplier to permit the use of crystal control. The need for any form of neutralizing is eliminated whenever the screen grid type UX-860 tube is employed. The fourth element or screen grid is supplied with a positive electric potential which serves to reduce the inter-electrode (plate to grid) capacity of the tube to a negligible value. The undesirable effects known as *wobbling* or *frequency instability* are practically reduced to a minimum by the use of the four-element tube. The master oscillator circuit feeds its carrier frequency to the two UX-860 tubes connected in parallel and their output works into the Hertzian antenna. The coupling effects due to the common connections of master oscillator and power amplifier are canceled by inserting a combination of resistance and impedance in series with the voltage supply leads connecting to the screened grid elements of the tubes. There are two sets of resistances and impedances connected in the screen grid leads, each set being marked R_1 and L.

The power amplifier tuned circuit consists of inductance L and two variable condensers C and C. The capacitance of these condensers is varied simultaneously because their rotor plates are attached to the same shaft. Condenser C_2 serves as a coupling condenser permitting the passage of the radio-frequency component of both power amplifiers' plate current to the tuned circuit just mentioned.

Modulated wave signals or T.C.W. can be transmitted by placing the signal selector switch in the T.C.W. position, which closes the filament circuit of the audio oscillator and hence an audio-frequency is obtained. Various audio-frequencies are possible by simply varying the capacity of the audio oscillator circuit. This is accomplished by placing the switch marked in the diagram "Audio Tone Frequency Switch" in one of three positions, and in this manner the audio oscillator grid bias is altered at either a 500, 700, or 1000-cycle rate.

The potentiometer connected across the high voltage terminals, positive ($+ \mathit{IV}$) and negative ($- \mathit{IV}$) of the d-c. generator, is used as a voltage divider, and from it all of the screen grid and bias voltages are obtained.

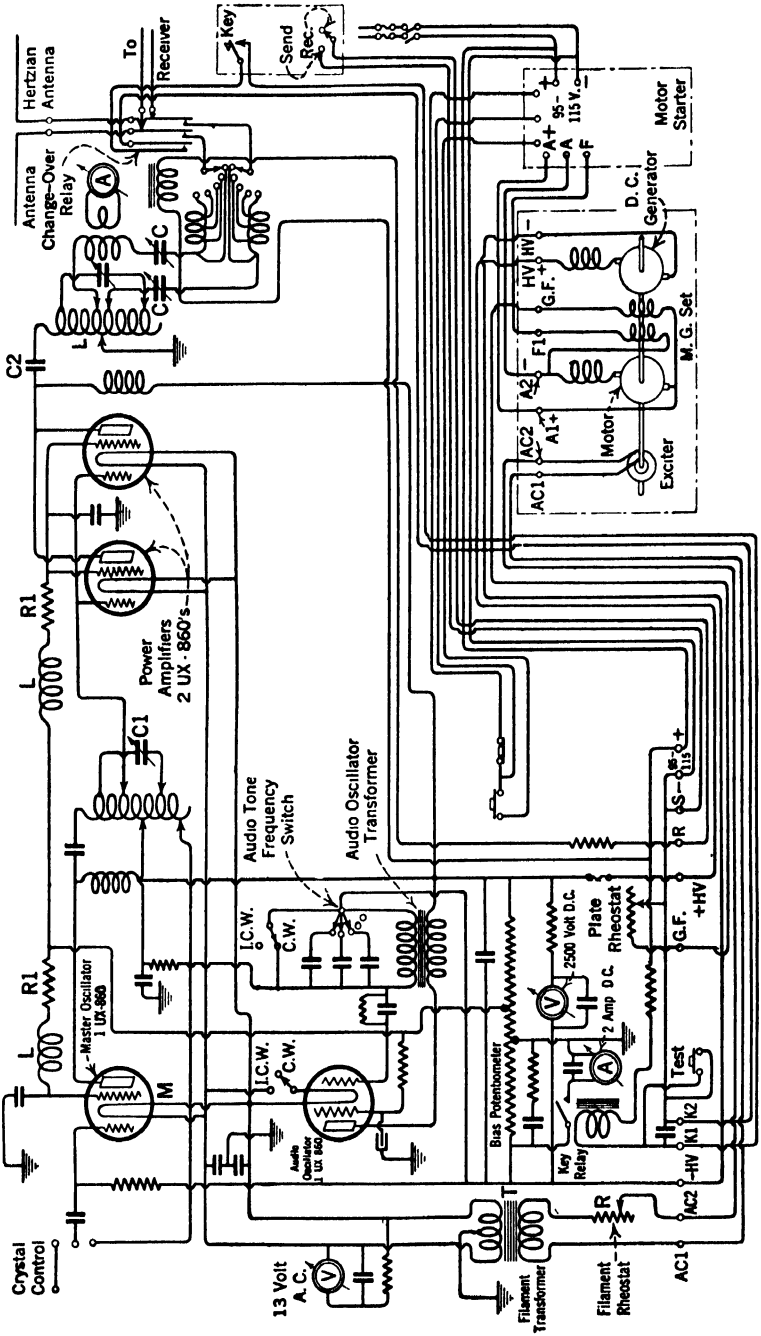

FIG. 387.—Complete schematic wiring diagram of the 200-watt short wave transmitter Model ET-3655. This transmitter employs screen grid tubes and a Hertzian type antenna. It has a wavelength range from 26 to 150 meters. Crystal control may be used to stabilize the transmitted frequency if desired.

The Hertzian type antenna resembles two inverted " L" types with their vertical portions back to back and horizontal portions extending in opposite directions from the vertical portions. This design is known as the *modified horizontal doublet* type. To minimize radiation in the vertical portion of the antenna (also called the transmission line) it is transposed throughout its full length. The transmitter is equipped with two magnetically operated relays. When the sending key is up, the receiving set is connected to the antenna, but when the key is down the receiver is short-circuited.

Radio Telephone Attachment.—This unit is the conventional speech amplifier-modulator type employing the Heising method (constant current system) for obtaining a speech modulated radio wave. The principles underlying this system have been thoroughly covered in preceding paragraphs. Two vacuum tubes are used, one UV-849 as a modulator, and one UV-211 as a speech amplifier.

The radio telephone unit consists of a modulation plate reactor microphone supply, bias supply, bias filters, speech input transformer, coupling condensers, choke coils and indicating instruments.

The plates of the modulator and speech-amplifier tubes are supplied with a high positive voltage from the d-c. generator. The grid bias for these tubes and the microphone current is furnished by the exciter.

The microphone is coupled to the grid of the UV-211 speech-amplifier tube through a 1 to 25 step-up iron-core transformer. When the microphone is in use the grid of the amplifier is supplied with voltages which vary in accordance with the speech frequency current flowing in the primary of the transformer.

Short Wave Adaptor.—It is possible to extend the operating range of all types of modern broadcast receivers to include the short wave channels by properly connecting a short wave adaptor circuit to the receiver. With an adaptor of this type there is no necessity for making changes in the receiver wiring. A typical adaptor circuit is shown in Fig. 387*a*. It operates on the super-heterodyne principle and is designed for use with receivers which obtain their power from an a-c. line. The various elements which comprise such a circuit have already been discussed in different parts of this text. The schematic diagram is given to show the general arrangement of a circuit of this type by which it is possible to convert a broadcast receiver into a short wave receiver and pick up signals from short wave transmitting stations. Plug-in coils for both tuning circuits change the wavelength ranges. These ranges overlap sufficiently to insure continuous stability from the lower to the upper limits of response. The rotors of the variable condensers are grounded to minimize capacity effects from an operator's hand during the process of tuning.

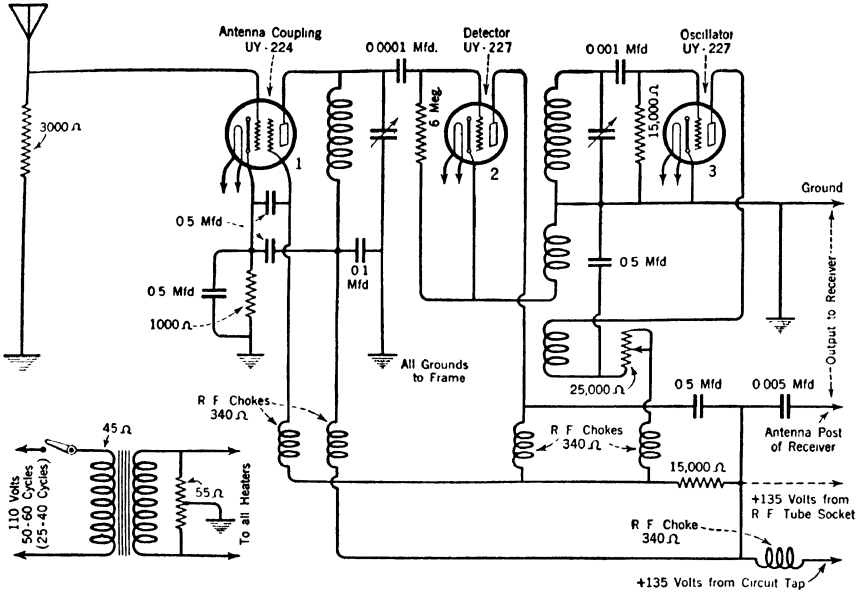

FIG. 387*a*.—Schematic diagram of a short wave adapter for use in conjunction with a broadcast receiver to extend its range for reception of signals from short-transmitting stations.

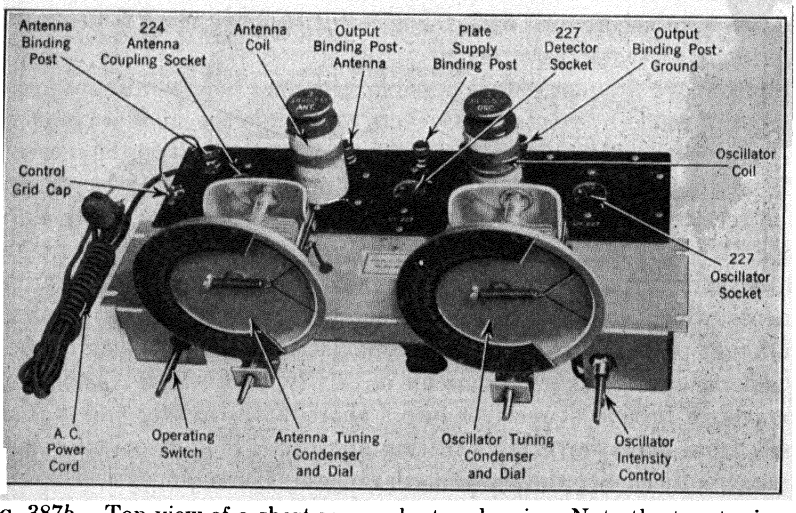

FIG. 387*b*.—Top view of a short wave adapter chassis. Note the two tuning condensers and dials and the special plug-in type antenna and oscillator coils.

CHAPTER XXIII

SPARK FORM OF TRANSMISSION

Introduction.—Radio-frequency alternating currents of suitable power for the transmission of telegraphic signals are generated with a spark transmitter by the process of utilizing the radio-frequency oscillations which are produced whenever a condenser discharges across a spark gap and through a coil of wire, or inductance.

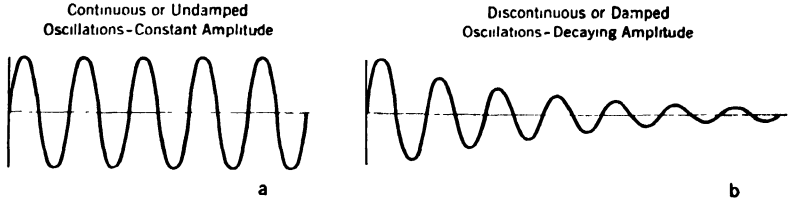

FIG. 388.—Curves showing two different forms of transmitted radio-frequency energy.

A periodically reversing current, such as an alternating current of radio-frequency, may consist of either continuous or discontinuous

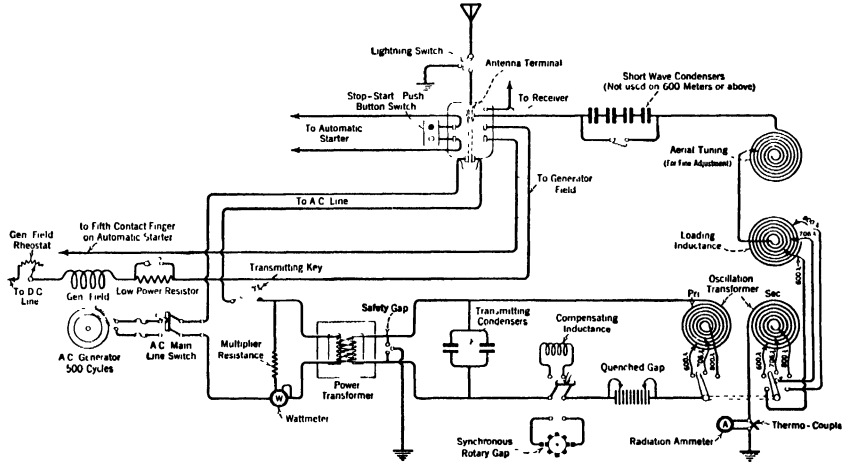

FIG. 389.—The circuits of a spark transmitter from the a-c. source of supply to the antenna.

oscillations as curve *b*, Fig. 388. A group of continuous oscillations of constant amplitude is shown by curve *a*, Fig. 388.

There are three methods employed in commercial telegraphic work for generating continuous oscillations:

(1) By a vacuum tube oscillator.
(2) By an arc generator supplied with power from a d-c. source.
(3) By the radio-frequency alternator (the Alexanderson Alternator).

Discontinuous or damped oscillations, which decay in amplitude, are generated in the circuits of the spark transmitter by the periodic discharge of some form of condenser, as previously mentioned. A fundamental diagram of such a circuit is illustrated in Fig. 389.

The complete theory underlying the action of a condenser when it discharges in a circuit consisting of inductance and capacity is treated thoroughly under the caption "How an Electrical Circuit Oscillates," and should be reviewed at this time.

Principles of Spark Discharge.—Refer to Fig. 390, showing a high voltage transformer, high voltage condensers, spark gap and inductance.

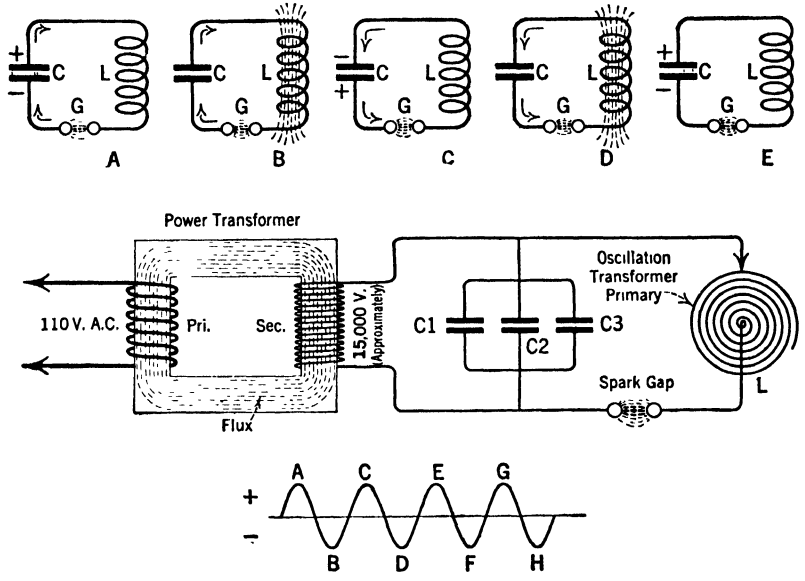

FIG. 390.—The high voltage low frequency and the closed oscillatory circuits of a spark transmitter. The simplified sketches at the top show the oscillatory circuit and how it functions to produce damped oscillations from power supplied by the secondary of a step-up transformer. The complete cycle of events is shown in more detail in Fig. 273.

Power is applied by the transformer to the oscillatory circuit formed by the primary inductance, the high potential condensers, and the spark

gap. By adjusting the length of the gap, the point at which a certain voltage or potential will break down the gap resistance may be regulated. When the voltage of the transformer reaches this point a spark occurs across the gap. When this spark occurs the high voltage in the condensers (the condensers in the meantime being charged by the same voltage building up across the gap) discharge through the primary coil L, resulting in the setting up of oscillations in the circuit consisting of the three condensers, inductance, and the spark gap. The frequency of the oscillations surging back and forth through this circuit depends principally upon the capacity of the condensers and the inductance of the coil, and somewhat upon the resistance. The frequency may be altered by changes in either the size of the condensers or the characteristics of the coil. These oscillations are produced by very high voltages with comparatively low current. The power transformer must be rugged in construction because of the unusual service it is called upon to perform when producing the high voltages.

Analysis of a Spark Discharge Producing a Group of Damped Oscillations.—The analysis of a spark discharge and resulting actions are illustrated in Figs. 390 and 391. The transformer curve and the oscillation curves are shown in Fig. 391. The arrangement of the spark discharge circuit is shown in Fig. 390. Just how a charged condenser functions, together with an inductance, to set up radio-frequency oscillations has already been treated. The combined action of a charged condenser and a coil in producing oscillations when a spark gap is used is not different in principle from the action when no gap is employed. The practical difference lies in the fact that when the gap is used its resistance must be broken down by building up the voltage in the transformer to a certain value. The oscillatory circuit is made electrically conductive when a spark discharge occurs, and at such time the condenser voltage will discharge through the inductance, thus producing radio oscillations.

One complete cycle of events during the discharge of a high voltage condenser through a closed oscillation circuit follow. Refer to Fig. 390. When condensers C_1, C_2, and C_3 absorb a charge given them by the alternating current flowing from the secondary winding of the power transformer, the energy in the circuit is said to take the form of an electrostatic field in each of the condenser dielectrics. In view A the condensers (only one condenser is shown) are to be considered as fully charged. The polarity of the condenser plates is indicated by the signs, positive and negative. It is also to be assumed that the potential strain across the dielectrics at some particular moment is sufficient to overcome the resistance of gap G, and a spark will leap from one

electrode to the other. It is noticed that the spark bridging the gap now functions to close the oscillatory circuit. The discharge current flows across the gap, and ionizes the air, further reducing the gap resistance. This results in the path between the gap electrodes becoming a better conductor of electricity. Most of the energy formerly in the dielectric is converted into energy which flows across the gap and through inductance L, in the direction marked by the arrows. Magnetic lines of force produced by this discharge current are established around L. Thus, the energy in the circuit is now concentrated principally in the magnetic field. This completes the first quarter of the cycle, with the effect shown in view B.

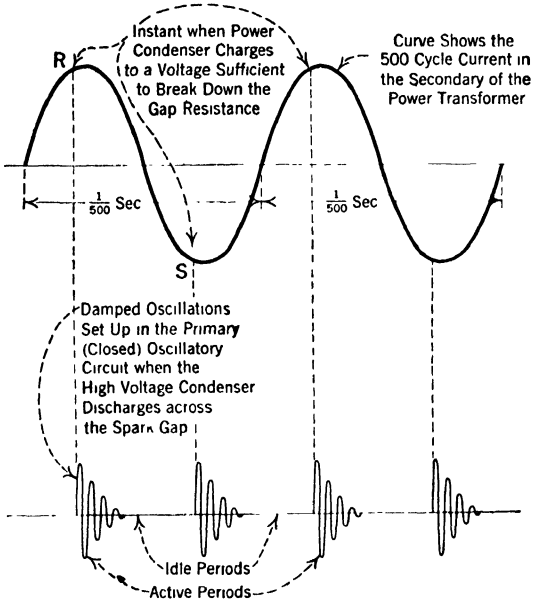

FIG. 391.—These curves indicate that each time the power condensers build up sufficient voltage to overcome the resistance of the spark gap a series of damped oscillations are set up in the closed circuit which are quickly extinguished by the quenching action of the gap.

The condensers now being discharged, no further voltage is furnished by them and the current through L begins to lower in strength, thus causing the magnetic field to change in magnitude also. That is, this decrease of current is accompanied by a reduction in the number of lines of force around L. The changing field around L acts upon its own turns of wire and induces an e.m.f. therein which tends to prevent the current decrease. It is this induced e.m.f. generated by the self-inductance of L that forces the current to continue flowing across the gap and to again charge the condenser. This time, however, the polarity of the condenser plates is reversed. The illustration in view C shows the polarity signs opposite to those in view A.

The quantity of electricity now stored in the dielectric of the condenser is less than the initial charge given it by the transformer, because a certain amount of the energy has been expended in overcoming the vari-

ous oppositions in the circuit. These oppositions include the resistance of the circuit, as well as the resistance of the spark gap. Moreover, dissipation of part of this energy results from the production of heat, light, and sound at the spark gap. The third quarter of the full cycle now commences, for the condenser discharges and current flows across the gap and through inductance L in the direction opposite to that of the flow during the first quarter, as shown in view B. The direction of the current now flowing through the circuit is indicated in view D by the arrows.

After the condenser gives up its stored energy in forcing current through the circuit, across the gap and through inductance L, then L will again be surrounded by a magnetic field. The magnetic field in view D is reversed in direction to that of the field in view B. The magnetic field cannot be maintained without current flow. We know at this moment there is no voltage in the circuit because there is no difference of potential across the condenser plates, as they are discharged. Therefore, the lines of force as shown in view D recede upon the turns of wire of L and induce an e.m.f. in the circuit. This e.m.f. produced by the self-inductance of L causes a continuation or perpetuation of the current flow, which sends current through the circuit to recharge the condensers. The direction of the current is shown by the arrows, and the polarity of the plates at the end of the fourth quarter in view E is marked by signs (positive and negative), these being now similar to the polarity at the start of the cycle. Each reversal of the current flow is called an *alternation.*

At the termination of each alternation, the electric charge in the condenser will become weaker and weaker, due to the dissipation of energy in the circuit resulting from the reasons outlined above. A complete cycle consists of two alternations. The condenser will continue to discharge periodically as long as it has sufficient strength to do so. The transition of energy is from the electric charge in the dielectric to the magnetic field encircling L, and vice versa. This continues as long as the gap is electrically conductive. The diminishing amplitudes in each successive alternation are illustrated in the lower set of curves in Fig. 391. This gradual reduction in the strength of the alternations or oscillations is called *damping.* It should now be evident why a condenser discharging through an inductance and across a spark gap will generate damped waves. The closed circuit which is producing the damped oscillations is not a good radiative circuit for the propagation of radio waves through space; hence it becomes necessary to couple an open circuit oscillator or antenna system to this closed circuit.

The final arrangement of the circuits of the spark transmitter is

illustrated in Fig. 389. It is readily seen that the condensers perform two distinct functions and operate in common with two electrical circuits; namely, they receive a high potential charge at a low-frequency from the transformer secondary, and deliver power to the closed oscillatory circuit when the gap is broken down. The condensers are charged at a low frequency, perhaps 1000 cycles per second, and discharge through the gap and inductance, producing radio-frequency oscillations. The student should notice particularly that two frequencies must always be considered in the complete action, one frequency

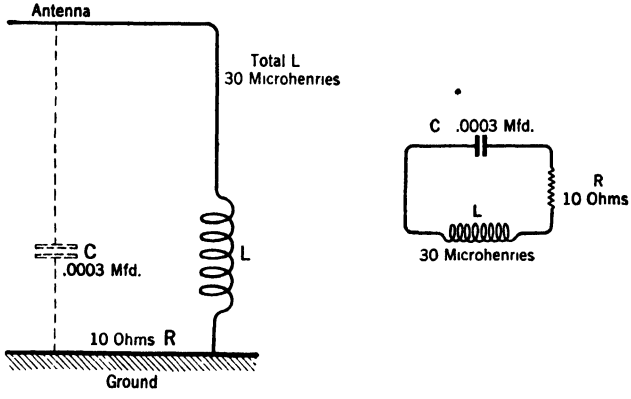

FIG. 391*a*. Illustrating the principle of how an antenna system is equivalent to an alternating current circuit.

being the high voltage output of the power transformer and the second being the frequency of the damped oscillations, as shown in Fig. 391.

In Fig. 389 the wave train of damped oscillations flowing through the closed circuit induces an alternating voltage in the open circuit which sets the latter circuit into oscillation. Refer to the curve in Fig. 401 giving primary and secondary circuit reactions. Keeping in mind that a single cycle of this alternating current in the open circuit sets into motion a single alternating electric wave of the same frequency or time period, we can graphically illustrate the oscillations radiated by the antenna circuit by the group as shown in curve *b* of Fig. 401. The group of damped oscillations in the primary circuit is of short duration, as shown in curve *a*.

The vertical dotted line drawn from curve *a* to curve *b* indicates that the oscillations begin to build up in the secondary circuit before the decay of the last cycle of the exciting current *a*. The oscillations depicted in *b* represent the radiated energy.

P-8, 2-kw. Spark Transmitter.—A fundamental diagram of this transmitter is shown in Fig. 389, a front view of the panel in Fig. 392, and a right-hand side view in Fig. 393.

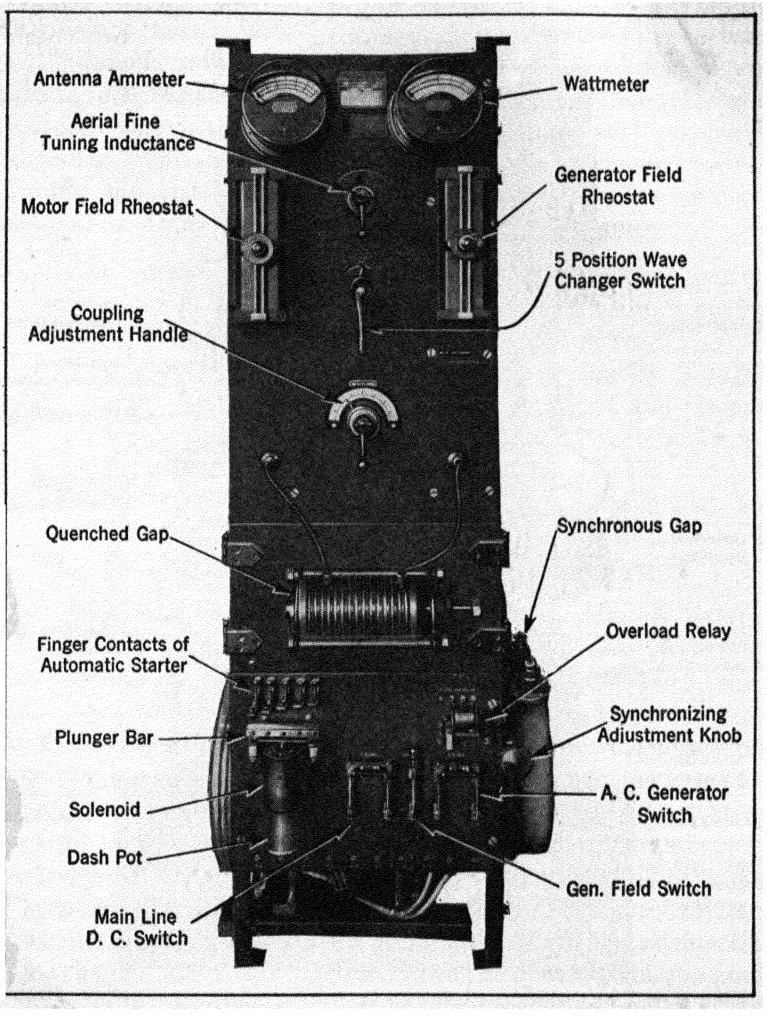

FIG. 392.—Front panel view of 2-kw. 500 cycle spark transmitter, type P-8.

The apparatus consists of the necessary power equipment which includes a 2-kw. 500-cycle motor-generator with a synchronous rotary gap mounted on the generator shaft. The automatic starter is provided with a push-button type "stop-start" switch and an antenna change-over switch which permits the motor to be controlled from the operator's

table. The latter devices are not shown in the photographs, but their proper positions in the circuit are indicated on the diagram. Several protective condensers are employed, and connected across the various

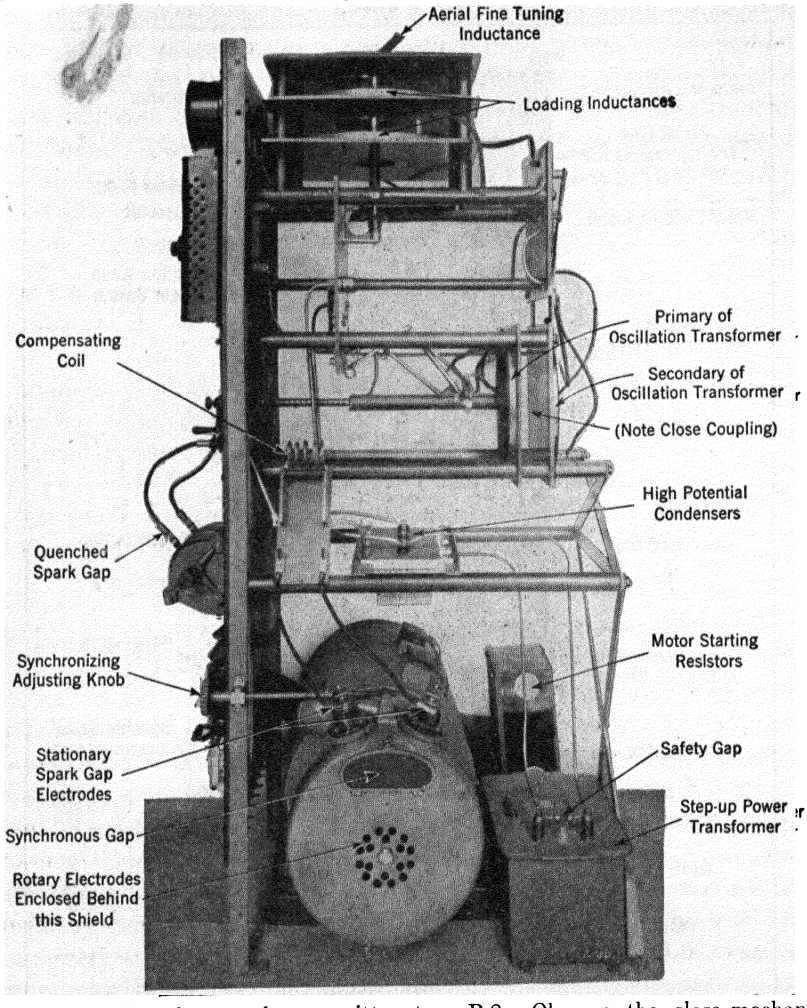

FIG. 393.—The 2-kw. spark transmitter, type P-8. Observe the close mechanical relationship between the primary and secondary coils of the oscillation transformer. This adjustment is known as "close" or "tight" coupling.

windings of the motor-generator. A 60-cell storage battery and charging panel fitted with protective devices and suitable switching arrangement is used for auxiliary power in the event of a breakdown of the ship's generator.

The motor operates on input voltages from 95 to 115 volts. The

generator has a normal open circuit voltage of 350 volts and a working or load voltage of 140 volts. (For complete information on motor-generator operation see Chapter V.) The oscillation transformer is of the inductively coupled type, the primary and secondary windings consisting of a strip-copper spiral wound edgewise on a rectangular insulating support. The secondary turns for the standard waves are selected by means of flexible plug connections, but the taps on the primary inductance are soldered fast in position, connections being shifted from one wave to the other by means of a multipoint wavelength changing switch.

Tuning the Spark Transmitter.—The following facts should be understood in regard to tuning a transmitter of this type.

(1) In order to obtain the maximum flow of antenna current, a different degree of coupling at the oscillation transformer must be found for each of the standard waves.
(2) In order that the radiated waves can be rapidly changed by simply throwing a switch, the primary and secondary windings of the oscillation transformer must remain in a fixed position mechanically.
(3) The coupling of the oscillation transformer is then varied for each standard wave by changing the self-inductance of the secondary, that is, cutting in or out turns.

The correct number of turns for the secondary winding is determined for each of the standard waves experimentally as follows:

For preliminary determination at a standard wavelength, say 600 meters, a trial number of turns (4 to 6 turns) is selected at the secondary winding of the oscillation transformer through the flexible plug contact. This having been done, a second trial number of turns, say 4 turns, are cut in at the loading coil. Turns are added or subtracted at the aerial tuning coil (with the spark gap discharging) until the aerial ammeter indicates a maximum deflection. The adjustment for resonance having thus been located, the primary and secondary oscillation transformer windings are drawn apart or placed closer to ascertain if an increase of antenna current will result. If separating them increases the antenna current, it indicates that too many turns have been included at the secondary for the mechanical position of the couplings selected at the start; and, in consequence, turns must be taken out of this coil and additional turns cut in at the loading or aerial coils, until resonance is again secured. The primary winding must, however, first be placed in its original fixed position relative to the secondary. The correct number of turns must now be found out for the other waves provided by the transmitter; that is, the correct number of turns must be selected and the

coupling adjusted until the maximum antenna current for each wave is secured with the primary remaining in a certain fixed position relative to the secondary.

During the tuning of these sets it has been observed that if initial adjustments are made near to metallic dock buildings, the effective antenna resistance is altered, and, in consequence, the tuning adjustments for maximum antenna current need to be changed slightly when the ship is at sea. Generally it is only necessary to vary slightly the aerial inductance for maximum aerial current.

After the set has been tuned in this manner, the purity of the wave and decrement of the oscillations are measured by means of a wavemeter with a current-indicating instrument connected in series, such as a wattmeter. The approximate value of antenna current to be expected from a 2-kw. 500-cycle spark transmitter operating from 600 to 800 meters is about 12 to 17 amperes.

Transformers, General.- There are three general types of transformers in radio circuits:

(1) Transformers without an iron core, known as "air core."
(2) Transformers with a very small iron core.
(3) Transformers with a heavy iron core.

The air type transformer is used in radio-frequency circuits.

Power transformers are classified according to their design and physical connection of the respective windings and construction of the magnetic circuit as follows: (1) Closed core transformer, and (2) open core transformer.

The process of transformation of an alternating current of a low voltage to one of high voltage is based upon the fundamental principles of electromagnetic induction which have been discussed in other sections.

The essentials of a power transformer are: (1) a primary winding; (2) a secondary winding; (3) a laminated iron core.

Referring to Fig. 394, the alternations of current flowing from the generator through the primary winding *Pri.*, magnetize the iron core, causing a changing flux to permeate the iron core, which in turn induces an e.m.f. in the secondary *Sec.*

An iron core transformer consists of two electrical circuits or coils wound on a common magnetic circuit of iron. The winding which receives the alternating current energy is called the primary, or input, while the coil which delivers energy at the same or an increased or decreased voltage to another circuit, is the secondary or output. The ratio of transformation of voltage between the primary and secondary is

practically in direct proportion to the number of turns on the respective windings. Two types of transformers are shown in Figs. 394 and 395.

In a step-up transformer the ratio is always greater than one to one, as the name implies. If the primary e.m.f. of a transformer is 110 volts, and the secondary e.m.f. is 2200 volts, the ratio of the transformer is 20 to 1. The two general types used in a radio transmitter are the open core and the closed core, as previously mentioned. These names are given to the two types of transformers because of the construction of the magnetic circuit.

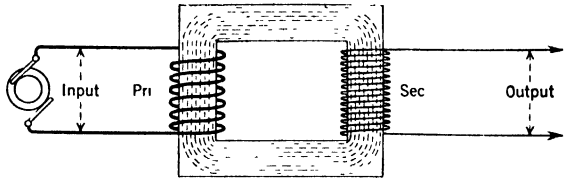

FIG. 394. A conventional diagram of a closed core power transformer with the flux permeating the iron core.

In the open core transformer, the magnetic lines of force pass through the air, as well as through the iron core. The transformer is therefore known as an open core transformer, because the magnetic flux does not circulate through a complete or continuous iron path.

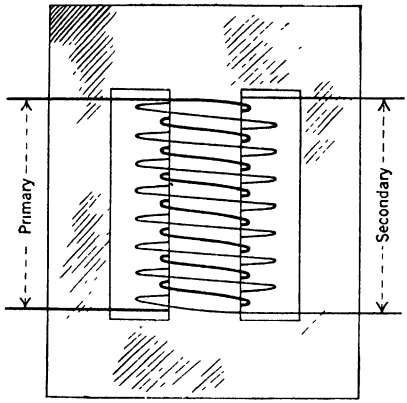

FIG. 395. Conventional drawing of a shell type transformer, showing the primary and secondary windings mounted on the center leg of the iron core.

In the closed core type of transformer, the iron completely closes the magnetic path for the lines of force set up by the alternating current flowing through the coils. Iron having a higher permeability than air increases the density or magnitude of the flux for the same given current in the circuit.

When an alternating current flows through the primary winding *Pri.*, illustrated in Fig. 394, a changing magnetic flux threads in and out around this coil, and the iron core absorbs this magnetic flux. Lines of force cut the turns of wire in the secondary coil *Sec.*, producing in each turn the same voltage. If we assume that one volt of e.m.f. is induced in one turn of the secondary coil, and there are 10,000 turns in this coil, the full voltage across the secondary will then equal approximately 10,000 volts. It is apparent that the voltage induced in the secondary is proportional to the number of

turns of wire in the winding. The flux which cuts the turns in *Sec.* is produced from the current flowing in *Pri.* The flux strength provided by *Pri.* is also dependent upon the number of turns in its winding, and the voltage impressed across each turn of this winding. For example, if the impressed e.m.f. of the primary circuit is 110 volts, and the primary coil is wound with 110 turns of wire, there will be provided an e.m.f. of one volt across each turn. This follows the rule of the proportional voltage drop through a circuit. From this it is evident that the ratio of the voltage transformation between the primary and secondary is directly in proportion to the number of turns on their respective windings. This ratio may be stated as follows: the voltage of the primary E_p is to the voltage of the secondary E_s as the number of turns in the primary N_p is to the number of turns in the secondary N_s. Expressed in a formula:

$$\frac{E_p}{E_s} = \frac{N_p}{N_s}$$

Example: Given a problem to find the secondary voltage of a transformer with these values

Primary voltage = $E_p = 110$

Primary turns = $N_p = 55$

Secondary turns = $N_s = 10{,}000$

Solve for Secondary voltage = E_s

By substitution, $\frac{110}{E_s} = \frac{55}{10{,}000}$

By cross multiplying, $55 \times E_s = 110 \times 10{,}000$

Transposing, $E_s = \frac{110 \times 10{,}000}{55}$

Dividing, the answer is, $E_s = 20{,}000$ volts.

In a 1 to 1 ratio transformer the primary has the same number of turns as does the secondary.

The alternating current transformer does not change the frequency of the current as the lines of force produced by the winding *Pri.* cut each turn in *Sec.* but once, for any given current change; only the pressure, or e.m.f. induced in winding *Sec.* increases, decreases, or remains the same, depending upon whether the number of turns in *Sec.* is greater, less, or the same as the number of turns in *Pri.*

The core of the closed core transformer is rectangular in shape and consists of thin stampings of iron, called laminations, which are insulated one from another. The iron stampings are either oxidized, dipped in shellac, or japanned, so that when the core is assembled no iron-to-iron contact is possible between them. The insulation thus provided between successive laminations reduces the losses in the transformer. The principal losses are:

(1) Copper losses: When current flows through a copper conductor, heat is generated.

(2) Eddy currents: Small whorls of magnetic flux exist in the iron core in addition to the main magnetic field. These magnetic whorls induce small currents in the iron conductor which produce heat. The insulation around the laminations tends to prevent this effect from being carried through the iron mass.

(3) Hysteresis: Due to the varying magnetic field, there is molecular friction set up in the molecules of iron, which also tends to produce heat. This loss can be overcome partly by employing a good magnetic grade of iron having a high permeability.

The entire transformer windings are sometimes immersed in a semi-liquid grease or oil to assist in dissipating the heat. A safety gap is provided to protect the secondary winding in case of a high voltage due to an overload developing across its windings.

Closed Core Transformer.—The closed core step-up transformer consists of a magnetic leakage gap, such as the air gap *M* in Fig. 396. When operating under normal load conditions the air gap in the transformer coil permits the self-inductance of the primary circuit to remain practically constant. The reason for this is that the magnetic flux produced by the secondary coil has an independent magnetic circuit through the leakage gap which can be maintained practically constant. If a strong flux is produced by the secondary, it cannot result in demagnetizing the total flux produced by the primary to the extent where the self-inductance of the latter circuit would be reduced to allow an

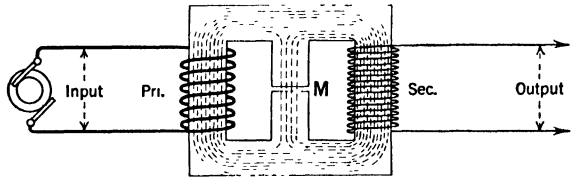

FIG. 396.—A conventional diagram of a closed core power transformer equipped with a magnetic leakage gap.

excessive flow of alternating current from the generator. The advantages of the closed core can be summarized as follows. The primary voltage remains practically constant under varying load conditions; the self-inductance of the primary winding will not change materially in a closed core even upon a direct short-circuit of the secondary; the danger of burning out the windings is minimized. Hence a transformer with a magnetic leakage gap is particularly suited for furnishing the power to the closed oscillatory circuit of a spark transmitter.

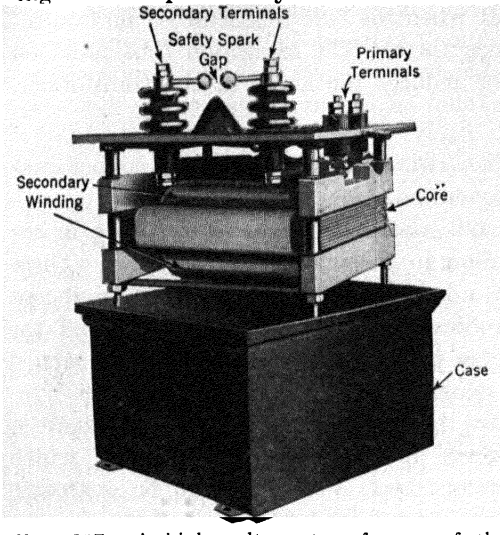

FIG. 397.—A high voltage transformer of the closed core type used in radio transmitting installations.

Open Core Transformer. —Fig. 398 shows the open core step-up voltage constant current transformer. The primary coil is wound on a core consisting of a bundle of fine iron wire in circular form. Each strand of wire is oxidized or dipped in shellac in the same manner as the laminations of the closed core. The open iron core is covered with several layers of insulating linen tape called empire cloth, and wound with two or three layers of a coarse copper wire, such as No. 10 or 12 B & S gage S.C.C. wire. The entire primary coil is enclosed in an insulating tube to protect it both from the iron core and from the secondary coil. The secondary winding is composed of several sections, or "pies."

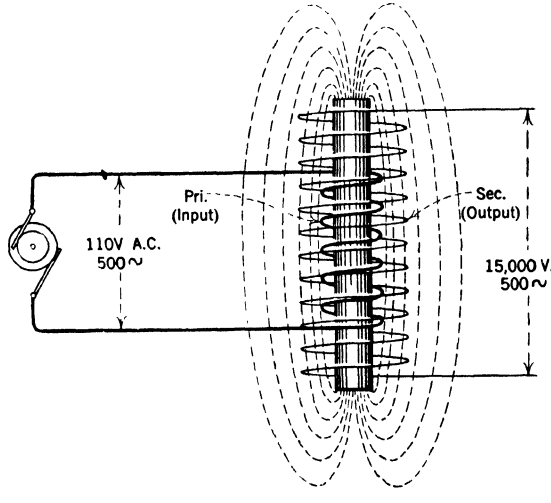

FIG. 398.—The low voltage input and the high voltage output of an open-core power transformer.

Watts Input—Watts Output, the Ratio of the Transformation of Power.—The efficiency of any device is measured by the ratio between the amount of energy put into it and the amount of energy obtained from it. That is,

$$\text{Efficiency} = \frac{\text{Output}}{\text{Input}}$$

When operating any type of transformer, the output efficiency is lowered by the amount of the copper loss, iron loss, and other losses. We know that the wattage output of a circuit cannot be greater than the wattage input. In other words, we cannot get more total energy out of the transformer than we put into it, and we must remember that the total watts of energy in the circuit is dependent upon the voltage and the amperage, or current. If a transformer is 97 per cent efficient, the power loss would equal 3 per cent.

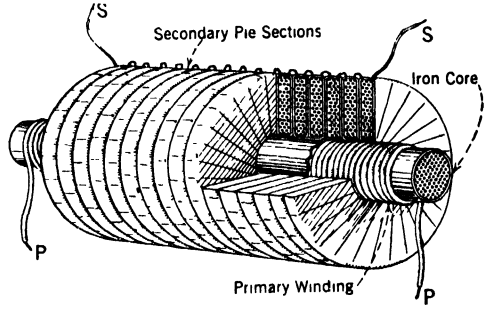

FIG. 399.—A detailed view of a power transformer. Note that the secondary winding is composed of many small sections connected together.

Spark Discharger.—The various types of spark gaps are different in their mode of functioning. Four general types are:

(1) Plain spark discharger.
(2) Non-synchronous rotary discharger.
(3) Synchronous rotary discharger.
(4) Quenched spark or multiple plate discharger.

(1) Plain Spark Discharger.—The plain spark discharger consists of a spark gap between two fixed metal electrodes. It has several disadvantages; it is noisy, and does not quench the spark quickly, hence its use is prohibited.

(2) Non-Synchronous.—The non-synchronous rotary spark discharger consists of a circular disk with stationary electrodes connected in series with the closed oscillation circuit and a rotor element with electrodes mounted on a disk driven by a d-c. motor. A spark discharge will occur each time two electrodes of the disk come opposite the two stationary electrodes, the number of spark discharges varying according to the number of disk electrodes and the speed of the motor driving the disk. The beginning of the discharge and its duration is timed by the gap length, which is regularly changed by the rotating electrodes.

(3) **Synchronous Spark Discharger.**—The synchronous rotary spark discharger is similar in construction to the non-synchronous type with the exception that it is mounted on the end of the motor-generator shaft. There are the same number of electrodes mounted on the rotor disk of the gap as there are field poles in the generator. Since the rotor of the gap revolves at the same speed as the armature which generates the alternating current supplied to the power transformer, a spark discharge is produced in synchronism with each alternation of the charging current. A uniform note of musical pitch is emitted by the transmitter, as the two frequencies are synchronized, that is, the spark frequency and the generator frequency. With proper adjustment of electrodes, the spark discharges can be made to occur at the peak voltage.

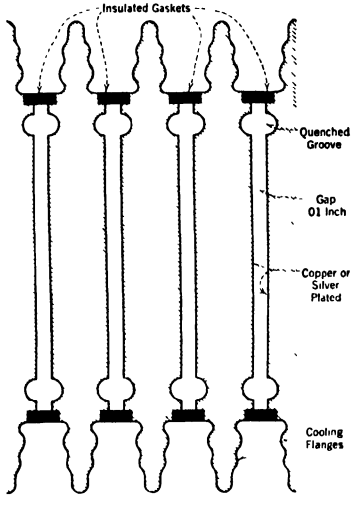

FIG. 400.—A cross-sectional view of a few of the gaps in a quenched spark gap. The complete assembly usually consists of approximately 15 individual gaps.

(4) **Quenched Spark Discharger or Multiple Plate Discharger.**—The function of the quenched spark discharger is similar to that of the synchronous type. The action of either device in the circuit is such that it serves in a manner which may be likened to that of a trigger, as it starts oscillations in the closed circuit, and also quickly stops this discharge current by quenching or extinguishing the spark. The antenna system is thus allowed to oscillate freely, at its own frequency, as previously explained.

The quenched type gap is shown in the front panel view in Fig. 392.

A cross-sectional view of several gaps is illustrated in Fig. 400. They consist of two flat round copper disks spaced approximately 1/100 in. apart by an insulating gasket, the surface of each disk being deeply grooved near the outer edge. When a spark discharge occurs between the flat surfaces of the disk, the spark moves rapidly toward the outer edge and is quenched when it reaches the point where the gap is widened, due to the grooving in the plates. This prevents the spark discharging at the edge of the gasket, which would soon cause a short-circuit. When a series of short spark gaps are substituted in place of a single longer gap, a more rapid quenching of the strongly damped discharge current is provided. When a discharge occurs across the gap, the space is ionized,

but on the other hand, when the spark discharge ceases, the gap is restored to its initial high resistance, providing, of course, that the space in the gap is rapidly de-ionized. Refer to the electron theory on ionization.

Rapid quenching takes place when the gap is made airtight, by careful assembly of the washers (gaskets) and by keeping the surfaces of the gaps clean and smooth. The gaps are large in area and provided with radiation flanges to dissipate the heat. A motor blower or air duct is sometimes employed to keep the gap cool. The surface of the gap in certain types is silver-plated. The complete quenched discharger used with the 500-cycle 2-kw. transmitter is made up of 15 gaps mounted in series, tightly clamped together, although in other types there may be less than this number. The gap is provided with either flexible clips or a system of mechanically operated contact blades which serve to cut

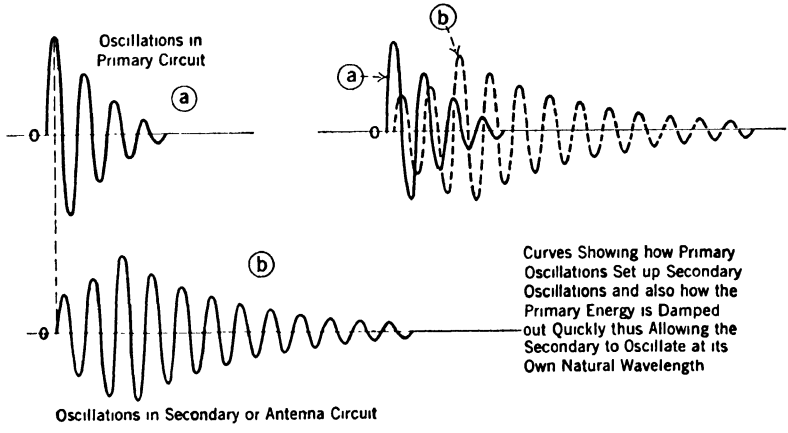

FIG. 401. The two curves on the left show how the antenna system of a spark transmitter derives its radio-frequency power from the rapidly damped oscillations in the primary circuit. The illustration at the right shows the two curves superimposed on each other.

in or cut out gaps as desired for operation of the transmitter under normal power.

The quenched type spark gap permits one spark discharge for each alternation of the charging current. In case a 500-cycle generator is employed, 1000 wave train groups of damped oscillations are radiated. The quenching effect is illustrated in the lower curves of Fig. 391. The reaction between the primary and secondary circuits is diagrammatically illustrated in Fig. 401. Summarizing, the advantages of the quenched spark gap are:

(1) It has no moving parts.
(2) It permits the use of low voltage transformers.
(3) It is noiseless in operation.
(4) When properly adjusted, it gives the synchronous trains of spark discharges.
(5) High antenna current is obtained because closer coupling at the oscillation transformer is possible, with the factor of decrement maintained within the limits defined by the government regulations.
(6) The uniform spark discharge produces a clear, high-pitched note which permits a better formation of the dots and dashes of the telegraphic code and insures a more easily deciphered signal which will penetrate through atmospheric disturbance. The critical pitch of the note is also advantageous because the diaphragms of the telephone receivers respond to it more effectively.

In the event that the transmitting condensers become punctured or broken down and spares unavailable, a spark transmitter could be operated in an emergency as follows.

Place the secondary of the power transformer in series with the spark discharger and connect these two elements directly across an open gap inserted in the antenna circuit. The antenna will then be set into excitation by the spark discharges occurring across the gap, thus radiating a broad interfering wave. A spark transmitter in which the gap is connected directly in series with the antenna circuit is called a *plain antenna transmitter*. One of the chief advantages of the synchronous spark discharger is that it permits the handling of large power, and also the oscillations in the closed circuit are rapidly damped out. This reduces the interaction between the magnetic fields of the primary and secondary of the oscillation transformer. A minimum re-transfer of energy from one circuit to the other permits the antenna current oscillations to alternate freely at their own natural period, or frequency.

Power may be regulated in a quenched gap as follows:

(1) By reducing the a-c. generator voltage.
(2) By decreasing the number of gaps used.
(3) By reducing the coupling at the oscillation transformer, if necessary.

In the synchronous rotary spark set, power is reduced either by reduction of coupling at the oscillation transformer, or by lowering the generator voltage.

Pure Wave.—The following regulation is an excerpt from the "Act to Regulate Radio Communication."

"At all stations if the sending apparatus, to be referred to hereinafter as the transmitter, is of such a character that the energy is radiated in two or more wavelengths, more or less sharply defined, as indicated by a sensitive wavemeter, the energy in no one of the lesser waves shall exceed ten per centum of that in the greatest."

A transmitted wave is said to be an impure wave when the amplitude strength in any lower wave exceeds ten per centum of that in the resonant or greater wave.

Decrement. Use of a Sharp Wave.—The regulations state:

"At all stations the logarithmic decrement per complete oscillation in the wave trains emitted by the transmitter shall not exceed two-tenths (0.2) except when sending distress signals or signals and messages relating thereto."

A transmitted wave with a decrement greater than 0.2 is a broad wave and possesses interfering qualities.

The Antenna Changeover Switch.—The antenna transfer switch is required for the purpose of disconnecting the receiving apparatus from the antenna while transmitting, or vice versa. Because very high potentials are generated by the transmitting apparatus, the receiving set must be protected from the transmitting antenna by a switch and contacts spaced at least 6 in. apart. Various types of antenna changeover switches in general perform the following functions when thrown to the transmitting position:

(1) The antenna is connected to the loading inductance or oscillation transformer of the transmitter. The changeover switch is also called the *antenna transfer switch* and *send-receive switch.*
(2) Direct current is supplied to the generator field by the closing of the contacts, thus exciting the generator field.
(3) The generator circuit to the primary winding of the power transformer is closed.
(4) If a motor blower is used for the spark discharger, its d-c. circuit is completed.
(5) The circuit to the primary winding of the transformer of the receiving set is broken, and in some of the older type sets employing a crystal detector, the crystal is short-circuited by the closing of contacts. In this type the telephone receivers are sometimes short-circuited.

During the period of reception the reverse connections and disconnections are completed when the switch is thrown to the receiving position, as follows:

(1) The antenna is disconnected from the transmitter transformer and connected to the receiving transformer.
(2) The primary circuit of the power transformer is opened.
(3) The generator field circuit is opened.

(4) The d-c. circuit of the motor blower is opened, providing this apparatus is used.

(5) If a crystal is used in the receiver, the short circuit across it is removed.

The antenna switch is generally equipped with remote control by means of a " stop-start " switch which serves tooperate the automatic starter. By shutting down the motor-generator during reception, interference from *brush noises* may be eliminated.

Transmitting Relay Key.—In radio telegraphy, an ordinary type of signaling key can be connected directly in the a-c. main line circuit supplying current to the power transformer whenever a current of low value is to be interrupted. While a very small arc may be drawn across the contacts, there will not be sufficient heat generated to burn away or damage the points. However, when large current values are interrupted, the arcing is intensified and heavier contact points are required. Moreover, a stronger spring mechanism is needed in order to reduce the possibility of the points sticking together, burning and pitting their contact surfaces. A heavy key, called a relay key, magnetically operated, is controlled by closing the smaller hand key which is connected to an electromagnet. A relay key, with its circuit diagram, is sketched in Fig. 402. The contact points *PP* are made of either platinum, silver, iridium, or other alloys having a low coefficient of resistance. The circuit of the electromagnetic relay key is energized from the 100 volt d-c. line. The direct current flows through a resistor of approximately 100 ohms, the hand key, and finally through a pair of magnet coils *MM*. The coils are wound in such direction that they produce the proper polarity at the poles and create a strong magnetic field which attracts the iron armature *A*, which in turn carries the extra large contacts *PP*. The lower contact *P* is stationary. When the electromagnet coils are energized by closing the hand key, armature *A* is attracted toward contact *P*. When the hand key is released the coils are de-energized and the armature is pulled by a strong spring, thus making and breaking the circuit at *PP*. In high power work the contact points of electromagnetic keys may be operated in a bath of oil to break 60 or more amperes with minimum arcing.

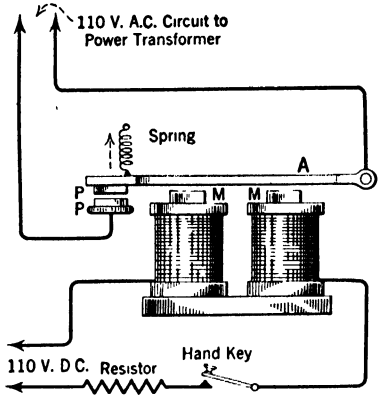

FIG. 402.—How a hand key is used to operate an electromagnetic relay key.

CHAPTER XXIV

ARC TRANSMITTERS

2-kw. Federal Arc Transmitters.—The standard arc transmitters are based upon the method of obtaining radio-frequency oscillations by means of an electric arc. The arc is enclosed in a chamber with an atmosphere containing hydrogen and the electrodes are placed between the poles of a powerful electromagnet, which produces a strong transverse magnetic field tending to blow the arc out. Carbon or graphite is used for the negative electrode, while the positive is made of copper, and water-cooled.

An arc transmitter, a view of which is shown in Fig. 403, consists of the following main units:

(1) A source of direct current of suitable voltage.
(2) An arc converter.
(3) An antenna loading inductor.
(4) An antenna and ground system.
(5) A signaling device.
(6) Auxiliary and control apparatus.

The essential features of such a transmitter and the main circuits are outlined in Fig. 404. The arc converts the power supplied by the d-c. generator into radio-frequency energy with undamped current in the antenna circuit. The antenna circuit includes the antenna, the loading inductor, the electrodes of the arc and the ground system. The choke coil prevents the flow of radio-frequency current from the arc back into the power machinery and serves to sustain and steady the arc instelf. The frequency of the undamped current in the antenna circuit depends upon the inductance and capacitance of this circuit. The resistance of the circuit also affects the frequency. The frequency and therefore the wavelength may be altered by changing the value of either the inductance or the capacitance, or both. Since the capacitance is furnished by the antenna and therefore is fixed, the inductance of the circuit is varied in making changes of wavelength. This is accomplished by changing the connections to the antenna loading inductor.

In electric power practice rotary converters are used to convert alternating current of 60 cycles or other commercial frequencies into direct current. In the field of radio communication arc converters are

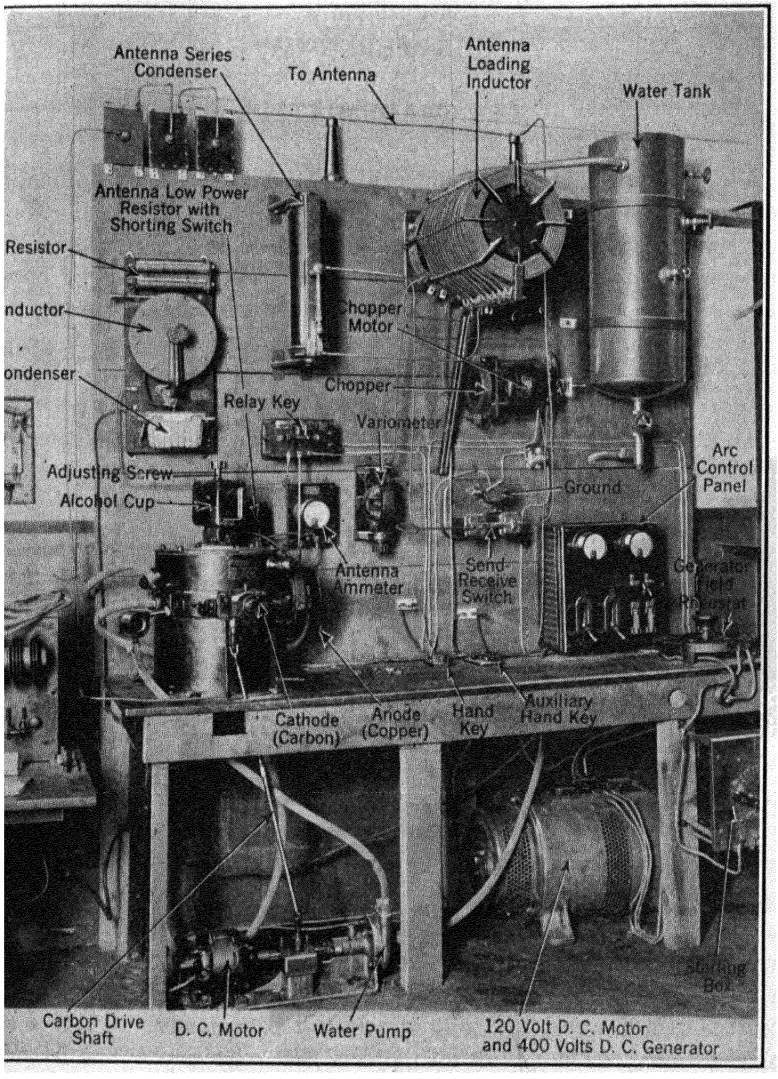

FIG. 403.—The 2-kw. Federal arc transmitter.

used to convert direct current into alternating current of high frequency—for example, 60,000 cycles and higher. The rotary converter, however, involves heavy rotating parts, commutators, and so on, while

the arc converter is a stationary machine. All parts of an arc converter are stationary, except the carbon electrode, which is rotated very slowly in order that it may burn evenly, and which is made so that it may be screwed in and out, in order to strike and adjust the arc. In operation, the length of the arc flame is adjusted to secure maximum antenna current and this is the only adjustment or attention required. After the arc has been started and adjusted, only occasional slight adjustments are needed. The carbon does not burn away as in an ordinary arc, but, on the other hand, usually builds up very slowly, depending on the chemical composition of the gas in the chamber. This very convenient feature makes it possible to operate an arc converter for hours at a time with only a few slight adjustments of the carbon.

The hydrogen gas in the arc chamber is obtained by the decomposition of alcohol, which is fed in drop by drop, and vaporized by the intense heat of the arc. Kerosene, which also may be used, gives very good operation, especially on the shorter waves, but has the disadvantage of causing an excessively large amount of soot in the chamber. Illuminating gas can be used when available.

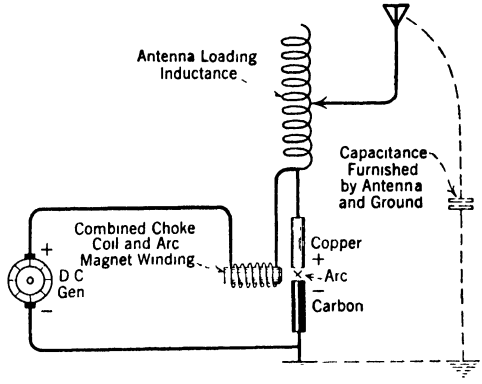

FIG. 404.—A fundamental arc diagram with the signaling circuits omitted

Signaling.—While the arc is in operation there will be a continuous flow of undamped current in the antenna circuit unless a means is provided whereby the radiated energy may be broken up into dots and dashes. Signals may be transmitted by any of the three following methods:

(1) Back shunt signaling system.
(2) Coupled compensation signaling system.
(3) By means of a chopper used together with either of the above methods.

Back Shunt Method of Signaling.—The essential units of this method of signaling are:

(1) The back shunt circuit.
(2) The back shunt relay key.
(3) The Morse hand key.

The circuits employed for sets equipped with the back shunt method of signaling are outlined in Fig. 405. When the movable contact of the back shunt relay key presses against the stationary contact which is connected to the bottom of the antenna loading inductor, the radio-frequency current flows in the antenna circuit. When the movable

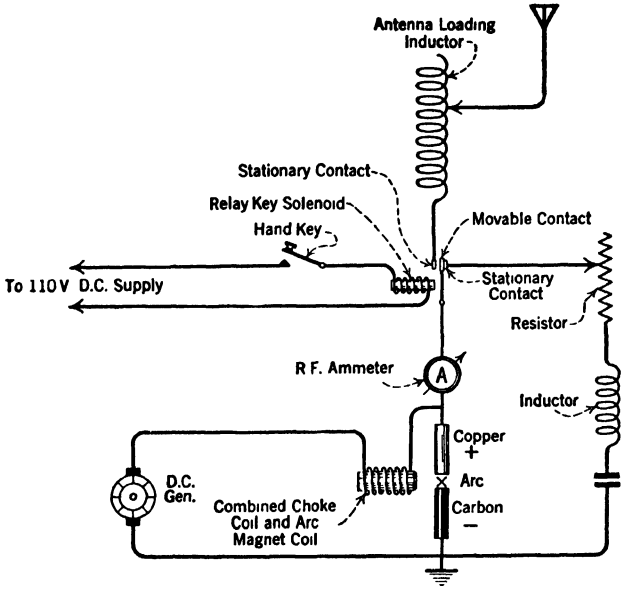

FIG. 405.—A fundamental arc diagram showing the circuit arrangement for the back shunt method of signaling.

contact presses against the other stationary contact, the radio-frequency current flows in the back shunt circuit and there is no current in the antenna, because it is then disconnected from the arc. The relay key is adjusted so that the movable contact makes connection with one stationary contact before it breaks with the other. This permits the arc to remain in constant operation while being transferred from the antenna circuit to the back shunt circuit. In practice, the back shunt relay key is operated by an electro-magnet, which is controlled by a small Morse hand key.

Coupled Compensation Method of Signaling.—The circuits used when signaling by the coupled compensation method are outlined in Fig. 406. The coupled compensation loop is a single turn of cable placed around the lower end of the antenna loading inductor. By means of the auxiliary hand key, the loop may be short-circuited at the will of the operator. With the arc in operation and the auxiliary hand

key open, radio-frequency energy will be radiated at a certain wavelength. If the key is depressed, the energy will be radiated at a shorter wavelength than before. This change in wavelength is due to transformer action and mutual inductance between the main coil and the short-circuited loop. Radio-frequency energy is thus radiated at two distinct wave-lengths. The receiving station must tune to hear only the

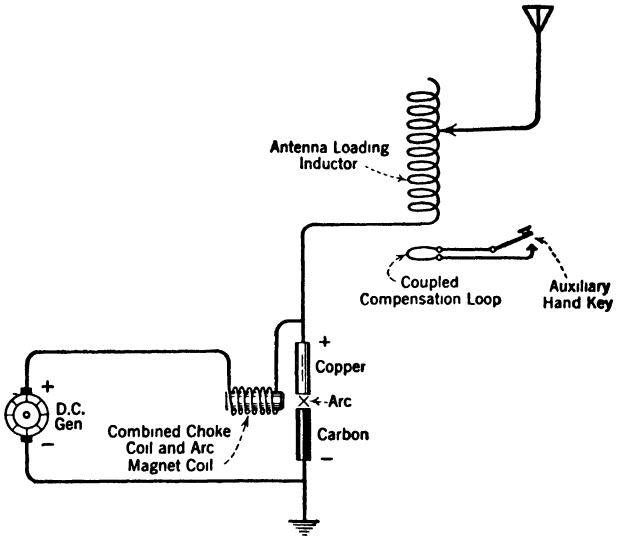

FIG. 406. A fundamental arc diagram showing the circuit arrangement for coupled compensation method of signaling.

shorter wave, since this is the one used to transmit signals by depressing the hand key.

Signaling with Chopper.—The frequency of the wave radiated by an arc radio transmitter is greater than can be heard by the human ear. In transmitting to a station which is receiving with a crystal or non-regenerative vacuum tube detector, it is necessary to break up the radiated energy into wave trains of an audible frequency. This is accomplished by the chopper, which consists of a commutator wheel driven by a small motor.

Referring to Fig. 407, the commutator wheel, when rotated, opens and short-circuits the coupled compensation loop at a speed which gives a musical note in the receiver. The radio-frequency energy is thus emitted at two wavelengths, as when using the auxiliary hand key, but in this case the wavelength rapidly alternates between the maximum and minimum value. A continuous musical note is thus

produced which may be heard by a receiver using crystal detectors, or a non-oscillating vacuum tube detector.

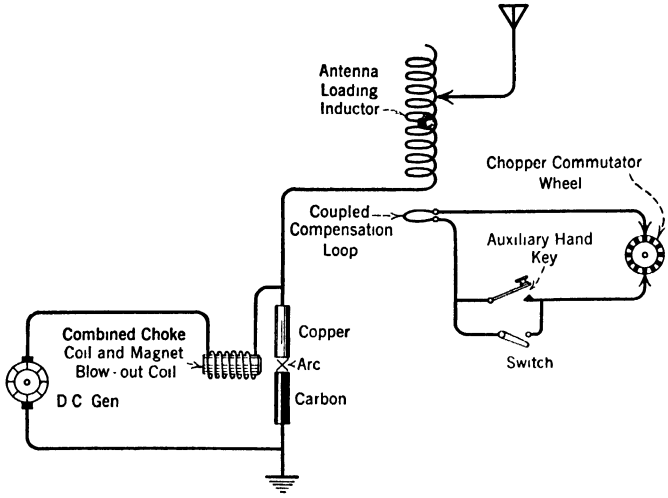

FIG. 407. A fundamental arc diagram showing the circuit arrangement for chopper method of signaling.

Signals may be transmitted either by means of the auxiliary hand key connected in series in the circuit between the loop and the chopper, or by means of the back shunt method of signaling. When the auxiliary hand key is used, the radiated wave is broken into wave trains of audible frequency only when the key is closed, and the receiver therefore reproduces no signal when the key is open. When the chopper is used with the *back shunt* method of signaling, the auxiliary key is shorted by a small switch. The chopper is effected whenever current is flowing in the antenna circuit, and signaling is accomplished by controlling current with dots and dashes in the antenna, as described in the paragraphs on the back shunt methods of signaling.

The signals emitted by an arc transmitter may be in the form of undamped radio-frequency energy (c.w.) or of undamped energy broken into wave trains of audible frequency. Receiving sets must be equipped to receive either type of signals.

Models " K " and " Q " 2-kw. Arc Transmitters.—There are two models of 2-kw. arc transmitters to which this instruction is applicable: Model " K " and Model " Q." The Model " K " arc radio transmitter is for use on naval vessels and Model " Q " is for merchant ships. All of the apparatus for the two sets is the same and the sets are identical in every way except for the range of wavelengths employed.

With the Model " K " sets, the chopper is used on waves below 952 meters. On 952 meters and above, the set is operated as an undamped wave transmitter.

In the case of the Model " Q " sets for merchant ships, the chopper is used on all waves up to and including 800 meters. For the waves of 1000 meters and over, it is operated as an undamped wave transmitter.

In general, the 2-kw. arc radio set may be operated as an undamped wave transmitter on wavelengths of 950 meters and above. Below 950 meters the chopper is used.

Motor Generator for 2-kw. Arc Transmitter.—The arc of a 2-kw. transmitter requires direct current power supplied at 250 to 400 volts. This is furnished by a two-bearing Crocker-Wheeler motor-generator set, which consists of a 100 to 120-volt d-c. motor, directly connected to a shunt-wound separately excited 2-kw., 400-volt d-c. generator. The generator will deliver 2 kw. at 250 to 400 volts, and is wound for separate excitation from the 120-volt d-c. supply.

Protective Devices.—Two protective devices for the motor and generator are mounted in the terminal box on top of the unit and are connected in the circuit at all times. These are small condensers which absorb any stray radio-frequency currents which may leak back into the power machinery circuits.

Motor Starter.—The motor-generator is started by means of a hand-operated motor starting panel. This is equipped with an overload circuit breaker which opens the motor supply circuit in case the current becomes excessive. The terminals on the starting panel are marked to insure proper connections.

Generator Field Rheostat.—The power output of the arc converter is regulated by adjusting the voltage of the d-c. generator by means of the generator field rheostat, which is of the single plate type, shown in Fig. 408. The rheostat should be installed where it can be easily reached by the operator and in a place where there is sufficient air circulation to prevent it from overheating.

Arc Control Panel.—The arc control panel shown in Fig. 403 is the switchboard through which connections are made between the arc converter and the d-c. generator. It also carries a switch through which the entire transmitter is supplied with 110-120 volts direct current. On the panel are mounted:

(1) The set supply switch and fuses.
(2) The arc main line switch, with overload trip coil.
(3) The arc starting resistor and shorting switch.
(4) The d-c. ammeter for the arc circuit.
(5) The d-c. voltmeter for the arc circuit.

The arc main line switch is a special quick-break switch, which connects the arc converter to the d-c. generator. It is provided with a trip coil which opens the switch in case of overload. The switch will not close on overload or short-circuit.

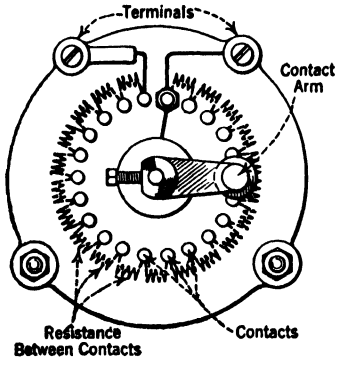

FIG. 408.—A rheostat of this type is usually employed for controlling the field excitation of either d-c. motor or generator.

The arc starting resistor is connected in series between the arc converter and the d-c. generator and serves to protect the generator from sudden overloads when the arc is struck. It may be short-circuited by the starting resistor switch after the arc has been started.

The d-c. ammeter and voltmeter indicate the power input to the arc.

The arc control panel is designed for wall mounting. The metal framework should be securely grounded through the terminal and lug supplied for this purpose. The negative terminal of the d-c. voltmeter is supplied through this ground connection.

When the handle of the arc main line switch is pushed down until it locks, the arc is connected to the generator through the ammeter and arc starting resistor. To open the switch, the operating handle should be raised until the switch trips. The arc starting resistor switch is operated in the same manner. It should be closed only after the arc has been started and is in operation. These two switches are interlocked so that both are opened whenever the arc main line switch is opened. The arc starting resistor is thus automatically placed in series between the arc converter and the generator whenever the main switch is opened to shut down the arc. The switches may be operated separately by opening the arc starting switch first and then the main line switch.

Care should be observed when shutting down the transmitter to open the various switches in the following order: First, the arc main line switch and starting resistor switch; second, the set supply switch.

Arc Converter.—The arc converter, shown in Fig. 403, has a nominal rating of 2 kw. The series field coils (blow-out magnets) within the converter are designed to safely carry 8 amperes direct current for 5 hours. The maximum current rating is 10 amperes for 2 hours.

The arc converter is designed for operation on 250 to 400 volts direct current. The voltage necessary to obtain a given antenna cur-

rent on any wavelength depends upon the resistance of the antenna circuit at that wavelength.

The magnetic circuit is of the closed type. Pole tips project into the top and bottom of the arc chamber. The steel outer shell of the arc converter forms a return path for the magnetic flux.

Series Field Coils (Blow-Out Magnets) Used in Arc Chamber.—The field winding is divided into four coils. Three of these are placed below the chamber and one is placed above it. All four coils are connected in series and serve both as a magnetizing winding and as choke coils to prevent the flow of radio-frequency current back into the d-c. generator.

The blow-out magnet coils used in arc transmitters serve a double purpose: (1) they tend to blow out the arc at certain periods, which removes the ionized atmosphere existing between the arc electrodes, thereby reducing heat at this point and restoring the arc resistance to normal; and (2) they function as radio-frequency choke coils, thus excluding r.f. oscillations from the d-c. generator circuit.

Arc Chamber.—The arc chamber is a gastight and watertight compartment within which the arc burns. The chamber is enclosed at the top and bottom by water-cooled bronze plates. It is divided horizontally into two parts by a hinged joint, which permits the section containing the upper field coil to be lifted back. This leaves the lower part of the chamber, which contains the arc electrodes, easily accessible for cleaning and inspection.

The arc chamber should never be opened until at least one minute after the arc has been extinguished. Otherwise the red-hot carbon will ignite the explosive mixture which is formed when air combines with the chamber gases.

Anode Tip.—The *anode* is the positive electrode of the arc. It consists of a water-cooled copper tip supported by a suitable holder, which is insulated from the arc chamber by means of a bakelite disk. The copper tip is brazed to a short piece of brass tubing and this unit, which is known as the anode tip, is renewable when it becomes worn after a long period of operation. Care should be taken to see that the anode tip is always properly aligned midway between the magnet poles.

Carbon Electrode.—The negative electrode of the arc is called the *cathode.* It consists of a carbon in a removable holder which is held within a mechanism that is slowly rotated by means of worm gears. The carbon is clamped in the holder by means of a split taper collar and locking nut. The holder is provided with a molded "Bakelite" knob so that the portion of the holder which grasps the carbon may be

screwed in and out for adjustment of the arc length. The carbon for the 2-kw. arc converters is ½ in. in diameter and 7 in. long.

Alcohol Supply.—The hydrogen gas which is necessary for the operation of the arc converter is supplied by the decomposition of alcohol. An alcohol cup is mounted on top of the arc converter. This is provided with a needle valve and a sight feed glass by means of which the flow may be adjusted and observed. The alcohol drips into the chamber through a hole in the upper magnet pole. When it comes in contact with the arc flame it is decomposed and a percentage of hydrogen is released. Either grain or denatured alcohol may be used. When the arc is started, after a long period of rest, it is necessary to allow the alcohol to drip rather rapidly into the chamber; but after the arc has been running for a few minutes the rate of flow may be reduced to only a few drops per minute—only enough to maintain full antenna current and a smooth running arc.

A pressure equalizer pipe within the alcohol cup provides a passage through which gas from the chamber is permitted to reach the upper surface of the alcohol within the supply cup. This pipe insures an equal pressure above and below the alcohol and permits the use of a gravity feed. The supply of alcohol should always be turned off whenever the arc is shut down for more than a minute or two. Otherwise, alcohol will be wasted and the chamber will be flooded.

Water Flow Indicator.—An indicator is supplied in order that the operator may always be sure that water is flowing through the various arc cooling circuits. This consists of a small metal case with a glass front and back within which a colored marble is placed. When water flows through the indicator, circulation is indicated by the motion and rattling of the marble.

Pressure Regulator.—As alcohol is supplied continuously to the arc converter during operation there will always be a certain amount of gas generated within the chamber. A hose nipple is provided by means of which the excess gas may be conducted through a short piece of hose to the unit called the *pressure regulator*. The pressure regulator consists of an aluminum receptacle divided into two compartments by means of a rubber diaphragm. This diaphragm serves to maintain the gases within the chamber at approximately atmospheric pressure at all times.

Care of Arc Converter.—The main points to be observed in caring for an arc converter are:

(1) The chamber should be kept reasonably clean.
(2) No water leaks, however slight, should be permitted inside the chamber. The anode tip connection and gasket should be tested whenever a new tip is installed.

(3) The chamber should be kept air tight. The surfaces of the upper and lower chamber sections should always be clean and the gasket in good condition.
(4) The bakelite anode insulating disk and its gasket should be kept clean.
(5) The moving parts of the cathode should be cleaned and oiled occasionally.

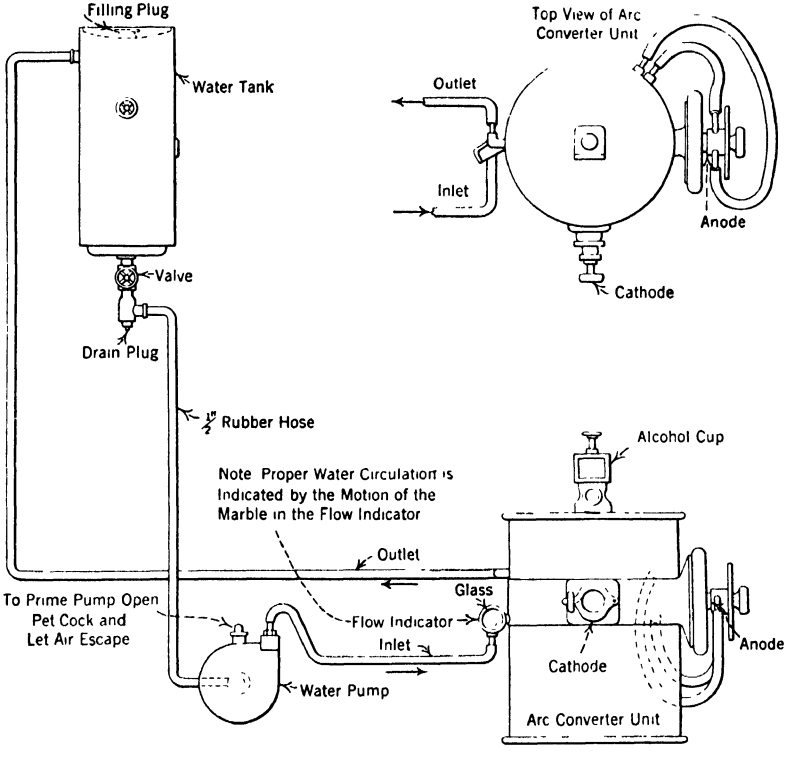

FIG. 409.—The water circulation system for cooling the 2-kw. Federal arc. Salt water must never be used in the circulation system because of its good current conducting property which, in this usage, is detrimental to the arc.

Water Pump and Tank.—A centrifugal pump, shown in Fig. 403, is provided for circulating water through the various water-cooled parts of the arc converter. The pump is driven by a ¼-h.p. 110-volt d-c. motor which is mounted upon an extension of the pump base and forms an integral part of the pump unit.

A 15-gallon tank, shown in Figs. 403 and 409, is provided as a container for the arc-cooling water. It is necessary to use fresh water for the arc converter in order that the anode may be insulated from earth. If salt water should be used, its presence in the rubber hose through which cooling water is supplied to the anode would furnish a relatively

good conductor from the anode to the chamber and the electrodes therefore would be short-circuited.

Antenna Loading Inductor.—The antenna loading inductor, shown in Fig. 403, is a coil of radio-frequency cable wound upon a bakelite framework. It is connected in the antenna circuit between the arc converter and the series condenser from which a connection is made to the antenna. The coil is provided with taps brought out from various points in the winding for the adjustment of wavelength. When a large amount of the coil is connected in the antenna circuit, a relatively long wavelength will be secured; with a small amount of the coil in the circuit, the wave will be relatively short.

A bare copper helix is built into the lower end of the antenna loading inductor in order to provide a means of making very close adjustments of wavelength. A coupled compensation loop, consisting of a single turn of radio-frequency cable, is placed around the lower end of the antenna loading inductor. This loop provides a means of coupling the auxiliary key circuit and the chopper to the antenna circuit, as described in the paragraph relating to these units.

When in operation the voltage on the upper end of the antenna loading inductor is relatively high, approximately 20,000 volts above earth potential.

Adjustment of Wavelengths.—Metal tags are provided for marking the positions of the connections for all the various wavelengths upon which the set is to be operated. Two flexible conductors are supplied for making connections to the various terminals of the loading inductor.

Radio-Frequency Ammeter.—A 0–10-ampere radio-frequency (antenna), ammeter, shown in Fig. 403, is supplied for indicating the current in the antenna circuit. This is a thermo-ammeter with a self-contained thermo-couple.

Relay Key.—The relay key, shown in Fig. 403, provides a means of connecting the arc either to the antenna circuit or to the local " back-shunt " circuit, at the will of the operator. It consists of a movable contact which is controlled by an electromagnet and a spring. When the operator presses downward upon the Morse hand key, the electromagnet is energized and the movable contact then connects the arc converter to the antenna circuit. When the Morse hand key is released, the spring causes the movable contact to connect the arc converter to the local " back-shunt " circuit. The two stationary contacts through which these connections are made are so arranged that the connection with one circuit is made before breaking the connection to the other circuit. This is accomplished by the use of springs and adjusting screws.

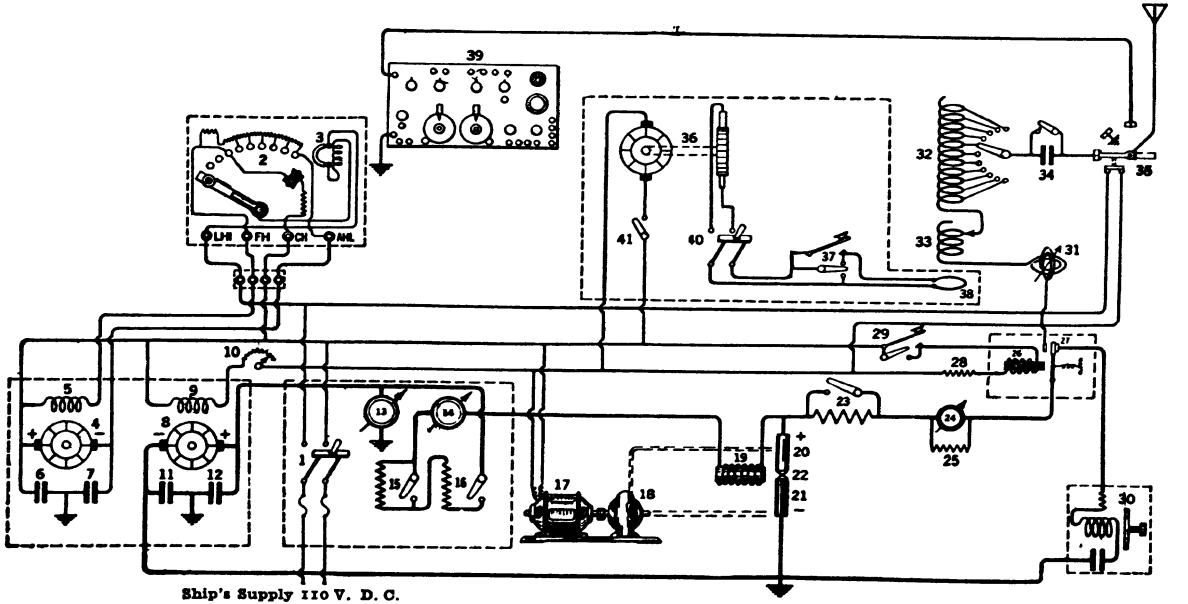

FIG. 410.—Complete schematic wiring diagram of the 2-kw. Federal arc transmitter models K and Q. The back-shunt method of signaling is employed in this transmitter. The numbered parts are as follows:

1. Main line d-c. switch.
2. Handstarter resistor units.
3. Circuit breaker.
4. D-C. motor armature.
5. D-C motor field.
6. Protective condenser.
7. Protective condenser.
8. D-C. generator armature.
9. D-C. generator field.
10. D-C. generator field rheostat.
11. Protective condenser.
12. Protective condenser.
13. D-C voltmeter.
14. D-C ammeter
15. Arc starting resistor.
16. Main arc starting switch with overload release coil
17. D-C motor for carbon drive and water pump
18. Centrifugal pump.
19. Blow-out magnet coils
20. Water-cooled copper electrode (anode)
21. Carbon electrode (cathode).
22. Arc converter
23. Antenna low-power resistor.
24. Antenna ammeter
25. Antenna ammeter protective coil.
26. Relay key.
27. Relay key fixed contact
28. Relay key resistor (current controlling resistor).
29. Morse hand key
30. Complete back-shunt unit.
31. Note varying variometer.
32. Main tuning inductor.
33. Fine tuning inductor.
34. Antenna series condenser and short-circuiting switch.
35. Send-Receive-Ground switch.
36. Motor-driven chopper.
37. Hand key.
38. Compensation loop.
39. Commercial receiver.
40. Chopper switch
41. Chopper motor d-c. switch.

In adjusting the relay key, care should be taken to see that the movable contact makes connection with one stationary contact before it breaks with the other. The amount of motion of the contacts during this period of common connection should be about 1/32 to 1/16 in. The amount of break between the contacts when they are open should be about 1/16 in. After the key has once been carefully adjusted it should require very little further attention, with the exception of an occasional brightening of the contact with sandpaper. A small amount of oil on the moving parts will insure long life and prevent their sticking.

Back Shunt Circuit Unit.—A local, non-radiating oscillatory circuit is supplied in order that the arc converter may have a circuit upon which to oscillate during the intervals between dots and dashes. This local circuit is called the back-shunt circuit (Fig. 405) for the reason that it is shunted around the arc when it is desired to exclude current from the antenna. The manner in which signaling is accomplished by the back-shunt circuit method is described in another paragraph and illustrated in Fig. 410. The back-shunt circuit unit consists of a bakelite panel upon which there are mounted an inductor, a condenser and a resistor.

In operating the set the resistance of the back-shunt circuit should be adjusted so that the radio-frequency current delivered by the arc converter remains constant whether the arc is upon the antenna circuit or upon the back-shunt circuit. This adjustment of resistance is secured by screwing the steel disk in or out and by use of the switch which short-circuits the fixed resistor.

Transfer Switch for Chopper and Auxiliary Hand Key.—A single-pole, double-throw transfer switch is supplied in order that the coupled compensation loop around the bottom of the antenna loading inductor may be connected either to the chopper or the auxiliary hand key, or to the two in series. When this switch is thrown to the right, the coupled compensation loop is connected directly with the auxiliary hand key. Signaling may then be accomplished by the coupled compensation method as illustrated in Fig. 406.

When the switch is thrown to the left the chopper is connected directly to the coupled compensation loop. Signaling with the chopper may then be accomplished by the use of the back-shunt relay key. The circuit is indicated in Fig. 407.

With the switch open, the auxiliary hand key is connected in series with the compensation loop and the chopper. Signals may then be transmitted with the chopper by using the auxiliary hand key. This method is illustrated by Fig. 407.

Chopper.—The chopper, shown in Fig. 403, consists of a commutator

wheel driven by a $\frac{1}{4}$-h.p. 110-volt d-c. motor. Segments of the commutator wheel are connected at regular intervals to a central ring. The chopper brushes are so adjusted that they both make contact with these connected segments at regular intervals during the rotation of the wheel. The two brushes are connected through a suitable switch to the coupled compensation loop which is placed around the bottom of the antenna loading inductor. The commutator wheel serves to alternately open and short-circuit this coupled compensation loop.

A single pole snap switch is provided for starting and stopping the chopper motor.

Auxiliary and Morse Hand Key.—The auxiliary hand key is supplied in order that signaling may be accomplished by the coupled compensation method whenever desired and in case of failure of the back-shunt method of signaling. The manner in which the coupled compensation method of signaling is used is illustrated by Fig. 406.

The auxiliary hand key is slightly heavier than the usual Morse hand key and is equipped with silver contacts $\frac{5}{8}$-in. in diameter.

The Morse hand key is the usual radio telegraph type. By means of it, the relay key is controlled and signaling is accomplished by the back-shunt method, as illustrated in Fig. 410.

Note Varying Variometer.—The tuning with an arc radio transmitter is very sharp and the call may not be heard in case an arc set is calling a station whose receiver is not tuned exactly in unison. In order that the operator may be able to slightly vary the length of the outgoing wave while calling, a note varying variometer is supplied. This variometer, shown in Fig. 403, consists of a stationary coil and a coil which may be rotated within the stationary coil. When the rotating coil is turned in one direction, the out-going wave is lengthened; and when it is turned in the opposite direction, the wave is shortened. By rotating this coil slightly, first in one direction and then in the other, the operator is able to slightly vary the out-going wave and thereby make his call heard by the distant receiver.

Antenna Low Power Resistor.—In order that the antenna current may be reduced when communicating with a nearby station, a resistor (shown in Fig. 403) is supplied, which may be connected in series in the antenna circuit for operation on low power. A shorting switch is mounted on the bakelite cover of the unit. This switch is closed except when it is desired to operate on low power.

Antenna Series Condenser.—This is a mica condenser connected in series in the antenna circuit on all wavelengths below 2000 meters and is placed in the circuit between the antenna loading inductor and the

send-ground-receive switch. The capacitance of the series condenser is .0006 mfd., and it therefore considerably reduces the effective capacitance of the antenna circuit. This permits the use of more antenna loading inductance than otherwise could be used for any given wavelength. The increase of inductance and decrease of capacitance insures steadier operation of the arc converter, especially when used as an undamped wave transmitter on wavelengths between 950 and 2000 meters. For waves over 2000 meters, the series condenser is shorted out of the circuit by means of a switch mounted upon its terminals.

Operation of 2-kw. Arc Radio Transmitter.—Before starting the set for the first time, the various circuits should be tested to see that all electric connections have been made in the proper manner. The following steps also should be taken to start the arc:

(1) Fill the alcohol cup and see that it feeds properly.
(2) Fill the water tank three-quarters full with fresh water.
(3) See that the valves of the water tank are open and that the flow indicates a circulation of water when the pump is started.
(4) See that all moving parts are properly lubricated.

To start the set after a long period of rest:

(1) Close the set supply switch.
(2) Place the Send-Ground-Receive Switch in the sending position. This should start the water pump and the carbon rotating mechanism which are supplied through interlock contacts.
(3) Start the motor-generator by closing the circuit breaker on the starting panel and bring the motor gradually up to full speed. Adjust the generator voltage to about 250 volts by means of the field rheostat.
(4) Start the alcohol flowing so that it drips rather rapidly. Adjust the carbon on the arc so that there is about 1/32 inch motion when the arc is struck.
(5) Close the arc main line switch and strike the arc. Draw it out as long as possible without causing it to break. In starting for the first time, it will be necessary to keep the arc rather short for a minute or two until sufficient alcohol has been decomposed to give a partial hydrogen atmosphere in the chamber. As soon as the arc starts oscillating, the radio-frequency ammeter will indicate current in the oscillatory circuit and the arc should then be adjusted to obtain a maximum reading of this meter.
(6) Close the arc starting resistor switch and adjust the arc for a maximum reading of the radio-frequency ammeter. The alcohol flow may now be reduced to a few drops per minute and the generator voltage adjusted to obtain the desired antenna current.

Arc Adjustment.—After the arc is in operation, it will be necessary to make only occasional slight adjustments of arc length. These adjustments are made to obtain a maximum reading of the radio-frequency ammeter.

Only enough alcohol should be used to obtain full antenna current.

If the arc breaks or goes out it will be necessary to open the arc starting resistor switch and strike the arc again. In case the arc is struck without opening this switch, a short-circuit will result and a trip coil will open the arc main line switch. It is then necessary to lift the handle of this switch to the upper position and reclose it; then strike the arc and reclose the starting resistor switch.

To stop the arc for a short period.—(1) Open the arc main line switch (this automatically opens the arc starting resistor switch).

(2) Put the "Send-Ground-Receive" switch in receiving position.

If it is desired to stop the motor-generator, this may be done by opening either the "Set Supply" switch or the circuit breaker on the motor starting panel.

To start the arc after a short period of rest.—(1) Put the "Send-Ground-Receive" switch in sending position and start the motor-generator, if it has been stopped.

(2) Close the arc main line switch, strike and adjust the arc.

(3) Close the arc starting resistor switch and adjust the arc.

To shut down the set for a long period of rest.—(1) Open the arc main line switch.

(2) Open the "Set Supply" switch (this automatically releases the arm of the motor starting panel by means of the low voltage release coil).

(3) Cut off the alcohol flow.

(4) Place the "Send-Ground-Receive" switch on "Receive" or "Ground," as desired.

To use the chopper with the back-shunt method of signaling.—When it is desired to transmit signals on waves shorter than 950 meters by means of the chopper, the following procedure should be observed:

(1) Throw the single pole, double throw transfer switch to the left and close the double pole switch mounted on the chopper, thereby connecting the chopper to the coupled compensation loop on the loading coil.

(2) Start the chopper motor by closing the snap switch.

(3) Start the motor-generator and arc converter in the usual manner.

(4) Signals may now be transmitted by using the Morse hand key and back shunt circuit in the usual manner. The operation of the chopper is described in another paragraph.

To use the chopper with the auxiliary hand key.—(1) Open the single pole, double throw transfer switch. Close the double pole switch mounted on the chopper and start the chopper motor by the snap switch.

(2) Connect the arc to the antenna circuit by closing the shorting switch on the Morse hand key.

(3) Start the motor-generator and arc converter in the usual manner.

(4) Signals may now be transmitted with the chopper by using the auxiliary hand key.

To transmit undamped wave signals by means of the auxiliary hand key.—When it is desired to send signals, using the auxiliary hand key without the chopper:

(1) Throw the single pole, double throw switch to the right hand position, thereby connecting the auxiliary hand key directly to the couple compensation loop on the antenna loading inductor.

(2) Connect the arc converter to the antenna circuit by closing the shorting switch on the Morse hand key.

(3) Start the motor-generator and arc converter in the usual manner.

(4) Signals may now be transmitted by the coupled compensation method with the auxiliary hand key.

To change wavelength.—(1) See that the arc converter is shut down.

(2) Change the antenna connection on the loading inductor to the terminal which is marked for the new wave.

(3) Change the connection between the bare copper helix and the taps in the bottom layer of the loading inductor to the positions which are marked for the new wavelength.

Peculiarities of an Arc.—(1) The current and voltage relations of an arc converter do not obey Ohm's Law. This law states that an increase in voltage causes a corresponding increase in current. However, in an arc converter any increase in current will cause a decrease in voltage.

(2) In the arc characteristic curve it is shown that a decrease in current causes an increase in voltage across the electrodes.

(3) The critical point or working point is that part of the curve where a small decrease in current causes a large increase in voltage.

(4) Carbon does not obey the usual law of resistance as regards temperature rise.

In any metal conductor, as the temperature rises, the resistance rises, but an increase in temperature of carbon lowers its resistance.

CHAPTER XXV

RADIO DIRECTION FINDER, OR RADIO COMPASS

Introduction.—The travel line of radio waves, as received from a distant transmitting station, can be determined by a radio receiving apparatus, the device being called a *radio direction finder*. The terms *radio direction finder* and *radio compass* are synonymous. The term *radio direction finder* is generally used in the belief that it more truly defines the function of the instrument. The radio direction finder might also be called a *goniometer* or *radio position finder* or *radio pelorus*. In fact, it should be regarded as a pelorus, or position finder, with which bearings may be taken at distances greatly beyond the range of visibility. A pelorus is a device employed to take sight bearings.

Every ship, eventually, will be equipped with a radio direction finder, because it has proved to be an accurate and reliable navigating instrument. Its potential value as a means of preventing loss of life and property at sea has been demonstrated in hundreds of cases.

Electric current is set up in any conductor encountered by the electromagnetic waves of radio energy as they travel through space. This property of electric waves is utilized in the radio direction finder, which operates on the general principle that a signal of maximum intensity will be received with a loop antenna so placed that its plane is pointing at a radio station which is transmitting. On the other hand, if the plane of the loop lies at right angles to the direction of the radio transmitter, little or no energy is picked up and nothing can be heard in the telephones. As the loop is turned, the signals drop out at one position, or null point, which is well defined and is used to determine the direction of the incoming wave transmitted by a distant station. The *observed radio bearing* gives the angular deviation of the direction of the incoming wave from an arbitrary fixed line such as the fore and aft line (keel) of a vessel. A direction finder installed on a land station will give a *true bearing* because the angular deviation of the direction of the received signal from true North may be ascertained.

In the application of radio direction finding to marine navigation, one or two methods may be used, each one being the reverse of the other.

(1) The direction finding apparatus may be installed at fixed stations on shore, called radio compass stations, from which bearings are requested.

(2) The other method is to install the direction finder on the ship, and the observer takes bearings on radio beacon stations. The instrument then may be used to great advantage in a number of ways, among which are the following:

During thick weather in congested waters, ships are often required to wait their turn for long periods before obtaining bearings from the compass stations ashore, because only one ship can be served at a time by the stations on shore. On the other hand, with a direction finder installed on the ship bearings may be taken at any time and as frequently as desired, without interfering with other traffic and without delay.

A vessel equipped with a radio direction finder may ascertain its position in relation to another ship, which may be the means of avoiding disaster during bad weather. The position of a vessel sending out a distress call may be determined, enabling a rescue ship to go directly to her, or the ship in distress may find the bearings of rescuing ships and guide them to her, so that no time will be lost in searching for a ship whose exact position would otherwise be unknown.

The direction finder is designed for installation in the chart room or pilot house of vessels, convenient for the master of the ship, or the navigating officer, to take bearings on the radio beacon stations of the United States Bureau of Lighthouses, or any radio shore station or ship. Inasmuch as bearings taken during thick or foggy weather have the same degree of accuracy as sight bearings in clear weather, the master of the ship can navigate and locate his vessel with the same confidence as with bearings taken by sight. The position of the ship may be accurately determined by taking cross bearings on two or more radio stations. A radio beacon signal may be used as a leading mark, as, for example, in order to enable a vessel to make a lightship anchored in the approach of a harbor or to pass outside of a lightship anchored to guard against dangers off the coast.

The map given in Fig. 411 shows the radio beacon stations located on selected important lighthouses and lightships along the coast. The stations are equipped with apparatus for transmitting a simple, distinctive and easily recognized characteristic radio signal during the continuation of fog or thick weather, by means of which the navigator of any ship provided with a direction finder may take definite bearings to guide or locate his ship, although no object is visible. The beacon stations are in a fixed geographical location, and a practical example of

cross bearings is shown in Fig. 412. Fig. 413 shows a chart of the Port of New York with the three flexible cords indicating the line of

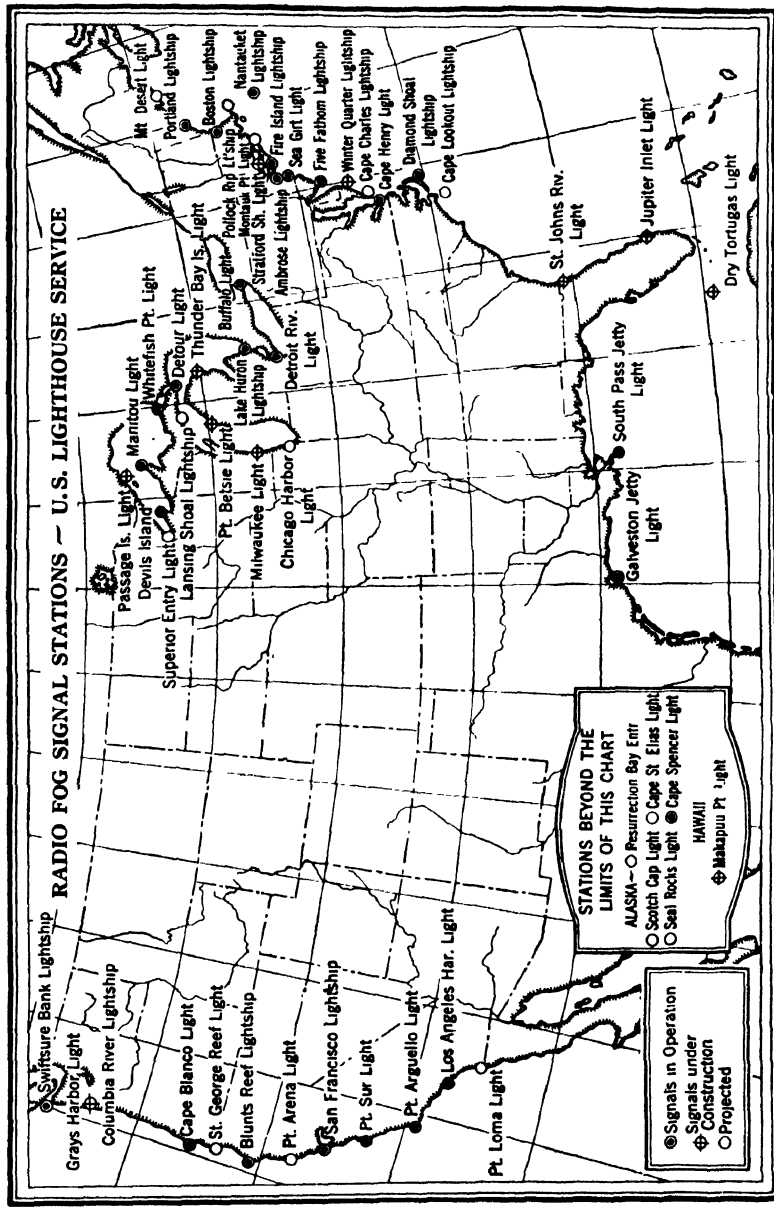

FIG. 411.—A chart of U. S. radio fog signal stations.

direction of the signals of each station intersecting at a point called the *fix*. In this case the *fix* is the point of observation, which is the position

of the ship. The flexible cords are attached to pulleys and weighted to permit of convenient changing. An equisignal radio beacon emits

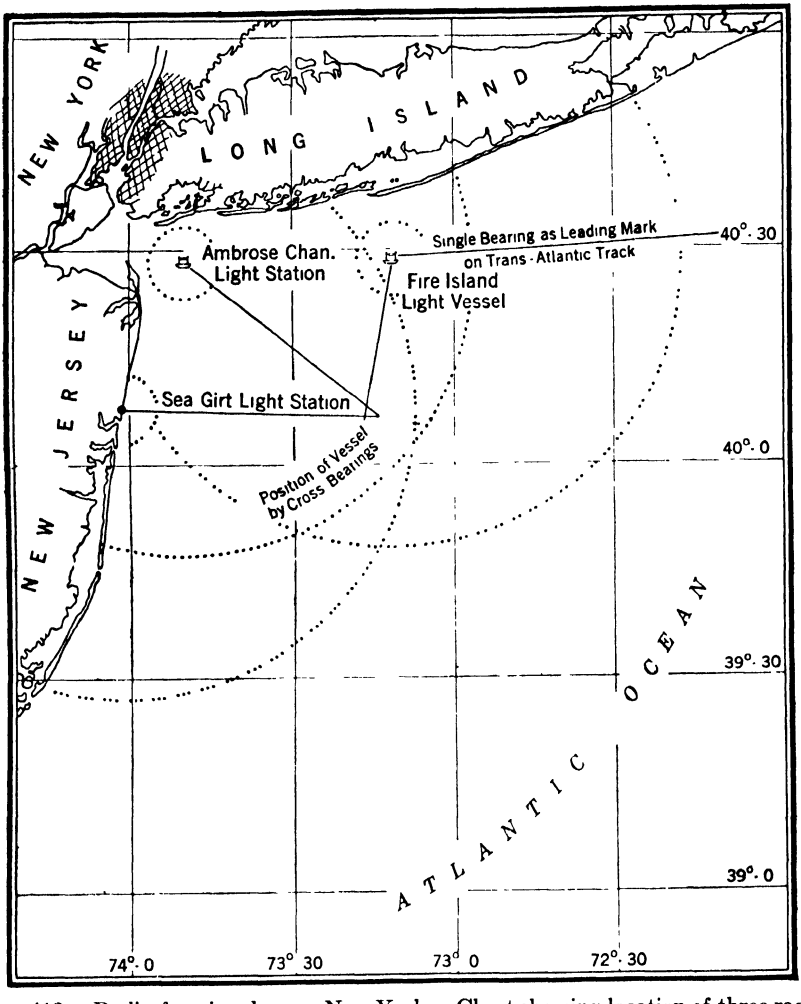

FIG. 412.—Radio fog signals near New York. Chart showing location of three radio fog signal stations in the vicinity of New York, with example illustrating the use of radio signal as leading mark for which a vessel may steer in approaching New York; also example of the obtaining of the position of a vessel by cross-bearings on three radio stations. The distinctive characteristics of the signals from these three stations are indicated by dots on the circles; the larger circles are at the approximate useful limits of these signals.

two distinctive signals which can be received only in certain directions with equal intensity.

The practical utility of the radio compass has been outlined and it is apparent that bearings may be taken with great accuracy between

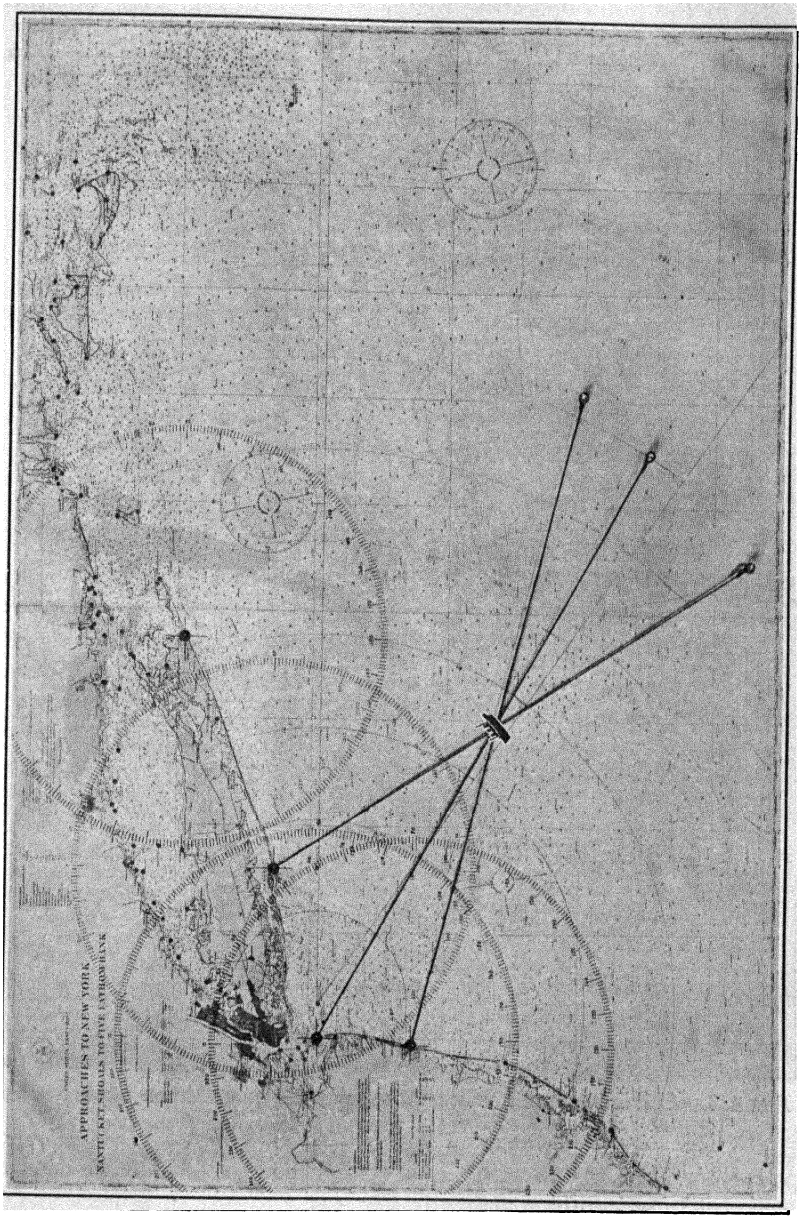

FIG. 413.—Illustrating intersection of three cross-bearings plotted against north and south line to determine position of vessels entering New York harbor.

ship and shore, or shore and ship, or ship to ship, for any distance up to several hundred miles, either in thick or clear weather.

Elements of the Apparatus.—The loop structure of an RCA compass is shown in Fig. 414. The direction finder control and receiver, installed in the radio operating room, is shown in Fig. 415. Another

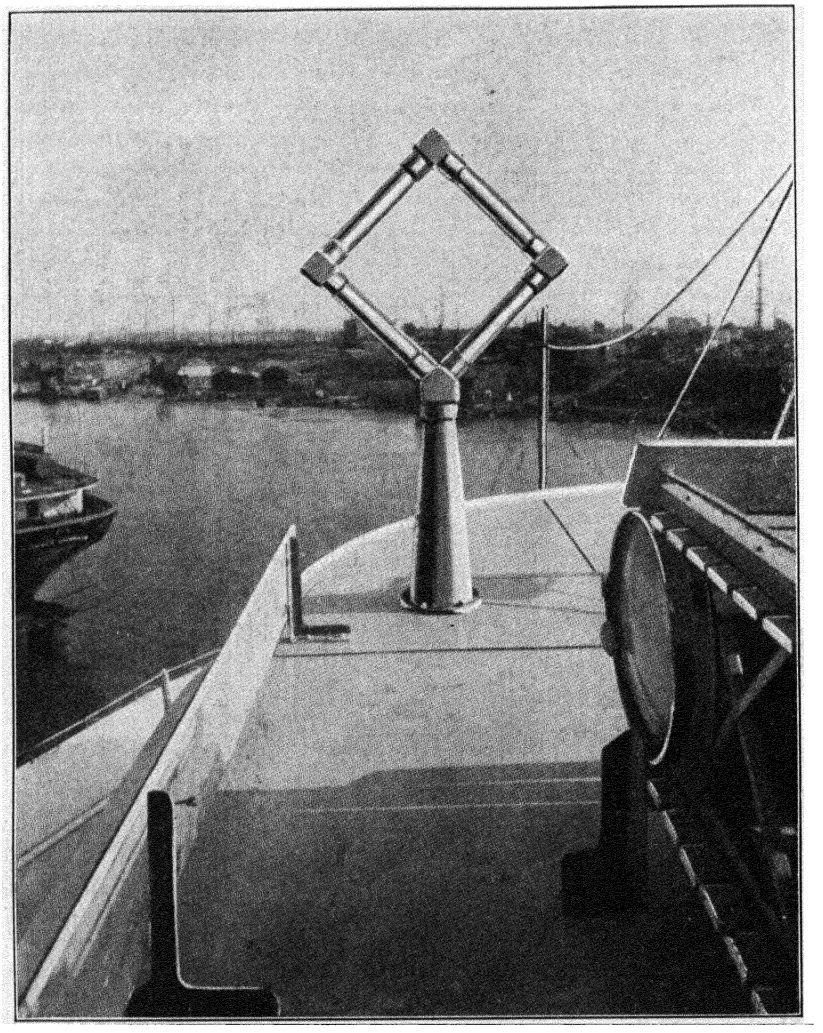

FIG. 414.—Coil antenna of a marine direction finder mounted on upper deck.

type is shown in Fig. 416 with all parts identified. A schematic diagram of a complete assembly is shown in Fig. 417.

Loop.—The direction finder consists of a rotatable loop antenna arranged for outside mounting above the chart room or pilot house,

connected by a shaft passing through the deck to an indicating device, which allows bearings to be taken directly from a compass card or gyro-repeater. The signal from the radio station on which a bearing

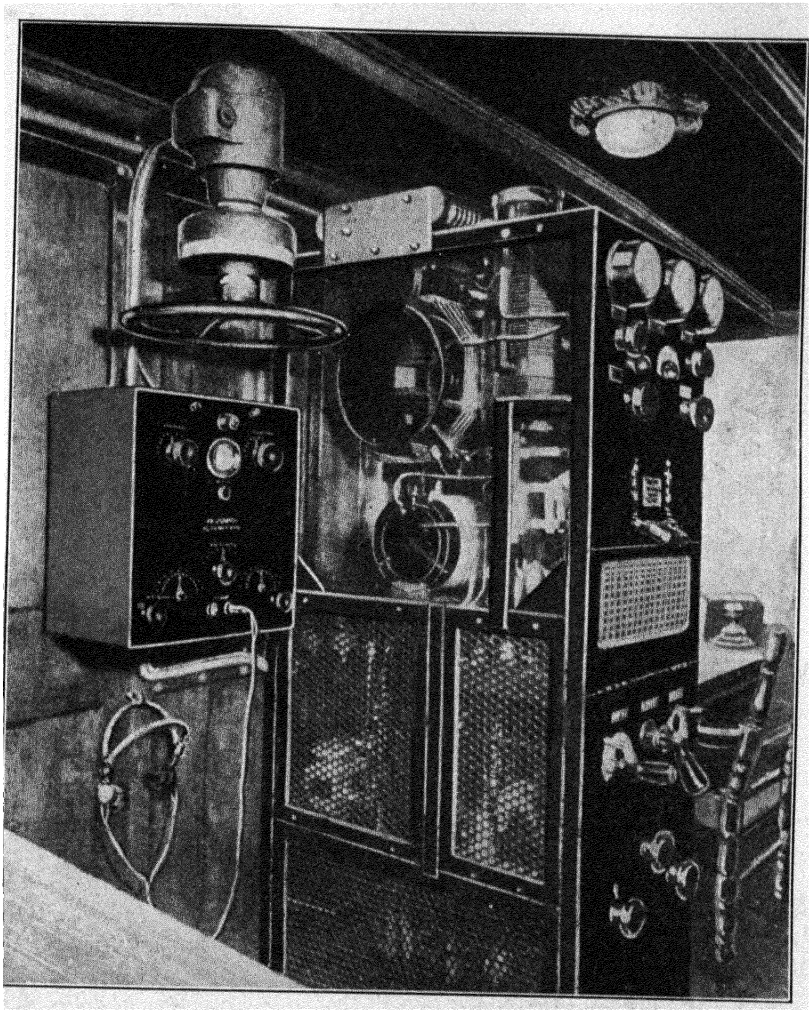

FIG. 415.—Interior of a radio room with the direction finder at the left and the ship's tube transmitter at the right.

is to be taken is picked up on the loop above deck. When the plane of the loop is in the direction from which the signal is coming, the signal is maximum. Conversely, the signal is zero when the plane of the loop is at right angles to the direction of the signal. As the loop

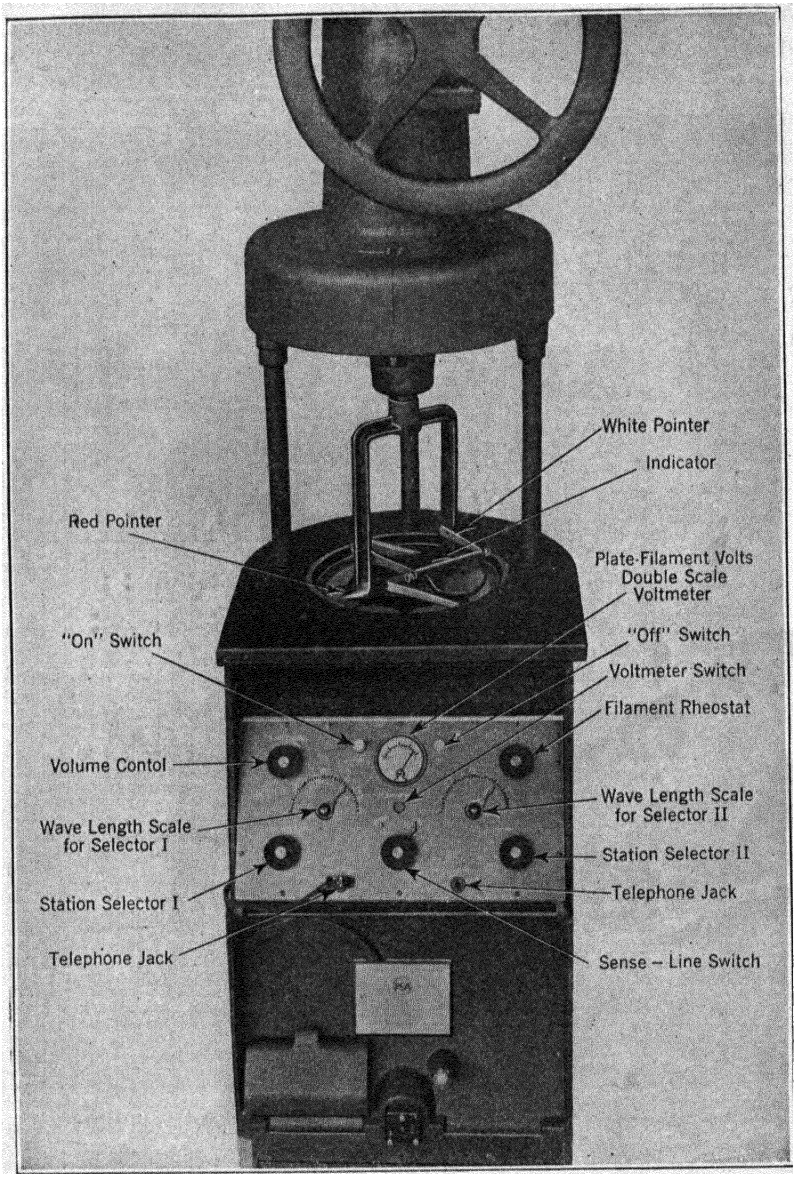

FIG. 416.—One type RCA radio direction finder showing receiver controls and indicator. The rotating element with the red and white pointer is clearly shown mounted directly over the compass scale.

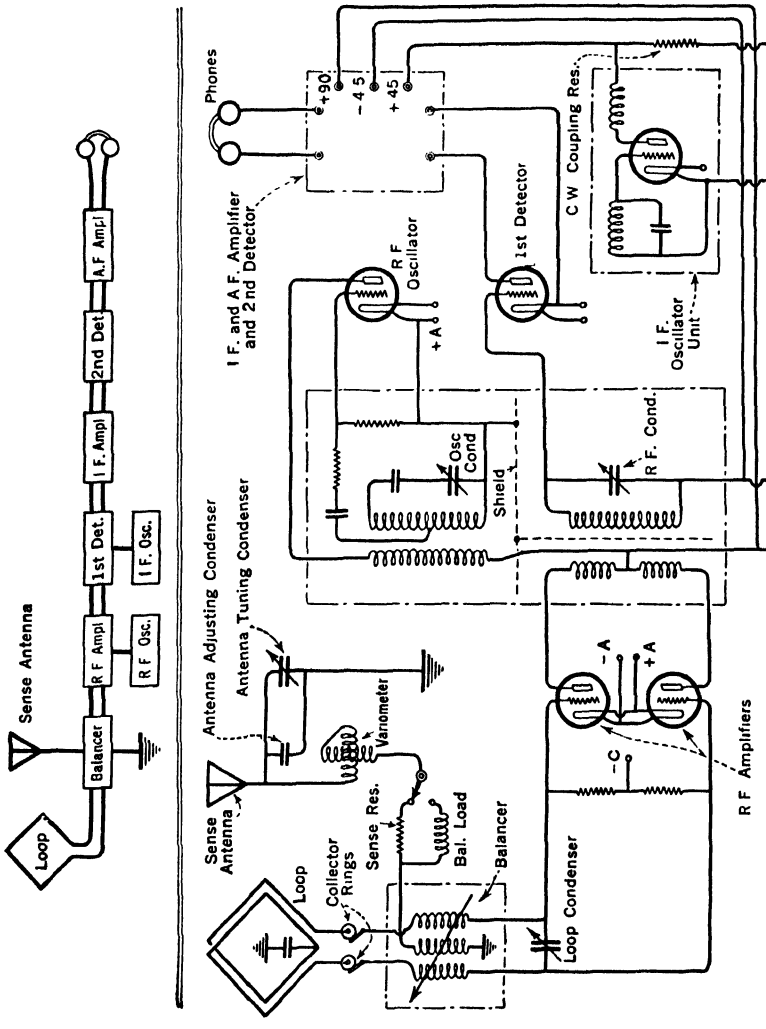

FIG. 417.—Schematic diagram of a standard marine diretion finder which operates in conjunction with a super-heterodyne receiver.

is turned through 180 deg., the manner in which the signal changes intensity is shown in Fig. 418. It is seen that a change of 30 deg. from Position 1 to Position 2 only changes the signal intensity from 100 per cent to 85 per cent, whereas the same movement of 30 deg. from Position 3 to Position 4 changes the signal intensity from 50 per cent to zero. Consequently, to obtain accurate bearings the indicator is set to take readings on the minimum signal.

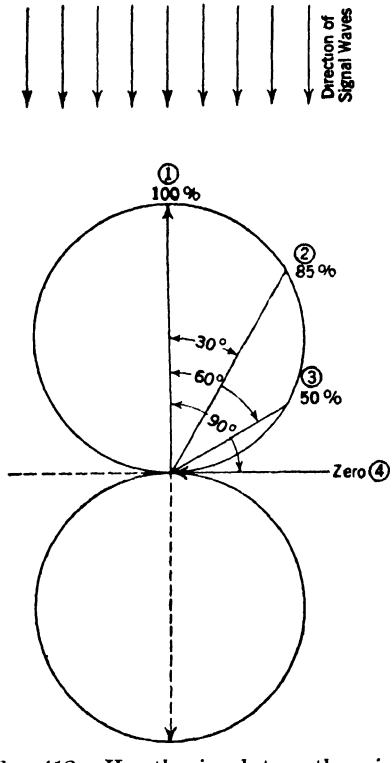

FIG. 418.—How the signal strength varies in intensity while rotating a compass loop is indicated in percentage as shown by the numbers surrounding the circle.

The loop itself consists primarily of a number of turns of wire enclosed in tubes joined together to form a square. This container, which is watertight, is mounted on one corner with its plane vertical and supported on a tripod by means of which it is raised five feet above the deck. The shaft from the loop passes through a universal joint down into the room below. The loop rotates on ball bearings, swinging quickly and easily from one position to another when the hand wheel is turned. The hand wheel is located in the room below, being mounted vertically and geared to the loop shaft with a two to one reduction. Mounting the wheel in this manner has two advantages: one, the ease of handling the loop in a gale, due to the reduction gear between the control wheel and the loop shaft; and the other, that the rolling and pitching of the ship does not interfere with the manipulation of the loop while taking a bearing. To prevent the wind from turning the loop, a lock has been provided on the shaft of the hand wheel. The lock is set whenever the instrument is not in use. The tripod supporting the loop above deck is mounted on a triangular oak crib, 2 in. thick and 36 in. on each side, serving to strengthen the deck while supporting the loop with a minimum spread of the tripod legs.

Automatic Compensator.—Interposed between the loop and the indicator is a mechanical compensator which automatically provides

the necessary correction to offset errors in the observed bearing. The compensator is designed to permit quick and accurate calibration of the compass, when installed, up to plus, or minus 20 deg., every 45 deg. The errors are introduced on account of metal objects aboard the ship which may tend to distort the direction of the wave front, that is, to change the apparent direction of arrival of the radio waves. Corrected radio bearings may be taken from the indicator after the compensator is once adjusted, because the errors will be the same for any given position of the loop. A corrected radio bearing is one to which the calibration correction has been applied.

This calibration and adjustment is usually carried out on the first voyage after the instrument has been installed. It must be done by someone who is familiar with such work. It also requires the close cooperation of the master of the ship. The procedure is to take simultaneous sight bearings with a pelorus and radio bearings with the direction finder on some station while swinging the ship. The difference between the sight bearing and the apparent bearing given by the radio compass will be the error, and will indicate the amount of local wave front distortion. The sight bearing must be taken with great care, as the accuracy in obtaining the true bearing with the instrument after calibration will depend upon the accuracy of the sight bearing taken during calibration. Usually, the maximum error will exist on bearings taken on stations off the bows and quarters. The error on bearings right ahead, or astern, or on the beam, is usually negligible.

At the time the direction finder is calibrated, the ship should be in condition for sea, with booms stowed. Bearings should be taken with the ship in the same condition, as it must be borne in mind that changes in the position of large metal objects, particularly if close to the loop, may cause a change in the direction of advance of the radio waves, and affect the calibration.

Indicator—Compass Card.—The indicator consists of a dumb compass card, mounted so that readings may be taken in degrees from the ship's head, or the card may be adjusted to the ship's course at the time the bearing is taken. Bearings are read by means of parallax lines engraved on a piece of plate glass revolving above the compass scale as the loop is turned. One side of the indicator is equipped with a reading glass and is also marked with an arrow head. This side should always be used for reading the bearing, as it is the side used when the instrument is calibrated. The short pointers, marked "Red" and "White," are used only when the relative direction from which the signal is coming is not known.

The compass is equipped when installed with a Sperry Gyroscopic

Repeater or dummy compass, from which the compass card may be properly centralized. The centralization of the compass card should be checked in several positions, so that no error will occur in any of the positions of the indicator or pointer. The Sperry Repeater is placed in the cover of the receiver, lined up with the lubber line in a correct fore and aft relation with the keel of the vessel.

On ships equipped with the Sperry compass, the pelorus or dumb compass card may be replaced by a live gyro-repeater. Readings with the direction finder are then referred to the true meridian. A *true radio bearing* may be obtained by plotting the angular deviation from true North to the direction of the incoming signal.

Receiver-Amplifier.—The wires leading down through the shaft from the loop antenna are connected to a receiver-amplifier mounted in the base, the entire instrument being self-contained in one unit. The receivers of the present day operate under one of the three general principles, as follows: tuned radio-frequency, regeneration, and super-heterodyne. Any type receiver may be used in conjunction with the radio compass, but it must function to give a relatively loud signal in order that the minimum may be well defined. It must also eliminate other signals or disturbances of whatever sort that would seriously interfere with obtaining an accurate reading. A receiver operating under the super-heterodyne principle will accomplish this end, and with a simplicity of controls. Each control is equipped with a calibrated card marked to show the approximate position of the tuning for given wavelengths.

With the super-heterodyne receiver either spark, c.w., i.c.w., or any modulated signals may be used. A complete explanation of the principles of loop reception, together with a description of the eight-tube super-heterodyne and general instructions in the operation and care of the direction finder equipment is given in the following paragraphs.

How Ship's Bearing Is Obtained by a Direction Finder.—Step-by-Step Procedure for Operating a Direction Finder.—Since the ship's antenna used for radio transmission must be open when bearings are taken with the radio direction finder, a positive interlock is provide between the direction finder and the antenna transfer or opening swi in the wireless room, also, a signal light to notify the radio opera when the direction finder is being used.

The operation of taking bearings consists of listening to a ra signal with head phones and rotating the loop by means of the ha wheel until the signal from the station on which the bearing is be taken reaches a minimum value or null point, which is well defin The bearing of the station from which the signals are received m

then be read directly from the indicator. This gives the line of direction and is called the *bilateral bearing*. In the event that the side from which the signal is coming is not definitely known, provision is made for quickly and definitely obtaining a *unilateral bearing* or sense of direction. A small single wire antenna is used in ascertaining the *sense* of direction and the loop is swung through 180 deg. to determine which side gives the louder signal. The sensitivity of the receiver and strength of signals may be adjusted as desired, and the procedure in detail is as follows:

(*a*) The external control circuit, which permits operation of the direction finder from the radio room, should function in this way: When the master switch on the panel of the receiver is pushed to the " On " position, a pilot lamp installed in the radio room will light.

(*b*) The operator upon seeing this signal will place the lightning switch in the " DF " (direction finder) position, which closes the filament relay in the base of the receiver and places the receiver in operating condition. No filament current is available for the tubes before the closing of the relay.

(*c*) The observer when finished with the compass will push the master switch to the " Off " position, which turns out the pilot light in the radio room, signifiying that the operator may continue his watch.

Operation.—(1) The panel of a receiver, controls and indicator are shown in Fig. 416. Plug the head telephones in either jack (two jacks are provided for an additional pair of head phones, so that bearings may be observed simultaneously by two persons).

(2) Press the button on control panel marked "On." This turns on a light in the radio room, which is a signal to the radio operator to open the antenna. When the antenna switch in the radio room is opened it automatically operates a relay in the battery compartment of the receiver to close the filament circuit. The direction finder cannot be operated until this has been done.

(3) Turn the filament rheostat to a position where the voltmeter reads 3 volts or 5 volts, depending upon which type of tube is used in the receiver.

(4) Turn both tuning controls to approximate wavelength setting of the station. Then turn the switch to position marked "Line."

(5) Now carefully tune Station Selectors I and II, moving the pointers back and forth over the position for loudest signal about three times to determine the setting that gives the most intense signal. It is best to do this when the loop is turned so that the signal is not disagreeably loud. For good bearings accurate turning of Selector I, or the left hand pointer controlling the capacity of the loop condenser, is important.

(6) Set " Balance " pointer at zero.

(7) *For line of direction* (*bilateral bearing*) rotate the loop slowly until a dip in signal strength is noted. Leave the loop in this position and set "Balance" at the position giving minimum signal. Readjust the loop slightly to get zero signal strength. Read the bearing of the radio signal station from the end of the indicator that carries the reading glass. For best results both the balance and the loop must be slowly and carefully adjusted. When taking bearings on stations within five miles it may be desirable to reduce the signal strength. This can be done by reducing the filament voltage, or by a slight readjustment of Station Selector II. By proper adjustment of the balance, bearings can be obtained on beacons within a radius of 100 miles which are definite as to sharpness to one degree, and in some cases to one-fourth degree, or about as accurate as it is possible to adjust the loop.

(8) *For sense of direction* (*unilateral bearing*), if the sense of direction is not known, turn the loop to give maximum response. This is accomplished by turning the loop 90 deg. after determining the line of direction. Adjust the filament control and Station Selector II to give a signal of medium strength. Turn the switch to the position marked *Sense*, noting the strength of the signal. Turn the loop quickly through 180 deg. while the switch is in *Sense* position and note the strength of the signal. If the signal is stronger, the station is in the general direction indicated by the Red pointer. If the signal is weaker the general direction of the station is shown by the White pointer.

Line Sense Features and Sense Antenna.—A test should be made to determine whether the sense indication is correct. The signal should be increased when the Red pointer points toward the sending station and decreased when the White pointer points toward the station. If the opposite is observed the loop leads should be reversed at the tuning condenser and the test repeated to verify the change in position of the pointer.

For satisfactory *sense* observations it is suggested that after obtaining a bearing, the loop be rotated about 10 deg. from minimum position, in the Red pointer direction, the switch being thrown to the *sense* position. If the signal increases, the reading-glass end of the index points toward the beacon. To check, listen when the loop is moved 10 deg. in the opposite (White pointer) direction. Tests should be made from time to time to check the calibration, by taking simultaneous sight and radio bearings when approaching and passing lightships equipped with radio fog signals, or by asking any passing vessel to transmit signals.

Stations used for checking and testing calibration of the direction

finder should be located so as to be entirely surrounded by water, and must be within range of visibility, but not less than one mile or approximately two miles distant from the ship. The intensity of the signal should be adjusted to sound uncomfortably loud on maximum position and the wavelength as close to 1000 meters as possible.

The *sense* antenna should consist of 50 ft. of antenna wire with one end elevated about 35 ft. above the deck on which the receiver is located. The remaining slack wire should be pulled aside at approximately its mid-point, to form a V-shape, on its side, thus >.

Stations Available for Taking Bearings.—The following limitations should always be considered in choosing a station on which to take a bearing.

(*a*) A bearing should be avoided which involves a signal that has traveled any appreciable distance along the shore line. In such cases, the line of separation between the water and land acts as a partial reflection, bending the waves and possibly resulting in an erroneous bearing.

(*b*) A bearing taken on a station separated from the ship by intervening land should be considered only as approximate.

(*c*) A bearing taken on a station more than 150 miles distant should be considered as approximate.

(*d*) On bearings taken shortly before or after sunrise or sunset errors due to so-called *night effect* may be observed. These errors are manifested by rapid swinging of the minimum so that the signal station seems to be changing its position while the bearing is being taken. Bearings taken under such conditions cannot be relied upon. Errors due to *night effect* are usually negligible at distances of less than 100 miles.

There are four classes of stations which are available for taking bearings.

(1) Special Radio Fog Signal Stations: These special radio fog signals should be used whenever available in preference to any other station, for the following reasons: They have been erected by the United States Government and various other governments, specifically for navigation aid in connection with radio direction finders. They emit a characteristic signal which may be readily distinguished by anyone without knowledge of the telegraph code. They are so located on lightships and at lighthouses that bearings in most cases will be all over water. The published positions of these special radio fog signal stations may be depended upon as accurate. They are operated continuously during fog or thick weather.

(2) Radio Transmitters associated with the United States Naval Radio Compass Stations.

(3) Other commercial and Government shore stations.

(4) Ships (under way).

To obtain bearings on stations in classes 2, 3 and 4, it will be necessary to call the radio operator to identify the desired station by its call letters. When taking bearings on shore stations in class 3, it should be borne in mind that the published positions of such stations in many cases are only approximate. Also, such stations are likely to be separated from the ship by intervening land, which may cause swinging of the apparent direction of the station from the true reading. In general, bearings should not be taken on stations in class 3 unless the station is known to be located directly on the shore.

Important Tests and Maintenance of the Direction Finder Equipment.—The entire radio compass is self-contained in one unit, all batteries being installed in the bottom of the pedestal housing.

(*a*) *Storage battery equipment.*—The following elements should be inspected at least once each week:

(1) Turn on the filaments and determine if the voltage can be brought up to normal. (To do this requires operation of the antenna switch in the radio room which in turn operates the relay in the battery compartment of the direction finder receiver and is therefore a check on the relay.) A receiver of the type using 199 tubes will require a normal voltage of 3 volts, and other receivers may employ 201-A tubes which require a normal filament voltage of 5 volts.

(2) Measure the voltage of the " B " battery, which should not be less than 60 volts. The " B " battery voltage may be read on the upper scale of the voltmeter on the control panel by depressing the push-button mounted below the meter. If the " B " battery reads less than 60 volts it should be replaced. The $4\frac{1}{2}$-volt " C " battery should always be renewed whenever " B " batteries are renewed.

(3) The storage battery used for the filaments is so arranged that when the "On-Off " switch on the control panel is in the " Off " position this battery is on trickle charge. Therefore, the battery is being constantly charged at a slow rate while not in use. The rate of charge is normally adjusted to provide for average use of one hour per day. The charging resistance is tapped so that three charging rates are provided, depending upon the length of time the compass receiving set is in operation, each rate being arranged to recharge the battery for one, two, and three hours of daily operation. In an emergency three dry cells connected in series may be used as an " A " battery in the receiver using the 3-volt type tubes, if the storage " A " battery should become inoperative. A receiver using the 5-volt type tube will require two banks of dry cells connected in parallel, each bank to comprise

four dry cells connected in series, to operate the receiver in an emergency.

A sufficient amount of distilled water should be added to the "A" battery every three months to bring the level of the solution within one inch of the top of the container. The storage " A " battery is of the low specific gravity type, about 1150 at full charge. The solution of electrolyte in the battery is covered by a layer of oil to prevent evaporation, and no attempt should be made to test the state of charge with a hydrometer, as it would only draw off oil. The condition of the battery must be determined by the voltmeter on the control panel.

(4) A main double-pole service switch is provided in the top of the battery compartment, in the pedestal base. The switch should always be open while the ship is in port, or at any other time when current is not available for charging purposes. This switch disconnects the direction finder receiver from the ship's 110-volt d-c. power mains and opens the battery charging circuit. It is imperative that this switch be opened if the ship's lighting circuits are connected to shore lines, which may be either a-c. or of incorrect polarity d-c., for charging the battery. Before connecting the current supplying the battery charging equipment, it should always be tested for polarity, and the negative line connected to the negative electrode of the battery.

(*b*) *Testing the Super-heterodyne Receiver.*—After the receiver is set in operation, adjust the filament voltage by means of the filament rheostat control. The pointer attached to Station Selector I, which tunes the loop to the desired wavelength, is set at the indicated wavelength on the scale; then slowly vary Selector II, which controls the oscillator frequency, back and forth near the same wavelength band. After the signal is heard both selectors are again adjusted for maximum signal. The rotation of the loop also will vary the signal strength. If interference is experienced, it can be avoided sometimes by setting the pointer of Selector II from 10 to 30 divisions from the first setting. The test for oscillation with the super-heterodyne receiver is to rotate the pointer of Selector II across the entire scale to cover the full wavelength range and at the same time repeatedly touch the stator plates of the oscillator condenser, which is connected to the shaft of Selector II pointer. A click should be heard each time the finger touches the condenser plates. In the event that the oscillator tube circuits do not oscillate, it will be necessary to interchange several tubes in the various sockets until the best arrangement is found.

(*c*) *Troubles and Remedies.*

(1) If the filament voltmeter does not read (when the antenna switch is opened) see if the relay in the direction finder filament circuit

closes. This relay is operated by the 6-volt " A " battery in the radio room. If it does not close, the batteries in the radio room are weak, or the auxiliary contact on the antenna switch is dirty. If the relay closes, but the filament voltmeter does not read, then the relay contacts are dirty, or the filament battery in the direction finder is run down.

(2) If the filament voltmeter reads normal, but the receiver sounds dead, then inspect as follows:

See that the "B" battery voltage is normal.

Substitute a good tube in turn for each of the tubes in the receiver (these tubes use a thoriated filament which often does not burn out at the end of its useful life, but has merely lost the capacity to supply electron emission; therefore, the fact that the filament lights does not mean that the tube is good).

See if all connections to all batteries are in place and tight, and no wires broken under the insulation where not readily seen. Voltmeter test at the extreme end of any connecting leads will give a quick indication.

See if brushes on the loop collector rings are making contact.

Replace protective lamp in " B " battery circuit with a spare lamp. This lamp is inserted in series with the negative " B " circuit and protects the tubes from damage should the filament and plate circuits become accidentally crossed. It acts as a fuse because it will burn out if subjected to a voltage much in excess of the normal 3.6 volts at which it is rated. This protective lamp is an ordinary Eveready flashlight bulb No. 1193 3.6 volts. If burned out, the plate circuit will be opened and the receiver will be inoperative. Any persistent burning out of the lamp indicates a short-circuit, which must be cleared. The trouble, however, may be in a defective tube or wiring.

If the receiver is noisy, look for loose connections, particularly at battery connections and at collector rings. See if the collector rings are clean and the brushes are making good contact. Noise may also be caused by a defective " B " or " C " battery.

(*d*) *Practical Consideration Affecting Direction Finder Operation:*

(1) The location selected for the direction finder must be such that the loop assembly can be mounted directly over the receiver and provide the greatest convenience in taking observations with a minimum exposure to disturbing effects produced by the ship's rigging and equipment, outlined in the following paragraph.

(2) The center of the loop should be at least 6 ft. from large metal objects such as masts, funnels, stays, and so on. Current may be induced in a direction finder by wires forming closed circuits such as

stays, whistle cords, and so on, which have a natural wavelength or fundamental period considerably less than the working wavelength of the loop. This current is 90 deg. out of phase in the compass loop with the induced current, due to the signal, and therefore has the effect of decreasing the sensitivity of the instrument. The effect apparent to the observer is the broadening of the *minima.*

Inasmuch as the masts, stays, and so on, are located in various directions from the compass loop, they sometimes have the effect of shifting the apparent arrival of the signal. Therefore, as has been explained in preceding paragraphs, the process of calibration involves compensating for this apparent shift in signal direction and adjusting the automatic compensator to obtain a sharp *minima* at all angles. Objects causing the error should be permanently grounded, and, if possible, all long wires should be broken up with insulators so that they may not have a natural period near the direction finder wavelengths. This applies only to whistle cords, signal halyards, and similar wires, and does not affect the standing rigging unless the loop of the direction finder is enclosed within a loop formed by the rigging.

When two stays are fastened to a mast, they should be connected together with a wire near the apex, and another wire should be connected between the lower end of each stay and the ground, or hull of the ship. This arrangement of making a continuous electrical conductor of the stays terminating at the ground is called *bonding.*

Electrical disturbances caused by the ship's equipment, such as the induction produced by sparking in the generators, motors and control apparatus, must be minimized. The direction finder is made entirely of non-magnetic material, and has no effect on the ship's compass, provided it is not located closer than three feet.

Principles of Directional Radio Reception with Loop Antenna.—The usual method of inducing a high frequency alternating current in a loop antenna is to use the loop winding as part of or all of the inductance of an oscillatory circuit. In Fig. 419 there is shown a simple detector circuit coupled to an oscillatory circuit comprising the loop *ABCD* shunted by the variable tuning condenser *C*2. Let us assume that the loop is constructed similarly to the loop illustrated in Fig. 420, called the box type.

Before entering into a detailed explanation of the radio compass circuits, the simple action of the loop antenna should first have consideration. Let *A* and *B* represent two sides, respectively, of a single loop direction finder, with the arrow indicating the line of direction of the flux in a passing electromagnetic wave.

When the loop lies in the same plane as the incoming signal wave,

that is, pointing toward the distant radio transmitter, maximum induction takes place. By studying the diagram, it can be seen that the current induced by the electric field in side *A* is in advance of the current induced in side *B*, and if the two sides are spaced a certain distance apart (which they are in actual construction) the current induced in side *B* will be effective an instant later than the current in side *A*. Wherefore, a current will flow around the loop *A-B* as a result of the two induced e.m.f.'s.

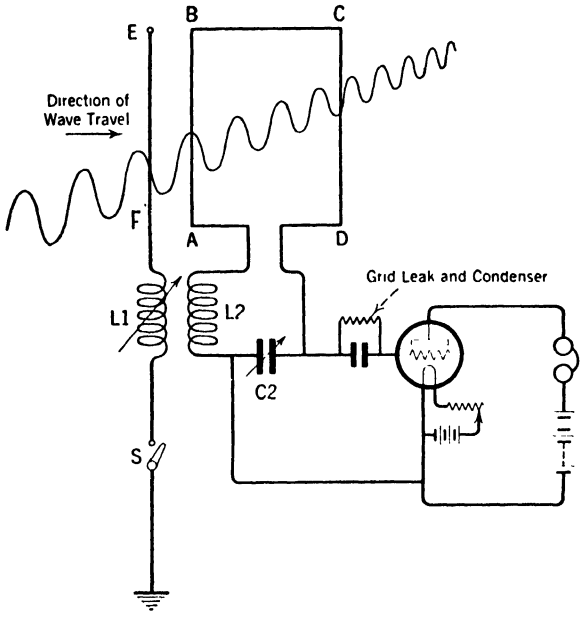

FIG. 419.—A circuit diagram of a direction finder having directional (unilateral) characteristics.

In the lower drawing of Fig. 420 the plan view of the loop, as shown by position 1, indicates the position of the loop in a plane at right angles to the wave front of the incoming signal; or, as it is more commonly expressed, *the loop lies parallel with and points toward the direction of the wave travel.* The variable condenser across the loop terminals is used to tune the loop circuit to resonance with the signals from a chosen station. The resulting induced signal current then flows to the detector to be translated into audio-frequency current suitable to operate the head telephones.

If the loop *A-B* is turned on its axis so as to make the plane of its winding form an angle, which is less than a right angle, with the line of direction of the wave, as in position 2, then it can be seen that there will be a small difference of time between the arrival of the wave at *A* and at *B*. The time difference becomes smaller and the currents induced in the loop become correspondingly less as the plane of the loop approaches that position where it is at right angles to the travel of the wave, as in position 3. In that position, all points of the loop will be reached by the wave at the same instant; or both sides, *A* and *B*,

are acted upon equally by the electromagnetic forces and the induced voltages in *A* and *B* will be equal, but opposed in direction, and therefore will neutralize.

This property of a loop antenna of receiving a larger proportion of radio energy along some directions than others is called its *directional properties* and the loop is then known as a *directional antenna.*

In rotating a loop about its axis one complete revolution or 360 deg., two maxima and two minima points will be found. Since a maximum signal will be heard whether side *A* or side *B* points directly toward the distant sending station, the loop cannot be utilized to indicate the exact direction from which the waves are coming. Owing to this fact a loop antenna is known as a *bilateral antenna,* for a greater percentage of the radio signal waves is received in angular regions 180 deg. apart than in other directions.

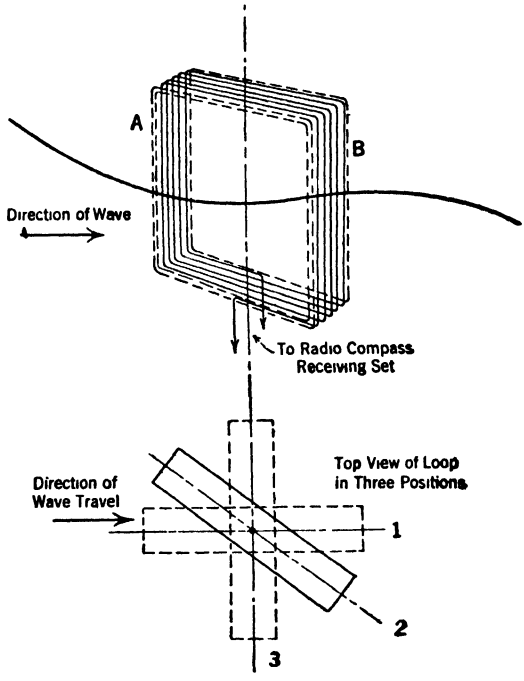

FIG. 420.—As shown by this drawing a maximum signal will be heard with the loop in position 1, whereas when in position 3 a minimum or no signal will be heard.

The bilateral characteristics of a single loop will give the line of direction, but not the exact side from which the waves are advancing. This is known as the 180 deg. ambiguity, or uncertainty.

In rotating the loop it will be noted that for a given variation of the angle, the signal strength varies by a greater amount when the angle is close to 90 deg. than when it is around zero. Because of this fact the compass will be more sensitive if adjusted to a zero signal instead of a maximum signal. On the other hand, the sensitivity of the human ear is usually keener in discriminating between the presence of a very weak signal and that point where the signal drops out than in detecting the changes in the signal strength as

it increases and decreases a few degrees in the region of maximum loudness.

General practice is to turn the loop in a position where no signals at all are heard, thus providing a more accurate adjustment. Under these conditions the plane of the loop will not be parallel to the direction of the wave travel, but at right angles as shown by position 3 in Fig. 420.

It must be remembered that on nearby signals only a very small received current may be necessary to operate the detector, but if the induced energy in the loop is less than that necessary to cause the

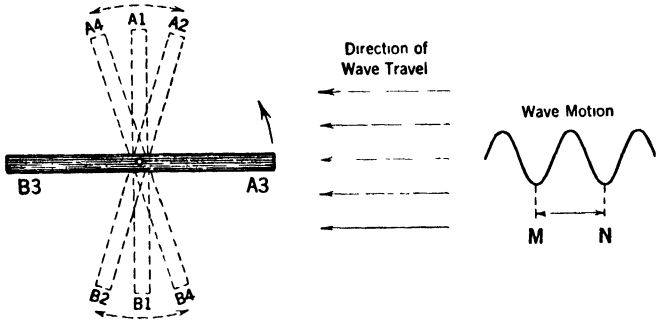

FIG. 421.—A top view of a loop or coil antenna. When it is in the position A3, B3 a signal of maximum intensity is received, whereas when it is rotated to occupy positions shown by the dotted lines, signals of minimum intensity or no signals at all are heard.

detector tube to function, no signals will be heard in the telephones; this, of course, refers to the minimum position of the loop.

Adjusting for Minimum Signal.—A few brief observations are given in the following paragraph about the theory of the propagation of radio energy which will serve to connect with the more detailed explanation of loop reception.

A radio wave in its propagation is always illustrated by a sine curve which tells us that the electric waves alternate through space and these electromagnetic forces are continually passing through an infinite number of instantaneous values. The energy rises from zero to maximum and diminishes again to zero in one direction, then reversing to undergo a similar rise and fall in the opposite direction for each complete oscillation, as shown by the curve of wave motion in Fig. 421. One cycle or one periodic disturbance of a radio wave is known as its wavelength and is the distance between two points in similar phase in two successive cycles; for example, the distance M to N is the wavelength. If the

wavelength of M to N is 600 meters, then this cycle is performed in $\frac{1}{500,000}$ second.

If the loop is held in a fixed position so that its turns of wire do not lie in a plane with the direction of the wave travel, indicated by the long arrows, a minimum amount of induction will take place for the following reason:

The behavior of a magnetic field of force, as noted in the theory covering electromagnetic induction, is such that when a magnetic field of varying magnitude threads through or cuts a conductor, an alternating e.m.f. is induced in the conductor, and the strength of this induced voltage is determined, for one thing, upon the angle at which the magnetic lines of force cut the conductor. Then, if the compass coil is turned to occupy position A_3B_3 with its plane parallel to the direction of the wave travel, indicated by the long arrows. it will be threaded by the maximum number of lines of force.

As previously stated, the magnetic field will strike side A_3 a moment in advance of side B_3; that is, the crest of the wave reaches one vertical side of the coil when the crest has either reached or already passed the other vertical side of the coil, so that the voltages induced in either side are unequal; therefore, an alternating current will flow through the coil, and a loud signal will be heard in the headphones.

On the other hand, when the plane of the coil is turned at right angles to the incoming wave, as in position A_1B_1, the magnetic lines of force do not thread through the coil, but strike all portions of the coil at the same instant and induce an e.m.f. in both sides A_1 and B_1, which neutralize each other, resulting in no induced voltage and consequently no current.

If the loop is swung from position A_3B_3 in a counterclockwise direction, the signal will greatly decrease in intensity as the loop approaches position A_2B_2 and will entirely drop out in position A_1B_1. As we continue to rotate the loop, sounds will again reappear when the loop comes to position A_4B_4, increasing in loudness until maximum signal is recorded at position B_3A_3. The loop has been turned one-half revolution, 180 deg., and two maximum points have been found. If the rotation of the loop is continued for the next half revolution, the same effects will be observed; namely, the signals will begin to disappear in positions B_2A_2 and B_4A_4, and it can be assumed that zero or minimum signal is in position B_1A_1. Thus two maximum and two minimum points are obtained during one revolution of the loop.

For all practical purposes it is seen that the zero position can be considered anywhere between the limits A_4A_2 or B_2B_4, as indicated by the dotted arrows. Since it is impossible to obtain the position for

absolute zero signal in practice, the mean or average value of the signal strength, as determined by the ear, at the positions just mentioned, is taken as corresponding to the theoretical zero position at A_1B_1. This may be accomplished with sufficient accuracy by swinging the loop to either side of zero position until the signal is barely audible, and then taking the mean reading of these two positions. It is obvious that to induce a minimum current in the loop giving a very weak signal in the receivers, the region indicated by the dotted arrows must be quite limited.

By employing a receiver, the minimum current received in the loop may be made very small, thus increasing the sensitivity of the apparatus. By then increasing the signal strength through one or more stages of radio-frequency amplification before detection, and one or more stages of audio amplification after detection, greater accuracy and effectiveness of the direction finder will be obtained. In other words, the minimum and maximum points will be more clearly defined.

When the indicator of a single coil direction finder, just described, is mounted over a compass card, the manipulation of the loop will give only a bilateral reading, with an uncertainty of 180 deg. as to the exact direction of the sending station.

To Plot in Graphic Form the Induced Current in a Loop Rotated 360 Deg.—The Figure-of-Eight Diagram.—We know that the strength of the signal is dependent upon the relative position of the coil with respect to the direction of the incoming signal. The purpose of the following paragraphs is to show that the variation in the induced voltage in the compass coil, while it is turned one complete revolution, may be graphically illustrated. The curve representing the voltage or current changes in the loop will have the appearance of the figure eight (8) because it comprises two tangent circles, shown in Fig. 422.

In order to understand the principle upon which a radio compass having unilateral characteristics is operated (to be explained in a following section), not only will it be necessary for a reader or student to have an elementary knowledge of how the current changes in value as a loop is rotated about its axis, but some means must be employed to illustrate this change graphically. By very little application and study the figure-of-eight diagram will be found relatively simple in conveying the action in picture form, just as is the use of the sine curve in illustrating a cycle of alternating current.

Let us begin to plot the curve with the loop in the position to receive maximum signal, as shown in Fig. 422, the direction of signal wave being designated by the arrow.

To compare the intensity of the signals for the different loop posi-

tions, an arbitrary value of 15 units may be assumed for the maximum unit current strength, with the loop in line with NM, which is in the same plane as the incoming signal. The unit current strength will progressively diminish to zero from 15 units when the loop is turned from position NM until it lies in a direction as indicated by GF.

The purpose of two circles, one indicating negative units of current and the other positive units of current, will first require explanation. If the loop is turned 180 deg., with the side of the loop marked N always pointing in the direction toward the incoming wave (that is, so this side of the loop will be acted upon before the other side M), then the

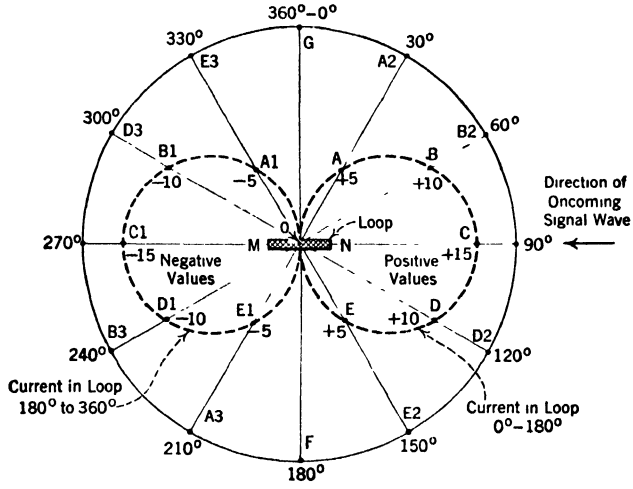

FIG. 422.—The figure-of-8 diagram. When a loop is rotated 360 deg. the strength of an incoming signal will vary in the manner indicated by the two inner circles. This provides a bi-lateral characteristic.

alternating current induced in the loop may be called a *positive* current. Now, when the loop is turned the second half revolution, the side N will occupy the position M formerly occupied, and this time side M will be acted upon prior to N. The alternating current now induced in the loop is identified by a relative term, being called a *negative* current. The terms are merely relative and have no other significance than to indicate that the alternating current flows back and forth through the loop windings in both instances, but the general movement is reversed. That is, if we assume an alternation of current to be flowing upward in side N when N points toward the arrow indicating the wave, the current would at that very instant be flowing downward in side N, if N were reversed to occupy the position of side M. This

change in the general direction in which the alternating currents flow through the coil should be simple to understand, because it depends solely upon which side of the loop is cut first by the advancing electromagnetic field. Later it will be shown that the whole principle upon which unilateral bearings are obtained is based upon this reversal or change in which the alternating currents flow. Technically it would be said that the current changed in phase.

To proceed with the plotting of the signal intensity curve: Begin with the loop in zero position, in line with GF, and rotate the loop from 0 to 180 deg. and at the same time plot the *positive* current units on the circle on the right with the side N always in the general direction toward the signal arrow. With the loop in line with GF place a dot at O where the two dotted circles are tangent; this indicates that no signal is being received. Now move the loop 30 deg. in the line with A_2A_3, assume the signal strength to be 5 units and place a dot at A indicating (positive) + 5 units. In the same manner proceed to locate other positions as follows: Move the loop to 60 deg. in line with B_2B_3 and the signal intensity will increase to + 10 units represented by B, then to 90 deg. to line up the loop with line NM, representing maximum signal strength at point C with + 15 units, the value which we arbitrarily selected; move the loop to 120 deg. in line with D_2D_3 and the unit strength will be + 10 as represented by point D, the same value as it was at 60 deg.; advance to 150 deg. in line with E_2E_3, indicating the + 5 units at point E; the loop is now turned the last 30 deg. or to 180 deg. in line with FG, with the side N of the loop pointing toward F. Zero signal will be received, indicated at O (where the circles are tangent).

The right hand dotted circle indicating the induced current in the loop when rotated from O to 180° is now complete and we may begin plotting the signal intensity for the second half revolution, but it must be borne in mind that the alternating current will reverse its general movement through the coil, and therefore the points of location from 180 to 360 deg. will be plotted on the left hand dotted circle and the units will now be identified with *negative* values. With the loop reversed, that is, with side N in the position occupied by M, and M in the position occupied by N, move the loop in steps of 30 deg. and plot the negative units as indicated on the left hand circle. This gives another maximum position because the loop still lies in the same plane with the incoming wave. Maximum signal is again received as designated by − 15 units at point C_1.

It should now be clear how the two minima, at 0 and 180 deg. respectively, and the two maxima at 90 and 270 deg., are obtained and then illustrated in a figure-of-eight pattern or diagram. Observe that

throughout the explanation the frequency or number of cycles of alternating current is not involved, for the curve merely shows the variations in the effective strength of the signal in the receiving apparatus when the loop is rotated one complete revolution.

The single coil radio compass of this type may be read with reasonable accuracy providing the general location of the distant transmitting station is known.

Bearing Obtained with a Single Loop Direction Finder.—In the case of a ship fitted with a single loop radio compass, the operator may find the position with a small percentage of error by taking cross bearings on two or more radio stations transmitting, as shown in the diagram of Fig. 423. Two methods are available:

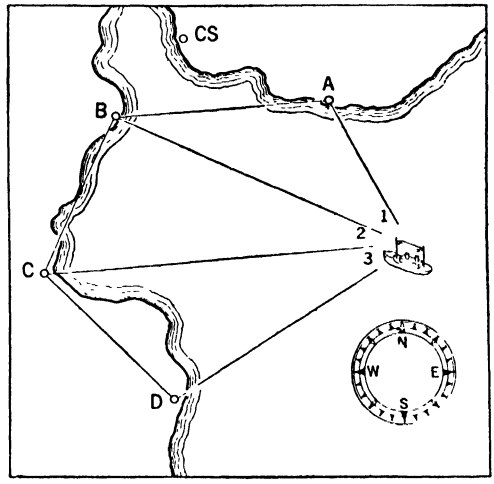

FIG. 423.—A vessel's position (bearing) is obtained by the method suggested in this drawing.

(1) The first method is where the vessel is equipped with a direction finder. Transmitting stations *A*, *B*, *C* and *D*, called beacon stations, are situated at different locations, which are charted and known to be geographically correct. Each station is identified by the characteristic signal it transmits. The observer should obtain the angles 1, 2 and 3 from the four readings when manipulating the loop, and then by plotting the locations *A*, *B*, *C* and *D* from the given angles the position of the ship is determined. The lines of direction of two or more bearings will intersect at a point, called the *fix*, which in this instance is the point of observation, or the position of the vessel, because the plotting of the bearing has been carried out on board ship.

(2) The second method is where the operator sends out a call using the ship's transmitter. The stations *A*, *B*, *C* and *D* may in this case be equipped with direction finders, being compass stations. The same letters and locations are used in both methods to simplify the explanation, but it should not be assumed that a compass station and a beacon station are situated at the same location.

Method 2 is the reverse process of the method outlined under Method 1. The operators at compass stations *A*, *B*, *C* and *D*, by

manipulating their direction finders, can obtain the angles which are made by their individual bearings, as indicated by the direction of the lines pointing toward the ship, with respect to the North and South line. The angles with the North and South line are reported by each station by telephone to a Central Compass Station located as *CS*, where the angles are plotted and the position of the ship is determined. The Central Compass Station may then telephone or telegraph the position of the ship to a transmitting station at the same or some other location. The latter station will then call the ship which requested the bearing and report the ship's position to the operator on board.

When a vessel equipped with a single loop compass is nearing port, the exact direction of an incoming signal usually becomes known when communication is established between ship and shore, or vice versa.

When a vessel is far out at sea, however, a bearing may be desired and the operator can determine the line along which the radio waves from a sending station are acting, but may not know definitely the direction from which they are coming. To eliminate this uncertainty, the modern compass is equipped with both a loop antenna and a vertical wire antenna, which function in conjunction.

Bellini-Tosi Goniometer.—The form of direction finder described in the foregoing paragraphs employing a single loop is probably the simplest construction, but it has certain deficiencies which have been indicated. In order to enable the operator to obtain sharper minima and maxima positions a direction finder was developed by Bellini and Tosi, consisting of two fixed loops with their planes at right angles, the coil assembly being mounted above deck in the usual manner.

One loop lies in a plane with the keel of the ship and the other perpendicular to it, or thwart ship. The conducting wires leading from the terminals of the two loops, A_1 and A_2, are carried from the upper deck structure down to the radio room, or pilot house, as shown in Fig. 424. They are connected respectively in series with variable condensers C_1 and C_2 and also with field coils L_1 and L_2. The two field coils, L_1 and L_2, are in a fixed position with their planes at right angles and each comprises several turns of wire. A smaller exploring coil, L_3, is mounted within the field coils and may be rotated by a handle with its angular positions shown by an indicator attached to the compass card.

The action of each of the compass coils is the same as that of the single compass coil previously described. The function of the two field coils is to reproduce the energy in the loop coils, but to a less degree. It is essential that the two loops be mounted in a fixed position and at right angles. The condensers C_1, C_2 have identical capacity

values and are tuned simultaneously by a handle to the wavelength of the signal to be received. If the waves advance in the direction of loop A_1, the oscillating currents induced in this loop will be maximum, but at zero intensity in loop A_2. The current flowing in coils L_1 and L_2 produces about them magnetic fields which are proportional to the amount of energy received by the loops to which they are connected. The magnetic fields combine to produce a resultant field which is proportional in magnitude to the signal currents in the two loops. If the small exploring coil L_3 is rotated about its axis, the e.m.f. induced in this coil by the resultant field due to the flux set up by coils L_1 and L_2 will be maximum when the plane of coil L_3 lies parallel to the field coil producing the strongest magnetic field. In the case just cited, exploring coil L_3 would lie parallel to field coil L_1.

Again, if the waves advance in the general direction of loop A_2, the induction in A_2 will be maximum, and minimum or nil in A_1. Hence, the exploring coil must now lie parallel to field coil L_2 to receive maximum induction. In order to supply maximum current to the detector circuit, the exploring coil L_3 must always be at right angles to the resultant magnetic field produced around the windings of L_1 and L_2, and the corresponding position of the exploring coil for maximum induction of signal energy may be indicated by the pointer on the compass card. A minimum position may also be taken by turning L_3 until no signal is heard. By previous calibration of the compass the line of direction of the sending station may be determined.

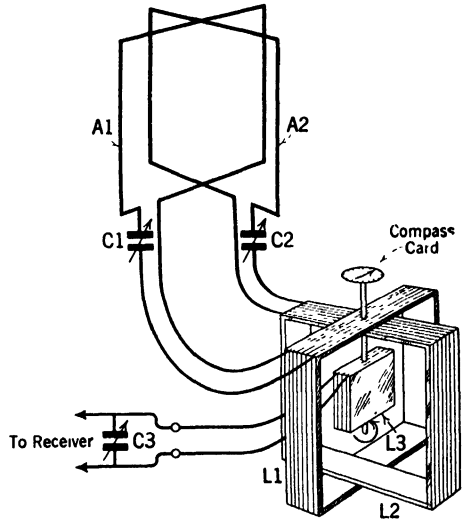

FIG. 424.—The general arrangement of the components in the Bellini-Tosi Goniometer.

The circuit is so arranged that the exploring coil is really acting as a miniature compass, depending for its operation upon the relative strength of the two magnetic fields surrounding L_1 and L_2, which in turn are dependent upon the induction of current from an advancing wave in the respective loops A_1 and A_2. The exploring coil, being inductively coupled to the field coils, is tuned by the variable condenser

C_3 to obtain resonance with the incoming signal frequency. The radio-frequency current received in L_3 produces a potential difference across tuning condenser C_3, which, when applied as an e.m.f. to the grid of an electron tube detector, will be translated into modulated direct current suitable to actuate the telephone receivers.

Let us suppose that an advancing wave is in a direction which induces current of equal intensity in both coils at the same instant, when two such fixed loops are thus employed to obtain a bearing. Then the corresponding fluxes surrounding the field coils will be at right angles and of equal strength. It will be understood that current may or may not be induced in a conductor when current flows in another circuit. This action depends upon the inductive relationship, or the coupling between the two circuits. Since the coupling between the field coils and the exploring coil is purely electromagnetic and variable, a position may be found for L_3 for which no signal current is set up.

In the goniometer described, the coil L_3 will not point in a direction toward the transmitting station, but 90 deg. away from it at minimum signal. This system depends for its accuracy upon the perfect symmetry of the loops and coils, and several readings are taken, rotating the coil L_3 180 deg. each time.

Unidirectional Characteristics—Sense Radio Direction Finder.—By means of the single coil antenna, or by means of a double coil goniometer, we are able to determine the plane parallel to which the electric waves are acting, but the exact direction of the station radiating the signal is still to be determined. In order to eliminate the 180 deg. uncertainty of the single or double coil, a system has been developed with the addition of a vertical wire antenna, which is an adaptation of other methods previously explained. The wire antenna is so disposed in space and connected through a field inductance coil coupled to the field coils of the usual loop antenna that signal waves will induce current in both circuits which may be entirely neutralized once; that is, the signal may be eliminated only *once* for one complete revolution of the loop.

The purpose of this method, then, is to obtain *one* well defined zero position to the extent that determination may be made of the exact line of direction in which a distant radio transmitter lies. In the practical manipulation of the radio compass, the following two major operations are carried out:

(1) The line of direction in which the distant station lies is first determined. This is called the bilateral bearing.

(2) On which side of the straight line the distant station is located

is next determined, thus giving a unilateral characteristic or a bearing which supplies the sense of direction.

A simple coil antenna *ABCD*, used in conjunction with the vertical wire antenna *EF*, is shown in Fig. 419. Upon referring to the diagram, it can be seen that the incoming signal wave, illustrated by the arrow and wave motion, strikes the wire *EF* first and induces an e.m.f. therein, ahead of either the vertical wire *BA*, or the wire *CD*, which is the opposite side of the loop. The induced e.m.f. in *EF* produces a current flow in L_1, when switch *S* is closed, and its magnetic field acts upon the field coil L_2, which carries the current produced by the e.m.f. in the loop. Therefore, the total current flowing through L_2 will depend upon the combined action of the coil antenna and the vertical wire antenna.

This explanation should be clear if we consider that, when the switch *S* is open and no current is induced in L_1, there can be no transfer of energy from L_1 to L_2, and the current flowing in L_2 is the result of the action of the waves upon the coil antenna alone.

On the other hand, with the switch *S* closed and the waves coming from a direction opposite to that indicated, the signal energy will strike wire *CD* in advance of *EF* and *BA*. Hence, the e.m.f. induced in *CD* will lead the e.m.f.'s induced in *EF* and *BA*, and the effective e.m.f. in the circuit will produce a current flowing through L_2, which is greater this time than when the coil antenna acted alone. In the above instance, the switch *S* must be closed, so that the magnetic field surrounding L_1 will induce an e.m.f. in L_2, and the induced e.m.f. must also be in such direction that it will assist the e.m.f. already induced in coil L_2 by the energy picked up on the loop.

The current in the vertical wire antenna coil L_1 will tend either to diminish or to build up the current flow in the loop coil L_2. A reduction or increase in signal strength will follow, depending upon the direction of the waves and the relative position of coils L_1 and L_2. Just why the signal will either increase or decrease, as explained previously, is because the induced e.m.f. in the loop will change the phase of the current flowing through L_1 relative to the current in L_2. This condition may be brought about either by a change in the direction from which the waves are coming or by reversing the loop so that the side pointing toward the incoming waves will have the induced e.m.f. lead the other induced e.m.f.'s which previously formed the reverse order before the loop was turned. This action can be demonstrated easily by the use of the *vector* diagram method. A very practical detailed explanation is given in subsequent paragraphs and is based on the relative units of signal strength in the wire antenna and loop systems while the loop is turned one revolution.

How to Obtain Exact Direction of Distant Sending Stations.—Reference is made to the diagram in Fig. 419 in giving the following operations for obtaining the exact direction of a distant sending station:

(1) When the switch S is opened, the compass loop $ABCD$ is turned to a position where the signals are easily read, and the loop system is then tuned to resonance with the desired signal wave by means of variable condenser $C2$.

(2) The switch S is now closed and the coupling between the field coil L_1 connected to the vertical antenna, and coil L_2 connected to the loop antenna is adjusted until a signal of maximum strength is heard. The arrow through L_1 indicates that the coupling is variable. This adjustment is known as the *balancer*.

(3) The next operation is the opening of switch S. Turn the loop until the signals disappear or become a minimum. The loop, when in this position, is in a plane at right angles (90 deg.) to the line of direction of the signal waves.

(4) While the switch S remains open, the loop is turned 90 deg. from the position occupied in (3) until a maximum signal is obtained. The plane of the loop is now parallel with the direction of the signal wave. The line of direction or what is known as the *bilateral bearing* is obtained from operations (3) and (4).

(5) With the loop in this position, for maximum signal energy, the switch S is now closed. The signal strength will either increase or decrease relative to that in (4), depending upon the exact direction from which the waves are advancing. If the signal strength decreases upon closing S, the waves are coming from a certain direction. On the other hand, if the signal strength increases, the waves are coming from the opposite direction. Whether the waves are coming from one direction or the other may be definitely ascertained by equipping the rotating member of the loop with two pointers diametrically opposite, marking one red and the other white; and, by previous calibration of the instrument, the signals then may be known to come from a given direction. The pointers are suspended above the compass card and the white pointer may be selected to indicate the known direction of the sending station when receiving a minimum signal. This known direction is called the " sense " of direction and the bearing obtained a *unilateral* or *unidirectional* bearing. The switch S is called the " Line-Sense " switch, because opening the switch gives the line of direction and closing the switch gives the sense of direction.

The pointer gives only the sense of direction of a radio station with reference to the bow and stern of the vessel, and not the geographical location of that station, unless the direction finder is equipped with a

live gyro-compass repeater. Without the gyro-repeater, the station whose direction is to be determined must be obtained from the sense reading of the radio compass, plotted with the ship's standard compass. Stated more clearly, the radio compass gives the angle which the advancing wave from the transmitting station makes with the center line or keel of the ship.

Detailed Explanation of Principle of Unilateral Bearing Illustrated with Cardioid or Figure-of-Eight Pattern in Diagram.—The fundamental action of a single rotatable loop has been explained fully in foregoing paragraphs with graphs to illustrate the changes in signal current intensity when the loop is turned one revolution, as shown in Fig. 422. We may now proceed to the behavior of the vertical wire antenna. Assume that a single wire *EF*, as shown in the diagram of Fig. 419,. is suspended in space in a vertical position, connected to field coil L_1 with the circuit, and completed through switch *S* to the ground. Let the direction of the incoming signal be represented by the arrow. One should not have any difficulty in understanding that if the vertical conductor *EF* were free to be rotated about its own axis irrespective of the direction in which it was turned, the electric waves would induce a signal current of uniform magnitude. Observe that the wire is not to be moved in such a way as to change its angular position with the radio waves. The vertical conductor is merely rotated, and if the motion should be very fast it could be compared, by simple illustration, to the movement of a spinning top.

A vertical wire does not exhibit directional properties, as does the loop, and for this reason the unit current strength set up by a passing wave will be equal for all positions of the wire *EF*, if it is turned one revolution (360 deg.). When these uniform values are plotted on a graph, the curve will take the form of a circle, as shown in Fig. 425, because all points on the circumference are equidistant from the center. In the same manner that an arbitrary value was assigned to denote maximum signal strength in the loop, as stated in the previous section, which was given as 15 units, it may also be assumed that the unit current strength in vertical wire *EF*, Fig. 419, is 15 units. This unit value will not change in *EF*, as in the case of the loop, either when signals change their direction, or the loop is turned, to cause a variation of the current units in the latter. Hence a single wire vertical antenna has as its characteristic a unit signal strength unchanged by reason of a change in its position; whether it is turned 360 deg. on its axis or if the direction from which the signals are advancing is changed. Since the induced current in *EF* is always of uniform value, and in this instance equal to 15 units, we may identify this current by calling it a

positive current or + 15 units for convenient comparison (to be given later) with the loop current.

Knowing that the vertical wire has non-directional characteristics and the loop has bilateral characteristics, the two properties may be combined in an intermediate circuit to obtain unilateral or unidirectional characteristics. The intermediate circuit comprises field coils L_2 and L_1 as shown in the diagram of Fig. 419. The fundamental principle of this action may be explained as follows, always keeping in mind the fact that alternating current flowing through L_1 will induce an alternating e.m.f. in L_2 when switch S is closed. The effectiveness of L_1 circuit upon L_2 circuit will be observed by the strength of the signal in the telephone receivers, because L_2 circuit, or loop circuit, is the one connected to the receiver. Although the drawing shows a simple vacuum tube detector connected to the terminals of the loop circuit, a regenerative receiver may be used.

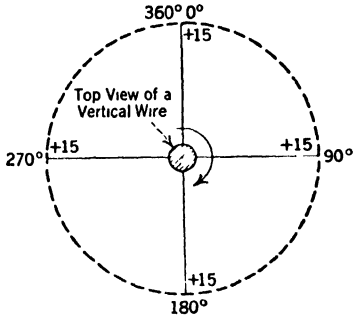

FIG. 425.—The broken line circle shows the signal current in a vertical wire antenna possessing non-directional characteristics.

If we superimpose the signal e.m.f. induced in L_2 from the alternating field set up by L_1 upon the signal e.m.f. induced in L_2 from the loop, there will be produced a resultant current in L_2 which is non-uniform in strength. A composite of the two energies, one from the loop and the other from the vertical wire, is graphically illustrated, the final signal energy appearing as a heart-shaped curve. The heart-shaped curve, called a cardioid, is shown in Fig. 426. It is seen that it is based upon the addition or increase of the total current with the loop in one position and a reduction or decrease of the total current when the loop is turned 180 deg. to the opposite position. The dotted circles 1 and 2 are reproduced from the graph in Fig. 422 which has been explained previously, and the outer dotted circle is reproduced from the graph in Fig. 425.

The circle 1 of Fig. 426 shows the alternating current units when the loop is turned the first half revolution, and these units are called *positive* units to distinguish them conveniently from the *negative* units which are so called because of the reversal in the order in which the alternations flow back and forth through the loop during the second half revolution. This reversal in the general direction in which the alternating current flows back and forth through the loop depends upon

which side of the loop is presented toward the advancing wave to be acted upon and receive the induced e.m.f. first. The induced e.m.f. in the side acted upon first leads the induced e.m.f. in the side acted upon last as previously explained.

It would be advisable to review at this point the theory of the origin of the figure-of-eight pattern or curve illustrated by the two dotted circles. This is given in the text relating to Fig. 422.

In Fig. 426 the cardioid or effective signal intensity curve is plotted by algebraically adding the *positive* current units induced in the verti-

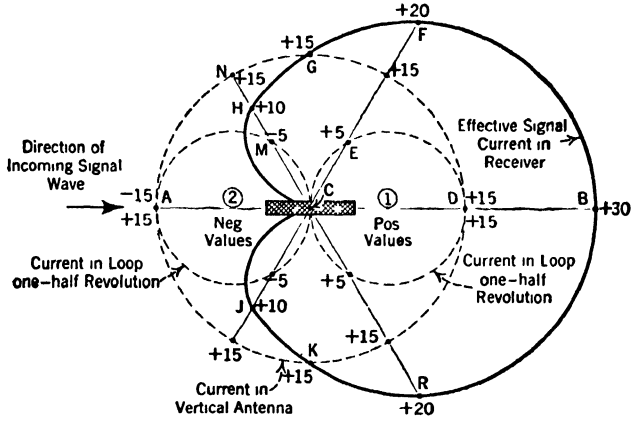

FIG. 426.—Depicting unilateral characteristics. The effective strength of the signal shown by the heart-shaped curve (cardioid) is obtained by combining the loop current and the vertical antenna current while rotating the loop.

cal wire to the *positive* and *negative* units of alternating current induced in the loop coil by a passing wave.

With the loop in the position as shown in the diagram, in a plane with the incoming signal, to receive maximum induced current of + 15 units designated by point *D*, and added to the + 15 units in the wire antenna, we obtain the first location for graphically showing the total current of + 30 units at point *B*. If the loop is now turned with its plane parallel to line *CF*, then + 5 units of signal strength will be received, shown by point *E*, and this added to the constant + 15 always coming in on the vertical wire, will equal + 20 units, giving a second location at point *F*, designating the effectiveness of the combined currents at this moment.

The loop is again turned to line up with *GK*, and in this position, it is in a plane 90 deg. to the wave travel and zero units; that is, no current is induced in the loop. The current in the circuit is now only that

which is contributed by the vertical antenna, or + 15 units. This is shown by a third location at point *G* on the outer dotted circle. Again turn the loop to line with *CN*. Observe that the last change in loop position has caused that side of the loop which was acted upon first by the incoming energy to be now acted upon last; and, as previously explained, the alternating current will flow back and forth through the loop with the alternations occurring in the reverse order or in opposite phase. The alternating current in the loop at once begins to oppose the alternating current in the vertical wire, and the opposing current or negative units will become stronger as the loop is further rotated to bring the plane of the loop again in line with the arrow indicating the direction of wave travel.

This time, with the loop in line with *CN*, − 5 units will be induced in the loop, shown by point *M*, and this algebraically added to + 15 units in the vertical wire, shown by point *N*, will give a total of 10 units designated by point *H*. A fourth location for the combining energies has thus been found. It might be explained here that + 15 units added algebraically to − 5 units will equal + 10 units. This is another way of stating that if you have a quantity of 15 of any thing and you take away 5 units, there will remain 10 units.

The loop is now turned from position in line with *CN* to position in line with *CA*, and it will be seen that the loop is once more in a plane parallel to the waves to receive the maximum signal strength of − 15 units. That side of the loop which was pointing toward *B* is now pointing toward *A*, or toward the sending station. While the strength of the alternating current in both circuits is equal, yet they are opposed in direction; that is, the two energies are 180 deg. out of phase. Consequently, the − 15 units of the loop added to the + 15 of the vertical wire will cancel; that is, no signal current will flow in the circuit, and no signal will be heard in the receiver. The − 15 units in the loop shown at point *A*, and the + 15 units in the vertical wire shown also at point *A*, when added algebraically, will equal 0, designated by point *C*. By continuing the rotation of the loop the points of location at *J*, *K*, and *R* will likewise be found.

By drawing a line through all of the points plotted, respectively *B*,*F*,*G*,*H*,*C*,*J*,*K*,*R*, the heart-shaped curve will be the result. This curve tells us that the loop coil functioning in conjunction with the vertical wire antenna has unidirectional characteristics, because we have one broad maximum shown by the curve that extends from *F* to *B* and to *R*, with the signals coming in fairly strong, even to points *G* and *K*, whereas we have a rapid reduction in signal strength indicated by the curve from *H* to *C* and *J* to *C*, with one *sharply defined* minimum

in the region at C, where the signals drop out entirely. In practical manipulation of the direction finder we may obtain either an ill-defined or a biased curve, meaning that the currents flowing in the two circuits do not always exactly neutralize to produce a critically defined minimum. The adjustment of the loop, when turning it to read a bearing, and the adjustment of the balancer, must be carried out very accurately and the reasons can now be readily understood.

The design of a system of this type must be carefully worked out, with the view that the unit current strength in each circuit will be of equal value and the effectiveness of the currents will cancel at the position for minimum signal. If the units of current in the vertical wire exceed the units of loop current, or vice versa, a sharply defined minimum reading cannot be obtained. From the foregoing paragraphs it is seen that the heart-shaped curve, or cardioid, is a graphical representation of signal strength heard in the telephone receivers, from a distant transmitter upon which bearings are being taken, when a loop and vertical wire directional characteristics are both utilized to obtain a " sense " direction reading.

A brief summary of the action at the minimum and maximum positions is here given with respect to flow of the alternating current in both field coils L_2 and L_1 as shown in the diagram of Fig. 419.

(1) With the switch S closed and the loop turned so that the wave strikes side AB in advance of side CD, the induced e.m.f. in AB will lead the induced e.m.f. in CD. Assuming that a maximum signal is now heard, let us consider the movement of only one alternation; that is, one-half cycle of the current in L_1 and in L_2. Suppose, for this alternation, that the current is flowing upward in L_2 and the magnetic field set up around L_1 by the signal current will thread through the windings of L_2 in such direction that the induced current resulting therefrom will flow through L_2 in an upward direction. Now the e.m.f. induced in side AB by the wave will cause current to flow through L_2 also in an upward direction. Therefore the resultant current in L_2 for this one alternation is the sum of e.m.f.'s set up in the L_2 circuit by this interaction between L_1 and L_2. Since the signal e.m.f.'s are aiding the received signal will be very loud. It could be said that the signal currents in the loop and in the antenna are cooperating because they are in phase with each other.

(2) With the switch S still closed, turn the loop one-half revolution so that the wave will now strike side CD in advance of AB. The induced e.m.f. in CD will now lead the induced e.m.f. in AB. Again consider the movement of current during only one alternation. We know that the induced e.m.f. on the vertical antenna EF does not

change in direction for any given alternation, as does the induced e.m.f. in the loop when the latter is turned 180 deg. Let us assume that the current for this alternation flows through L_1 in an upward direction. During this period, the current induced in L_2 by the magnetic field surrounding L_1 will flow in an upward direction in L_2, the same as in explanation (1). But the e.m.f. induced in side CD will be in such direction that current will flow through L_2 in a downward direction. It can be seen that the total signal current now flowing through L_2 is due to the difference between the two e.m.f.'s which are impressed upon coil L_2 by this action. The two e.m.f.'s now oppose each other, or it might be said that the magnetic field changing around L_1 is bucking the magnetic field around L_2 produced by the loop current. If the two fields are equal in strength and opposed in direction by 180 deg., or 180 deg. out of phase with each other, the effect will be to reduce the e.m.f. in coil L_2 to zero. Accordingly the e.m.f.'s will cancel or neutralize and no signal will be heard. This is the occurrence in the field coil system for minimum signal position of the loop.

The transition or change in phase is gradual from the time, as in position (1), where the currents in the antenna and loop circuits respectively are in phase, to where the currents are 180 deg. out of phase, in position (2), as can be observed by the progressive reduction in signal strength from maximum to minimum positions. The effective signal current, as it undergoes this wide variation, is clearly shown by the heart-shaped curve or cardioid in Fig. 426.

CHAPTER XXVI

RADIO AVIATION

Introduction.—As expected, radio has become an important factor in connection with flying and it is used to serve air navigation just as it does marine navigation. More than twenty radio beacon stations are in operation on a direct *airway* across the American continent from New York to San Francisco—the first completed unit of a nation-wide service. Additional installations are being made rapidly on other airways to safeguard travel on the principal highways of the air. It is agreed that a radio wave or beam is the only reliable means of penetrating fogs or mists to any great distance and, obviously, radio provides the only means of contact between an airplane in flight and the ground when atmospheric conditions make visibility naturally low. Hence, radio by its fundamental nature aids air navigation in the following important ways: In furnishing direct communication between airplanes in flight and the ground, and directional indications to pilots for guiding their airplanes along established airways.

To increase the reliability and safety of air travel the Airways Division of the Department of Commerce planned a system of radio beacon transmitters at important airports throughout the country. These transmitters send out a signal which produces narrow beams of radio waves, that is, electromagnetic waves. This radio energy in space is invisible to the eye, of course, but it can be easily picked up and the signal may be heard in earphones in one system, or it will provide an indication on a meter in another system, by using suitable receiving equipment on the plane. The radio beams are made to coincide with the established civil airways, which are equipped with powerful searchlights located at prominent places to mark out the various courses. Thus, aircraft is guided along routes over which most of the flying takes place. In addition to the directional radio beacon signals, service is rendered by broadcasting weather reports and other news of importance to fliers.

An air route is called an *airway* and a radio beacon station is referred to as a *radio range.*

The directive properties of a cross-loop antenna system are used to produce the radio beams in the desired directions along the estab-

lished civil airways. With the *aural* type of directive radio beacon in use, any pilot, providing he is flying along an airway and has his receiver properly tuned, can listen to either the beacon signal or the broadcast. In thick weather, or at night, the pilot may be guided almost automatically. Determination of wind-drift, compass variations and deviations and the proper time intervals for course-changing cease to be necessary.

With the aural system the pilot merely listens for radio signals. As he leaves an airport he hears the International Morse code characters "A" or "N." If the plane is off-course to one side the "A" predominates; if off-course to the other side then the letter "N" will be heard more distinctly. If the plane is exactly right on the course the two signals will merge into one long dash similar to the code character "T." Therefore, without glancing at the beacon light ahead, and even if poor visibility obscures it altogether, the pilot may follow a true course by flying his plane so that at all times the long dash predominates in his earphones. When the *visual* system is used it is only necessary for a pilot to observe the indications on a meter located on the instrument board to keep on a chosen course.

Since the majority of airplanes are used for commercial transportation they must operate on rigid schedules day-in and day-out and during all kinds of weather. As an aid in helping airmen maintain a schedule a radio wave sent out by a radio beacon station serves their needs especially at times when the powerful searchlights which beam along the airways cannot be seen on account of unfavorable weather conditions. At the present stage of development radio telephony is most practicable for one-man planes such as those that fly the mails, but in the large passenger-type planes which carry an operator, provision is made to use c.w. telegraphy where long distance must be covered. In the latter case telephony is used for stand-by or emergency.

To judge how important radio is to aviation we have only to realize that radio is the only means of making contact with airplanes in flight under adverse weather conditions and at long distances. We will now mention many important services which radio can provide for air navigation. With only a receiving set aboard the aircraft the service between ground stations and aircraft would include, (*a*) the reception of the radio range beacon signals which mark out the airways; (*b*) give weather reports and forecast and, (*c*) information such as the proximity of other airplanes and so on. With two-way communication provided by a radio transmitter and receiver on the plane, we can summarize the services as follows: (*a*) a pilot can remain in direct constant communication with his home airport; (*b*) he is able to ask for infor-

mation when shut in by fog, snow, rain, or storms and during night flying; (*c*) he can summon aid in times of distress as in the case of a forced landing and, (*d*) he can guide his airplane in flight along a definite route through the air by means of the directive signals sent out by a radio range quite as a motorist follows a routed highway.

Radio Range or Radio Beacon Station.—The interior of the Airways Radio Station of the Department of Commerce located at St. Louis, Mo., is shown in Fig. 427. Stations similar to this one are located at

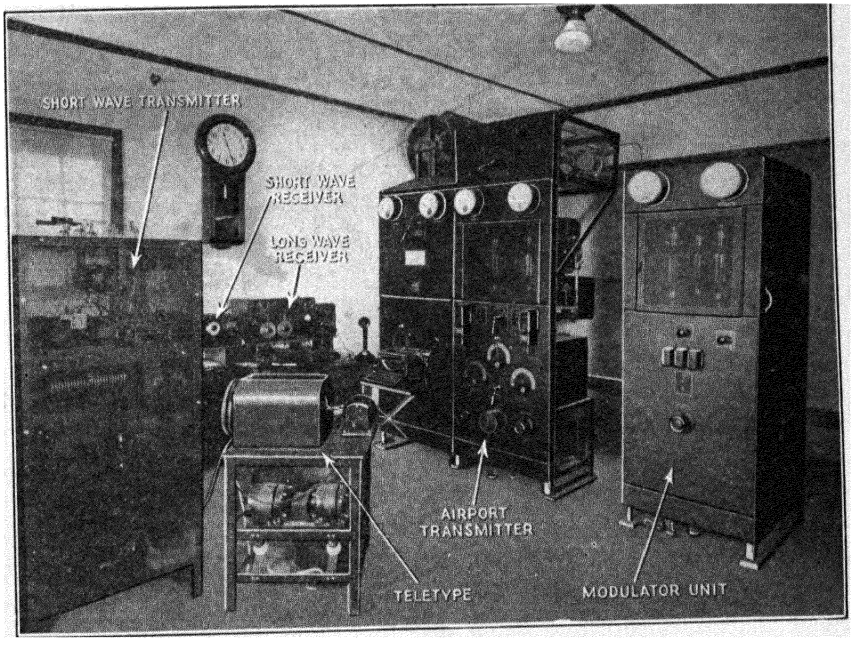

FIG. 427.—Interior of the Airways Radio Station of the U. S. Department of Commerce at St. Louis, Mo.

points approximately 200 miles apart along established airways in the United States. This photograph shows the essential equipment in such a station, which consists of a combined 2-kw. telegraph and telephone intermediate-frequency transmitter for sending out the signal for directive purposes and radio telephone for broadcasting weather service and other information to airplanes for their safety in flight. In addition, a short-wave transmitter, Department of Commerce built (shown at the extreme left in the photograph), is used for point-to-point communication. Then there is the receiving equipment necessary to carry on this service which consists of a short-wave and long-wave

receiver, the long-wave receiver on the operator's table being a model IP-501. Teletype machines are also provided which print on a paper tape all information important to fliers, and this appears at each station in the circuit. Land line telephone and telegraph are also employed in collecting and distributing this information between stations.

The procedure now in use is to transmit the radio beacon signals in conjunction with the radio broadcasts on the same frequency. The signals are sent out continuously except during four three-minute periods at the quarter hours at which time the radio telephone broadcasts are made. The beacon is cut off every fifteen minutes and identified by station announcement, which is followed by correct time and weather reports and other announcements, and then, on completion of the broadcast, the beacon is again placed in operation. Frequency channels have been set up for this service by the Federal Radio Commission, a particular channel being used along a given air route regardless of the number of transport companies flying that route. This system may be interrupted at any time to send emergency messages to pilots in flight.

It is to be understood that all airport stations owned by the commercial airport companies operate on a calling and working frequency which is designated by the Federal Radio Commission. Since airport transmitters are used to give orders to pilots by radio telephone as to landing procedure when weather conditions make it necessary, their range must not exceed five miles so as to prevent interference between neighboring airports.

Radio Range Beacon System for Airways.—The map in Fig. 428, issued by the Airways Division of the Department of Commerce, shows the general plan of the civil airways system and locations of the radio range beacon transmitters which are either in operation or are proposed. The paths of the four routes pointed out by the signals of each transmitter are indicated; these indicated paths are actually radio waves in space and, although they cannot be seen, nevertheless they are referred to as *beams*. Each beam shoots out for a distance of about two hundred miles in a certain direction but covers only a small area in width. When these radio waves or signal beams are picked up by the antenna of an airplane flying a given course and are reproduced by the radio receiver they indicate to the pilot his exact location, that is, whether or not the plane is on the airway marked out by the beacon.

From the map we can see that the important routes or airways across the country and along the coasts do not always lie in a straight line. Since four beams are radiated from the antenna of a radio range, as in Fig. 428, and they are normally equally spaced and, therefore,

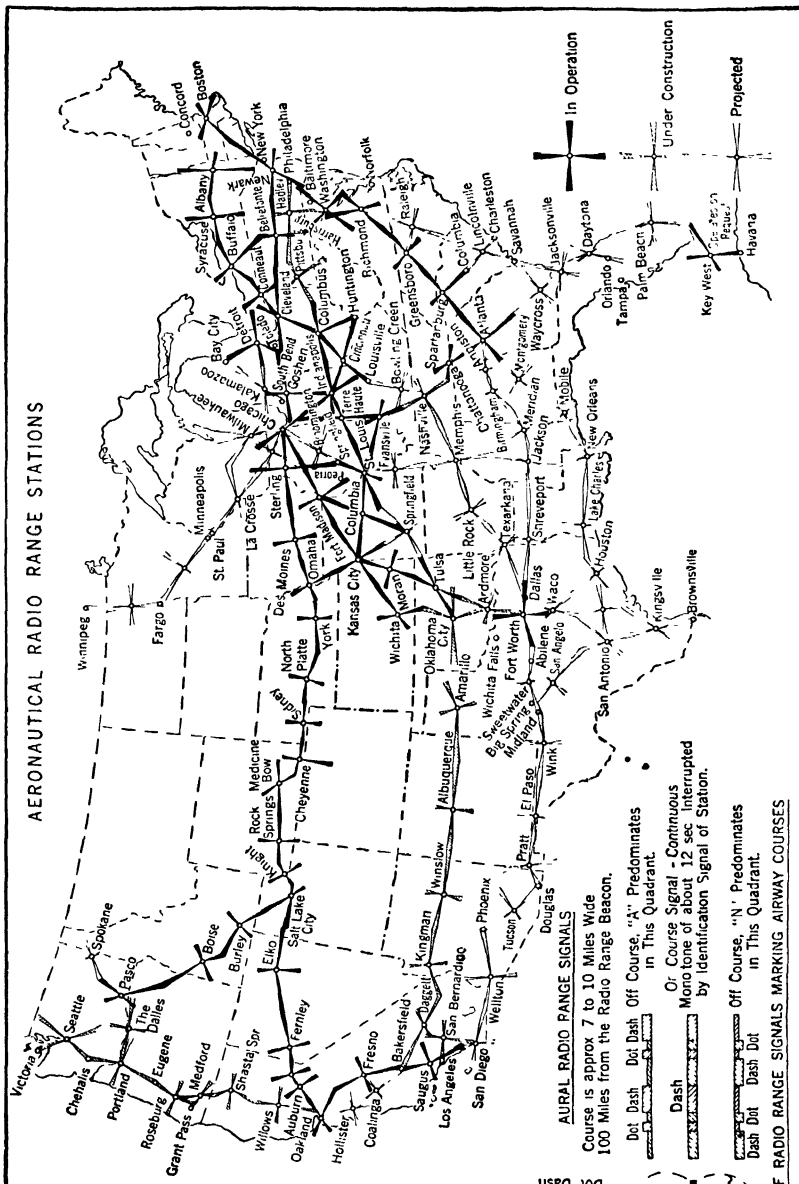

FIG. 428.—Map showing radio range beacon stations in operation, under construction or projected. *Courtesy U. S. Dept. of Commerce.*

90 deg. apart, it is necessary in many cases, as the map indicates, to shift the angle between beams in order that they will project out in the proper direction to coincide with the airways. It is of interest to know that in the case of the New York-Cleveland Airway served by the radio beacon at Bellefonte, the angle between the beams had to be shifted from 180 deg. to 166 deg. because Hadley Field, New Brunswick, N. J., is a few miles north of a location which would make this airway lie in a straight line.

Smaller radio beacons, called *marker beacons*, with a transmitting range of about five miles, are located at the intersection of adjacent courses and are arranged to send out a special characteristic signal modulated at about 1000 cycles alternately on the different frequencies used by the intersecting courses. The marker beacon signal informs the pilot that he is leaving one course and entering the next and, therefore, should retune his receiver to the frequency on which the adjacent radio range is operating. We suggest that the reader carefully examine the sketch in the lower left of the map because it explains in a simple way the principle upon which the aural type of directive beacon operates.

Explanation of a Radio Beacon Station.—A radio beacon station is usually located as near as practicable to a landing field. The essential circuits for supplying the required signals and the antenna system which produces the beams because of its directional properties are shown in Fig. 429. The antenna system consists of two loops placed at right angles to each other and supported on poles as illustrated in Fig. 430. In the small building at the foot of the center pole are the radio transmitter, automatic signaling device, link circuit relay, goniometer, and the two loop antenna units each of which is supplied with an antenna ammeter, and other apparatus required in the operation of the radio range. There are four lead-in conductors which pass through glass insulators in the side of the building and connect the antenna loops to the goniometer and antenna units just mentioned.

The link circuit relay and automatic signaling device are mounted in a single unit between the transmitter and the goniometer. This unit contains the rheostat for controlling the speed of operation of the signaling device. The goniometer serves to couple the output of the transmitter, or characteristic signal formed by the dots and dashes, to the loop antenna system, but its main function is to direct the four radio beams in certain directions from the antenna and permit the desired degree of sharpness of the beams to be obtained.

Fig. 430 suggests the size of the two antenna loops which are crossed at an angle of 90 deg. to each other. The approximate physical dimensions of each loop would be represented by a triangle having an altitude

of 70 ft. with a bottom line or base 300 ft. in length, the base being elevated about 10 ft. above the ground.

First consider the signaling device. It consists of a motor which drives a set of especially shaped discs or cams which "make" and "break" the circuit as they rotate and, hence, the device transmits

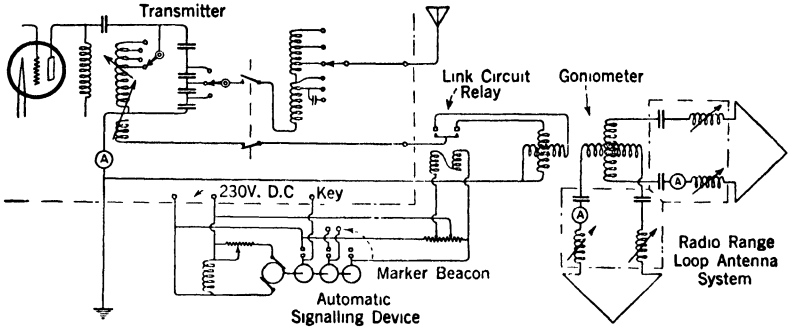

FIG. 429. Schematic diagram of a radio beacon transmitter.

the Morse code characters "A" and "N" as you would do if you were sending these letters alternately on two Morse telegraph hand keys. (Letter *A* is ·— and *N* is —·). To be more exact the cams are so timed to send the "A" and "N" in such a way that no portions of the two characters are transmitted simultaneously, and also the two

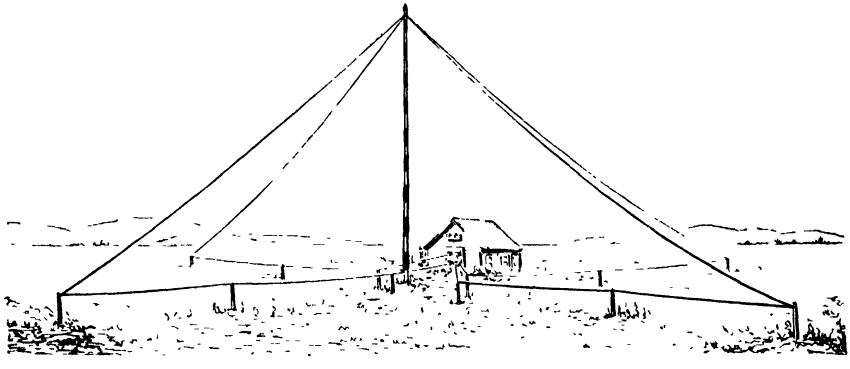

FIG. 430.—One type of antenna system used in conjunction with a radio beacon transmitter.

letters are supplied alternately to the two loops by the relay. Thus, the system works as follows: If the dash in "N" is sent first on one loop, the dot in "A" is sent next on the other loop, the dot in "N" is then sent on the first loop, and lastly the dash in "A" is sent on the second loop. So, if the pilot heard these signals in his earphones

and all the dots and dashes followed one another in succession and without intervals and all were of equal strength, then the effect would be of hearing one long dash of constant signal strength. When the characters combine into a long dash it is referred to as *blending* or *interlocking* of the "A" and "N" signals. Hence, the reception of a series of dashes, which would sound like dah-dah-dah and so on, would tell a flier he is traveling in a direct line with the beam and is therefore on the course. Now, if an airplane were flying in any area between the lines of the beams one of the individual letters would be heard strongest, depending upon which side the airplane was off the course. Also, any waviness of the signal or key clicks heard indicates that the airplane is off the center line. The individual letters "A" and "N" which comprise the signal are sent at a rate which would correspond to about 22 words per minute, counting 5 letters to a word, and in groups of from 1 to 12 signals in the manner that a clock tolls time, so that a beacon station can be identified by the number of signals per group.



FIG. 431.—Showing a visual type radio beacon indicator mounted on the instrument board of an airplane, where it may be readily observed by the pilot.

Visual Beacon Indicator.—Particulars concerning the visual beacon indicator are given through the courtesy of the Aeronautics Branch of the Department of Commerce. As shown in Fig. 431 it is a simple rugged box mounted on the instrument board and electrically connected to the receiving set output in place of telephone receivers. In this box there are two strips of metal, called "reeds" (refer to Fig. 432) which are mounted side by side, the tips of which are white and are visible through the face of the instrument (refer to Fig. 433).

When the beacon signals are received, the two reeds vibrate vertically; and since they are tuned to the two modulation frequencies used at the beacon sending station, they serve as a device for indicating

equality of received signals. When they are vibrating with equal intensity, the picture conveyed to the eye consists of two broad white vertical ribbons, varying, of course, according to the adjustment of the receiving set, from an eighth of an inch to a quarter of an inch or more in depth. The vibrating is hardly noticeable, the effect being that the lines suddenly are lengthened or shortened.

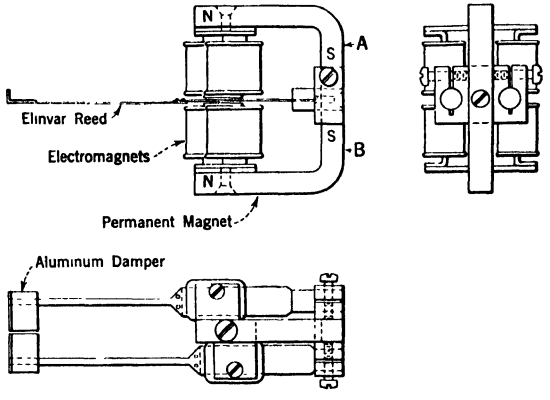

FIG. 432.—Sketches of reed indicator construction.

Reed Vibrations.—When the two white lines are equal in length the airplane is on its course. (Refer to Fig. 434.) A deviation from this course to the left increases the vibration of the left reed or white line

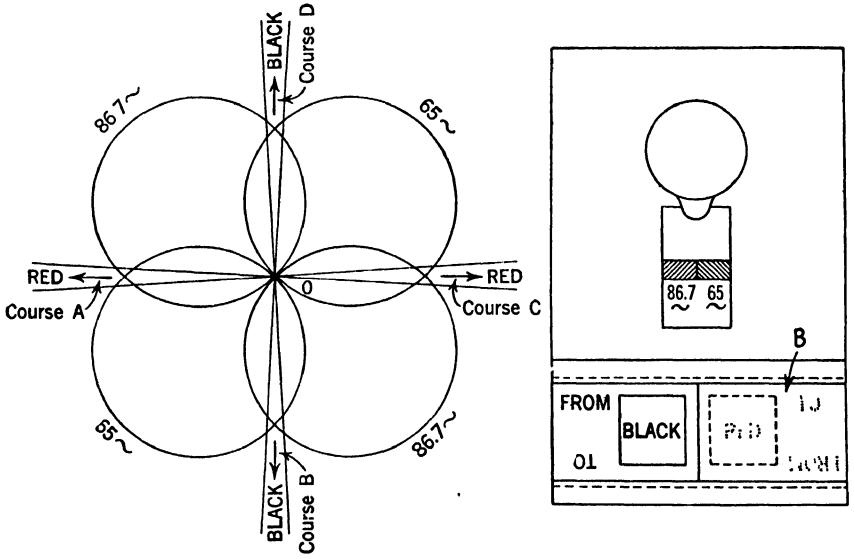

FIG. 433.—Diagram showing how the four beacon courses are produced in the directions where the radio intensities from the two antennas are equal; also reed indicator with shutter system to fit indication to red or black courses.

and reduces the other, and likewise vice versa. The longest reed, or the deepest white line, shows the side the plane is off the course. In

general, that is all there is to it, and so long as the pilot keeps the two white lines of equal size, depth, or length—whichever he chooses to call it—the plane may safely be regarded as being on the course which the radio beams are blazing through the air for any radio-equipped plane to interpret their meaning.

The transmitting set is of the double-beam directive type. (This is a general description of the four-course beacon, or a beacon that may serve four courses at the same time.) The transmitting station is usually located at an airport just off the landing field, and operates on a frequency in the 250–350 kilocycle band. The transmitter has two directive antennas crossed at an angle of 90 deg. with each other. These are simple loop antennas, each emitting waves of maximum intensity in its plane and minimum at right angles thereto. Along the line forming the bisector of the maximum radiations from the two antennas the intensities of the radio waves from the two are equal. Off this line, on

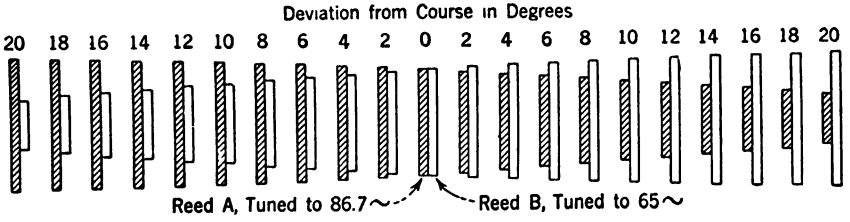

FIG. 434.—Relative change in amplitude of vibrating reeds for various deviations from the true course. When pilot is on the course, reeds *A* and *B* vibrate with equal intensity.

either side, one of the two waves is stronger than the other. An airplane may, therefore, follow a course along the bisector referred to, provided the two sets of waves can be distinguished from each other. The beacon modulation frequencies are 65 and 86.7 cycles per second, and each reed in the receiver is tuned to each of these two numbers.

The visual beacon can be employed with any receiving set which operates at the frequencies used, by merely connecting the reed indicator in the receiver output. The only special requirement is that the audio-frequency amplifier be designed to operate efficiently at the low-modulation frequencies used in the beacon, which is common practice in receiver design. Aircraft receiving sets are now commercially available which fulfill this requirement.

It is desirable that a receiving set used for the reception of the visual beacon signals have as high an undistorted power output as possible. Since the reeds are practically immune to interference, atmospheric and other disturbances will not affect their operation unless of

sufficient strength to overload the receiving set. The greater the overload point of the receiving set, the greater will be the range of the beacon during severe interference.

The incorporation of an automatic volume control is highly desirable, since such a device would still further reduce the effort on the part of a pilot using the beacon signals. Automatic volume control is possible with the visual beacon system, since the two distinguishing modulation frequencies operate continuously. Without the automatic volume control, the operator of the set on flying toward the transmitter must reduce the volume which increases constantly as the plane approaches the terminal, or in flying away from the station the volume must be increased as the plane goes farther and farther away in order to keep the signals of value at all times.

Flying a Course.—To make the use of the receiver as simple as possible, a plug-in arrangement is provided so that the relative position of the two tuned reeds of the indicator may be reversed by turning the indicator upside down. Reference to Fig. 433 will indicate the purpose of this reversal. Suppose that a pilot is flying away from the beacon on either course *A* or *C*. If he deviates to the left of his course, the amplitude of the 65-cycle reed will increase and that of the 86.7-cycle reed will decrease. A deviation to the right of the course results in an opposite effect. It is desirable, therefore, to place the 65-cycle reed on the left of the 86.7-cycle reed in order that the pilot may observe the simple and instinctive rule—longest reed shows side off course—turn to the shorter reed. When flying to the beacon, however, this rule holds true only if the relative position of the reeds is reversed, the 65-cycle reed being now on the right of the 86.7-cycle reed. Consider, now, the two 90-deg. courses, *B* and *D*. On these courses the relative position of the two reeds, in order to make the rule just stated apply, is exactly the reverse of that for courses *A* and *C*, whether flying from or to the beacon. To distinguish between the two sets of courses (*A*, *C* and *B*, *D*) a color system may be adopted on the airway maps, *A*, *C* being in one color, and *B*, *D* in another. A shutter is mounted on the front of the reed box which exposes either one color or the other. When set to

TO

the first color the words FROM are exposed, whereas when the shutter

FROM

is set to expose the second color, the words TO are exposed. The pilot then sets the shutter to the color of the course to be flown and plugs in the course indicator in order that the direction (with respect to the beacon) which he is to fly is right side up. The simple rule already stated then obtains.

Pointer-Type Course Indicator for Use with Visual-Type Radio Range Beacon.—The following data on the pointer-type course indicator are presented through the courtesy of the Aeronautics Branch of the Department of Commerce. Pilots may find this indicator more convenient than the regular reed indicator with its two white lines, described in foregoing paragraphs. The pointer-type indicator has the same freedom from radio interference and static as the regular reed indicator.

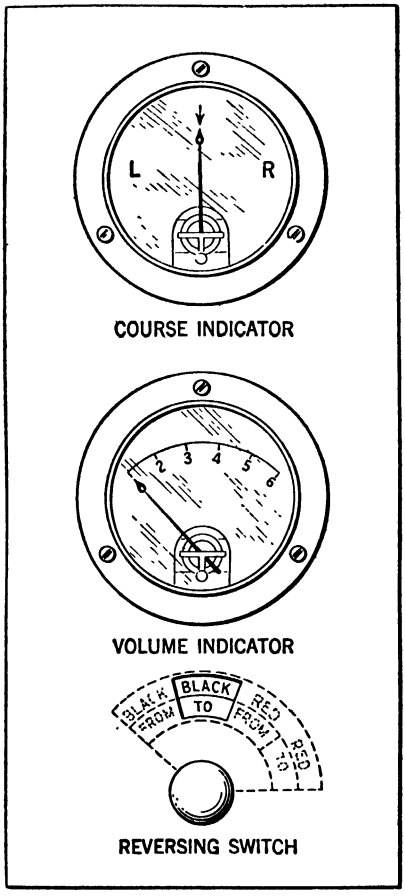

FIG. 435.—Diagrams of dials and switch used in connection with the pointer-type course indicator for the visual type radio range beacon.

The complete device consists of a reed converter, a rectifying unit, the indicating instruments, and a switch. The portion of the device which the pilot sees is shown in Fig. 435, the reed converter and rectifier units being placed in any convenient location on the airplane. The top instrument of Fig. 435 is the course indicator. The pointer of this instrument remains at center when the airplane is on the course, and swings to the right or left as the airplane deviates from the course. It does this by means of the difference in intensity of the two modulation signals received from the beacon. Since the two modulation signals are equal when the airplane is on the course, the course indicator then reads zero.

The course-indicating instrument alone would not show any effect if the beacon signals should stop or the receiving set fail, and as the instrument continued to read zero the pilot might be deceived into thinking his course was still being indicated. The second instrument, shown in Fig. 435, indicates the volume of the received signal and eliminates the possibility just mentioned. The volume indicator has essentially the same function as the loudness of received signal in reception of the aural beacon or the reed vibration amplitudes in the reception of

the visual beacon by means of the regular reed indicator. As a result, in addition to its function as already outlined, it also facilitates tuning of the receiving set and controlling the intensity or volume of the received signal when automatic volume control is not used.

The purpose of the switch shown in Fig. 435 is to assure that the deflection of the pointer of the course-indicating instrument is in the same direction as the deviation of the airplane from the course. The pilot sets the switch dial to point to the color of the course to be followed and the proper direction of flight relative to the beacon (TO or FROM).

Function of Reed Converter.—In the reed converter, which is the heart of this indicator, the motion of the two vibrating reeds is utilized to induce voltages in two pick-up or generating coils. These voltages are then rectified by means of copper-oxide rectifiers and the rectified voltages applied in opposition across the terminals of the pointer-type course-indicating instrument. The construction of the reed converter is indicated in Fig. 436. One element of the complete reed converter is shown, two of these elements being required for the four-course indicator and three for the twelve-course indicator. The reed, *S*, which is tuned to one of the modulation frequencies of the radio range beacon, is driven by means of the two driving coils *O* and *P*, through which the beacon signals in the receiving set output are made to pass. The motion of the reed generates a voltage in the pick-up coils *Q* and *R*, the frequency of this voltage being the same as the frequency to which the reed is tuned. The magnitude of the induced voltage is proportional to the amplitude of vibration of the reed and, consequently, to the intensity of received signal of that frequency present in the receiving set output.

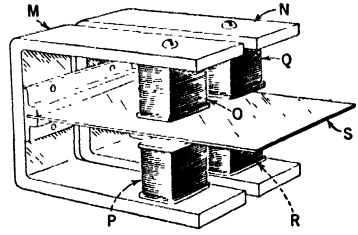

FIG. 436.—Construction of a reed converter.

The reed is wider than in the conventional reed indicator so that it may project under the driving and pick-up coils at the same time. Two permanent magnets are employed to prevent setting up a common magnetic path whereby the pick-up coils would have direct induction from the driving coils even if the reed were at rest. This would result in broadening of the beacon course and also in operation of the course indicator by atmospherics and other interfering signals. Although the reed serves as the common return path for the two magnetic systems, its width is such as to prevent reaction between them.

Circuit Arrangement.—The electrical circuit arrangement for the complete device when employed in reception on a four-course beacon, using 65- and 86.7-cycle modulation, is shown in Fig. 437. The voltages

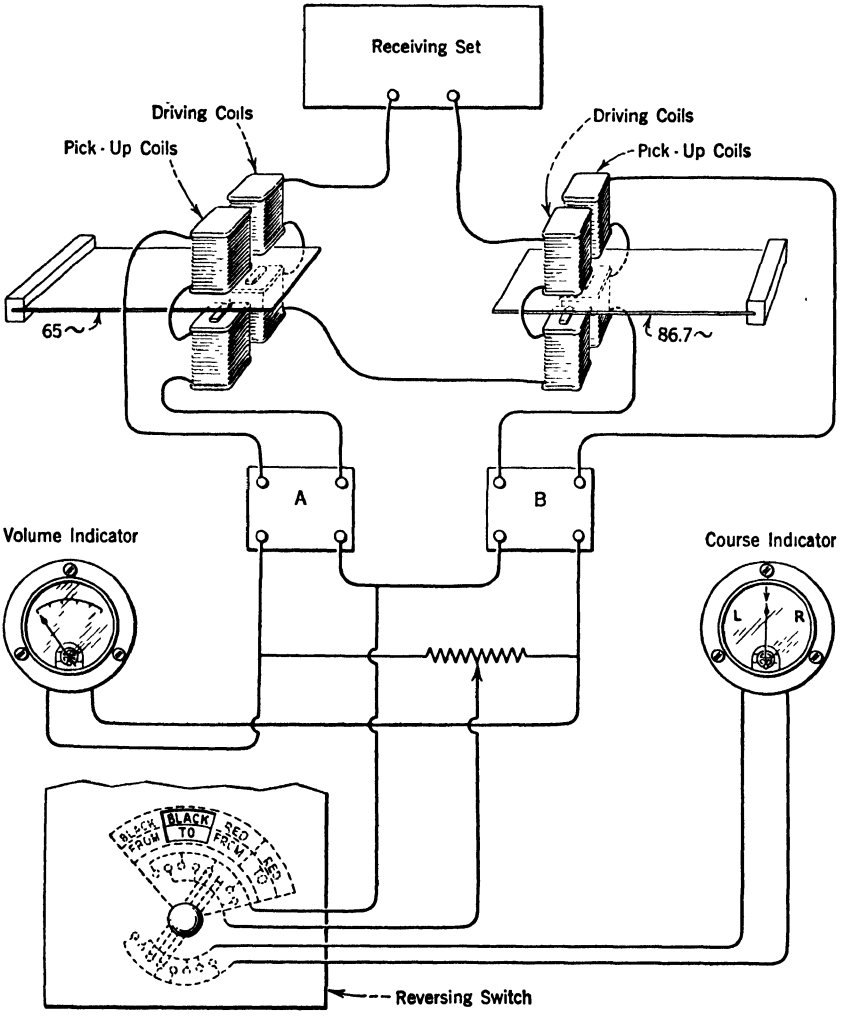

FIG. 437.—Electrical circuit arrangement for a complete visual type radio range beacon device.

generated in the converter pick-up coils are rectified by means of copper-oxide rectifiers *A* and *B*. The rectified output voltages are applied, in opposition, across the terminals of the course-indicating instrument through the reversing switch. The purpose of the re-

versing switch was explained in the foregoing text. The volume-indicating instrument is connected to read the sum of the output currents from the two rectifier units. The best combination of instruments found in the laboratory and flight tests carried on by the Department of Commerce is a 250–0–250 microammeter for the course indicator and a 0–500 microammeter for the volume indicator.

The reed converter device has very nearly the same sensitivity as the regular reed indicator when adjusted to give equivalent course sharpness. The stronger the signal delivered to the reed converter from the receiving set output, the sharper the course indications become. This feature has an important bearing upon the use of the reed converter, since, if the signal intensity is maintained at too high a level, the pointer of the course-indicating instrument may deflect off scale for too small a deviation from the course. Sense of deviation from the course beyond this value is then lost. With the 250–0–250 microammeter used as the course indicator and the input signal to the converter maintained at 4 milliwatts, the full width of the beacon space pattern may be utilized. At this signal level the sharpness of the course indications is equivalent to that obtained with the regular reed indicator.

Principle of "Bending" or "Shifting" Radio Beacon Beams.—It is well known that a simple loop has directive properties and, therefore, the signals it sends out will be strong from one side and weak from another. This unequal distribution of radio energy in the field set up around an active loop antenna system would be detected by making tests with a portable receiving set. To illustrate this difference in signal intensity we use circles such as those shown in the drawings of Figs. 438, 439 and 440. A simple loop emits a wave of maximum intensity in a direction in line with its own plane and minimum at right angles thereto. Fig. 438 explains this as follows: Circles *C*1 and *C*2 show that the energy radiated by the "A" loop is maximum in an up-and-down direction looking at the page and minimum in a direction across the page. This same relationship exists for the "N" loop, its directive properties being shown by circles *C*3 and *C*4. These circles and heart-shaped curves illustrating relative intensity of radio waves in space are known as "field patterns."

The effect of normal radiation of the crossed loops of a radio range is pictured in Fig. 438; here we see four courses provided at 90 deg. apart since the r.f. current in each loop is the same and, hence, the radiation is the same. Remember that in the aural system a course or radio beam occurs in a line along which energy in the "A" signal and "N" signal are equal, these locations being marked by heavy dots on

the circles. Engineers of the Airways Division have worked out two methods for bending the beams the desired amount to line them up with established airways. One method for obtaining the desired effect is to insert a suitable resistance in either loop to increase or decrease the r.f. current in the loop; this produces courses as shown in Fig. 439. Another method consists of supplying the circular radiation of a vertical wire antenna in addition to the radiation of the loops. A vertical antenna has no directional properties; it radiates equally well in all directions and, hence, its energy acts on the loop energies to produce an effect as shown in Fig. 440. Comparing the three drawings which are largely self-explanatory, note how the field patterns differ in every case, and that wherever the "A" and "N" signals are equal a course is produced. Since the beams are only a few degrees wide and travel in

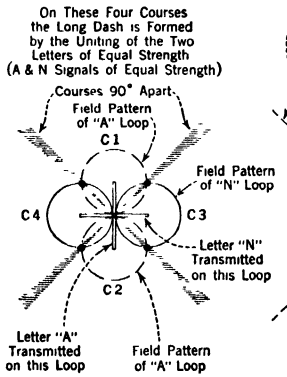

FIG. 438

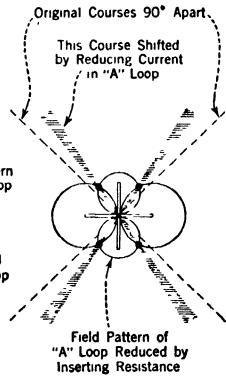

FIG. 439

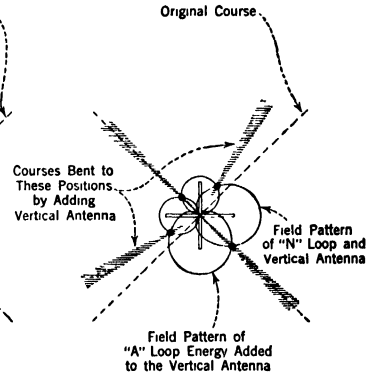

FIG. 440

FIGS. 438, 439, 440.—Illustrating the principle of *bending* or *shifting* radio beacon beams as a means of guiding aircraft along a charted course.

a line outward from the beacon for a couple of hundred miles, then the closer an airplane is to the beacon the narrower and sharper the beam becomes. The beams are about 7 to 10 miles wide at a distance of 100 miles from the radio range beacon.

Radio Range Transmitter.—The transmitter illustrated in Fig. 441 is used for radio range service at the Airways Radio Station at Hadley Field, just outside of New Brunswick, N. J. A transmitter of this kind may also be used at airports for point-to-point communication or for communication from airports to aircraft. Of special interest are the goniometer and the two loop tuning units shown mounted on the wall which are built into metal frames and completely shielded. An antenna ammeter is provided in each tuning unit for use in tuning the antenna loop with which it is used. Observe how the four lead-in con-

ductors which connect to the crossed-loop antenna system pass out-of-doors through glass insulators installed in the two panels on the wall. For radio beacon work this range equipment will ordinarily use only tone modulated telegraphy, this being accomplished by modulating the transmitter through the regular audio system included in the modulator unit, using an audio-frequency oscillator for obtaining the desired frequency. When radio telephone transmission is used for broadcasting weather service the high frequency generated by the transmitter is modulated by the voice frequencies passing to it from the microphone and the modulator circuits.

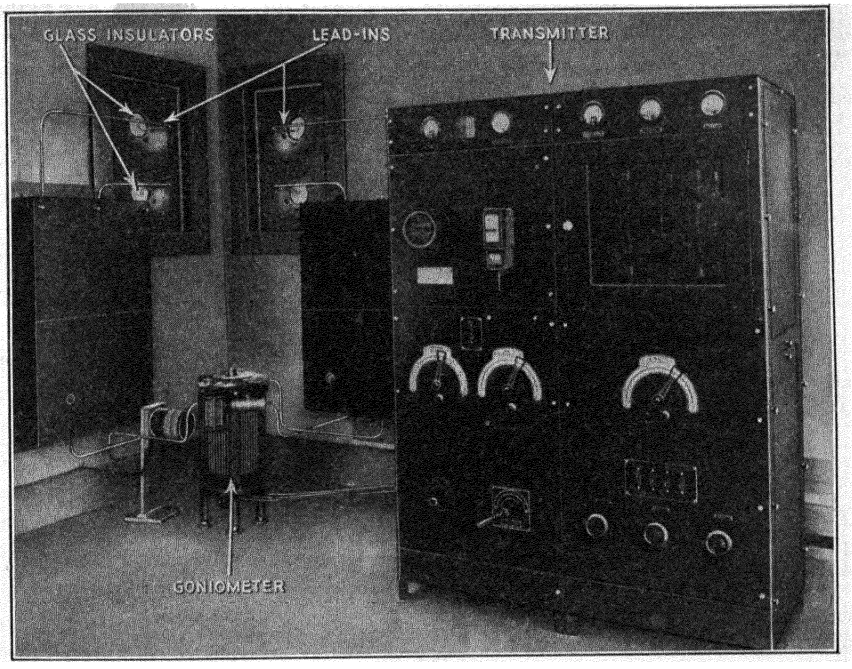

FIG. 441.—This transmitter, installed at the Airways Radio Station at Hadley Field, N. J., is used exclusively for radio range service.

Airport Radio Telephone and Telegraph Transmitter.—Inasmuch as the various air transport companies, or airway systems as they are sometimes called, are engaged in flying the mails and carrying passengers and cargo they necessarily have certain obligations to meet in safeguarding the lives and property of those who use this modern method of transportation. Also, the service rendered must be reliable to retain the support of the flying public and this requires that established schedules be maintained day-in and day-out and often under the most unfavorable weather conditions. It is easy to appreciate, therefore, that an airways

system can facilitate the handling of traffic which includes, among other things, the arrival and departure of its planes, by employing radio for communication purposes at airports or terminals under its control. A typical radio transmitter for use at airports is described in the following paragraphs. The transmitter, which is the RCA model ET-3666 and pictured in Fig. 442, consists of two main units, the unit at the left being the radio-frequency portion of the set, and the one at the right the modulator.

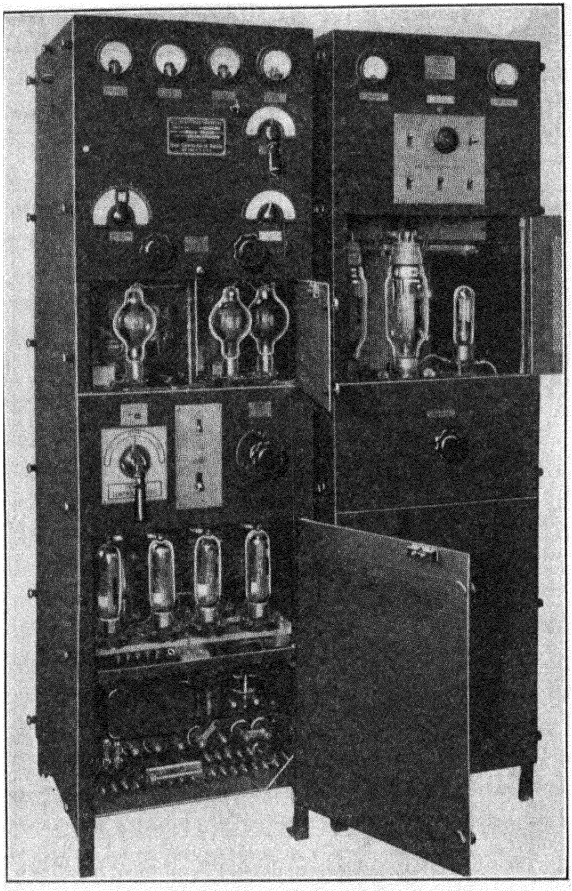

FIG. 442.—The RCA type ET-3666 telegraph and telephone transmitter for use at airports. The radio-frequency unit is the left-hand section of the transmitter; the modulator is on the right.

The equipment for a transmitter of this type includes other apparatus not shown in the photograph such as a telegraph key, start-stop switch, send-receive switch, microphone, storage battery, and so on. When connected to a suitable antenna system the output of the power amplifier will deliver 200 to 350 watts of continuous wave (c.w.) radio-frequency energy. It is to be noted that such a transmitter provides continuous wave telegraphic transmission only, and it is by the addition of the modulator unit that telephone transmission is also made available. This airport transmitter operates in the low wavelength or high-frequency band. Its radio-frequency circuits cover a continuous frequency range of from 2000 to 6000 kilocycles which, in terms of wavelength,

represents a band from 150 to 50 meters. When special coils are used in the transmitter, the r.f. circuits will cover a still lower waveband, or one extending from 5900 to 17,200 kilocycles, which is 54 to 17.5 meters.

By employing the *master oscillator-power amplifier* type of radio-frequency circuit the signals radiated by the antenna are kept at practically a constant frequency, that is to say, the signals will not waver appreciably above or below the assigned frequency. This condition is to be desired in any transmitter because the operator at the receiving station can copy a code message or listen to a spoken communication, depending upon which method of transmission is used at the time, without the annoyance of occasionally readjusting his tuning dials. Furthermore, frequency stability in a transmitter tends to lessen or prevent interference between stations in congested wavebands, and especially those which are assigned to aviation. The allowable difference between the frequency assigned and that actually transmitted is governed by the waveband and the class of radio service—broadcast, marine, aviation and so on.

The special features of the control circuits of this airport set are given in the following paragraphs. The transmitter is provided with a local " start-stop " switch which is mounted on the front of the transmitter panel and, in addition, an external " stop-start " switch from a remote point can be connected in parallel with the switch on the panel to enable the operator to control the set from one or the other of these two switches. When the " start-stop " switch is placed in the " start " position, voltage is applied to the filaments of the radio-frequency and rectifier tubes and also to the delay action relay. The relay contacts control the d-c. supplied to the plates of the tubes. It is necessary to have a delayed action relay to prevent the load of the plate circuits from being thrown on the rectifier tubes until a certain time has elapsed after applying filament voltage to the tubes. A time interval of about thirty seconds in the operation of the relay between the closing of the filament circuits and the plate circuits is sufficient to provide proper protection for the rectifiers.

The transmitter includes a " send-receive " relay controlled by a " send-receive " switch for transferring the antenna and ground connections from the transmitter circuit to a receiver, when a receiver is located close to the transmitter. This " send-receive " switch interlocks the coil of the main plate contactor in such a way that plate voltage is not supplied to the rectifier tubes excepting when the " send-receive " relay is in the " send " position. The control circuits also include a main power switch which serves to remove all power from the various transmitter circuits with the exception of the 6-volt storage battery

circuit. The transmitter is keyed for telegraphic operation in the usual way by means of a telegraph key generally placed on the operator's table. A test key located above the power control switch on the transmitter panel has its contacts in parallel with the contacts of the telegraph key. The test key is used for convenient operation while the transmitter is being adjusted to any desired frequency within its band.

The power supply from an electrical transmission line required for operating this equipment is 220 volts a-c., 3 phase, 60 cycles. This includes all power for operating the transmitter and rectifier circuits, with the exception of a small amount of energy supplied by a 6-volt storage battery for the keying relay and microphone.

In the photograph in Fig. 442, the screen doors of both the transmitter and modulator units are open, which permits a clear view to be had of the vacuum tubes used in this set. Note that the r.f. circuits of the transmitter unit utilize four-element UX-860 screen-grid tubes; there is one UX-860 tube used as a master oscillator and two UX-860's as power amplifiers. In the power circuits six UV-872 tubes are used as rectifiers. A plate transformer which connects to the 220-volt a-c. line supplies power to the rectifiers. The tubes required to accomplish telephone operation are in the modulator unit at the right and they consist of one UX-860 used for a speech amplifier and two UX-849's for modulators.

Note that the indicating instruments located at the top of the transmitter panel consist of a plate ammeter, antenna ammeter, plate voltmeter, and filament voltmeter. Directly below this set of instruments, and to the right of the panel, is located the control for the antenna tuning capacitor; below this is the control for the power amplifier tuning capacitor, and directly to the left of the latter is the control for the master oscillator tuning capacitor. Observe that below the tuning controls just mentioned are the master oscillator and power amplifier tubes. On the control panel located below these tubes are the power switch, the filament rheostat control, the test key, the internal stop-start switch, and the main line switch. In the bottom compartments below the control panel are seen the rectifier tubes and the terminal board, the various relays and contactors.

At the top of the modulator panel are the plate ammeter and filament voltmeter, and below these are three tumbler switches which make it possible to read the individual or collective plate currents of the audio tubes. It should be mentioned that whenever a remote station is operated in conjunction with a main airport station and they are at a considerable distance from each other, a line amplifier will be required to boost up the strength of the audio currents in the microphone circuit

to a suitable value for operating the audio amplifiers in the modulator unit.

100-Watt Aircraft Radio Transmitter.—The principal units of a typical aircraft transmitter installation consist essentially of a transmitter, a receiver, a filter unit, a control box, an antenna ammeter, an antenna reel with 300 ft. of wire, headphones and microphones. Also, an air propeller and double-current generator called a wind-driven generator, or a dynamotor and storage battery are required to supply the necessary operating voltages to the set. A receiver would get its power supply from the same source as the transmitter. In Fig. 443

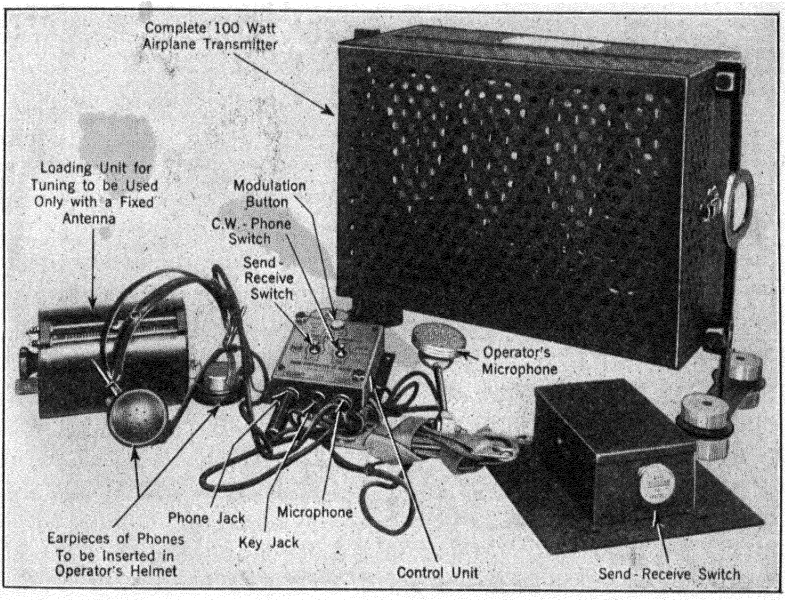

FIG. 443.—Showing the separate units of an airplane transmitter, RCA model ET-3653-A.

we see the separate units of an airplane transmitter, the different components being clearly marked for identification. These units are distributed about the fuselage of the plane in any convenient location and only the control unit and jack box and antenna ammeter need be within reach of the pilot or operator. The control unit in the photograph is for the RCA model ET-3653A radio aircraft transmitter to provide two-way communication with stations on the ground.

The explanations following will give a good idea of the special features concerning a typical light-weight and compact aircraft transmitter. By careful design, a complete unit for combined telephone

and telegraph transmission has been produced which weighs only about 28 lb. Figs. 444 and 445 show the transmitter unit with covers removed. These interior views show the special form of one type of compact aircraft transmitter. Note in Fig. 444 how all of the four tubes are mounted on one side of a vertical partition or panel which runs lengthwise of the set. In Fig. 445 showing the rear view, note how the different parts which are required in the generation of high-frequency current are supported. The parts include the antenna coupling transformer, neutralizing condenser, several fixed condensers, the master oscillator

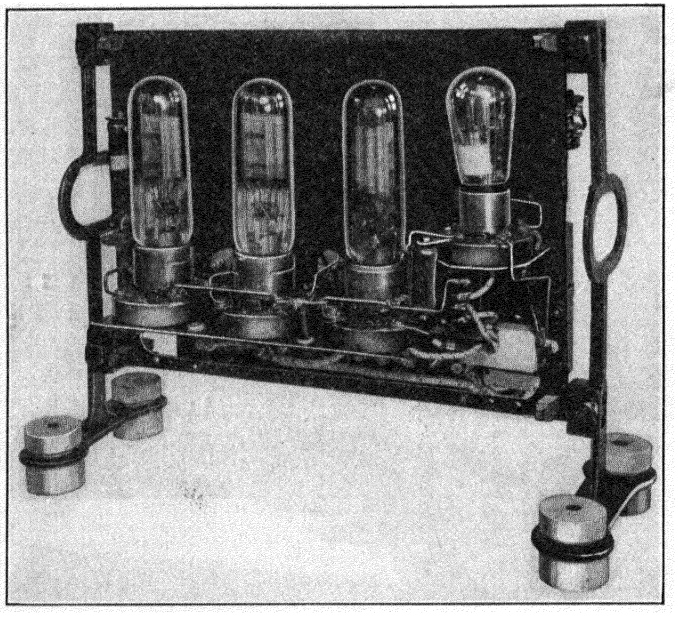

FIG. 444.—A view of one side of the RCA type ET-3653-A airplane transmitter, with protective frame removed.

tuning inductance, resistors, and so on. This form of construction makes the parts easily accessible for inspection, testing and servicing, which is important in aircraft radio maintenance. A special cable form with disconnector blocks permits the transmitter to be quickly disconnected from the power source.

The circuits of the transmitter function in a manner similar to other transmitters in that they convert the electric power output from a generator into a form which, when connected to an antenna, will produce the radiation of radio waves. Now refer to the schematic diagram of this transmitter in Fig. 446. The master oscillator-power amplifier

type of circuit with a Hartley oscillator is shown in the diagram. In its circuits is generated the carrier frequency that is delivered to the power amplifier whose output in turn feeds the antenna system by means of an antenna transformer. Antenna tuning is accomplished by changing the length of the trailing wire, after the desired frequency has been set on the master oscillator. In order to make it possible for the operator to adjust the antenna tuning satisfactorily, a small meter for indicating resonance, called an antenna ammeter, is coupled to the antenna circuit through a transformer. The meter is mounted conven-

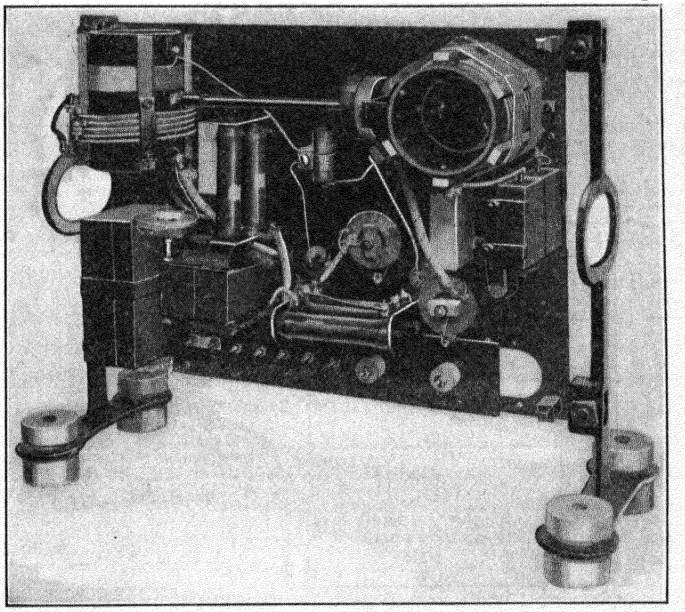

FIG. 445.—Another view of the ET-3653-A airplane transmitter, with protective frame removed.

iently within sight of the pilot or operator. It is provided with a 0–5 ampere scale and is operated from a thermocouple so that no radio-frequency current is carried by the leads connecting the meter to the transmitter. The meter tells at a glance when the antenna is properly resonated and normal antenna output is obtained.

There are *two methods of signaling provided* by this transmitter—radio telephone and continuous wave (c.w.) telegraph. Radiophone communication is effected by means of an anti-noise microphone, microphone transformer, and modulation reactor, using the Heising or constant current system of plate modulation.

In brief, the reactor, marked *M* on the schematic diagram, keeps the direct current supplied to the plates of the modulator and power amplifier at a substantially steady value, and the audio current in the microphone circuit causes variations in the plate current passing through the tube by varying its grid voltage through the resistance coupling unit, marked *R*1, *R*2, and *C*. In addition to the microphone and output windings, the microphone transformer has a side-tone winding which is connected across the headphones of the two operators and across the receiver output. The purpose of this is to allow the headphones to be used for interphone communication between the pilot

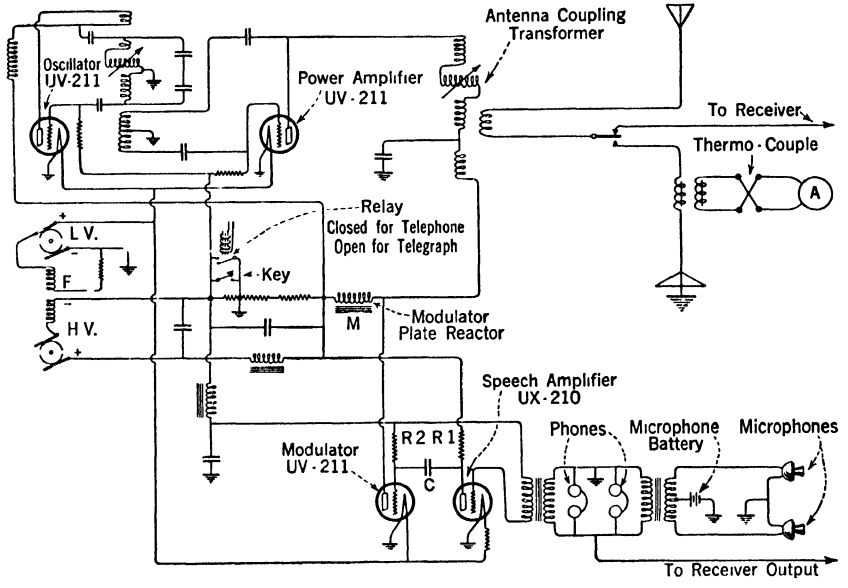

FIG. 446.—Schematic diagram of the ET-3653-A airplane transmitter.

and co-pilot, or operator at all times on board the aircraft, and also for listening-in on what is being transmitted over the radiophone and for the reception of incoming radio signals without the necessity of switching any headphone connections.

Telegraph communication is obtained by means of a manually operated key, the tubes being biased to cut off when the key is up, and normal bias and consequently normal output being obtained with the key depressed. There is no radiation from the transmitter when the key is up, since plate current is then zero.

For aviation purposes a special air-tight telegraph key is used which eliminates all possibility of sparking contacts igniting fumes. Also, it is

necessary to use an *anti-noise microphone* similar to the type shown in Fig. 443, this being constructed so that motor and propeller noises will have practically no effect on it, but when the operator speaks directly into it the diaphragm will be actuated and his voice will be transmitted. The control box unit shown connected to the aircraft transmitter contains switches for changing from "send" to "receive" and from "c.w. telegraphy" to "telephony," and the necessary jacks for inserting the plugs attached to the key, microphone, and headphones.

In regard to the waveband covered by this 100-watt transmitter it should be mentioned that transmission can be effected on either of two frequency ranges, namely, 2250 to 2750 kc. (109 to 133 meters) and 316 to 600 kc. (600 to 950 meters). With the radio-frequency circuits adjusted for the latter band, either a trailing antenna or fixed antenna may be used.

Power Is Obtained from a Wind-Driven Generator or a Dynamotor.—In connection with aircraft transmitters the voltage supply for the various circuits offers special problems. At the present stage of development of aircraft radio the transmitters and the receivers used in the larger type planes normally obtain their power supply from a wind-driven generator or a dynamotor which is fed from the plane's storage battery. The battery usually is a 12-volt landing light battery and is kept in a charged condition by a wind-driven generator. The dynamotor method makes it possible to transmit when a plane is not in flight, which would be especially advantageous to a pilot in case of a forced landing. A wind-driven generator is mounted outside the plane, usually on a strut, and is driven by a single blade propeller which is self-adjusting so that it maintains the speed of the generator at about 4000 r.p.m. This regulating feature is due to the centrifugal force developed with increased speed which acts on weights so placed as to cause the blade to turn through an angle of pitch. An advantage of this type of drive is that constant voltage is maintained under varying flying speeds. In brief, the torque component acting on the blade overcomes the torque of the generator.

A wind-driven generator for the 100-watt transmitter just described would have a high-voltage winding, marked *H.V.* in Fig. 446, which would deliver 0.4 ampere (400 ma.) at 1000 volts d-c. for plate and bias voltages, and also a low-voltage winding, marked *L.V.*, which would supply 12 volts to the tube filaments. However, if a dynamotor were used the tube filaments would be connected to a 12-volt landing light battery which puts a drain on the battery of about 64 amperes, and the dynamotor would furnish the required plate potential. A retractable generator is one that can be swung into the fuselage when not in use.

" Ignition Shielding " and " Bonding " in Airplanes.—Many obstacles had to be overcome in aircraft construction before it was possible to eliminate interference which prevented clear radio reception. The most noticeable disturbance comes from the ignition wires leading from the magneto to the spark plugs. This is due to the electromagnetic waves which are radiated by the conductors forming a circuit wherein an electrical spark occurs, such as magnetos, for example, which generate the high voltage for the spark plugs. To reduce this difficulty to a negligible amount the ignition cables are covered with a copper-wire braiding which is suitably grounded. In many cases it requires shielding

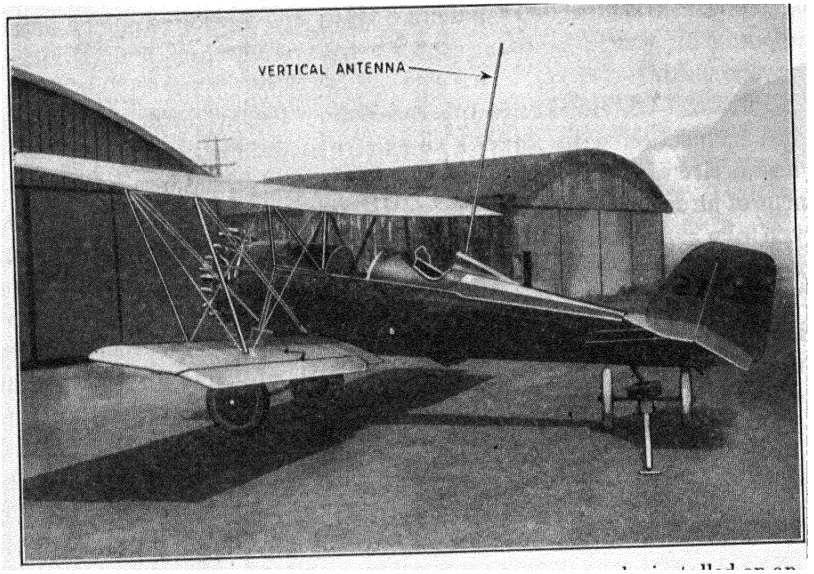

FIG. 447.—Showing how the vertical-pole type antenna may be installed on an airplane. This type antenna is usually employed for reception only.

of spark plugs by means of special copper shields to reduce radiation by the plugs themselves.

All airplanes on which radio communication equipment is to be installed must be thoroughly bonded. The term *bonding* means that all metal parts of the airplane are connected by electrical conductors which are attached during the process of manufacture, this being done to eliminate the danger of sparks between metal parts.

Aircraft Antennas and Equipment.—Considerable experimentation is being conducted to find a type of antenna most suitable for aircraft radio transmission and reception. There are, in general, two types of antennas in use; namely, the *fixed* antenna and the *trailing* antenna.

One type of fixed antenna, the *vertical* type, is shown in Fig. 447 on a monoplane which carries mail. A vertical antenna is known also as a *pole* antenna or *strut* antenna.

Many planes use the fixed type antenna which may be erected either in a vertical or horizontal position between the wing tips, or in some other manner, and although this type has proven good for reception, it nevertheless limits the transmission range. As the name implies, the trailing type floats under the plane while it is in flight and, therefore, it must be reeled out after taking off and later reeled in before a landing is made.

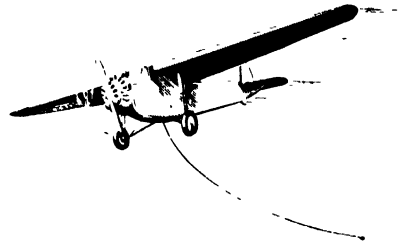

FIG. 448.—The trailing wire antenna is used on many airplanes to increase transmission range.

Under ordinary flying conditions and at the wavelengths used in aerial navigation, it has been found that a trailing wire (Fig. 448) of 100 or 200 ft. is a far better radiator of electromagnetic waves than a short fixed wire of perhaps only 6 to 50 ft. or more in length. The usual practice in antenna construction is to employ a fixed type for a one-man plane because here the pilot is also the operator and he cannot conveniently handle an antenna reel. In a one-man plane if only radio-reception is desired the vertical-pole type usually answers the purpose, but where two-way communication is to be carried on, a greater range

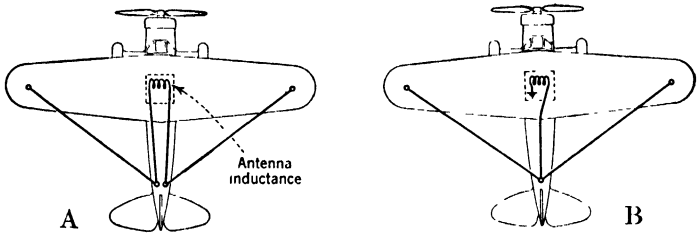

FIG. 449.—Showing two types of horizontal fixed antennas installed on airplanes for two-way communication.

can be covered by using either of the horizontal fixed types shown in sketches *A* and *B*, Fig. 449. Sketch *A* shows antenna conductors supported by insulators and stretched from the wing tips to the rear of the fuselage to form what is called a *doublet*. The conductors join two other wires called transmission lines, which terminate at either end of the antenna inductance of the radio transmitter. In sketch *B* a slightly different form is used which may be classed with a T-type antenna

since the two conductors are connected at the rear of the fuselage near the fin and are spliced at this point with a wire which we ordinarily call a lead-in; the latter wire runs to one end of the antenna inductance and from the other end of the inductance a ground connection is made at some metallic part of the plane. The name *dipole* is often given to an antenna of this type. It is to be remembered that the long trailing wire increases the transmission range to more than twice that of a fixed antenna.

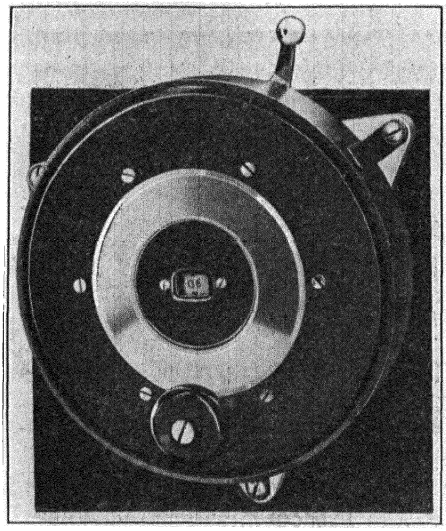

FIG. 450.—Insulated reel installed on aircraft for paying-out and drawing-in the trailing wire antenna—Western Electric type.

If a radio transmitter is to be operated with a trailing wire antenna then an antenna reel and guide must be installed in the pilot's cabin of the airplane. An insulated reel like the one shown in Fig. 450 has been developed for use in paying out and drawing in the trailing wire antenna. The reel may be installed at any place in the fuselage convenient for the pilot or operator. It is equipped with a centrifugal brake to maintain uniform speed in paying out the antenna, and also a friction brake which holds the antenna to any given length, and a dial which gives approximate readings in meters indicating the length of the antenna wire out at any time. The antenna wire, which is usually of copper-clad steel and about 300 ft. long, runs from the reel and passes out through the fuselage by way of an insulating tube, called a *fairlead*. A clamp holds the tubing in place where it passes through the floor of the plane. The reel and the fairlead or guide, which projects above and below the floor of the fuselage, are shown in Fig. 451.

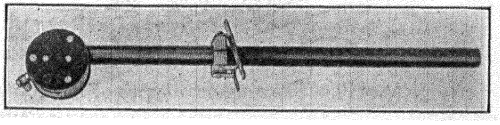

FIG. 451.—This *fairlead*, manufactured by the Western Electric Company, is an insulated tube which permits the antenna wire to pass through the fuselage of an airplane.

There is a chamber at the top of the guide containing a steep-pitched pulley wheel which grips the antenna tightly, thus insuring a

good contact at all times. An insulated antenna lead from the transmitter passes through an opening in the side of the chamber and makes positive brush contact with the axle of the pulley wheel over which the antenna passes. At the lower part of the photograph in Fig. 450 can be seen the knob on the crank which is used to reel in the wire when a landing is to be made, and at the top is shown the brake lever for locking the reel against rotation. A small weight attached to the remote end of the wire keeps the wire floating or trailing properly when the plane is in flight.

There is always a compromise to be made when one chooses between an antenna of the fixed type with its limited range of radio communi-

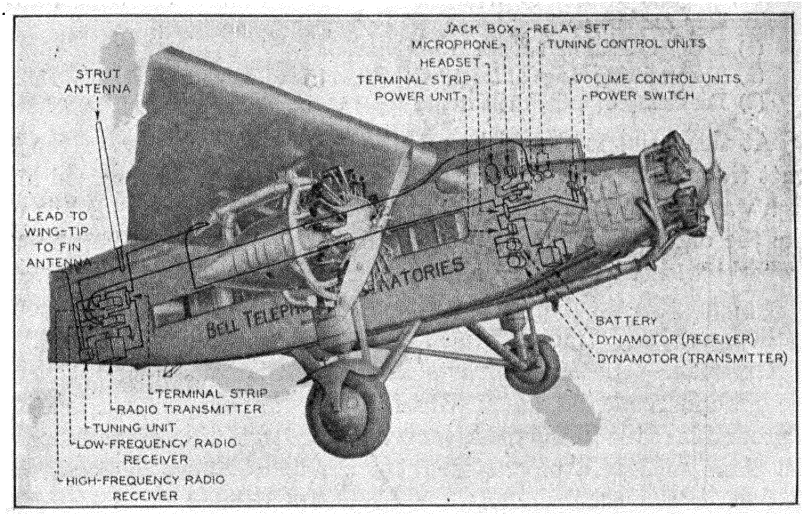

FIG. 452.—Phantom view showing the arrangement of a typical aircraft radio installation which provides for two-way communication. *Courtesy Western Electric Company.*

cation and an antenna of the trailing type. In one case the antenna is always in a fixed position and, therefore, requires no attention on the part of the pilot or operator, whereas, in the other case, the antenna does require a certain amount of attention. However, regardless of what type is used for aircraft, special care must be exercised to prevent the wire from becoming detached or breaking off in flight, which might possibly result in its becoming entangled with the control cables of the plane. It is quite obvious that if the control cables ever became fouled from this cause a serious catastrophe might result.

If it is desired to use a fixed vertical antenna in preference to the trailing wire, this may be accomplished by using a tuning unit designed

to couple the transmitter into the antenna. By referring to the phantom view of a complete two-way aircraft communication system in Fig. 452 one can grasp the idea of how a vertical antenna may be mounted permanently midway between the fuselage and tail.

The advantages and disadvantages of the fixed antenna and the trailing antenna are:

Fixed Antenna:

(1) Less flexible as to tuning.
(2) Takes up space in hangar. A pole antenna is about 6 ft. high.
(3) Possibility of fouling wires in event of breakage in flight.
(4) Less range for given power.
(5) For reception it has practically no directional tendencies.

Trailing Antenna:

(1) Less ignition interference in receiving.
(2) Transmitting range at least twice that of fixed antenna.
(3) Possibility of using the antenna itself as the tuning agency.

At this point it should be mentioned that, in the case of the 100-watt transmitter previously described, when it is to be operated in the high wavelength band from 600 to 950 meters, an antenna loading unit, like the one in Fig. 443, is used so that the antenna can be resonated properly without requiring a very long trailing wire. It is estimated that about 225 ft. of wire is sufficient to cover this band. Of course, in the lower band, from 109 to 133 meters, this unit is not required.

Grounds.—The student invariably asks the question, " Where is the ground made on an airplane? " The answer to this is simple. A ground is made in the most convenient manner to some metal part of the plane such as a pipe, a strut, or crossbar. Since all metal parts that enter the construction of a plane are bonded, then everything metal about the plane represents the ground. No specific recommendations can be given in this matter since conditions vary in different planes, but in general the ground is made by means of a braided copper wire attached to an approved ground clamp which is bolted to the metal part selected after the surfaces have first been thoroughly scraped and cleaned to make a good electrical contact between the clamp and the metal part.

RADIO RECEIVERS USED IN AVIATION

As explained in the early part of this chapter, practically every one-man plane engaged in scheduled flying is equipped with a radio receiver, called a *beacon receiver*, because it is used solely by the pilot to pick up directive radio range beacon signals, weather broadcasts, and other information transmitted by the airway stations. This kind of information is practically all that a pilot requires to be able to fly

a chosen course with the least delay and with greatest safety. With a beacon receiver and visual system indicating device in operation the pilot may watch the reed indicator and also listen to either the radio range signals or the broadcast information, since these services are transmitted on the same frequency. In foggy weather when the visibility is poor and a pilot cannot see landmarks he is then forced to rely on beacon signals to fly along a course and arrive safely at his landing field. Herein lies radio's greatest usefulness to pilots in flight.

However, in addition to the beacon receiver, an air-transport plane will generally have a second receiver, called a *communication receiver*, operated in conjunction with a transmitter for use in two-way communication between the pilot in flight and ground terminals. Although both types of receivers, *beacon* and *communication*, are operated on different frequency bands, yet the receivers have the same general

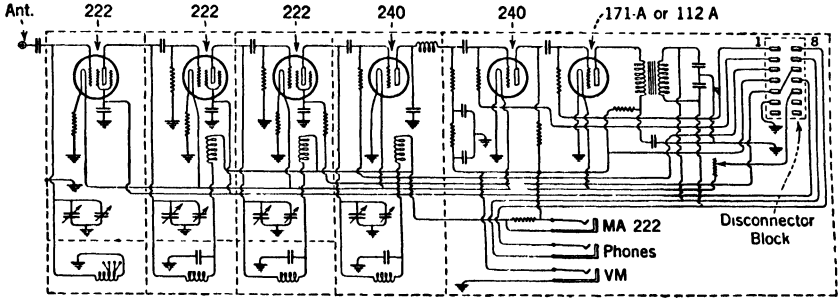

FIG. 453.—Schematic diagram of an aircraft beacon receiver consisting of three stages of tuned radio-frequency amplification, a detector, and two stages of audio-frequency amplification.

features in that screen-grid tubes are employed and the sets are made extremely light in weight and are designed to stand up under extreme vibrations and severe shocks encountered during heavy landings. Their compact construction enables them to be installed in any available space in the plane, hence the remote control unit with headphones and tuning knob only need be mounted within reach of the pilot.

Aircraft Beacon Receiver.—This receiver, like all others, contains everything necessary to convert the radio-frequency signals picked up by the antenna into audio-frequency signals. A glance at the schematic diagram of the beacon receiver in Fig. 453 shows that it consists of three stages of tuned radio-frequency amplification, or four tuned circuits, a detector, and two stages of audio-frequency amplification. Note that resistance coupling is used between the detector and the audio-frequency stages and that it employs plate rectification method of detection.

The radio-frequency stages employ type 222 screen-grid tubes, and in the detector and first stage of audio-frequency amplification type 240 tubes are used. Either a 112-A or 171-A tube is used as the second-stage audio or output tube. The circuit layout is arranged for modulated signals, no provision being made for receiving signals from continuous wave transmitters. In the radio-frequency circuits use is made of tuned impedance coupling between the 222 tubes, an arrangement which makes possible four tuned circuits. A gang condenser is used for the four tuned circuits; it is tuned by a single continuously variable tuning control. Owing to the splendid amplifying properties of the screen-grid tubes and design of the circuit the overall gain in voltage amplification will vary between one million and seven million.

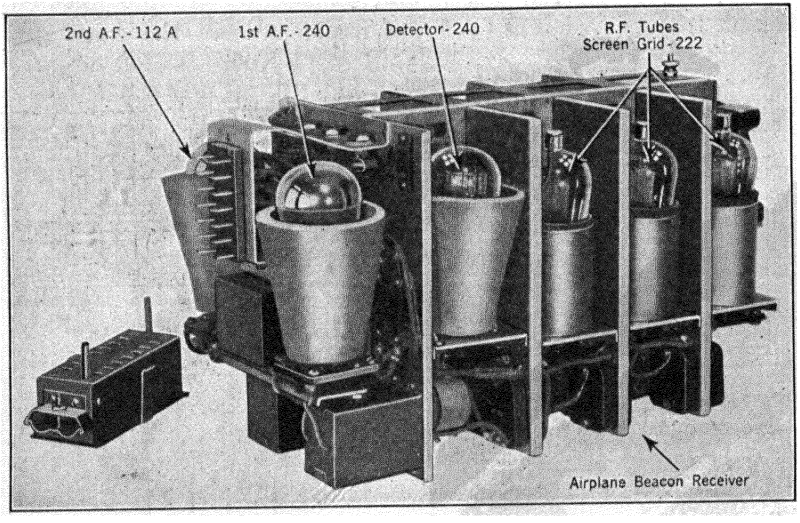

FIG. 454.—The chassis of RCA model AR-1286 radio beacon receiver for aircraft.

The volume control arrangement provided to adjust the overall gain is a potentiometer control of the screen-grid voltage, the potentiometer being located in the remote control unit.

Refer to Fig. 454. This photograph shows the chassis of a beacon receiver as it appears after removal of the cover. Note how the different stages are placed in shielded compartments and also the connector block at the left which provides a convenient means for detaching the power leads from the receiver when servicing the set. In the four shielded compartments directly to the rear of the vacuum tubes are four variable tuning condensers; these cannot be seen in the photograph. The tubes are protected against vibration by spring sockets and " rubber foam " skirt vibration dampers.

The beacon receiver under discussion is model AR-1286 (RCA) and is designed for operation with a pole antenna. The antenna consists of about 6 ft. of insulated wire which passes through a stream-lined wooden mast, or in some installations the antenna itself is an all-metal mast which is thoroughly insulated where it enters the fuselage; this type is usually erected back of the pilot's cabin. The receiver parts are prop-

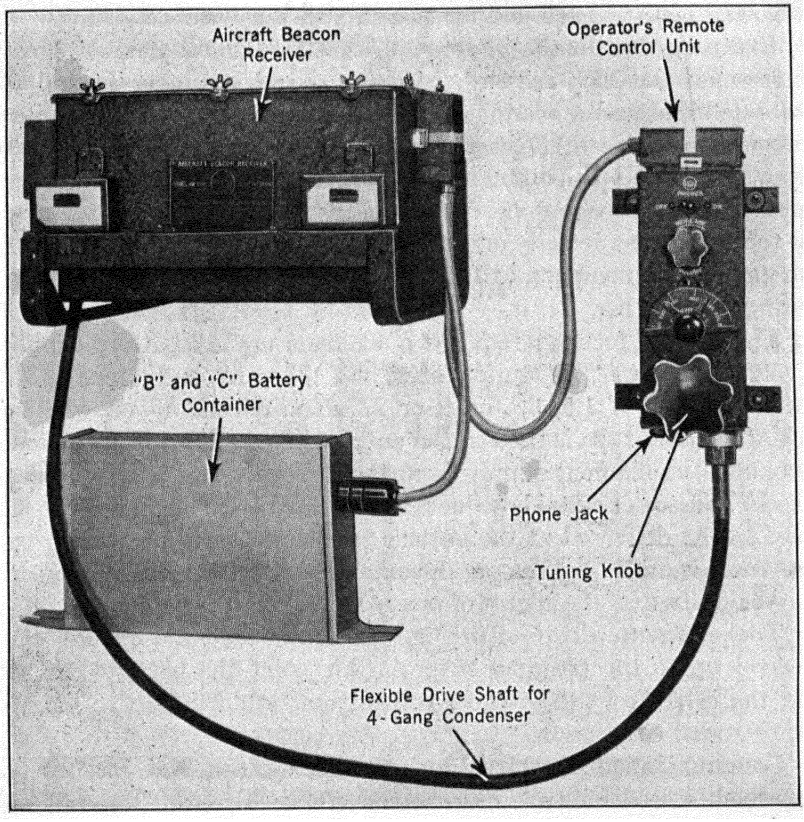

FIG. 455.—An RCA radio beacon receiving installation for aircraft which provides for remote control operation.

erly cushioned so that they will stand up under excessive vibration and shocks due to heavy landings. The photograph in Fig. 455 gives a good idea of the special features involved to provide remote control operation in radio receivers designed for aircraft. The receiver and battery supply unit can be located wherever space is available but the remote control box must be mounted within easy reach of the pilot or operator. A flexible steel shaft which runs through tubing and the

shielded conductor cables serves as the connecting link between these parts. The tubing is made long enough to reach from the set to the remote control box, and high-gear ratio is used on the shaft to reduce to a minimum the "twist" and "back lash" which otherwise might cause difficulty when tuning. The electrical connections necessary between the receiver, the remote control box, and the battery box and landing light battery are made through shielded conductor cables with suitable plugs and jacks at each end for ease in attaching and detaching.

It can be seen in the photograph that the remote control box includes an " On-Off " switch, a volume control, a tuning control with calibrated dial and a headphone jack. The indicating dial is equipped with a set of adjustable stops so that the tuning may be limited to a given band, the two pointers being provided so that the operator may mark certain settings if he desires. It is interesting to mention that all the important letters and figures on the panel are filled in with a luminous paint compound to allow the dial markings to be easily read during night flying.

This beacon receiver requires a filament or "A" battery supply of 6 volts, a plate or " B " supply of 45 and 135 volts, and a bias or " C " battery supply of 1.5, 3, and 9 or 27 volts, depending on whether a 112-A or 171-A tube is used in the output stage. Since it is customary to obtain the filament supply from the aircraft's landing light battery a series resistor of suitable value must be inserted in this circuit to drop the 12 volts delivered at the battery terminals to the required 5 volts. Provision is made so that a dynamotor-voltage divider combination may be utilized as the source of power for the plates of the tubes.

The schematic diagram in Fig. 453 shows only the circuits of the receiver up to the terminal strip; at this point the battery box cable and the cable from the remote control unit are attached to complete the electrical connections.

Communication Receiver for Aircraft.—Since the receiver just described is used for *two-way communication* with ground stations it is designed to work on the same antenna as the transmitter and is therefore arranged for reception of telephone, I.C.W., and C.W. signals. Telephone is obviously the quickest and simplest form of communication, but code is also used on the larger planes which carry an operator or observer. Code is the only type of signal that will get through at times when great distances must be covered and in areas where static is unusually heavy. These adverse conditions are met especially along the international airways system. The diagram in Fig. 456 is a schematic of the four-tube communication receiver known as RCA model AR-1308 for use in airplanes. As the diagram indicates, the circuit arrangement

is simple and employs only one stage of radio-frequency amplification, a regenerative detector which operates on the principle of grid rectification since it is provided with a grid leak and condenser, and two stages of transformer coupled audio-frequency amplification.

An output transformer and jack are used into which the pilot's headphones are plugged. As the arrow in the diagram indicates, inductive coupling is provided between the antenna and the first tuned circuit, the coupling being adjusted, however, at the time of installation and only for working on the high-frequency band, or from 3300 to 6700 kc. It can also be arranged for working in the intermediate-frequency band or from 240 to 500 kc. The schematic shows a 222 tube used in the radio-frequency stage, two 201-A's used respectively in the regenerative detector and first audio stage, and a 112-A in the

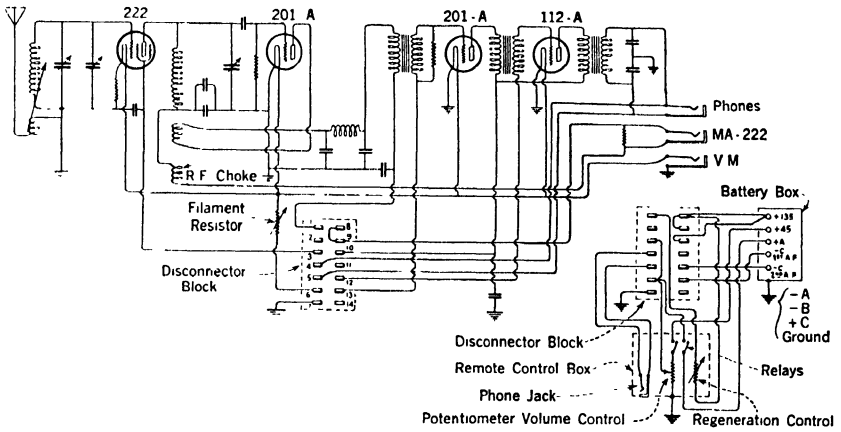

FIG. 456.—A schematic diagram of the RCA type AR-1308 aircraft communication receiver.

second audio or output stage. However, provision is made to use either a 201-A or 171-A in the output stage, depending on the output signal voltage desired.

In regard to its general outside appearance the communication receiver now under discussion and the beacon receiver pictured in Fig. 455 are constructed somewhat alike inasmuch as both receivers are intended for remote control operation. It is common practice in aircraft receivers to employ a combination 12-volt landing light battery and a charging generator for the "A" supply, and in this case a resistance must be inserted in series with the source to lower the battery's 12 volts to the 5 volts required for the filament circuit.

Short-Wave Radio Receiver for Ground Stations (12–80 Meters).—Fig. 457 is a diagram of a commercial high-frequency receiver which may be used at airport terminals or at any other place for the reception of continuous wave telegraph signals or radio telephony within a frequency range of 3750 to 25,000 kc. (12–80 meters) which is covered by three sets of plug-in coils. An additional set of coils may be used to cover 1200 to 3750 kc., or 80–150 meters. This is the circuit arrangement of a model AR-1496D receiver and, as shown, it consists of a tuned radio-frequency amplifier stage, a regenerative detector, and a two-stage audio-frequency amplifier. A type 222 screen-grid four-electrode tube is used in the radio-frequency amplifier. Considerable radio-frequency gain is secured by reason of the high amplification

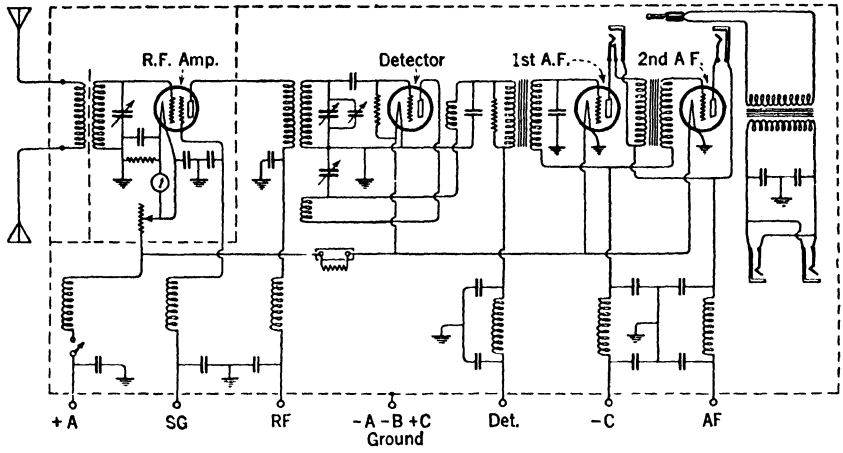

FIG. 457.—Schematic diagram of a short-wave receiver, model AR-1496-D, which is provided with plug-in coils to cover a frequency range of 3750 to 25,000 kc. (12–80 meters).

factor of the 222 tube and, furthermore, the use of this tube eliminates the need for external neutralization. The detector uses either a 240 or 841 tube and functions on the grid rectification principle with regeneration obtained by the use of a fixed tickler and controlled by a variable by-pass condenser. The detector regeneration circuit is so adjusted that oscillations start and stop smoothly at all frequencies within the range. The output of a two-stage audio-frequency amplifier employing either two 201-A or 210 tubes can be taken directly from the plate circuit or through an output transformer. Note that jacks are provided so that two sets of headphones can be used in parallel and, furthermore, they can be plugged into the output of the first audio or the second audio amplifier.

The photograph of the 12–80 meter set in Fig. 458 shows the principal units mounted in three separate shielded compartments as follows: (1) the input coupling coil, (2) the variable condenser, r.f. grid coil, and by-pass condenser, and (3) the detector and audio stages.

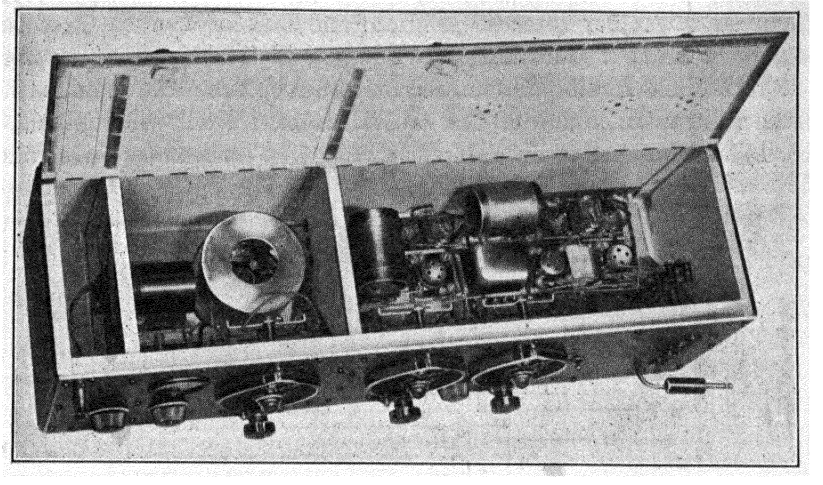

FIG. 458.—Front and interior view of the RCA model AR-1496-D short-wave receiver.

AVIATION RADIO EQUIPMENT FOR TWO-WAY COMMUNICATION

Two-way communication in aviation requires that the equipment and controls be so arranged as to provide a quick and simple means for carrying on direct radio telephone conversation between planes in flight and ground stations. The complete equipment is divided into two independent sets of units or parts, one set for installation in the plane where space is at a premium and the other set for installation at the ground station.

The two-way communication equipment described in the remainder of this chapter is a development of the Western Electric Company and is designed for operation on short waves. The transmitter used in the airplane is known as model 8-A and the receiver as model 9-B. These sets employ Western Electric tubes throughout.

The equipment which is installed in the airplane consists principally of a short-wave radio transmitter and a short-wave radio receiver, together with the sources of power for each of these units. In addition to these main units there are the necessary microphones, headsets, and remote volume, tuning and switching control apparatus. The switching arrangement for the two-way system is made to control a long-wave

radio receiver which is considered a necessary unit of a typical airplane radio installation—necessary because a receiver of this type operates on the low frequencies within the range of the weather signal broadcast stations of the Department of Commerce. By proper tuning of the receiver the pilot or operator can pick up radio range beacon signals and weather forecast information and, for convenience, this set may be bridged to use the same antenna as the short-wave receiver.

Short-Wave Radio Transmitter for the Airplane.—An examination of the schematic circuit of the radio transmitter and microphone in Fig. 459 shows that it consists essentially of a temperature-controlled

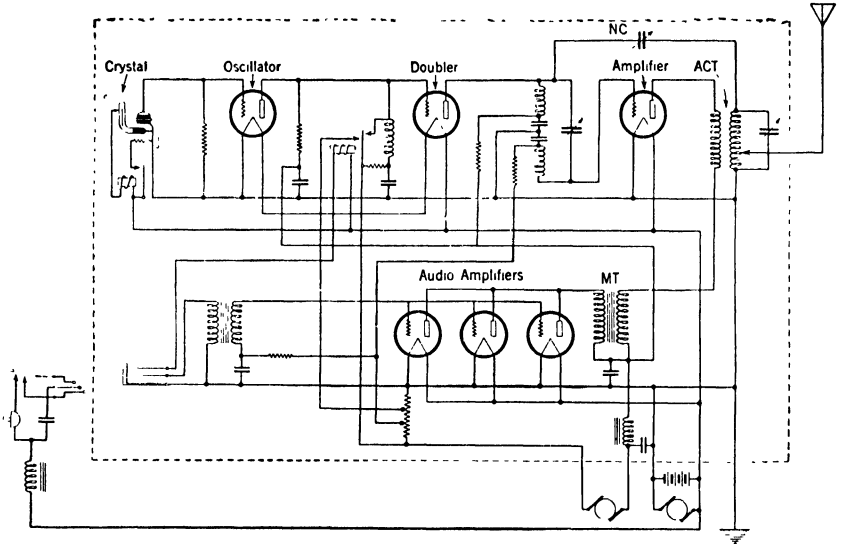

FIG. 459.—A schematic diagram of the Western Electric model 8-A airplane transmitter.

quartz crystal oscillator, a frequency doubler, a modulating power amplifier, and an antenna-tuning unit. Also, there is the speech input circuit to which the microphone is connected and several audio-frequency amplifiers which are used to step up the voice currents received from the microphone to a suitable level before they are introduced into the modulating amplifier circuit to act on the high-frequency oscillations present in the circuit. This high frequency is the carrier frequency that is radiated from the antenna through space. The operating frequency is maintained within certain prescribed limits as required by the Federal Radio Commission, this being possible under all conditions by the use of the quartz crystal oscillator.

Two 5-watt and four 50-watt Western Electric vacuum tubes are

used in the radio transmitter which gives, at complete modulation, a peak power output of 200 watts. A high percentage of modulation means that the voices are heard distinctly, or we say the articulation is good, and this is brought about by the action of the voice frequencies on the high-frequency oscillations which causes them to vary in amplitude between great limits. It is important to hear distinctly, for with poor reception errors can easily occur.

A general discussion of the relationship of the various circuits in an aircraft transmitter will show how many of the radio principles which we have already discussed are applied in practice, such as vacuum tube oscillating circuits, how power is obtained for energizing the vacuum tubes, and so on. In the following paragraphs we will explain the purpose of these circuits and also the special features which are peculiar to aviation equipment.

Let us first consider the *crystal oscillator*. This unit is assembled in an isolantite holder provided with three prongs in the base for connection to the ground, heater, and thermometer contacts, and is designed to plug into a socket similar to one which is ordinarily used to hold a vacuum tube. There is a terminal on the top for connection to the grid of the oscillator tube.

The quartz crystal oscillator is clamped firmly between two metal electrodes, one of which is held at a temperature of 55° C. by an imbedded electrical heater. The heater is controlled automatically by a thermostat of the mercury-column contact-making type. The temperature-control device consists of a cylindrical metal shell, a resistance unit and the contact-making thermometer, and the whole unit operates to control the heat as follows: The thermometer contacts which are short-circuited by the mercury column at the operating temperature operate a relay which in turn controls the amount of current passing through the wire of the heater element. One end of the shell forms one contact surface for the crystal as is clearly shown in the diagram in Fig. 459.

This crystal is used to control the frequency of the oscillations which are generated when the crystal is connected to a vacuum tube, that is, to the 5-watt oscillator in the circuit diagram. The crystal is very carefully ground to give it the proper thickness so that the oscillations generated by it will have a carrier frequency which is one-half of the frequency used to radiate for communication purposes. It should be understood that a vacuum tube circuit can be adjusted to produce several strong harmonics along with its fundamental, and that one of the harmonics will be selected by an associated oscillatory circuit when the latter is made resonant to that particular harmonic frequency.

Fig. 460 is a photograph of the interior of the airplane transmitter now under discussion; this view illustrates the position of the crystal holder and the grid connection to the grid of one of the 5-watt tubes.

To continue our explanation, a 1050-volt circuit leading from the generator end of the dynamotor, shown in the lower part of the diagram, furnishes the d-c. plate voltage required for the 5-watt oscillator tube, but since this voltage is much higher than that required for a 5-watt

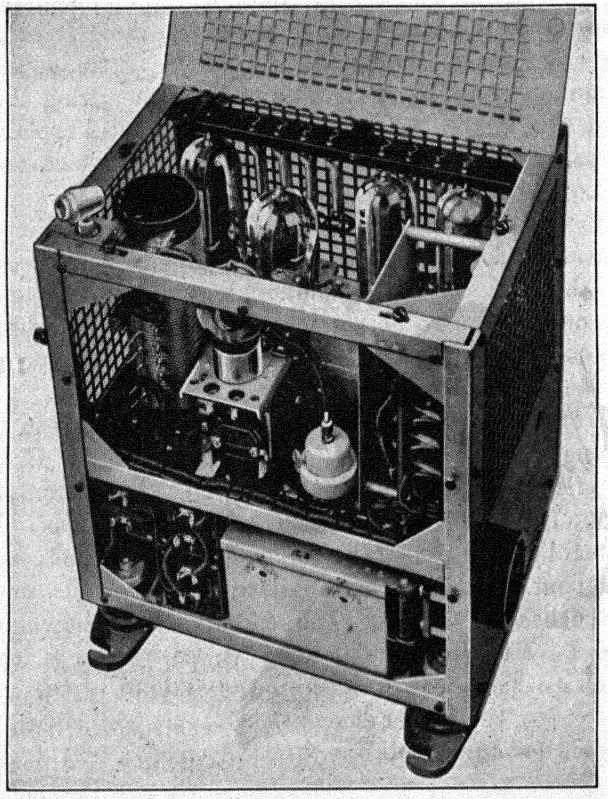

Fig. 460.—An interior view of the Western Electric Model 8-A airplane transmitter.

tube it is lowered to the proper value by causing the plate current to flow through a series resistance. The drop in voltage obtained across this plate resistor equals the value of its resistance in ohms multiplied by the amount of plate current in amperes passing through it. Also, a condenser is inserted between the low side of this resistor and one side of the filament, and the series resistance and condenser together form a radio-frequency circuit from plate to ground. In the grid circuit of the next tube marked " doubler " there is a tapped coil

which provides the necessary plate inductive reactance for the tube and its associated circuits to oscillate. The oscillator is controlled for simplex operation of the transmitter by a relay which short-circuits the grid coil just mentioned when the transmitter is not in use, this being the position the relay occupies in the diagram.

In this transmitter the plate of the oscillator is coupled to the grid of the second 5-watt tube, or doubler, by means of a condenser called a " stopping " condenser. The grid circuit of the doubler is untuned and the r.f. energy is transferred from the plate of the oscillator through the stopping condenser, the latter being used to prevent the d-c. plate voltage of the first tube from being applied directly to the grid of the second tube. The tube in the frequency doubler circuit is given a high negative grid bias provided by a grid-leak resistance in addition to the usual bias voltage which is obtained by connecting the grid return to one end of a tapped resistor shown in the lower central part of the the diagram, the other end of the resistor being connected to the filament. In addition to the doubler circuit fulfilling the function of providing a desired harmonic which becomes the *carrier*, it also amplifies this high-frequency energy to a certain extent as determined by the normal amplifying properties which are common to the action of every vacuum tube. By this we mean that for a given amount of operating voltage applied to the grid there is always produced in the plate circuit a current which fluctuates in greater proportion than the grid voltage which caused the action.

The plate circuit of the second tube is tuned to the double frequency and is coupled by a split coil to the grid of the modulating amplifier which is the third tube. Positive plate voltage for the second tube is obtained from the high voltage d-c. dynamotor through a series resistor, as indicated in the diagram, in order to drop the voltage to the required value.

Now that we have the required transmitting frequency provided by the doubler circuit, then it is only necessary to step up the power of the oscillations to increase the transmitting range and to cause them to be modulated according to the voice currents resulting from the sound waves which strike the microphone diaphragm when it is spoken into. Both of these functions are performed by the third or final tube in the radio-frequency portion of the transmitter. This is known as the *modulating power amplifier.*

The output of the doubler tube excites the grid circuit of the final radio-frequency amplifier, which is a 50-watt tube, and it delivers a carrier power of 50 watts to the antenna circuit through an antenna coupling transformer marked *ACT* in the diagram in Fig. 459. This

final stage of amplification is neutralized to prevent self-oscillation in the circuit, the neutralizing adjustment being made by a variable condenser marked *NC*.

The plate supply to this final stage is modulated by introducing into its plate circuit the speech frequency output of three 50-watt vacuum tubes connected in parallel. This series of tubes comprises the audio-frequency portion of the transmitter. The grids of the three audio amplifiers are fed from the output of the airplane microphone through an input transformer, and the transfer of the audio-frequency power from these amplifiers to the plate circuit of the radio-frequency amplifier is through the transformer *MT* previously mentioned.

Because of the small space available for radio equipment and the necessity for keeping the carrying weight of the plane down to a minimum, this entire transmitter has been very compactly designed as the photograph indicates. Its dimensions are approximately 17 in. high, 16 in. wide, and 12 in. deep, and its weight, including tubes, is only a little more than 32 lb.

The Antenna System.—Either one of two types of antenna systems may be employed with the Western Electric high-frequency transmitter just described. The antenna may consist of wires stretched from the wing tips to the fin of the plane, or it may consist of a loaded strut antenna with wires stretched from the wing to the top of the strut and another wire which is run from the fin to the strut with the lead-in taken off from the base of the strut.

How Power Supply is Obtained.—Two of the most difficult problems encountered in aircraft radio equipment are the source of power and the antenna system for the transmitter. We will first discuss the source of power. There are three methods that can be used to obtain the requisite voltages for the tubes in the transmitter and receiver. These methods are: (*a*) An engine-driven generator, (*b*) a wind-driven generator, and (*c*) a dynamotor used in conjunction with a storage battery. Airplanes operated by the various air-transport systems carry passengers, mail, and express and, therefore, if the operaton of a plane is to be financially profitable consideration must be given to the "pay load"; hence, all loads which do not produce a revenue must be necessarily limited. Aside from the fact that the radio equipment must be light in weight and compactly built there is the problem of voltage regulation which must be considered in the case of power supply when either a wind-driven generator or an engine-driven generator is used.

The photograph in Fig. 461 shows a wind-driven generator fastened to the struts of a plane. The generator is equipped with a single-blade self-regulating propeller.

A brief outline of the main considerations applying to each method for obtaining radio power is given in the following paragraphs:

(*a*) When an engine-driven generator is employed the plate supply for the transmitter is obtained from a generator geared to the airplane engine. Special control must be provided to maintain constant voltage automatically at all engine speeds. For a transmitter of the type described in this section, 1050 volts would be taken from the plate supply while the regular airplane battery floated across the low potential supply would furnish about 12 or 14 volts which would be used for heating the cathodes and the

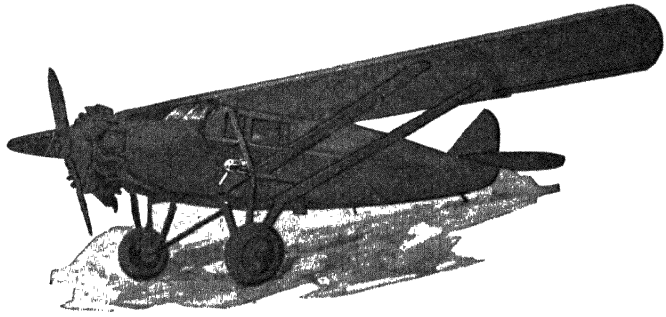

FIG. 461.—Showing how a wind-driven generator may be mounted on a plane. The generator is employed to supply certain operating voltages for the radio equipment.

filaments of the tubes, and to supply current to the heater element of the thermostat control.

(*b*) In the case of a wind-driven generator both the high and low voltages, or the plate and filament voltages, are supplied by the generator, which is therefore called a double-voltage generator. Since it must be installed outside the plane it is housed in a stream-lined case. The generator is driven by the action of the wind on a small constant speed propeller, the latter being self-regulating with a starting torque such that any airplane speed in excess of seventy miles an hour is sufficient to cause the generator to come up to speed and deliver its rated output voltages. A double-voltage generator has two commutators and if used for the airplane set just described the generator would be designed for a low-voltage output of 20 amperes at 12 volts and, also, a high-voltage output of 0.4 ampere

(400 milliamperes) at 1050 volts. One type of wind-driven generator is shown in Fig. 462.

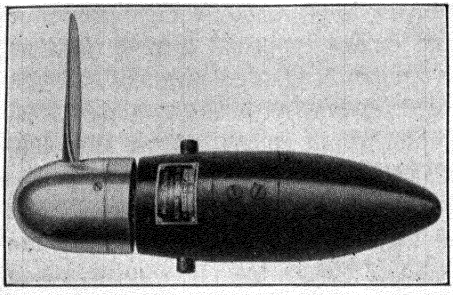

FIG. 462.—A type of wind-driven generator manufactured by the Western Electric Company.

(*c*) With the third method a light-weight dynamotor is used for the plate supply. The dynamotor is operated from a 12-volt battery, which directly supplies the filaments of the tubes. A 12–15 volt, 50-ampere generator connected to the engine of the plane is necessary in order to keep the battery charged. Fig. 463 shows a typical dynamotor.

Although a double-voltage wind-driven generator may be used to furnish power to the airplane set under discussion, a dynamotor is most

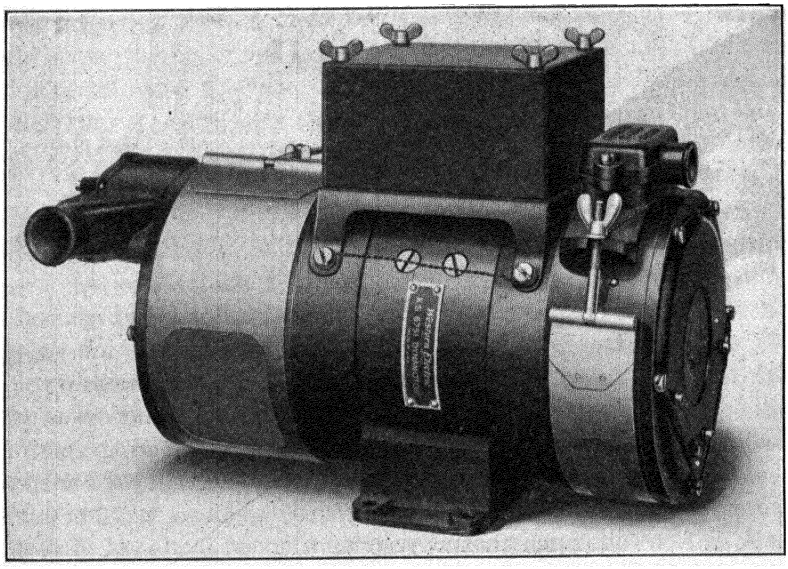

FIG. 463.—A Western Electric dynamotor for use on airplanes to supply plate voltages to the vacuum tubes.

generally preferred because it permits the transmitter to be operated while the plane is resting on the ground. If the dynamotor method is utilized a power plug with three pins is provided for the transmitter.

Two of these are guide pins and the third is a locking pin. The locking pin is located diametrically opposite the two guide pins. After the plug is inserted in the socket, a turn of the knurled ring on the outside of the plug locks the plug securely. While any one of these three methods may be used to obtain power, the one in (*c*) appears the most practical since, with a battery and dynamotor, routine testing would be simplified and, furthermore, a pilot would be able to transmit from a forced landing. This type of power supply would include two small dynamotors, one for low-voltage plate supply for receiving tubes, and one for high-voltage plate supply for transmitting tubes. A 12-volt airplane battery operates the dynamotors and also supplies the filaments. Each dynamotor has two commutators and two sets of windings on its armature, one for the generator and the other for the motor.

In order to eliminate the commutator ripple of a generator, which is caused by sparking at the brushes, a filter system must be used. This consists of a high-voltage condenser connected in parallel to the high-tension d-c. winding of the generator and a choke coil, the latter being inserted, however, directly in series with the $+B$ line which is the positive lead feeding the plates of the tubes. If the ripple is not filtered properly it becomes not only a source of annoyance, owing to the continual humming sound heard in the phones, but it may set up so much noise that the voices might be " drowned out," or made inaudible, and in this event the telephone reception would be poor and unsatisfactory. Just how the choke and condenser are connected in the circuit is shown in Fig. 459.

Reference to the transmitter diagram in Fig. 459 shows that the filaments of the two 5-watt tubes, marked *oscillator* and *doubler*, are in series which permits them to be connected across the battery supply, while all the other filaments, or those in the 50-watt tubes, are in parallel. At a voltage of between 10–14 volts the battery supplies a total filament current of approximately 15 amperes to the transmitting tubes.

Short-Wave Radio Receiver for the Plane.—The radio receiver in Fig. 464 has in all six tubes which are of the Western Electric type. The first three tubes and their associated circuits constitute a *radio-frequency amplifier*, and the fourth tube is a *space charge detector tube*. These tubes are of the four-electrode variety or screen-grid type 245-A. Following the detector we have the fifth tube which is a three-electrode tube type 244-A, which functions as an audio-frequency amplifier. Another tube, a 6-A ballast lamp, is used to keep the filament current constant regardless of normal supply voltage variations. The receiver cathodes and filaments are heated by the plane's 12-volt battery, while the plate voltage is taken from the d-c. output of the dynamotor. Notice in the

schematic diagram of the Western Electric aircraft receiver in Fig. 464 how the filaments of all the tubes are connected in a series arrangement so that each filament will receive its proper terminal voltage when the entire series is placed across the 12-volt battery. The plate potential supplied to this set is 200 to 220 volts.

The diagram shows that there are three tuned radio-frequency circuits; these are adjusted simultaneously to any desired frequency, within certain limits, by a gang construction of the rotor plates of the variable condensers, and they are operated from a remote tuning control unit. The variable condensers are connected across the secondaries of the r.f. transformers, or tuning coil assemblies, which are made to plug into sockets similar to those provided for vacuum tubes. In

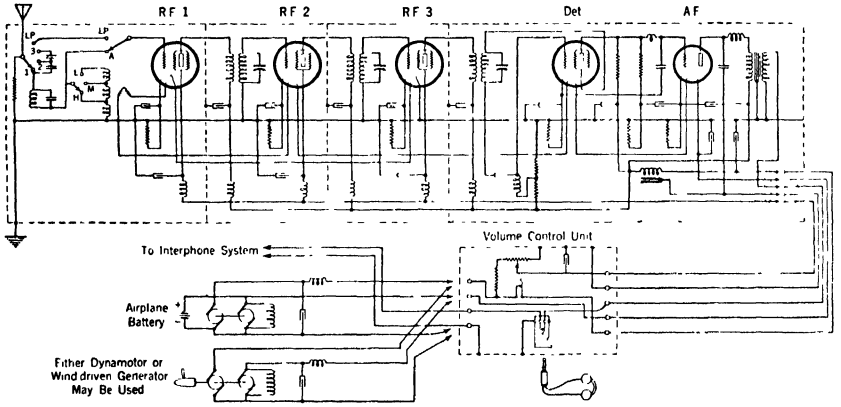

FIG. 464.—Schematic diagram of the Western Electric Model 9-B airplane radio receiver.

this receiver there are three sets of r.f. coils available to cover a frequency band of from 1500 to 6000 kc., or from 200 to 50 meters.

A receiver of this type operates efficiently when used with a vertical or mast type antenna approximately 7 ft. high. An antenna circuit of the untuned or fixed type is employed; it is designed to give some voltage step-up of the signal energy picked up by the antenna and also to reduce the effect of this receiver upon the long-wave receiver when bridged to use the same antenna. Additional selectivity is provided to eliminate interference from high-powered broadcasting stations which are for most of the time " on the air " transmitting at frequencies outside the aircraft band.

It should be understood that a long-wave receiver is used by the pilot to receive the radio range beacon signals and weather forecast which assist him in flying along one of the civil airways, whereas the

short-wave receiver now under discussion is used only to pick up messages sent out by the ground stations of the transport air companies which operate commercial planes.

Again refer to the receiver diagram in Fig. 464 and note how a switch and taps marked " L," " M," and " H " (low, medium and high) are provided in the input circuit to the first tube in order to adjust this circuit according to the particular r.f. coil used, and its coverage of a certain frequency band. This circuit functions similarly to other input circuits in so far as the oscillating signal current sets up a fluctuating voltage which is impressed between the control grid and cathode of the first tube.

Adequate shielding of the circuit elements and the tuning coils is

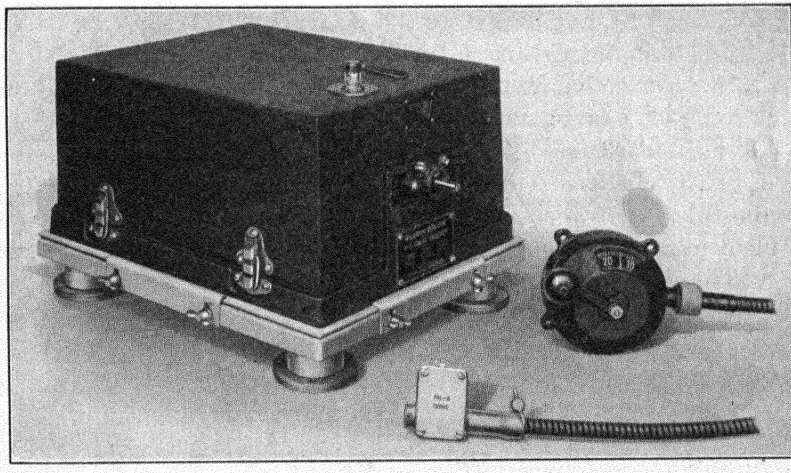

FIG. 465.—The Western Electric Model 9-B airplane receiver and remote tuning control.

provided by mounting the parts in individual copper-shielded containers or cans, the shielding being represented in the diagram by dashed or broken lines. Thorough shielding of the parts is necessary because of the use of screen-grid tubes. The whole receiver assembly is covered with an easily removable aluminum case as shown in Fig. 465. It shows also the remote tuning control which consists of a dial and a length of tubing through which runs a flexible shaft.

The high sensitivity of a receiver of this kind is made possible by the great amplifying properties of the screen-grid tubes used in the r.f. stages. These permit extremely weak signals which may be picked up by the antenna to be boosted sufficiently to give a satisfactory volume of sound in the headphones down to what is known as normal static

level. It is to be understood, of course, that how well voice signals are heard in an airplane by a pilot or observer depends upon the magnitude of all extraneous noises set up by static, ignition, motor, propeller, and so on. A receiver of this kind is so compact and light in construction that it weighs only about 16 lb.

Before ending our description of the aircraft receiver, let us explain about the connections of a space charge detector tube. When a screen grid tube is used as a space charge grid tube its usual connections to the grids are reversed. A glance at the diagram shows that the normal screening grid—the one next to the plate—is used in the detector as the control grid or the one to which the signal voltages are applied; and the other grid—the one closest to the filament—is supplied with a positive voltage. With this change of connection the tube would not function well as an r.f. amplifier since the screening effect is lost and potential variations in the plate circuit could then affect the grid. The advantage of this connection for a detector is to give it a lower plate resistance which results in a large amplification factor.

A brief explanation of the expression " space charge " will now be given. Going back to our study of the action taking place within a vacuum tube, the reader will recall that during normal operation, when the filament or cathode is heated and the plate is furnished with a positive voltage, many of the electrons are attracted by the plate because of its positive potential. Any electrons which strike the plate pass entirely through the plate circuit and constitute a current flow or the tube's plate current; also, there are a few electrons which never get very far from the filament in the first place, and some of these are pulled back by the filament because it naturally attracts electrons since it is the source of the supply; then again, there are a great number of electrons which fill up the space in the tube between filament and plate very much like a cloud or fog; it is these electrons that constitute the *space charge*. Thus, it is easy to understand that the control grid of a detector tube ordinarily occupies a position in a cloud of electrons and, therefore, electrons which reach the plate and constitute the plate current must of necessity first encounter this cloud of electrons or space charge.

Remote Control.—The question arises in aircraft installation of the disposal of the separate units which make it necessary to locate the transmitting and receiving sets wherever possible in the plane. However, the radio controls must be designed in a convenient form for mounting within easy reach of the pilot in a one-man plane, or near the co-pilot in the larger transport planes which carry a pilot and a co-pilot. In the latter case the pilot is usually very busy watching the various instruments to maneuver the plane, especially in foggy and

stormy weather when the radio offers its greatest aid. A good idea of a typical aircraft installation for two-way communication is presented by the illustration in Fig. 452. Some of the components of the transmitter and receiver are mounted in the rear, but all the controls are placed in the pilot's cabin and close by are the dynamotors and storage battery. All units must be carefully cushioned to protect them from plane vibrations during flight or from shocks when making a heavy landing.

The photograph in Fig. 466 gives a view into the cockpit of a large

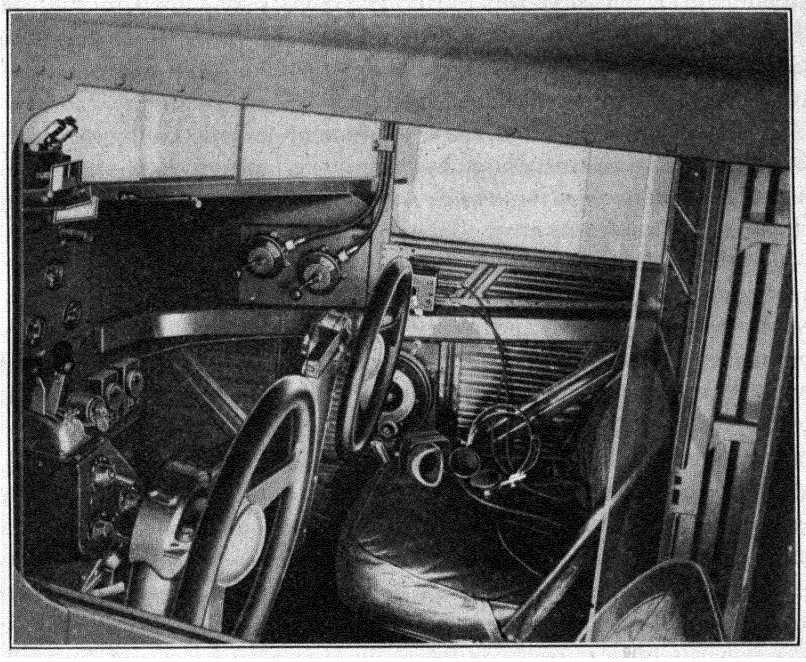

FIG. 466.—A view of the cockpit of a transport plane showing various components of the radio installation. Compare this illustration with the illustration in Fig. 452. *Courtesy Western Electric Company.*

transport plane. A careful comparison should be made between the control units placed in the cockpit in Fig. 452 which are clearly identified and the actual parts themselves appearing in the photograph in Fig. 466. It can be seen that the co-pilot will have charge of the tuning controls and antenna reel. The reel is shown directly in back of the right-hand wheel. Above the reel is a jack box into which are plugged the microphone and telephone headset; the latter two instruments are shown resting on the seat. At the upper left of the wheel are the two remote tuning controls for the tuning of the long-wave and short-wave

receivers, and at the extreme left below the instrument board are the main control switch and the two remote volume control units, one for each receiver. The following paragraphs explain about these controls in more detail.

Each remote tuning control unit is equipped with a luminous dial, and gears operate the flexible shaft at a speed 264 times that of the condenser shaft; this is to reduce the lost motion in this drive to a negligible amount.

The volume of reception, or gain in signal, is controlled by a volume control unit which is a tapered potentiometer as shown in Fig. 464; all of the screen grids connect to its movable arm, thus permitting changes to be made in screen-grid voltage over a given range, and this in turn governs signal amplification.

The main switch of the radio equipment is called a *master control switch*; it is used to turn the power supply on and off to the long-wave and short-wave receivers and transmitter when dynamotors are employed for power supply. This switch functions as follows: In the first position, marked "Off," obviously the circuits are inactive. In the second position, marked "R," which is normal in flight, the storage battery is connected to the receiving tube filaments and, besides, the dynamotor used to supply plate voltage to these tubes and the heater circuit of the quartz-crystal chamber of the radio transmitter are energized. The dynamotor for this receiver operates on an input of 3 to 3.8 amperes at 12 volts with an output of 0.05 ampere (50 milliamperes) at 200 to 220 volts. In the third position, "T–R," the action in the second position is repeated; also, all power circuits are then ready for sending or receiving since the filaments of the radio transmitter tubes are energized and the dynamotor furnishing the plate supply to the transmitter tubes is started.

When the pilot is ready to transmit, it is only necessary for him to start oscillations in the radio transmitter by merely pressing a push-button or key located in some convenient position; the button actuates relays which perform all necessary switching functions. With the key open there is no radiation from the transmitter. Thus, during a conversation between a pilot and the operator in the ground station the push-button is pressed while the pilot talks and released while he listens. The "talk" and "listen" button is made in three types: one for mounting on the end of the "stick," another for mounting on a flat surface, and still another which is incorporated with the microphone; the last type is the one illustrated in Fig. 466.

A complete telephone set consists of a microphone, telephone receivers, cord and plug. Sets of this kind are made up for use with a helmet

to be worn by the pilots of one-man planes. To enable the pilot to use both hands in the operation of the plane the microphone is mounted on a swivel, and when not in use it can be swung over the pilot's head or under his chin. When there are a pilot and co-pilot, either one of two headsets may be used with the *silencer* type telephone transmitter or microphone. It is possible to shut out a considerable amount of interference set up especially by noisy airplane motors by careful design of the flying helmet. This will insure that the pilot's speech will be understood when reproduced by the ground station receiver and that the pilot will hear the messages sent to him. One type of microphone like the one in the photograph in Fig. 466 is equipped with a soft rubber mouthpiece which is held tightly to the lips, and the microphone itself is especially made so that its diaphragm will readily respond or vibrate when voice air waves strike it directly, but outside propeller noises will have practically no effect on it. Also, in this photograph are shown telephone receivers which are of the watchcase type with a headband, but it should be mentioned that a special headset is made for aviation purposes. The latter headset consists of small molded earpieces known as phonettes, which weigh less than an ounce and which fit snugly into the ears.

Radio Transmitter for the Ground Station.—To carry on two-way communication the ground station is equipped essentially with a radio transmitter, a radio receiver, power supply equipment, microphone and telephone headset, and the usual provisions for regulating volume, and switches for controlling the power supplied to the various circuits. An examination of the schematic circuit of the Western Electric transmitter and rectifier in Fig. 467 shows that with the exception of a power amplifier the circuits of the transmitter proper are in many respects similar to those in the aircraft transmitter which have already been described.

Of course, in the ground transmitter a power amplifier increases the transmitting range. And, in addition, a rectifier and a suitable filter system are required in order to rectify the alternating current supplied from outside mains and to smooth the rectified a.c. into a practically non-fluctuating direct current for energizing the plates of the tubes. In this transmitter the filaments are supplied with a.c. of the proper voltage from a step-down transformer, marked " FT." The following is an explanation of the special features involved in the ground transmitter.

An interior view of the ground transmitter is given in Fig. 468. This transmitter consists essentially of a temperature-controlled quartz crystal oscillator, a frequency doubler, a modulating amplifier, an

audio-frequency amplifier, and a power amplifier, the power amplifier having been added to increase the output power supply to the antenna. The vacuum tubes used in this transmitter are all of the Western Electric type.

There are two crystal control units mounted in the transmitter frame which are provided with a flexible lead and clip connector so arranged that the operator can quickly switch from one unit to the other. The particular crystal unit that he selects depends, of course, upon the frequency to be used in transmitting. As long as the main switch in the rectifier is closed the heater elements which keep the crystals at a certain

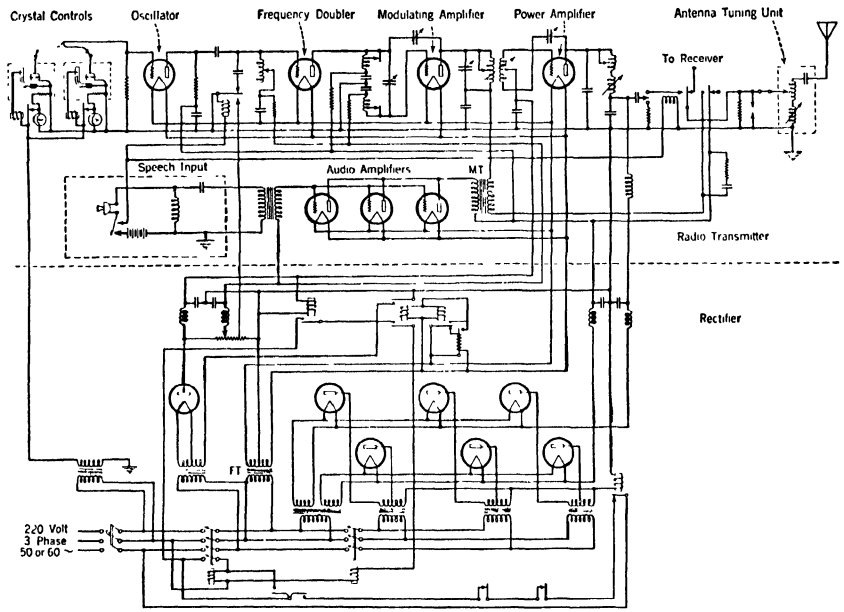

FIG. 467.—A schematic diagram of the Western Electric 400-watt transmitter for installation at ground stations.

temperature are energized; hence, during operation, both crystals are always in readiness to be connected into the transmitter circuit.

The oscillator uses a 5-watt vacuum tube, controlled in the grid circuit by a quartz crystal similar to that used in the airplane transmitter. The quartz crystal is operated at half the desired frequency and a second 5-watt vacuum tube with a high negative grid bias is used to produce harmonics, the second harmonic being selected in the plate circuit of this tube and then impressed on the grid of a 50-watt modulating amplifier tube. The circuit arrangement of the audio-frequency

amplifier portion of the transmitter requires three 50-watt tubes connected in parallel. The audio output of these tubes feeds through a transformer, marked "MT" in the diagram in Fig. 467, and causes fluctuating voltage to be induced in the plate circuit of the modulating amplifier and the plate current undergoes a variation in amplitude similar to the voice waves impressed on the microphone connected to the speech input circuit. The large tube in the center of the photograph, Fig. 468, is the radio-frequency power amplifier which operates with a plate potential of 2500 volts. The modulated carrier frequency is transferred from the output of this tube to the antenna through a feed line and condenser; this type of coupling effectively suppresses harmonics.

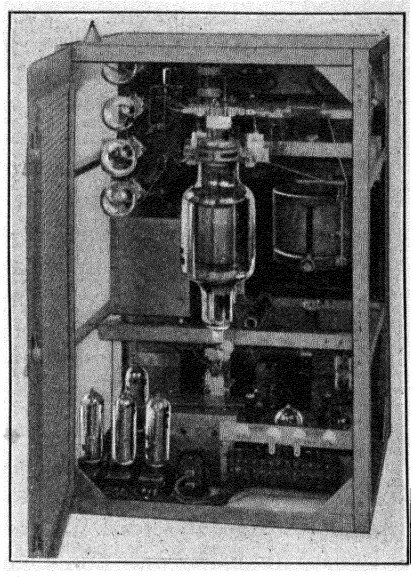

FIG. 468.—An interior view of the Western Electric 400-watt ground transmitter.

The output of the rectifier supplies a high potential of 2500 volts direct current for the power amplifier plate, a low potential of 1000 volts direct current for plate supply to other tubes, and grid bias potentials of -55 and -200 volts. On the front panel are three meters for measuring these potentials. Also, 10-volt alternating current is supplied for filaments. The power rating of this transmitter is 400 watts.

For reception at the ground station a short-wave receiver identical with the one in the airplane is used; it employs a similar volume control, but the tuning dial is mounted on the front of the panel. A desk stand microphone very similar to the standard telephone instrument is used for picking up the voice of the station's operator.

To summarize the latter part of this chapter, it can be said that any system which permits two-way communication is obviously a distinct advantage because the pilot of a plane and the personnel in ground stations may remain, under average conditions, in contact by means of radio.

*

CHAPTER XXVII

RADIO BROADCAST TRANSMITTER EQUIPMENT

Foreword.—The theory of broadcasting has been treated in detail in previous sections of this text, but in order that actual installations may be known, specific types are treated in this chapter.

Type 1-B 1-kw. Broadcast Transmitter.—The RCA 1-B broadcast transmitter has a nominal output rating of 1 kilowatt. It is well to observe, here, that in accordance with conventional form, when specifying this rating, no account is taken of the degree of modulation. This rating of 1 kilowatt is the measure of the unmodulated carrier wave only. When modulated 100 per cent, however, the instantaneous peak output reaches 4 kilowatts. Tube capacity and circuit design are provided to permit continous operation at full 100 per cent modulation.

Frequency Range.—This equipment can be adjusted for maximum performance and efficiency on any frequency within the broadcast band ranging from 1500 to 550 kilocycles. Crystals are supplied for one assigned frequency only and a change of frequency necessitates a change of crystals.

Power Supply.—This particular type of transmitter is designed for 220-volt, 3-phase, 3-wire, 50- or 60-cycle power supply. It may be designed also to operate from a 230-volt 2-wire d-c. supply. With regard to power supply regulation, the set should be operated from a well-regulated power line. A supply in which the line voltage variations exceed plus or minus 5 per cent is considered unsuitable for broadcast transmitter supply service, and requires some form of automatic regulating equipment.

Vacuum Tubes Used.—The tubes for this transmitter consist of the following types and quantities:

Quantity	Type	Quantity	Type
4	UX-210	1	UV-203A
4	UX-865	1	UV-849
3	UX-860	2	UX-280
2	UX-866	1	UV-207

Note: See Appendix for data on the types of tubes here listed.

The position of these various types of vacuum tubes in the general scheme of the transmitter is as shown in the block diagram in Fig. 469.

Type of Circuit.—Refer to the circuit diagram in Fig. 470 for a schematic representation of circuits.

The carrier frequency is generated by a crystal-controlled master oscillator, amplified by five successive stages of radio-frequency power amplification, and delivered to the antenna through a transmission line. Audio frequency, i.e., the modulating frequency, passes through one stage of power amplification to the modulating circuit. Modulation

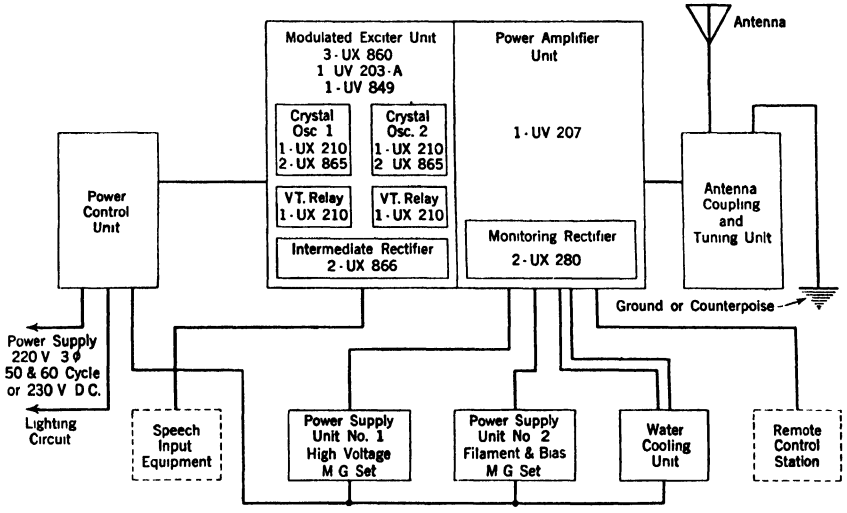

FIG. 469.—Block diagram showing component units of the RCA Model 1-B 1-kw. broadcast transmitter.

takes place in the fourth radio-frequency stage. The succeeding radio-frequency power amplifier acts as a linear amplifier. Such a system of modulating is, by convention, called *low level modulation.*

The power supply for operating the radio system is primarily a fully automatic and interlocked system, but provision is made for interrupting the sequence of starting for test or adjustment purposes at several points. Some of the features of the control system are a water-pressure actuated device, temperature indicators, visual control indicators, overload protection with both manual and remote electrical re-set, filament and bias undervoltage interlocks, water under-pressure and excessive temperature interlocks together with proper sequential starting and stopping of cooling water, filament, bias and plate voltage.

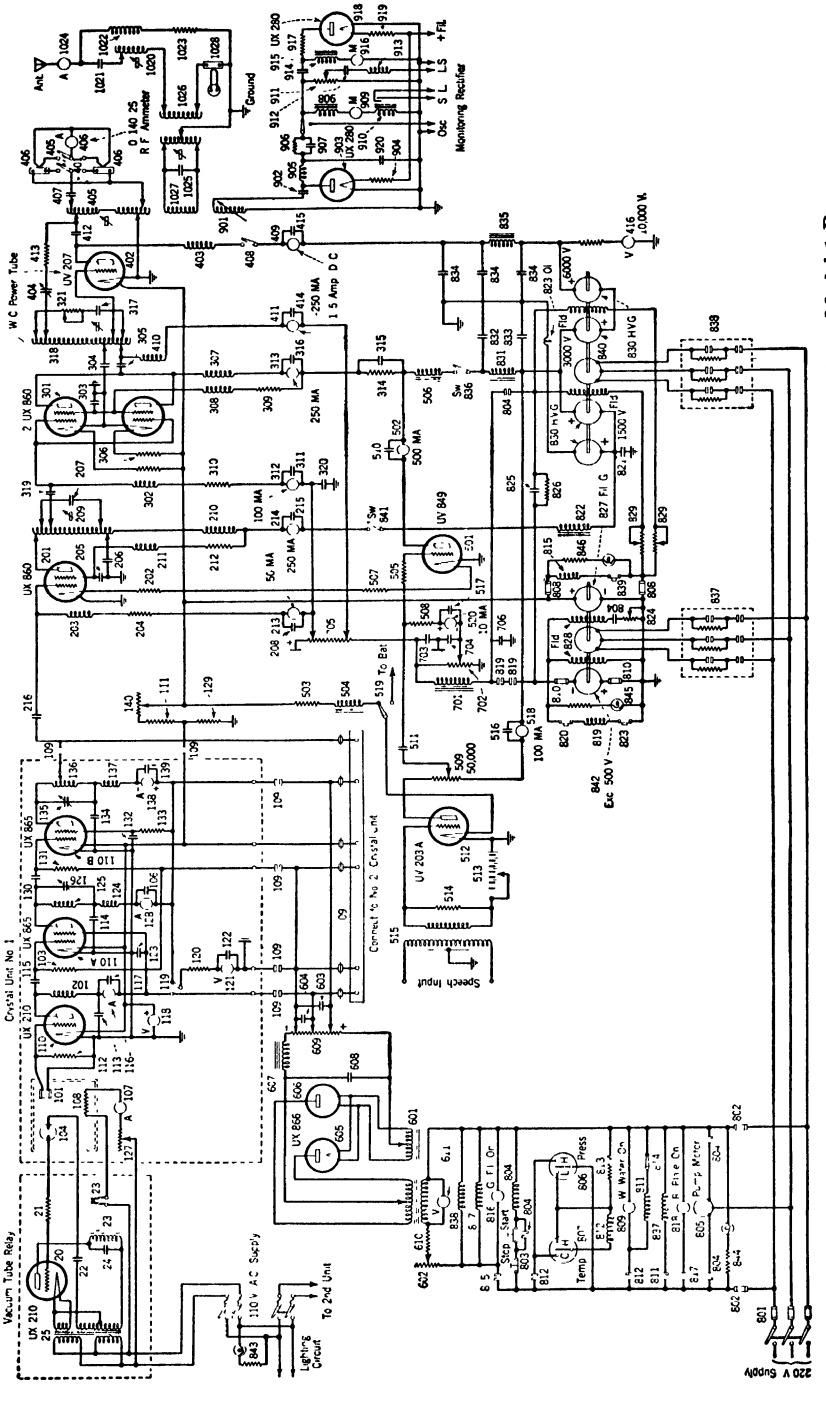

Fig. 470.—Schematic diagram of the circuits in the RCA 1-kw. broadcast transmitter Model 1-B.

The various parts in Fig. 470 are identified as follows:

Schematic Number	Name	Quantity
	VACUUM TUBE RELAY (Two Required)	
20	Tube Socket (UX-210)	1
21	Grid Resistor	1
22	Grid Coupling Condenser	1
23	Relay	1
24	Plate By-pass Condenser	2
25	Transformer	1
	CRYSTAL UNIT (Two Required)	
101	Crystal Holder	1
102	Oscillator Plate Choke Coil	1
103	First Buffer Amplifier Grid Resistor	1
104	Metastatic Thermo-regulator	1
106	Ammeter By-pass Condenser	1
107	Heater Ammeter	1
108	Crystal Heater Coil	1
109	Crystal Unit Change-over Switch	1
110 110-A 110-B	Tube Socket and Tube	3
111	Filament Resistor	1
112	Crystal Oscillator Grid Leak	1
113	Plate By-pass Condenser (Crystal Oscillator)	1
114	First Buffer Plate By-pass Condenser	1
115	Coupling Condenser	1
116	Crystal Oscillator Plate Ammeter	1
117	By-pass Condenser	1
118	Filament Voltmeter	1
119	Voltmeter Change-over Switch	1
120 121	Plate Voltmeter and Multiplier	1
122	Voltmeter By-pass Condenser	1
123	Radio-frequency Screen-grid to Ground By-pass Condenser	1
124	First Buffer Plate Choke Coil	1
125	First Buffer Tank Coil	1
126	Tank Condenser	1
127	Series Heater Resistor	1
128	First Buffer Plate Ammeter	1
129	Filament Resistor	1
130	Coupling Condenser (Grid)	1
131	Grid Resistor Second Buffer Amplifier	1
132	Screen Grid By-pass Condenser, Second Buffer	1
133	Screen Grid Resistor, Second Buffer	1
134	Second Buffer Plate By-pass Condenser	1
135	Second Buffer Tank Condenser	1
136	Second Buffer Tank Inductance	1
137	Plate Choke Coil Second Buffer	1

Schematic Number	Name CRYSTAL UNIT (Two Required)—*Continued*	Quantity
138	Plate Ammeter Second Buffer	1
139	Plate Ammeter By-pass Condenser	1
140	Filament Rheostat	1
	UX-860 BUFFER AMPLIFIER	
201	860 Buffer Amplifier Tube Socket and Tube	1
202	Filament Resistor	1
203	Grid Choke Coil	1
204	Grid Resistor	1
205	Screen Grid By-pass Condenser	1
206	Plate By-pass Condenser	1
207	Tank Condenser	2
208	Grid Meter By-pass Condenser	1
209	Tank Coil	1
210	Plate Choke Coil	1
211	Screen Grid Choke	1
212	Screen Grid Series Resistor	4
213	Grid Ammeter	1
214	Plate Ammeter	1
215	Plate Ammeter By-pass Condenser	1
216	Grid Coupling Condenser	1
	MODULATED AMPLIFIER	
301	860 Tube Sockets and Tubes	2
302	Grid Choke Coil	1
303	Screen Grid By-pass Condenser	1
304	Radio-frequency By-pass Condenser	1
305	Plate Blocking Condenser	1
306	Filament Resistors	2
307	Plate Choke Coil	1
308	Screen Grid Choke Coil	1
309	Screen Grid Resistor	5
310	Grid Resistor	1
311	Grid Ammeter By-pass Condenser	1
312	Grid Ammeter	1
313	Plate Ammeter	1
314	Plate Series Resistors	6
315	Audio Coupling Condenser	1
316	Plate Ammeter By-pass Condenser	1
317	Tank Condensers	2
318	Tank Inductance Coil	1
319	Grid Coupling Condenser	1
320	Grid By-pass Filter	1
321	Load Resistor	1

Schematic Number	Name	Quantity
	POWER AMPLIFIER	
401	Thermocouple Change-over Switch	1
402	Water-cooled Tube Jacket and Tube	1
403	Plate Choke Coil	1
404	Neutralizing Condenser	1
405	Tank Inductance Coil	1
406	Radio-frequency Ammeter (Tank)	1
	20-Ampere External Thermocouple	1
	2-Ampere External Thermocouple	1
407	Tank Condensers	3
408	6000-Volt Plate Circuit Switch	1
409	Plate Ammeter	1
410	Grid Choke Coil	1
411	Grid Ammeter	1
412	Plate Blocking Condenser	1
413	Power Factor Correcting Resistor	1
414	Grid Ammeter By-pass Condenser	1
415	Plate Ammeter By-pass Condenser	1
416	High-voltage Voltmeter with External Resistors	1
	AUDIO SYSTEM	
501	849 Tube Socket (Two Parts) and Tubes	1
502	849 Plate Ammeter	1
503	203-A Series Filament Resistor	1
504	203-A Filament Filter Choke	1
505	849 Grid Resistor	1
506	Heising Choke	1
507	849 Filament Resistor	1
508	849 Grid Resistors	3
509	203-A Series Plate Resistors	5
510	849 Plate Ammeter By-pass Condenser	1
511	Coupling Condensers	2
512	203-A Tube Socket and Tube	1
513	203-A Bias Battery	5
514	203-A Grid Resistor	6
515	Speech Input Transformer	1
516	203-A Plate Ammeter By-pass Condenser	1
517	849 Grid Ammeter By-pass Condenser	1
518	203-A Plate Ammeter	1
519	203-A Filament Change-over Switch	1
520	849 Grid Ammeter	1

Schematic Number	Name CRYSTAL UNIT RECTIFIER	Quantity
601	Plate Transformer	1
602	Transformer—Primary Rheostat	1
603	Filter Condenser	1
604	Filter Condenser	1
605	866 Tube Socket and Tube	1
606	866 Tube Socket	1
607	Filter Reactor	1
608	Filter Condenser	1
609	Potentiometer	2
610	Transformer—Primary Resistor	1
611	Voltmeter—Rectifier Filament	1
	BIAS POTENTIOMETER AND SUPPLY	
701	Filter Reactor	1
702	Modulator Bias Potentiometer	1
703	Filter Condenser	1
704	Filter Condenser	1
705	Bias Potentiometer	3
706	Filter Condenser	1
	POWER SUPPLY AND CONTROL SYSTEM	
801	Main Supply Fuses	3
802	Fuses—Control System	2
803	Push Button Station	1
804	Master Contactor:	
	Contactor	1
	Coil	2
	Contactor	1
805	Water Pump Motor	1
806	Water Pressure Gauge and Interlock	1
807	Water Temperature Interlock—Thermostat	1
808	Fuses	2
809	Water Pressure Indicator Light	
	Receptacle	1
	Lamp	1
	Lens	1
810	Fuses	2
811	Filament—Motor-Generator Contactor	1
	Coil	1
812	Water Interlock Relay	1
	Coil	1
813	Series Resistor Water Interlock Relay	1
814	Filament Switch	1
815	Filament Motor Generator Interlock Relay	1
	Coil	2

Schematic Number	Name POWER SUPPLY AND CONTROL SYSTEM—*Continued*	Quantity
816	Filament Indicator Light Receptacle	1
	Lamp	1
	Lens	1
817	Bias Voltage Relay	1
	Coil	1
818	Plate Voltage Indicating Lamp	1
	Receptacle	1
	Lens	1
819	Bias Interlock Relay	1
	Coils	2
820	Plate Control Switch	1
821	Filter Condenser, 1500 Volts	1
822	1500-Volt Filter Reactor	1
823	Overload Relay	1
824	Filament Field Rheostat	1
825	Condenser } Spark Absorber	1
826	Resistor } Spark Absorber	1
827	Filament—Generator Direct Current	1
828	Filament Motor-Generator Driving Motor	1
829	High-Voltage Field Rheostat	2
830	High-Voltage Generators	2
831	3000-Volt Filter Reactor	1
832	3000-Volt Filter Condenser	1
833	3000-Volt Filter Condenser	1
834	High-Voltage Filter Condensers	3
835	High-Voltage Filter Reactor	1
836	3000-Volt Plate Switch	1
837	Filament Motor-Generator Magnetic Line Starter	1
838	Plate Motor-Generator Magnetic Line Starter	1
839	Door Interlocks (not shown in diagram)	5
840	Plate Motor-Generator Driving Motor	1
841	1500-Volt Plate Switch	1
842	500-Volt Exciter and Bias Generator	1
843	110-Volt Indicator Lamp	1
	Receptacle	1
	Lens	1
844	220-Volt Indicator Lamp	1
	Receptacle	1
	Lens	1
845	500-Volt Indicator Lamp	1
	Receptacle	1
	Lens	1
	Resistor	1
846	22-Volt Indicator Lamp	1
	Receptacle	1
	Lens	1

Schematic Number	Name MONITORING RECTIFIER	Quantity
901	Coupling Coil. .	1
902	Plate Blocking Condenser.	1
903	280 Tube Socket. . .	1
904	Series Filament Resistor	1
905	Radio-frequency Choke Coil	1
906	Resistor.	1
907	Condenser. . . .	3
908	Audio Choke Coil. . .	1
909	Adjusting Meter.	1
910	Signal Light Relay.	1
911	Audio Volume Control Potentiometer.	1
912	Filter Condenser. . .	1
913	Filter Choke.	1
914	Coupling Condenser. . .	1
915	Audio Choke Coil.	1
916	Modulation Meter.	1
917	Plate Resistor .	1
918	280 Tube Socket.	1
919	Series Filament Resistor	1
920	By-pass Condenser	1
	ANTENNA COUPLING AND TUNING UNIT	
1020	Loading Coil	1
1021	Series Condenser. .	1
1022	Drain Choke Coil . . .	1
1023	Drain Resistor.	2
1024	Antenna Ammeter . .	1
1025	Tank Condensers. . . .	2
1026	Transmission Line Tank and Coupling Coil . .	1
1027	Transmission Line Coupling Coil	1
1028	Antenna Ammeter—Thermocouple . .	1

Frequency Control.—Means are provided for maintaining the mean carrier frequency of the transmitter to within plus or minus 50 cycles of the assigned value.

There are two separate duplicate crystal-controlled master oscillators, each associated with two screen-grid buffer amplifiers. These are built into compact units with essential meters and controls in view and are accessible from the front of the transmitter panel. In order to insure permanent and reliable adjustment, the internal parts of the units are completely enclosed in metal shields. The tubes can be readily removed for replacement purposes by withdrawing the units from the front panel. These two units are capable of instantaneous

switching from the front panel of the transmitter so that either can be used at a moment's notice.

Method of Power Control.—In the case of 50- and 60-cycle a-c. power supply, primary power is derived from a 220-volt, 3-phase source. This supply operates all control circuits, all rotating equipment including pump, filament motor-generator and plate motor-generator driving motors, and crystal oscillator supply rectifier. A 110-volt single phase lighting circuit supplies the crystal heater power. In the case of d-c. power supply, the 230-volt d-c. power line supplies all control circuits and all rotating equipment including pump, filament and plate motor-generator driving motors. Slip rings on the driving motor of the filament motor-generator set provide 160 volts a-c. single phase for operating the crystal oscillator plate rectifier supply. A 115-volt d-c. lighting circuit, or a 110-volt a-c. lighting circuit supplies crystal heater power. In either case an optional battery filament supply to the speech amplifier tube is provided.

Protective Devices.—The various devices used for safety of the operating personnel and protection of the apparatus include the following:

Water-pressure gauge and interlock, which prevent damage because of water failure.

Water temperature or thermostatic cutout which protects against excessive operating temperature.

Filament undervoltage relay.

Bias undervoltage relay.

Overload circuit breaker with manual and electrical re-set.

Sequency interlocks which protect each successive operation in either starting or stopping.

Thermal overload relays in each motor-generator driving motor circuit.

Fuses in main and all branch circuits.

Disconnect switches in various plate supply leads.

Automatic high voltage disconnect and neutralizing changeover switch.

Switches on all doors which remove bias and plate voltages, thus protecting operating personnel from accidental contact with dangerous voltages.

Visual indicators as a guide to all important circuit conditions.

Sequence interrupting switches which provide manual control of successive stages of operation for test and adjustment purposes.

Antenna Coupling.—Fig. 471 shows a rear view of the antenna coupling and tuning unit, the parts of which are identified as follows:

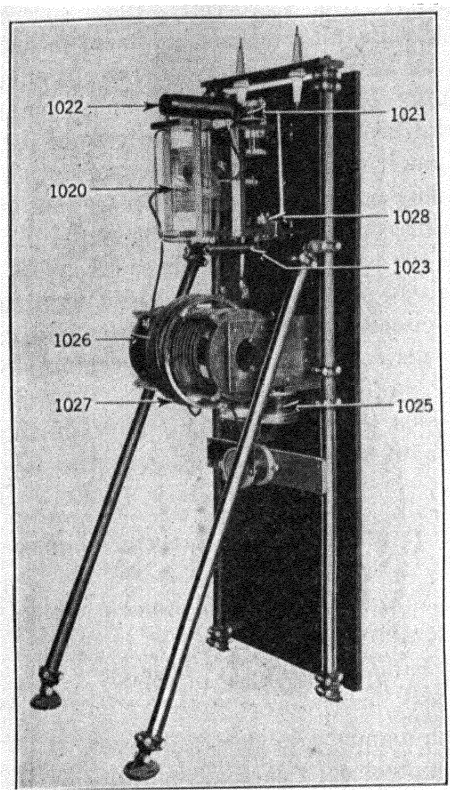

FIG. 471.—Side view of the antenna coupling and tuning unit for the Model 1-B 1-kw. broadcast transmitter.

Part Number	Name
1020	Loading Coil
1021	Series Condenser
1022	Drain Choke Coil
1023	Drain Resistor
1025	Tank Condensers
1026	Transmission Line Tank and Coupling Coil
1027	Transmission Line Coupling Coil
1028	Antenna Ammeter—Thermocouple

The panel wiring diagram of the antenna coupling and tuning unit is shown in Fig. 472.

A two-wire transmission line is used for coupling the antenna to the power amplifier. This provides an efficient coupling between the transmitter output stage and antenna when the antenna is remotely located. Remote control is quite desirable for many reasons. When properly terminated and adjusted radiation from a transmission line is negligible and the efficiency of transfer is very high. In addition, through proper design, radio-frequency harmonic suppression is accomplished.

Audio-Frequency Characteristics.—The audio-frequency response curve, from audio input terminals to speech amplifier through the transmitter and into the antenna, as measured by rectified antenna current methods, is substantially flat. By substantially flat, is meant that this frequency response curve will not vary more than plus or minus 2 TU (transmission units) from a straight line between 30 and 10,000 cycles, or more than plus or minus 1 TU, between 100 and 5000 cycles.

Modulation.—This type transmitter employs what is known as "low level" modulation. This is in contrast with the "high level" system used in older types of equipment in which the audio-frequency power was amplified sufficiently in magnitude to modulate the output r.f. amplifier by the *constant current* method.

In a low level modulation system, the audio circuits are simple, and with respect to maintenance and tube costs, quite economical compared to "high level" modulation. By this "low level" system, the radio system is modulated in one of the low power stages where 100 per cent modulation can be obtained without objectionable power loss.

A 100 per cent modulation system has a great many advantages over the older type in which only 30 to 50 per cent modulation was obtained, by reason of the fact that the peak output in the former case reaches 400 per cent of normal carrier output, whereas the peak output for 50 per cent modulation, as in the latter case, would be but 225 per cent or less of carrier output.

Thus, the average output from a 100 per cent modulated transmitter is considerably greater than the average output of transmitters operating at lower percentages of modulation. Naturally, this increased output of power into the antenna gives a greater range of usefulness to the station, greater area of coverage, and a greater ratio of signal to interference level.

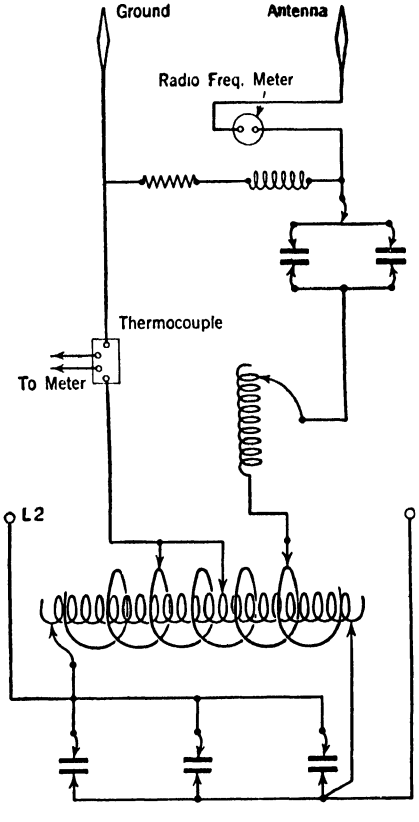

FIG. 472.—Panel wiring diagram for antenna coupling and tuning unit of the type 1-B broadcast transmitter.

Filament-Plate Power Supply.—Power for filament and plate circuits is derived from two motor-generator units, one of which provides filament and bias supply to all stages; the other, a high-voltage motor-generator set, consists of two duplicate double commutator 3000-volt generators, each insulated for 6000 volts, connected in series. This

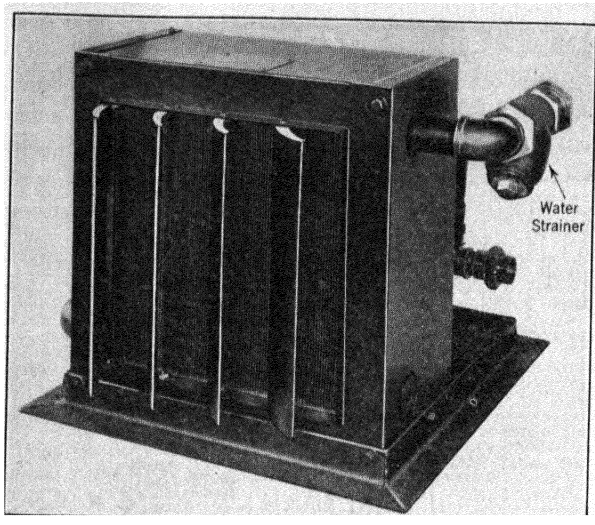

FIG. 473.—Front view of the water-cooling unit used with the 1-kw. broadcast transmitter.

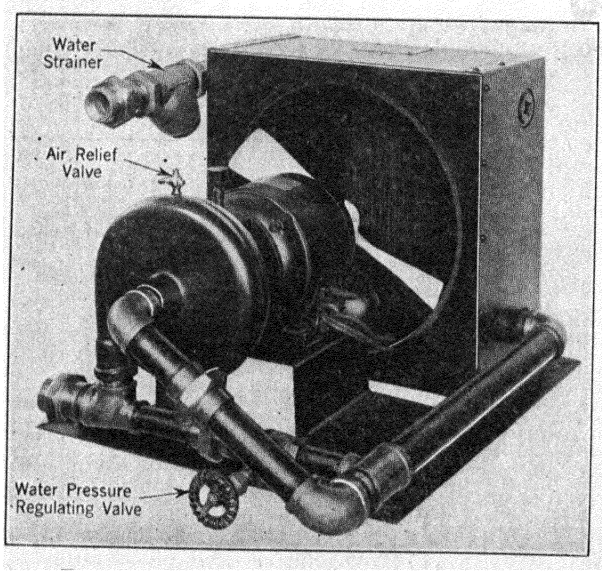

FIG. 474.—Rear view of the water-cooling unit.

last unit supplies plate and screen-grid potentials at a voltage up to 6000 volts. A 500-volt exciter machine, furnished as a part of the filament motor-generator set, provides field excitation for all machines as well as bias voltage for all stages except speech amplifier and crystal oscillator units. Each of these machines is specially designed and constructed to reduce commutator ripple to a minimum, and each output circuit is provided with an adequate filter circuit. For this type of transmitter where only moderately high voltages are employed, and when reliable low maintenance cost of power supply is required, the motor-generator set is the most suitable from an operative point of view when flexibility of voltage control and various values of voltage are required for different amplifier stages. These various voltages are obtained directly from the machine without excessive potentiometer power loss which would be the case were high voltage rectifiers to be used, and where the regulation of the power source must be considered.

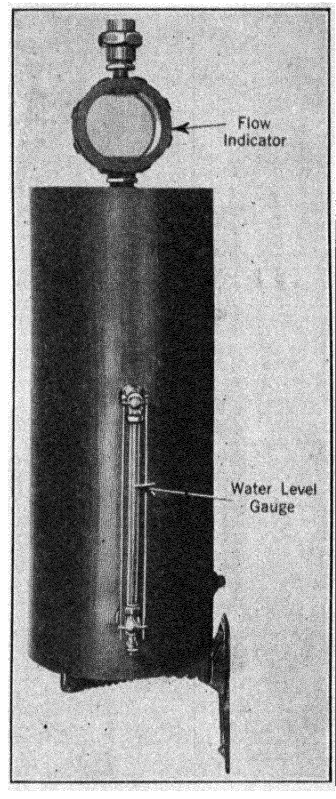

FIG. 475.—The expansion tank into which the water partly drains when not being circulated through the tube jacket.

Cooling System.—The power amplifier tube requires water cooling. Approximately 10 gallons per minute are circulated through the system, propelled by a centrifugal water pump, motor driven and equipped with a pressure regulator in the form of a by-pass valve. This water is cooled by being circulated through a highly efficient copper radiator fitted with copper cooling fins through which air is blown by means of a fan affixed to the same motor shaft which drives the pump. Front and rear views of the water cooling unit are shown in Figs. 473 and 474.

When not being circulated, the water partly drains into a 15-gallon expansion tank (see Fig. 475) which reduces the level of the water in the tube jacket, thus allowing the tube to be changed easily. A visual water flow indicator is provided, the return water being forced through a jet visible through glass windows in the indicator. The top of this tank is vented to relieve trapped air which

collects in any circulating hot water system, and which is a constant source of danger to tube jackets if not relieved, since a bubble of trapped air circulating past the jacket may effectively cause localized heating with consequent tube damage. The dissipation rating of this cooling system is 4 kilowatts continuously. This unit is designed with a large factor of safety and will effectively cool the transmitter even though the set be operated in the most unfavorable climatic

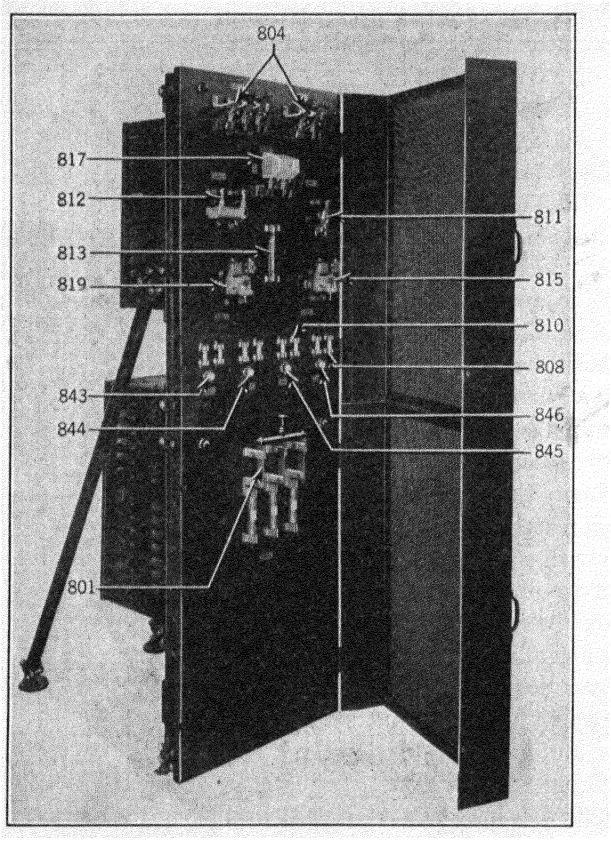

FIG. 476.—Front view of the power-control panel of the RCA 1-kw. broadcast transmitter.

conditions, provided that the vacuum tube cooling unit is installed where it can obtain a good air supply.

Component Units.—By reference to the block diagram, Fig. 469, it can be seen that the complete transmitter consists of seven component parts as listed at the top of the following page:

(*a*) Power control unit. Type 1-B.
(*b*) Exciter-modulator unit.
(*c*) Broadcast amplifier. Type A-1-B.
(*d*) Water cooling unit.
(*e*) Antenna coupling and tuning unit.
(*f*) High voltage motor-generator set.
(*g*) Filament and bias motor-generator set.

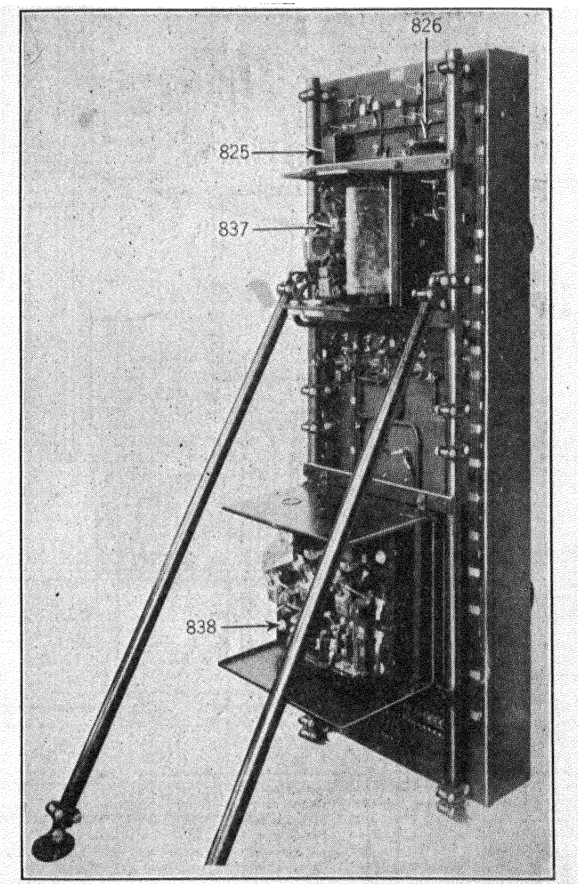

FIG. 477.—Rear view of the RCA 1-kw. broadcast transmitter d-c. power-control unit.

These units will be considered separately and in detail in the following paragraphs.

Power Control Unit.—This panel contains all of the relays and contactors used in the automatic interlocked starting system, together

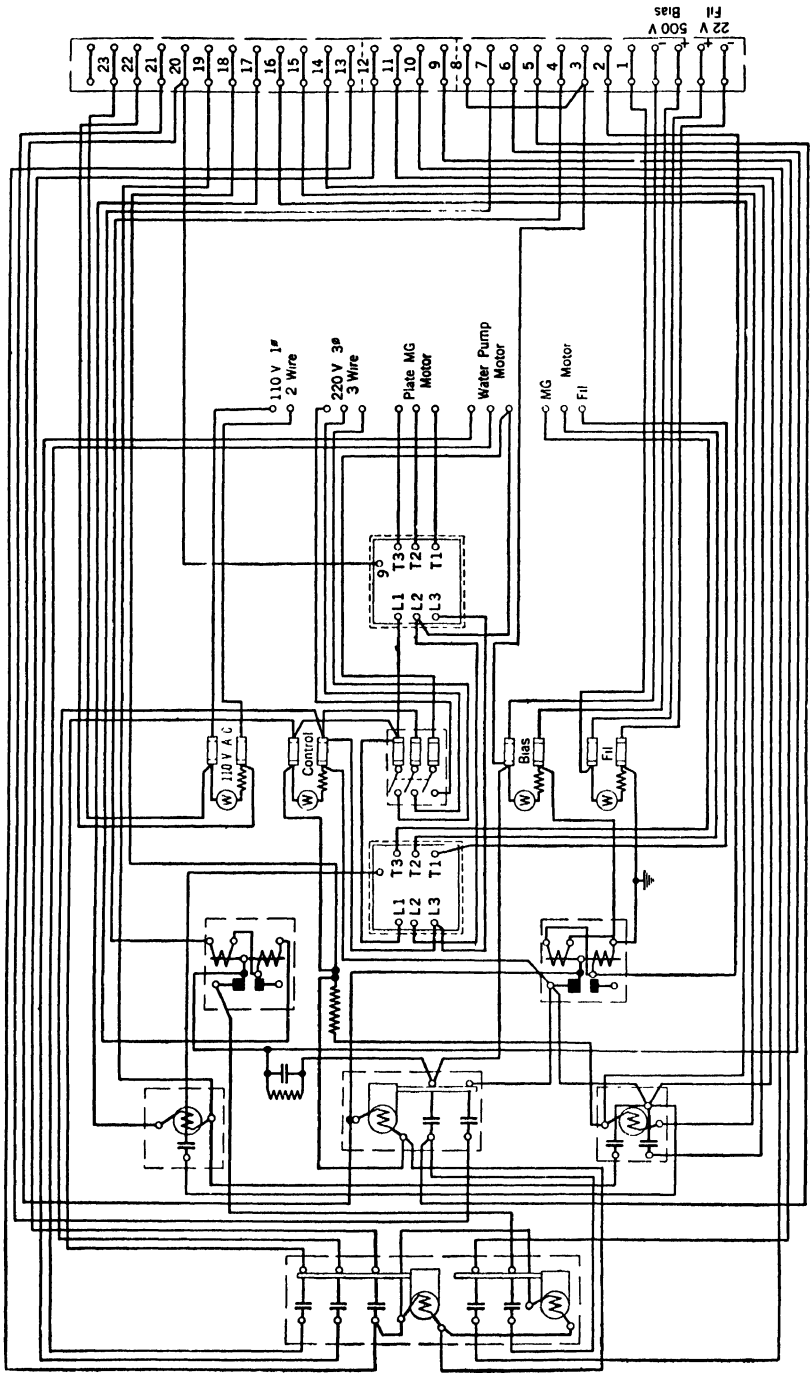

FIG. 478.—Connection wiring diagram for the a-c. power-control panel of the RCA 1-kw. broadcast transmitter.

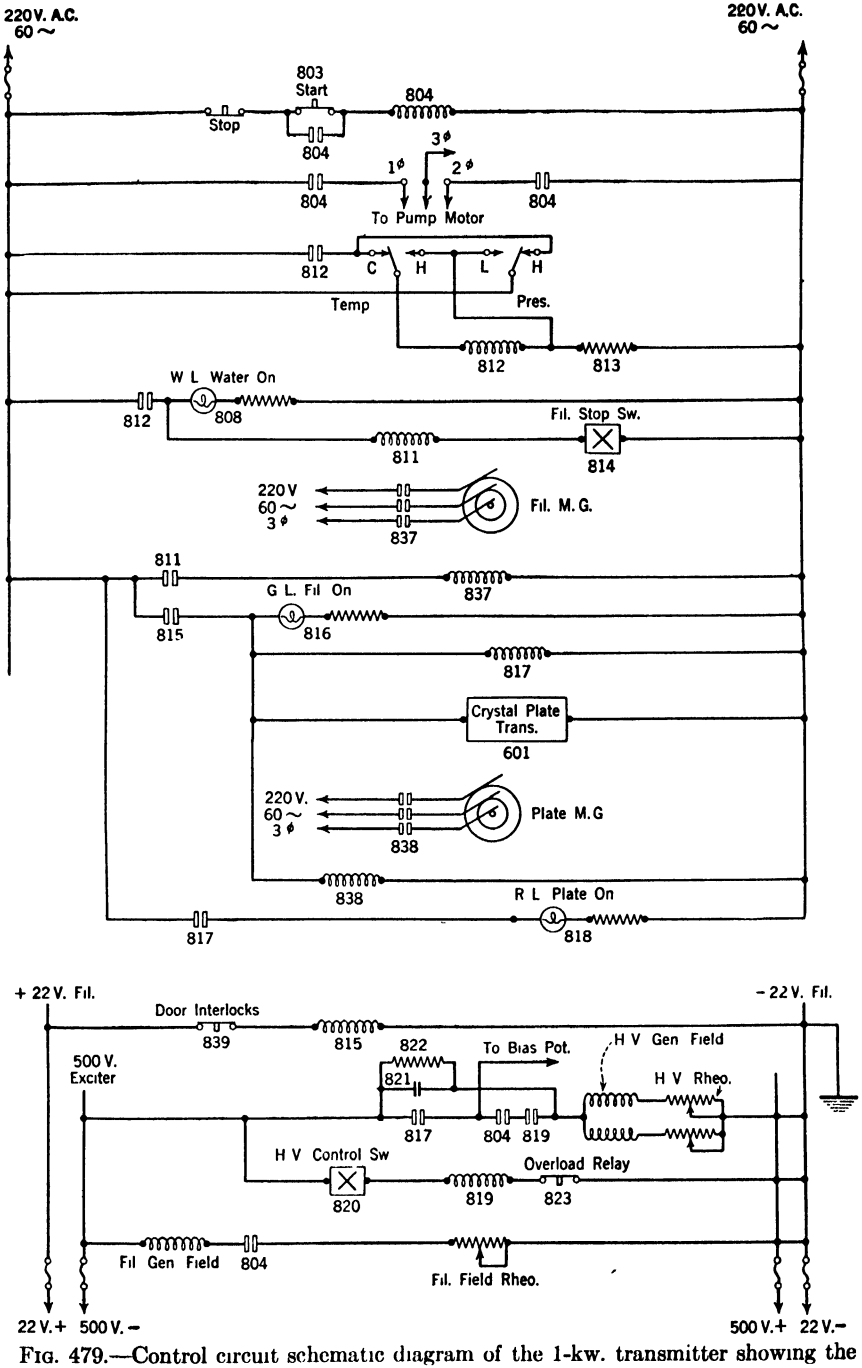

FIG. 479.—Control circuit schematic diagram of the 1-kw. transmitter showing the a-c. power supply.

with the magnetic resistance motor-generator starting boxes. In addition, this panel serves as a distributing frame, the terminal and wire numbers originating at its terminal board. Power leads are brought to this panel and distributed therefrom to the various motor circuits and other radio panels.

Figs. 476 and 477 show front and rear views of the power control unit. All numbered parts are identified in the listing on pages 914 and 915.

A wiring diagram of the power control panel as seen from the rear

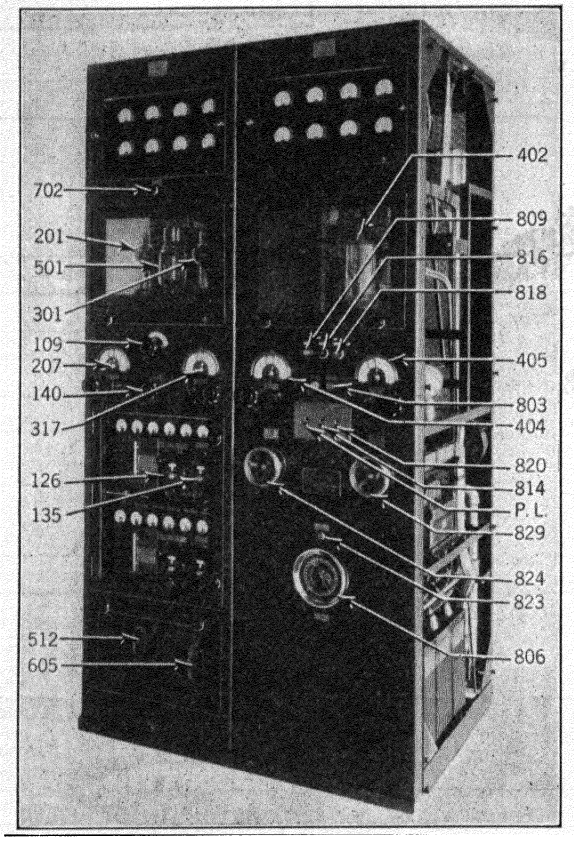

FIG. 480.—Front view of the RCA 1-kw. broadcast transmitter power amplifier and exciter modulator unit.

of the unit is given in Fig. 478. All parts are shown in approximately correct location in the assembly.

The function of the various parts may more easily be understood by reference to the schematic diagram in Fig. 479, the numbered units of

which are listed on pages 914 and 915. As may be seen, all circuits are fused, and indicating lights are provided to indicate at all times the condition of each circuit. These lights are connected on the load side of the fuses and will go out if either or both fuses open up, or if the line circuit is open. Those on the filament and bias generator circuits also indicate undervoltage on either machine or any trouble with the circuits which

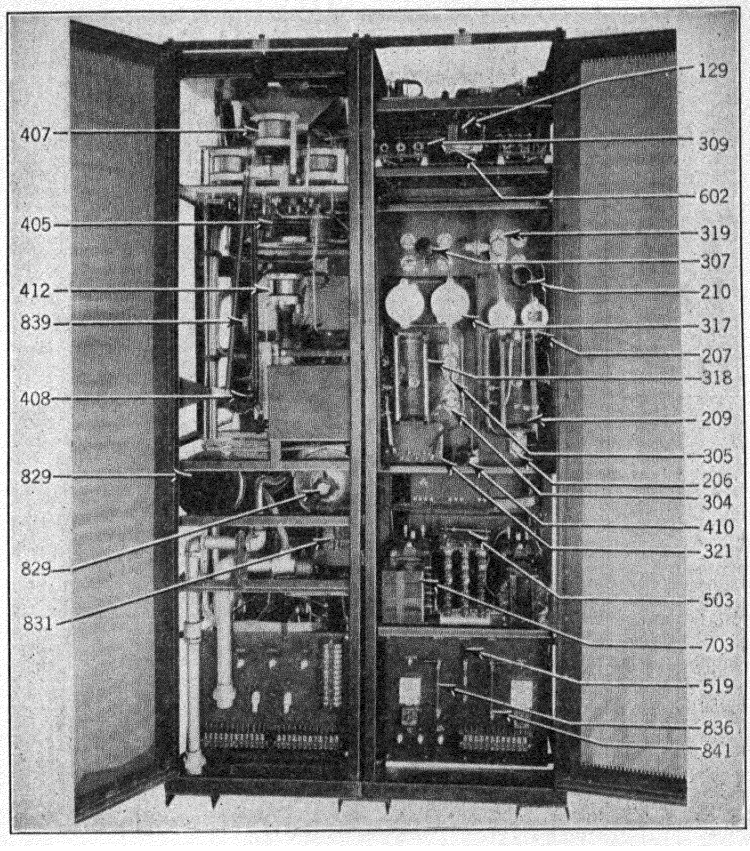

FIG. 481.—Rear view of the RCA 1-kw. broadcast transmitter power amplifier and exciter modulator unit.

causes these machines to build up voltage. The lights burn brilliantly under normal operation and come on in sequence with the automatic starting system.

Thermal overload cutouts are located within the magnetic resistance starting boxes. These overload devices may be set by hand for various percentages of full rating value as marked on the cover. The magnetic

resistance starting boxes permit the starting of motor-generator sets without abnormal line loading, which is an improvement over the conventional installations. In this manner, every precaution is taken to provide equipment which is not objectionable from an operating point of view to municipal power companies, since it is possible that such a power contract may contain restrictions which forbid the direct starting

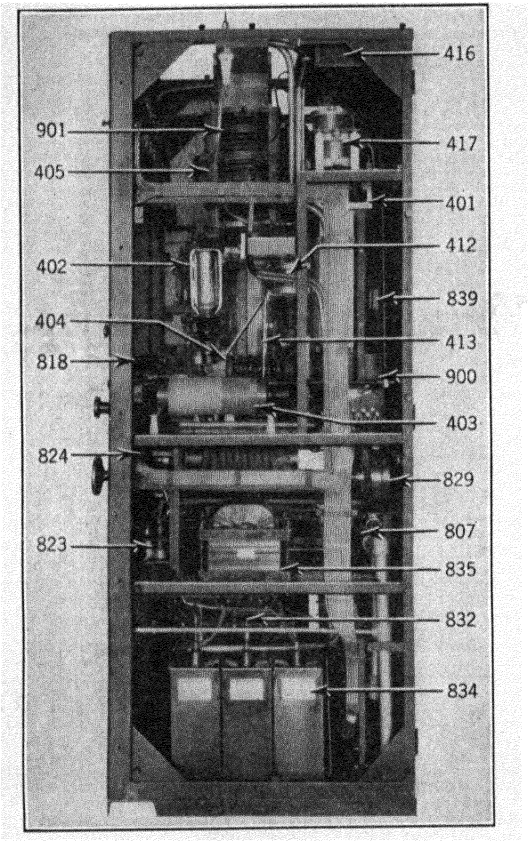

FIG. 482.—Right-hand side view of the RCA 1-kw. broadcast transmitter exciter modulator unit.

of induction motors on a line. The main power switch provided on the front panel, if pulled, removes all power from the transmitter except the lighting circuit which feeds the crystal ovens within the crystal oscillator units in the modulated exciter frame.

Modulator Exciter Unit.—The front of this unit is shown in the left-hand panel view of Fig. 480; the rear is shown in the right-

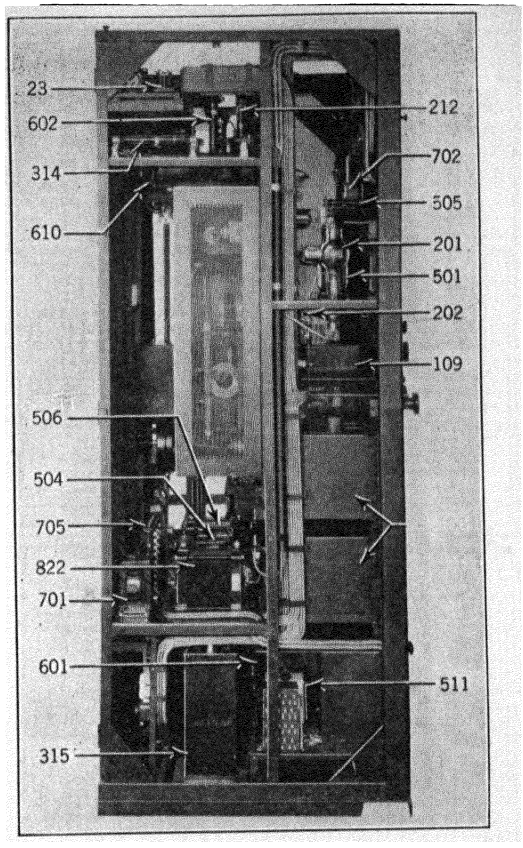

FIG. 483.—Left-hand side view of the RCA 1-kw. broadcast transmitter exciter modulator unit.

hand view of Fig. 481. Right and left side views are shown in Figs. 482 and 483 and the wiring diagram in Fig. 484. The numbered parts may be identified by referring to the listings on pages 911 to 916.

This unit performs the following functions:

1. Generates a constant frequency by means of a crystal controlled oscillator.
2. Amplifies this carrier frequency sufficiently to excite properly the output or power amplifier stage.
3. Receives the low level audio energy from line amplifier and amplifies this to a level sufficient to modulate the radio-frequency systems 100 per cent.

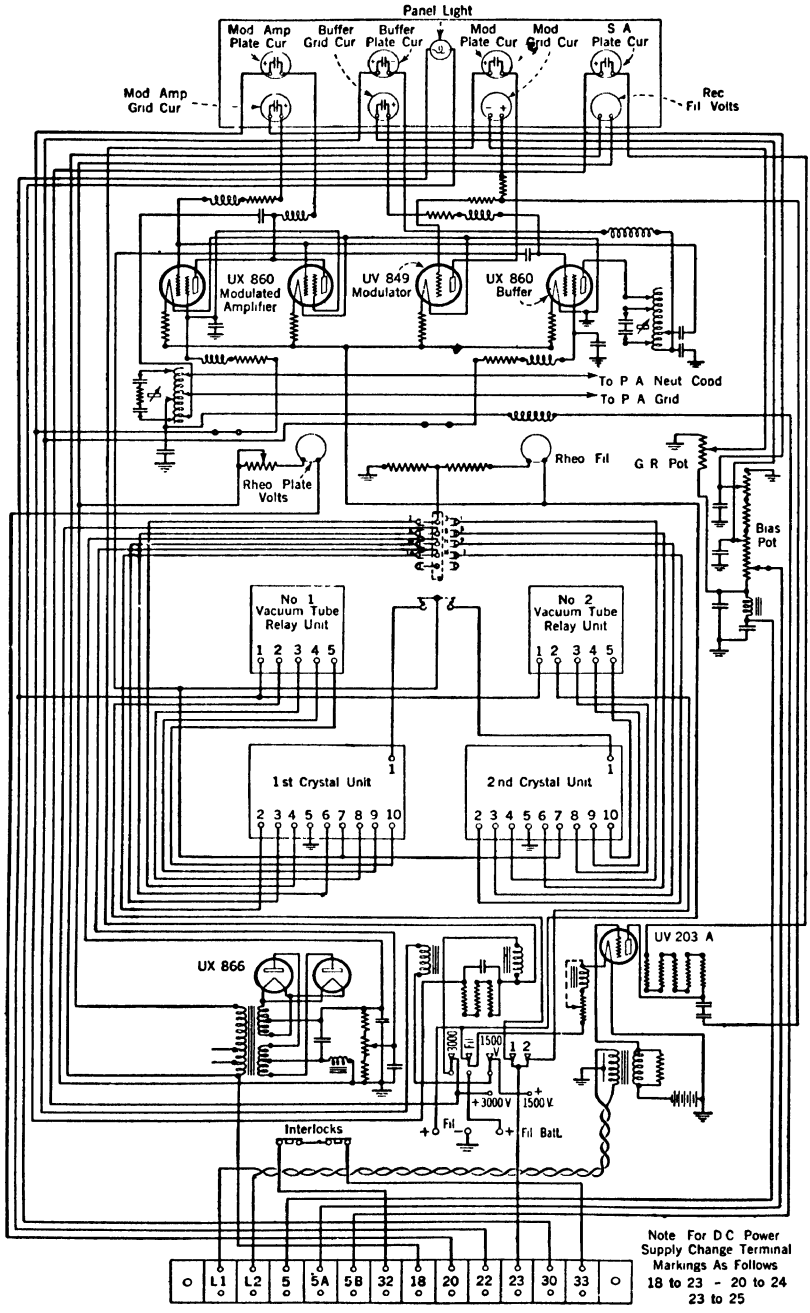

FIG. 484.—Panel wiring diagram for the modulated exciter unit of the RCA 1-kw. broadcast transmitter.

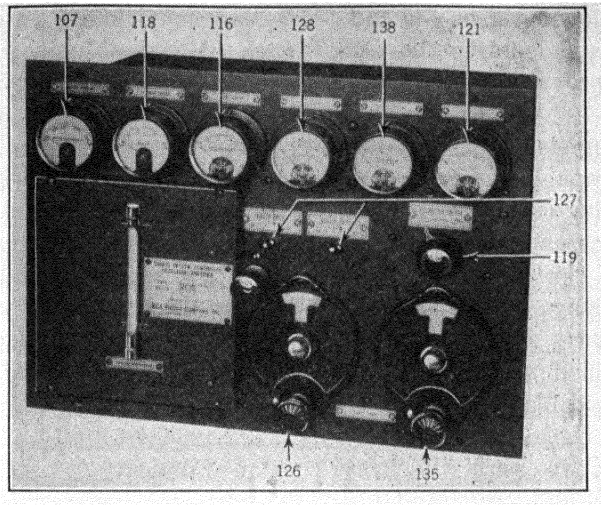

FIG. 485.—Front view of a quartz crystal controlled oscillator-amplifier panel.

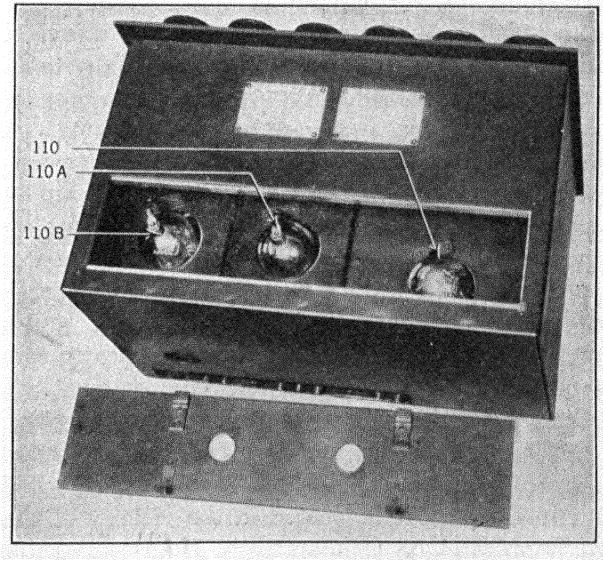

FIG. 486.—Top view of a quartz crystal controlled oscillator amplifier.

Crystal Oscillator Unit.—Front and top views of the crystal oscillator unit are shown in Figs. 485 and 486. Two complete units are mounted behind glass doors in the front panel. A crystal unit change-over switch is provided which permits the use of either unit at a moment's notice.

Each crystal unit is a complete, compact, self-contained assembly, which is capable of being removed in its entirety from the front panel by removing connections made at the rear of each unit. It contains three stages, each thoroughly shielded from the others and from external sources of electromagnetic and electrostatic disturbances. The crystal oscillator stage employs a UX-210 vacuum tube connected in a circuit with a quartz crystal, accurately ground to a specified frequency and at a specified temperature. This crystal plate is connected between the grid and filament of the tube. The plate circuit contains a radio-frequency choke coil.

In order to assure sufficiently constant frequency to conform to the engineering and legal standards of the times, it is necessary to observe certain precautions in the operation as well as the design of such a circuit. It is known that, whereas the piezoelectric or quartz crystal provides the most accurate practical method of frequency control, several factors operating independently or collectively may cause frequency variations greater than the legal permissible tolerances. One of the most important factors regulating the frequency of a crystal after it is once ground to its proper physical dimensions, is the temperature at which the crystal is maintained.

Crystals.—Crystals are made of natural quartz, scientifically selected, correctly and accurately ground to within a very few cycles of any specified broadcasting frequency, at a temperature of 50° to 55° C. The crystal is mounted in a holder which is so temperature-compensated that it maintains constant physical dimensions throughout a considerable range of temperature variations. The crystal holder is mounted inside of a specially designed heater compartment, and means are provided for thermostatic control so that a very nearly constant temperature is maintained inside the crystal compartment. The heater unit used is known as an *attenuated heater*, the heat being applied externally and flowing inward by radiation, convection and conduction through a series of conducting and heat-insulating media. A sensitive mercury-column thermostat is located in the vicinity of the source of heat so that it operates on comparatively small temperature changes of the heater element itself. Because of the great thermal capacity of the conducting and attenuating layers of the heater cell, the resultant temperature deviation at the crystal is but a small fraction of the tem-

perature change which causes the thermostat to operate. In this manner, a compact and convenient type of crystal heater unit is provided to maintain essentially constant temperature of the quartz crystal and holder, and frequency variations due to temperature changes are held to within very narrow limits.

An indicating thermometer, which projects through the front panel of each unit, records the oven temperature accurately. From past experience it has been found that any thermostat which breaks any measurable current soon gives trouble because of pitted contact faces which cause it to lose its calibration. Because of this increased accuracy of temperature control obtainable, a vacuum tube controlled thermostatic regulator is supplied with each oven oscillator unit. The sensitive mercury-column thermostat operates in the grid circuit of a UX-210 control tube which, in turn, actuates a sensitive relay in the plate circuit of this control tube. The relay makes and breaks the current supplied to the electric heater around the outside of the crystal oven. In this manner the thermostat makes and breaks an extremely small current only, which in no wise can damage the thermostat unit, thus assuring exceptionally long untroubled operating life of these sensitive instruments.

The power required to maintain a given crystal oven temperature is approximately 15 watts, and provision is made for switching this heater power on or off, by means of panel board switches located on the rear panel of the set. Individual switches are used, together with individual circuit fuses, thus giving separate heater control to each unit and permitting one, or both units, to be heating constantly. Because it is the usual practice to leave the heaters more or less permanently connected, whether the transmitter is in use or not, the heater units derive power from the lighting circuit since this circuit is in most cases a reliable day-and-night source of power. The transmitter power circuits are so arranged that the main power switch located on the power control panel disconnects all but this crystal heater circuit, thus permitting a complete shut-down of the transmitter without affecting the crystal temperature-regulating equipment. The crystal oscillator filament supply can be externally adjusted by means of the rheostat located on the front panel of the modulated exciter unit.

Ambient Temperature Compensation.—Very great changes in room temperatures may cause a gradual change in the crystal temperature. Such change, however, must exceed plus or minus 10° C. before compensation is necessary. To compensate for ambient temperature effect, a resistance is used in series with the oven heater, and controlled by heater switches No. 1 and No. 2 on the panel. With both heater

switches in the " Off " position, maximum external resistance is in series with the oven heater, and the heat supplied to the oven is then minimum. With both switches in the " On " position, external resistance is short-circuited and full voltage is applied across the oven heater. With one heater switch only in the " On " position, an intermediate condition is obtained.

To effectively regulate oven temperature changes due to ambient fluctuation, a room thermometer should be used. It is most desirable to know the temperature in close proximity to the crystal units, but general changes in room temperature may be accurate enough for the changes which would require compensation. A chart compiled from observed conditions within the station, giving crystal oven uncompensated temperature plotted against ambient temperature for various periods of time, would be useful.

With a drop in ambient temperature causing a drop in oven temperature of $\frac{1}{2}$° C. or more, one or both heater switches should be put in the " On " position until the crystal oven thermometer again registers constant adjustment temperature. With ambient temperature relatively high, both heater switches will probably be in the " Off " position.

The effect of crystal temperature on the carrier-frequency is shown by the temperature-frequency chart furnished with each crystal unit. The attention paid to the foregoing depends entirely upon the choice of the station operators so long as the legal requirements are met.

Other known causes of frequency variations of a quartz crystal include change in filament or plate voltage and reactions including tuning, feed-back, or inductive feed-back. These have been overcome within practical limits by calibrating the circuit with the same meters supplied with the unit, and by careful shielding. Reaction on the crystal oscillator from other parts of the radio circuit is prevented by the two screen-grid buffer amplifier stages built into the crystal unit.

These two buffer stages have identical circuits and apparatus. Each uses a UX-865 screen-grid vacuum tube. The output from the crystal oscillator excites the first buffer amplifier directly. Its plate circuit is tuned to resonance by means of a variable condenser, adjusted from the front panel. The screen-grid feature eliminates the need for neutralizing, so that reactions from tuning the buffer amplifier stage are not reflected back to the crystal oscillator to any noticeable degree. Individual shielding further reduces inductive feed-back between stages. Each stage has its individual plate current meter. Plate voltage on the amplifier and oscillator tubes is measured by means of a voltmeter and its transfer switch.

Each crystal is mounted in its heater oven, and the entire crystal

unit is sealed to prevent any unauthorized internal adjustments. This is for the safety of the broadcaster as well as for quality transmission, and inasmuch as the unit is expertly made, its original adjustment is practically assured throughout the period of operation of the unit. The vacuum tubes can be inserted or withdrawn from the unit through the top of the box. It has been found that the variations in vacuum tubes will not produce perceptible frequency changes, so that the calibration of the unit is not impaired by tube changes.

The two crystal units furnished with the modulated exciter panel are recessed so that the beveled plate-glass doors which cover them are flush with the main panel. The meters and thermometers are, therefore, visible at all times, although inaccessible. For adjustment, the units are accessible by opening the glass doors. It is unlikely that any troubles occurring during operation will be other than tube failures, and these can be identified immediately by observing the meters. In case of such a failure, the spare unit can be switched into service immediately, and the other unit withdrawn from the panel for inspection. These units are supplied with long flexible leads which permit withdrawal without the need for disconnecting wires.

Crystal Calibration Chart.—Each crystal unit is provided with a calibration chart showing the change in frequency of the crystal with changes in temperature. Minute frequency corrections can be made in carrier frequency of the transmitter by regulating the crystal temperature. This correction should be made only when necessary, or at the request of local government inspectors. In general, however, the manufacturer's calibration will be satisfactory, since calibrations are made in accordance with the most refined existing standards of frequency.

To change tubes, it is merely necessary to pull the tube upward until it disengages from the UX socket. The UX-865 tubes will require that the anode connection at the top be first removed.

The buffer amplifiers are tuned by adjusting the variable condenser in the plate circuit until resonance is indicated by a dip in plate current. Adjust for minimum plate current reading.

Radio-Frequency Power Amplifier.—This modulated exciter panel contains two stages of radio-frequency amplification. The first is a straight radio-frequency amplifier employing a UX-860 tube with a screen grid. This stage receives its excitation directly from the crystal unit and delivers its output from its tuned plate circuit into the grid circuit of two UX-860 tubes in parallel. This latter amplifier is known as the *modulated stage* and has a steady plate voltage of approximately 1600 to 1800 volts. This stage is modulated by the audio frequency received by it from the modulator tube and associated circuits. Its

plate circuit is also tuned and its output is directly coupled to the grid circuit ammeters. Because, at this point, modulation at audio frequencies is introduced into the radio system, an explanation of the audio amplifier stages will now be given.

Audio Input.—Audio-frequency power received into the station from the connecting line, after being amplified through the station line terminating equipment, is impressed across the input terminals of a transformer coupled to the grid and filament of a UV-203A tube. This amplifier comprises the speech amplifier, which is a complete assembly, located at the lower left-side of the frame, the speech amplifier tube being accessible through the lower hinged door. It contains the UV-203A tube which is resistance-impedance coupled to the grid circuit of the modulator tubes. Bias batteries for this stage are replaceable by removing the left side screen of the transmitter. The filament circuit of the amplifier is arranged for either battery or generator feed, a change-over switch for same being provided on the rear terminal board. This speech amplifier has sufficient gain to excite one UV-849 modulator tube. A measure of gain control is introduced by supplying the line coupling transformer, previously mentioned, with a secondary resistance load which can be varied to suit particular conditions and then permanently fixed. An individual plate meter for this stage is located on the main meter panel. The normal operating value of plate current is 50 m.a. with a plate voltage of 1000 to 1200 volts.

Modulator.—A UV-849 modulator tube (see Fig. 487), accessible through the tube door in the front panel, receives its excitation from the speech amplifier. Its bias or grid polarizing voltage can be separately varied by means of the variable control located in the center of the panel directly over the tube door. This bias control should be so adjusted that plate current, as indicated by the modulator plate current meter, is 100 m.a. with a plate voltage of 3000 volts direct current. This plate voltage can be adjusted by means of the large rheostat accessible from the rear of the power amplifier and control panel. The bias supply for the modulator is derived from the exciter and bias machine, and tapped off of the potentiometer circuit contained within the modulated exciter frame. This bias supply is adequately filtered by a single stage filter system. The modulator grid circuit is directly coupled, through two coupling condensers in series, to the plate circuit of the speech amplifier.

The modulated amplifier is modulated by the *constant current*, or Heising system, with the exception of a modification which increases the usual percentage of modulation over that obtained in the common type of circuit arrangement. The plate voltage applied to the modulator is 3000 volts, and the modulator is excited sufficiently to produce

a peak reactive voltage across the modulation reactor of approximately 2000 volts maximum, when the input to the speech amplifier is at its normal, or zero level. The modulated r.f. amplifier and the modulator have a common plate supply source. For 100 per cent modulation the steady plate voltage on the radio-frequency stage is reduced to 1800 volts by means of series resistance. In this manner the steady plate voltage to the radio-frequency amplifier is reduced, because it must pass through the series resistor, yet the audio-frequency voltage variations produced in the plate circuit of the modulator and built up across the modulation reactor are admitted to the plate circuit of the radio-

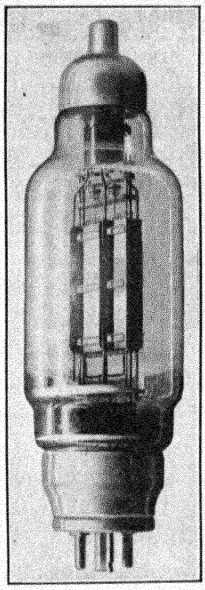

FIG. 487.—Type UV-849 transmitting tube.

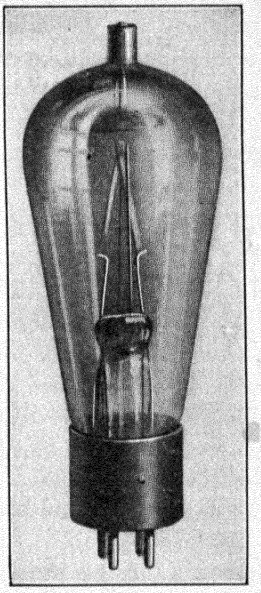

FIG. 488.—Type UX-866 mercury-vapor rectifier tube.

frequency stage without appreciable drop through the capacity leg of this common coupling circuit. One hundred per cent modulation in the radio-frequency stage can, therefore, be accomplished by delivering a peak audio voltage of the same amplitude as the applied direct voltage. The series resistor is made variable so that the direct potential applied to the amplifier can be adjusted to suit various conditions of plate current and modulator audio voltage.

Crystal Oscillator Plate Supply Rectifier.—This unit is located to the right of the speech amplifier; it consists of two mercury-vapor UX-866 tubes (see Fig. 488), replaceable from the front panel through the lower

hinged door. The unit consists of a step-up transformer supplied at a potential of 160 volts from the main power supply circuit in the case of the 50- and 60-cycle power supply, or from slip rings on the filament motor-generator driving motor in the case of d-c. power supply. A series tapped resistor and a variable rheostat accessible from the rear of the modulated exciter unit permit the proper regulation of input potential. A rectifier filament voltmeter is provided on the front panel so calibrated that, when its pointer coincides with the red mark on its scale, correct filament voltage is applied to the rectifier tubes. The plate voltage supplied from the potentiometer incorporated within this unit is also correct when this adjustment is made.

Directions for Adjusting—(*a*) *Crystal Unit Mounting.*—Normally both crystal units will be in position with both crystal ovens operating. When the units are once tuned, no further circuit adjustment is necessary. Unless trouble develops, the tuning controls should not be changed. A record should be taken of the position of each when operating properly so that they may be returned to the same positions if accidentally moved. The beveled glass door on the front panel should be kept closed.

(*b*) *Crystal Unit Transfer Switch.*—The crystal unit change-over switch is located in the center of the main panel directly below the tube door. This switch makes a complete change-over from one unit to the other. It can be thrown at a moment's notice to either position without damage to the transmitter and without manipulating any other control.

(*c*) *Removing Crystal Units from Panel.*—The connections between the crystal unit terminal board and the associated terminal board on the panel are flexible and of sufficient length to permit sliding the crystal unit forward for the purpose of removal, or for changing tubes. To remove a unit from the set, either shut the transmitter off entirely or transfer power to the other unit. To remove power entirely from the crystal unit, its heating circuit switch located on the terminal panel, at the rear of the transmitter, must be thrown to the " Off " position. The unit can now be disconnected at the rear terminal board on the crystal unit. When replacing, use great caution to put the properly marked leads back on the same terminals from which they were previously removed.

The method of changing the tubes in the crystal unit is obvious when the unit is withdrawn. Great care must be exercised that the plate connection on the top of each UX-865 tube is not overlooked. This is a beaded, flexible lead fitted with a friction cap to fit over the glass-supported terminal on the tip of the tube.

Filament Supply for Crystal Modulator and Low Power Radio Amplifier.—The filaments of all tubes, except the rectifier tubes, are fed from the main 21-volt filament bus. An exception is made in the case of the 50-watt speech amplifier tube, in that its filament circuit is arranged for optional operation from the filament generator supply, or from the station storage battery supply. When using battery supply at 12 volts potential, it is necessary to short-circuit the filament filter reactor provided in this filament circuit.

The crystal unit filament supply circuit is provided with a potentiometer unit which provides good regulation in case of tube filament failure within the crystal oscillator, thus preventing damage to the remainder of the tubes. A filament rheostat, located directly below the crystal unit transfer switch, provides an accurate filament voltage control for the crystal unit filaments.

The tube filaments of the other radio-frequency amplifier stages and the modulator tube are fed through individual series resistors so that failure of any one will in no way damage any of the others.

Plate Supply.—Plate supply for the crystal oscillator unit is obtained from the rectifier unit provided for this purpose. Voltages ranging from 100 to 500 are available from this unit by proper taps on the potentiometer supplied. The circuit is designed to give good regulation from this power source.

Plate supply for the speech amplifier tube is derived through a series resistor located in the rear of the speech amplifier compartment, from the 3000-volt generator supply with the appropriate filter system.

Plate power for the first UX-860 buffer stage is derived from the 1500-volt tap on the plate supply generators.

The modulator and modulated radio stages are fed from the 3000-volt generator source, the latter passing through series resistors which reduce the steady plate voltage to approximately 1800 volts.

Bias Supply.—Bias supply, or negative polarizing voltage, is obtained for the speech amplifier tubes from an individual $22\frac{1}{2}$-volt battery supply located in the left side of the rear speech amplifier compartment, and available for replacement purposes from the left side of the unit by removing the side screen. Bias potential for the crystal oscillator unit is derived from the low power supply rectifier, which also provides plate voltage.

Bias potential for all other radio-frequency amplifier stages and modulator tube is supplied by a 500-volt exciter and bias machine located on the same shaft with the filament generator. The proper voltage for each stage is tapped off from a voltage divider and filter unit located on the intermediate shelf accessible from the rear of the unit. A vari-

able modulator bias control located on the front panel directly below the meter panel is provided.

Screen-Grid Polarizing Voltage.—The UX-865 screen-grid radio-frequency amplifier tubes within the crystal oscillator unit derive their screen-grid polarizing voltage from the same source as the plate supply, and are fed through series resistors to provide the correct voltage value.

In a like manner the screen-grid UX-860 radio-frequency amplifier tubes derive their grid polarizing voltages from the same plate voltage source as that supplied to the tube in each case. This voltage is reduced to the proper value by means of adjustable series resistors located on the top shelf of the modulated exciter unit. A removable link is provided in this circuit which makes it possible to connect temporarily a milliameter to measure the screen-grid current for adjustment purposes.

Adjustment of the Modulator Amplifier Circuit.—In tuning the circuit for the first time, one adjustment should be made at a time, progressively, starting with the crystal oscillator unit and progressing through to the output of the modulated stage. Then the audio circuits can be put into operation.

Operations.—The modulator and speech amplifier tubes should be entirely removed from their sockets. Open the two single-pole, single-throw knife switches on the rear terminal panel, and throw the neutralizing switch on the power amplifier unit to neutralizing position. All other tubes should be placed in their respective positions and all the toggle switches on the front panel of the power amplifier unit should be opened. The meter panel flood lights may be left on if desired. Next throw the main power switch on the power control panel. Now push the "Start" button on the power amplifier panel. The master contactors on the power control unit should close and the water pump should start. If the water pressure does not come up as indicated on the pressure gauge on the power amplifier panel it may be necessary to prime the water pump by opening the relief valve and releasing air trapped in the pump casing. When the pressure comes up to the high-pressure setting on the gauge, the water interlock contactor will close on the power control panel and the water-indicating light will light on the front panel of the power amplifier. Next, open either or both tube doors on the modulated exciter and power amplifier panel. The filament stop switch located on the power amplifier panel (toggle switch) may now be thrown, after first making sure that the filament rheostat on the power amplifier panel and the filament rheostat on the modulated exciter panel are on mimimum voltage position, i.e., turned in reverse arrow direction. The filament motor-generator set should start and register voltage on the filament voltmeter on the power amplifier meter panel. Adjust the voltage to

21 volts by turning, in the direction of the arrow, the filament control knob on the power amplifier panel. Next measure the filament voltage on each tube (outside of the crystal oscillator unit) individually and check each of the values against the correct value for each tube according to the transmitting tube chart contained in the Appendix.

Next adjust the filament voltage to the correct value as indicated by the filament voltmeter on the crystal oscillator unit by turning, in the direction of the arrow, the rheostat control knob located on the modulated exciter panel directly under the crystal oscillator unit selector switch.

The modulator and speech amplifier tubes may be replaced temporarily for filament adjustments on each. After checking the correct filament voltage on each, remove them again from their sockets.

Bias Adjustment.—Place a voltmeter across the outside taps on the bias potentiometer and close all doors on each unit, after first throwing the crystal oscillator selector switch to neutral position. The filament interlock relay on the control panel should close, lighting the bias light on the power control panel and the green light on the power amplifier panel. This filament interlock relay on the power control panel should be previously adjusted to pull in at 20 volts and drop out at 19½ volts as indicated by the filament voltmeter on the power amplifier meter panel.

Next adjust the bias interlock relay to close at 475 volts, approximately, and fall out at 450 volts, approximately, as read on the voltmeter previously connected across the bias potentiometer terminals. When it is so adjusted, adjust the bias on each tube outside of the crystal oscillator unit to the correct value as specified in the table on page 958.

Adjusting Crystal Oscillator Rectifier Supply Unit.—To adjust this unit, leave the crystal unit selector switch in a neutral position and disconnect all plate supply taps from the potentiometer or voltage divider connected across the output from this rectifier. By connecting a meter externally by running leads through the screen to a meter located outside, the bias voltage can be adjusted by varying the tap on this potentiometer. In a similar manner, each of the plate supply voltages to the crystal oscillator unit may be fixed. Refer to the tabulated list on page 957 for correct values.

Crystal Oscillator Unit Oven Adjustment.—After adjustment, close both panel board snap switches on the rear panel of the modulated exciter unit thus allowing both crystal ovens to heat. The oven will reach its correct operating temperature and properly regulate approximately 24 hours after the switches are thrown. The thermometer should gradually rise to the correct value as specified for each crystal

and the thermostat and vacuum tube relay unit should accurately maintain the temperature required for the correct frequency.

Adjustment of Crystal Oscillator Unit.—Tune the two buffer amplifier controls until the plate current reading in each case is minimum.

Switch the second crystal oscillator unit into position and adjust as before for resonance. These two units should be very nearly alike in operation, i.e., plate current readings one with the other.

Tuning the UX-860 Buffer Stage.—With the crystal oscillator unit operating properly, grid current should be indicated on the grid current meter for the buffer UX-860 stage providing its filament is lighted and the bias voltage is not excessive. Adjust the taps on the plate tank inductance until it can be tuned to resonance as indicated by a minimum plate current reading after the 1500-volt switch (single-pole single-throw) on the rear of the unit is thrown to the "On" position, and the plate supply generator is started by throwing the toggle switch on the front of the power amplifier panel. When the high-voltage generator is started a red light will appear on the front panel of the power amplifier unit. Now adjust the screen-grid current to correct value. Next attach the excitation clip to the next stage and retune the circuit. Refer to tabulated list on page 958 for correct meter readings.

Tuning the Modulated Amplifier Stage.—With the correct bias and filament voltage on the two UX-860 tubes in this stage, grid current should be evidenced by a grid meter deflection for this stage. Reduce the plate supply voltage to approximately one-half of its correct value. Connect about 4 ohms of phantom load resistance into the tank circuit and adjust the tank circuit for resonance as indicated by a minimum plate current. Adjust the screen-grid current to correct value. Attach the excitation clip to the power amplifier stage and retune for resonance. At this point, all radio-frequency stages are approximately tuned but will probably need slight corrective adjustments when the set is finally ready for service.

Note: Carefully watch the power amplifier tank meter because the power amplifier stage is in the "Neutralizing" position and not neutralized. Keep the meter on scale by turning the neutralizing control until it reads zero. Use the greatest of care in doing so.

Adjustment of Speech Amplifier.—With reduced plate voltage, adjust the bias battery voltage by removing the side screen and measuring the voltage with an externally connected voltmeter. Connect a 0–2500 voltmeter from the tube plate terminal to ground. With correct bias voltage on the tube, as specified on page 949, apply plate voltage. Plate current when voltage is as specified should be approximately 40 to 50 milliamperes.

Adjustment of the Modulator Stage.—With the modulator bias control in mid-position, adjust the bias potentiometer tap to give 150 volts. This voltage must be read on an externally connected voltmeter by running leads through the side screen. Bias control should give a variation of approximately 50 volts. With a plate voltage of 3000 as measured on an externally connected meter, the modulator plate current should be made to read 100 milliamperes by adjusting the bias values.

Caution: *When making tap adjustments, etc., inside of the set, shut off the power before proceeding. It is possible, however, to leave the filament and bias motor-generator set running since opening a door interlock automatically removes bias voltage, and the circuit can be safely manipulated. Although high-voltage plate supplies are also removed by the opening of a door, it is a safe common sense rule to shut the plate machine down.*

Although every precaution is made in designing high-voltage equipment to protect the operating personnel against contact with dangerous voltages, it should be borne in mind that such contact could prove fatal.

The practice of disconnecting interlocks during adjustment periods is distinctly dangerous and should be avoided at all times.

1 Kw. Broadcast Power Amplifier and Control Panel. The assembly of this panel and the principal parts thereof are shown in the right-hand panel of Fig. 480 and the left-hand frame of Fig. 481. The numbered parts will be found listed on pages 913, 914 and 915. The diagram of connections is given in Fig. 489.

Water Cooling.—Water is fed to the unit by a 1¼-in. diameter pipe coming from the centrifugal pump. The water passes through a thermostatic control device, with a tap leading off to the pressure gauge on the front panel. Cooling water then continues through an insulating hose to the plate or tube jacket of the tube, returning through another parallel rubber hose to the outlet water pipe which returns to the cooling apparatus.

Filament Supply.—The filament supply comes directly from the generator source and is applied directly to the tube filament connections. The filament interlock or undervoltage device on the control panel is connected across this source as is also the filament voltmeter located on the meter panel. All the other tube filament circuits fed from this generator are so arranged with series resistors as to give the correct tube terminal voltage in each case when the filament voltmeter on the power amplifier panel reads 21 volts.

Bias Supply.—Some explanation of the arrangement and adjustment of bias was given in connection with adjustment of bias on the low

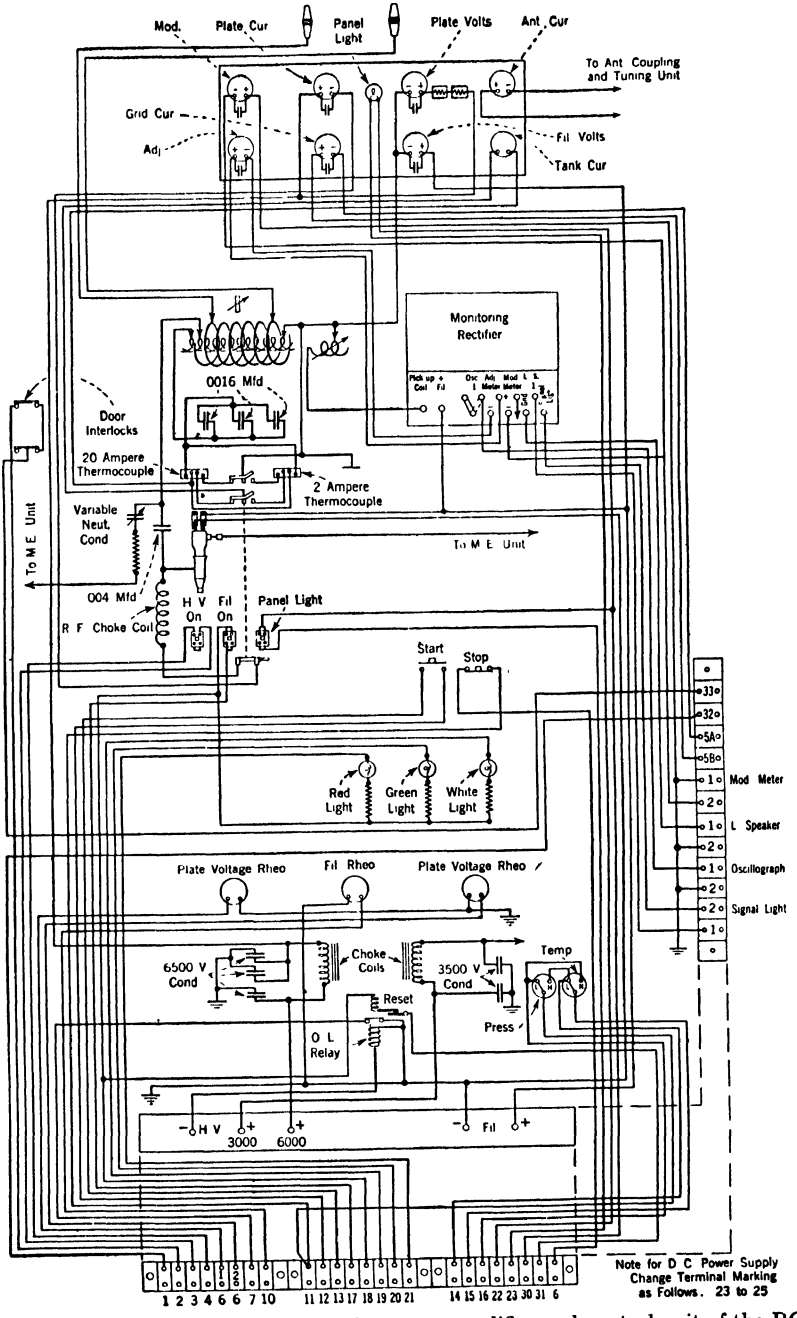

FIG. 489.—Panel wiring diagram for the power amplifier and control unit of the RCA 1-kw. broadcast transmitter

power radio amplifiers which are all associated with the one bias generator. The power amplifier tube requires the highest bias value compared with the other tubes in the set and, because of this, is connected directly across the outside terminals of the potentiometer. In this manner a low resistance grid circuit for the power amplifier stage is provided.

Plate Supply.—Plate supply is taken from the two 3000-volt machines connected in series. A plate circuit disconnect switch, which is an integral part of the neutralizing change-over switch, is available through the rear door of the power amplifier and control unit. Operators should take full advantage of the safety apparatus provided for their protection.

Radio-Frequency Circuit and Linear Amplifier.—Fig. 489 shows the connections for this panel. A double-pole double-throw change-over switch interconnected mechanically with the plate circuit disconnect switch serves to change the thermocouple in the tank circuit of this stage so that a common tank meter provided on the meter panel can be used for neutralizing purposes as well as for observing the normal operating tank current. In the neutralizing position, this meter registers 2 amperes full scale deflection, and the high voltage is removed from this stage. In the normal position the meter registers 20 amperes full scale and the high voltage supply is connected.

Grid and plate current meters are provided for the power amplifier tube. The antenna ammeter is also located on this panel and wired to the thermocouple located directly in the antenna circuit.

A modulation monitoring rectifier is also provided within this panel with an adjustment meter on the meter panel. A modulation meter, here located, reads percentage modulation directly. The pick-up coil actuating this monitoring rectifier is located at the top end of the main tank circuit coil.

Adjustment of Power Amplifier Stage.—Assuming that all previous stages are operating properly, the plate voltage should be reduced by means of the rheostat located in the rear of the power amplifier and control panel and available through the rear door.

Next, shut down the set and clip on the modulated stage tank coil, the excitation lead and neutralizing lead to the power amplifier stage. Retune the tank circuit of the modulated stage if necessary, and with an externally connected voltmeter measure the bias voltage at the grid and filament terminals of the tube. It should read 350 to 450 volts. Grid current should now be observed on the grid current meter for this stage. Only a slight amount will be observed.

The tank circuit of the power amplifier stage should now be detuned.

With the neutralizing switch thrown in " Neutralizing " position, start up the set and gradually tune to resonance. This must be done very carefully. Keep the tank current meter on scale by turning the neutralizing control in the proper direction. When the tank circuit of the power amplifier stage is exactly in resonance as indicated by a definite peak point reading on the tank ammeter, turn the neutralizing control until the tank ammeter reads zero. It should be possible by adjusting the neutralizing control to return this tank meter to absolute zero reading. The set is now neutralized and ready for plate power on this last stage.

Before applying power to the power amplifier stage make sure that the dummy antenna load (or antenna coupling) is made to the antenna, otherwise the tank circuit meter in the power amplifier stage may burn out.

Throw the neutralizing switch to the normal closed position and start up the set, watching closely the plate current meter as the set starts up. This meter should not exceed 0.6 ampere with the normal voltage on all stages and with the proper bias on the power amplifier stage, and loaded properly. When this has been done, the coupling line to the 1-kw. amplifier can be adjusted for resonance and proper termination impedance. Until the coupling and tuning adjustments on the terminal end of a transmission line are correctly made, there will be a reaction on the preceding excitation amplifier. Any adjustment which upsets the plate tank tuning in the previous stage indicates incorrectness in the termination and tuning circuits.

Do not change the plate tank tuning to correct for this reaction. Rather, adjust the termination so that at resonance there is practically no reaction. A properly terminated transmission line will act on the preceding amplifier as a pure resistance load. Therefore, the full load tuning position on the tuning dial should be the same, or very nearly the same, at the no load tuning position.

When all circuits are correctly loaded, the tuning controls will apparently have considerably less tuning effect than they show at no load. This is due to apparent reflection of load resistance into the tank or plate circuit of the tube, thus broadening the resonance characteristic of the circuit.

It is well at this point to go back and check each successive stage for slight correcting adjustments, after which the set may be modulated.

With 100 per cent sustained modulation, i.e., constant tone on the set, no appreciable change, either increase or decrease, should be noticed on the plate current meter in the power amplifier stage. If any change is noted, it denotes a dissymmetrical or distorted modulation character-

istic. The tank circuit current, however, will increase 22½ per cent over its unmodulated value.

Adjustment of Modulation Indicating Equipment.—With the set normally adjusted and with no modulation on it, increase the pick-up for the modulation-indicating equipment by moving the pick-up coil more closely into inductive relationship to the power amplifier tank coil, until the adjustment meter on the front panel reaches the correct predetermined value as marked on the face of the meter. Whenever this meter reads the correct predetermined value during the unmodulated condition, the " per cent modulation " meter will read percentage of modulation after modulation is applied to the set. This percentage of modulation reading will be correct for sustained modulation only since the meter will not follow rapidly enough the peaks of modulation under operating, or program conditions. The meter, however, will give a correct value of average modulation at all such times.

Discussion of Power Amplifier Tank Tuning.—The first step in the adjustment of the plate tank circuit for any given frequency is to obtain the proper inductance and capacitance values. After the transmitter is installed and thoroughly tested, a chart is prepared which shows the approximate values in all stages for the operating frequency chosen. Such values are not made by trial and error methods.

For any operating frequency the ratio of circulating volt-amperes to watts output into the load is chosen for this particular type circuit to be 15 to 1. This means that for 1000 watts output of carrier power at 30 to 35 per cent efficiency, the circulating volt-amperes should be 15,000. To give 1000 watts output, the effective, or R.M.S. value of a-c. plate voltage per tube must be 1620 volts. To maintain 15,000 volt-amperes of circulating power, the effective value of tank current will be 9.25 amperes. Knowing the voltage to be built up across the tank condenser and the circulating current value, we can solve for the capacitive reactance. This gives a value of 175 ohms. Knowing the reactance of the condenser and the operating frequency, we can solve for the correct capacitance.

The preceding discussion is based on a " tube " carrier efficiency of approximately 30 per cent. In actual cases this efficiency may increase slightly which will allow some slight deviation in the values as specified. If the effective, or R.M.S. value of voltage across the tank condenser is 1620 volts, for 100 per cent modulation this value increases to 3240 volts, or twice normal. In like manner the instantaneous current value will be twice normal or 18.5 amperes when modulating 100 per cent. Because the meter in this tank circuit is an averaging device, it will

indicate only 22.5 per cent increase over normal value, or read approximately 11.33 amperes when modulating 100 per cent sustained.

When the correct capacitance value is chosen in line with the preceding discussion, enough tank inductance should be used to bring the circuit to resonance.

Monitoring Rectifier.—The monitoring rectifier unit is mounted in the power amplifier and control panel. A removable cover permits of easy accessibility. Within the unit are two UX-280 tubes, chokes, condensers, and so on. The tubes are removable by removing the top cover. Filaments are fed from the main 21-volt bus through series resistors. The purpose of the monitoring rectifier is to provide a means of measuring accurately percentage of modulation, and providing an aural check on the outgoing wave. In addition, whenever the power amplifier tank circuit is energized, a relay within this unit will close a signal lamp circuit which lights a 110-volt lamp on the associated speech input equipment.

The small amount of power needed to operate this unit is obtained by inductive coupling to the power amplifier tank coil. An adjustment meter in circuit with the first rectifier tube is provided on the front panel, by means of which the correct coupling adjustment is obtained. A second meter on the front panel marked "Percent Modulation" is connected in circuit with the second rectifier, and reads percentage of modulation directly. A link is provided in this meter circuit which permits a second per cent modulation meter to be wired in, and located at a remote point such as the studio or audio control room, if desired.

Filtered loudspeaker and oscillograph circuits are available as shown in the circuit diagram, Fig. 470. Unless the adjustment meter pointer rests on the predetermined adjustment mark with no modulation on the set, the per cent modulation meter will not register correctly. Care should be taken to see that the circuit conditions are such that this is so. The variable feature incorporated in the untuned pick-up coil permits of very close pick-up adjustment. This adjustment should be made by trial methods and, when once found, should be locked into place by tightening the mounting screws on the pick-up coil support.

General Information on Linear Amplifier Operating Characteristics.—The following may be considered as the essential points on linear amplifier operating charactertics:

(1) All of the radio-frequency tubes operate either as Class B or Class C amplifiers. By this reference is meant that all radio-frequency amplifier tubes are operating at high bias or negative grid polarizing potential. Therefore, the plate

current for the amplifier tube is zero, or very nearly so, when no radio-frequency excitation is applied.

(2) The output power and input power (as evidenced by plate current) increases as the exciting radio-frequency voltage is increased.

(3) For unmodulated carrier frequency operation the tube is running very much under-excited and the efficiency is therefore comparatively low (30 to 35 per cent), and the power output is only one-fourth of the tube rating at the plate voltage when used.

(4) As modulation is increased to 100 per cent no appreciable change in plate current should take place. The tank current, however, will increase. It is well to note here, however, that if 100 per cent modulation is exceeded, the plate current will increase slightly, thus giving evidence that some distortion is taking place in that stage.

(5) Increased carrier output can be had by merely coupling tighter to the preceding stage; however, the transmitter is not designed to modulate 100 per cent any appreciable output greater than the specified 1000-watt carrier.

(6) With a 1-kw. carrier, when modulating 100 per cent the transmitter is delivering 1.5 kw. continuously to the antenna.

(7) Assuming that correct excitation is being applied to the power amplifier stage, to increase carrier output, i.e., to load the power amplifier, it is merely necessary to increase the number of coupling turns connected across the transmission line. Variation of the number of these coupling turns should not affect the tuning of the power amplifier tank circuit if the transmission line is properly adjusted.

Antenna Coupling and Tuning Unit.—The antenna coupling and tuning unit located in an enclosed tuning house at the foot of the antenna lead-in is an assembled self-contained unit as shown in Fig. 471, the numbered parts of which are listed on page 928. Within the unit are contained a transmission line terminating tank circuit, coupling coil to antenna and antenna loading and series capacitance equipment. In addition a static bleeder, or antenna drain circuit, is included for protection against static charges and lightning.

Controls for tuning the transmission terminating equipment and antenna proper are located on the front panel. An antenna current meter is also located within a protective case on the front panel. A

thermocouple unit which is interconnected with the power amplifier meter panel makes it possible to observe the antenna current from within the station as well as from within the antenna tuning house. The equipment is mounted on heavy asbestos panels which have been copper coated on the rear to provide an excellent radio-frequency shielded front surface. This simple precaution assures protection to the operating staff against accidental radio-frequency burns, since the panel is essentially dead front.

Antenna Transmission Line.—The output of the 1-kw. power amplifier is coupled to the antenna through a two-wire transmission line. The antenna coupling and tuning equipment is housed in a separate building directly under the antenna, usually at some distance from the station proper.

Any infinite length transmission line has a characteristic impedance sometimes referred to as the surge impedance, which is a function of the physical size and spacing of the conductors comprising the line. It is the impedance offered by such a line as viewed from the sending end.

If a piece of an infinite line is cut off and the open end closed by an impedence equal to the characteristic impedance, it will act on the sending end driver exactly like the corresponding infinite line. An infinite transmission line acts to the driver like a pure resistance load, i.e., power leaves the driver into the line, never to return. Hence, no reflection of power takes place. Similarly if a finite transmission line be terminated properly by closing its free end with an impedance equal to the characteristic impedance of an infinite line of equal physical dimensions in regard to diameter of wire and spacing, such a properly terminated line will act on the driver as a purely resistance load. Now power reflection will take place and, hence, no appreciable line loss will occur and the efficiency of transfer from driver to load will be very high.

In general practice, transmission lines for radio frequencies will have characteristic impedance of from 500 to 800 ohms, although a 600-ohm line is generally used. This value of characteristic impedance is arbitrarily chosen, and the lines built to conform to it.

The termination of a transmission line is one of the most important adjustments of the entire transmitter, and will have the greatest influence on the efficiency and range of the station. A very important point in this connection is that the terminating impedance must equal the characteristic impedance of the transmission line. If, therefore, this characteristic impedance is 600 ohms, the termination must be a resistance of 600 ohms or a network with unity power factor as viewed externally and an equivalent impedance of 600 ohms when measured at the points where the transmission line is connected.

If this condition is not met, not all of the power delivered by the driver will be dissipated in the terminal network which includes the antenna. The amount of power which is not consumed in this terminal network will surge back and forth, from one end of the line to the other (reflections) until it is finally dissipated in the line itself, never getting into the antenna circuit at all.

When the line is correctly terminated, all the power delivered from the power amplifier will be delivered to and consumed by the load, the only loss being the I^2R loss in the conductors which is too small to consider. Under these conditions the transmission line current is a minimum for a given power output.

On all broadcast installations consideration is made in designing the transmission line terminating network so that it acts in a manner to suppress the transfer of harmonic power to the antenna itself.

Antenna Tuning.—The terminating condenser, balancing coils, loading coil and antenna series condensers, with the antenna proper, form a tuned radiating system. In the majority of cases the antenna itself will be operating approximately 30 per cent below its fundamental frequency.

After once tuning the antenna system to the carrier frequency, balancing it, and forming a proper termination for the transmission line, no further adjustment is necessary. To increase or decrease the power output from the antenna, the only adjustment to be made is the increase or decrease of coupling coil turns. This variation of coupling turns merely increases or decreases the voltage applied to the line, as the case may be.

A transmission line used for coupling a radio transmitter to its antenna comes under the category of an overhead open wire line operated at high electrical frequencies. Because of this, its characteristic impedance is always a simple non-inductive resistance.

To adjust the transmission line terminating equipment and the antenna system, it becomes necessary to tune to resonance separately the tank terminating and the antenna circuit itself. This can be done by coupling each of these circuits separately to an external low power oscillator which has been previously adjusted for the required frequency. When adjusting the tank circuit, the transmission line should be disconnected at the transmitter by removing the clip leads from the pick-up coil on the power amplifier unit. Resonance is indicated by connecting in series with each circuit a suitable radio-frequency low reading ammeter and adjusting the circuit constants until a maximum deflection is obtained.

When adjusting the tank termination a maximum permissible

amount of inductance should be used which will result in a minimum value of capacity for any particular setting. In other words, utilize so far as possible all the turns on this inductance coil. With both the tank termination and antenna adjusted to resonance at the operating frequency, remove the small resonance-indicating meter used for this adjustment and connect the circuits for normal operation. It is now permissible to clip onto the pick-up coil in the power amplifier and start up the set at reduced voltage on the power amplifier.

Recheck resonance conditions in all circuits to make sure that all are exactly in resonance by adjusting the flippers until a maximum antenna current reading is obtained. The voltage on the power amplifier tube may then be increased to its normal value.

Assuming that a 600-ohm transmission line is being used, insert in either or each line at the output terminals of the transmitter a 0–2.5 ampere radio-frequency ammeter. Increase the number of turns on the pick-up coil until this meter reads 1.3 amperes with the transmitter in an unmodulated condition. The transmitter will then be delivering slightly over 1 kw. of carrier power. For any other value of transmission line impedance the correct current reading in the line can be computed by the formula listed below:

$$I = \frac{E \text{ line}}{Z \text{ line}} \qquad \text{when } Z = \text{the impedance of the line.}$$

Water Cooling and Circulating Unit.—This interesting piece of equipment, used in broadcast transmitters, possesses some unique features.

Figs. 473 and 474 show the assembled equipment, including copper radiator, especially built for water cooling purposes, driving motor and fan, integral water circulating pump of high efficiency, water strainer and relief or priming plug. A by-pass gate valve is included which provides accurate pressure adjustment of output water flow. The complete unit terminates in brass unions ready for connection to the water system.

Fig. 475 shows a 15-gallon expansion tank with water gauge and visual, vented water-flow indicator. Experience with the older types of cooling systems utilizing cumbersome cast-iron radiators indicates that considerable difficulty with trapped air in the system is experienced. This trapped air appears in any type of hot water heating or cooling system, and in the older types of apparatus it is necessary to relieve it at intervals, manually, by opening an escape or bleeder valve located on the radiator. The addition of the vented water-flow indi-

cator automatically releases trapped air in the system and prevents its circulation past the tube jacket in the form of bubbles, thus eliminating any chance for localized tube jacket heating and consequent breakdown of the tube jacket.

The cooling unit is rated at 4 kw. continuous dissipation and this rating is based on an ambient room temperature of 100° F. The maximum allowable water temperature should not exceed 150° F. anywhere in the system. The cooling system is therefore of more than ample capacity, and is adequate to cool the transmitter even if located in a tropical climate. The unit, when installed should, of course, be located in a position where a good supply of cooling air can be obtained. Approximately 1700 cu. ft. of air per minute is forced through the solid copper cooling fans.

Power Supply Unit.—The power supply unit consists of two three-unit semi-enclosed motor-generator sets.

The first of these is a filament and bias supply motor-generator which consists of an 80-ampere 33-volt generator and 500-volt 1.5-kw. generator driven by a 7½-horsepower motor. The 80-ampere 33-volt generator supplies all tube filaments except the UX-866 rectifier tubes. The 500-volt generator supplies the bias for all tubes except those contained within the crystal oscillator unit and the speech amplifier. In addition it supplies excitation power for the filament machine as well as for the high-voltage plate generator. With the exception of the 500-volt generator, all others are externally excited, consistent with good design in that flexibility, reliability and excellent regulation of power generators are assured in this manner.

In the case of a 220-volt 60-cycle and 230-volt d-c. drive, this motor-generator unit rotates at 1750 r.p.m. In case the supply is 220-volt 50 cycles, it is rated at 1450 r.p.m.

The second unit is a three-unit high-voltage motor-generator set consisting of two identical 4.5-kw. 3000-volt generators driven by a 14½-horsepower motor. For operation with the type 1-B transmitter these generators are connected in series and rated at 7½ kw. at 6000 volts. The armatures in each are interchangeable, each being insulated for maximum high voltage so that only one armature which will fit either machine need be carried for a spare. This unit also in the case of a 220-volt 60-cycle and 230-volt d-c. supply revolves at 1750 r.p.m. and in the case of 50-cycle supply at 1450 r.p.m. These machines are especially designed and constructed to provide for continuous service, and in addition are quite free from voltage ripple in their outputs. When wired for service with the type 1-B transmitter the voltages available are 1500, 3000, 4500 and 6000 volts. These machines are completely

enclosed and protected by means of perforated metal screens. They are especially built for broadcast service.

Note: When a d-c. driven filament and bias motor-generator set is supplied, slip rings on the driving motor provide 160-volt, 60-cycle a-c. power supply for the crystal oscillator rectifier unit.

GENERAL OPERATING INSTRUCTIONS

When the transmitter has been adjusted ready for operation, the starting and stopping involve comparatively simple actions on the part of the station operator. The action which takes place within the transmitting equipment, however, is quite complex. Therefore, it might be well to review the sequence of operation which is set in motion by pressing the transmitter start button.

To Start Transmitter.—First make sure that the main circuit switch on the power control panel is closed and that the crystal heater switches on the rear terminal board on the modulated exciter unit are "On." Also check to see that all high-voltage disconnect switches in the rear of the modulated exciter unit are closed and that the neutralizing switch on the power amplifier and control panel is in the normal running position. When the main circuit switch is closed, the white 220-volt circuit-indicator light on the power control panel will light.

Make sure that no one is near the antenna tuning equipment in the remotely located tuning house, or working on any part of the equipment, and that all doors are closed.

Turn the crystal oscillator unit selector switch to either "On" position. Make sure that windows or doors leading to the room containing the water cooling unit are open so that a good supply of air is available.

The start button at either the power amplifier or the remotely located operator's desk may now be pressed. Upon doing so, master contactors on the power control panel will close, starting the water circulating pump and cooling fan. Water pressure will build up and begin to flow as evidenced by the visual water-flow indicator mounted at the top of the expansion tank near the circulating pump. If the pump fails to start, the main circuit switch may be open, or fuses blown on the control panel. The pressure indicator, on the water pressure gauge located on the front panel of the power amplifier and control unit, will increase and lie against the high pressure contact stud, providing water pressure is sufficient. If water pressure is low, it can be increased by turning the by-pass pressure regulating valve on the cooling unit in a clockwise direction. When the pressure indicator touches the high

pressure contact stud, providing water temperature is low and that the thermostatic device is functioning properly, the contactor marked water interlock will close, lighting the water (white) light on the power amplifier panel and locking up the water pressure contact, so that the pressure indicator may touch the high pressure stud and float between low and high pressure settings without shutting down the transmitter. If the low pressure stud is touched, however, the water interlock relay will fall out, thus shutting down the set.

When the water interlock relay closes, the contactor marked " Filament M.G." will close, providing the " Filament Stop Switch " on the front panel of the power amplifier and control unit is closed or in the " On " position. The contactor serves to start up the filament motor-generator set by closing the coil circuit in the $7\frac{1}{2}$-horsepower magnetic resistance starting box located at the top rear of the power control panel. This is a " step " type starter and will automatically bring the machine up to speed properly without overloading, even temporarily, the supply line.

When the 500-volt bias machine builds up so that it energizes the field of the filament generator, filament supply voltage will build up gradually as evidenced by the voltmeter reading on the power amplifier meter panel. The crystal oscillator unit filament voltage will also build up as indicated on its individual meter. The white 500-volt circuit-indicator light on the control panel will light.

Bring the generator up to 21 volts by turning in a counterclockwise direction the filament rheostat on the power amplifier and control panel. Afterwards adjust the filament voltage on the crystal oscillator unit by adjusting the rheostat provided on the front panel of the modulated exciter unit.

When the filament supply voltage reaches approximately 20 volts, the filament interlock contactor on the power control unit will go in, providing the doors are closed tight. This lights the green filament light on the power amplifier panel and also the white 21-volt circuit-indicator light on the power control panel. At this instant also the contactor (marked bias voltage) will close, the crystal oscillator unit supply rectifier will start up and supply power to this unit, and the coil circuit in the magnetic resistance starter box located in the lower rear part of the power control panel will be energized. This step starter will bring the high-voltage supply machine up to speed in a manner so as not to disturb the supply line.

Note: Thermal overload cutouts are provided in each of these two starter boxes. They must be properly set to insure uninterrupted normal operation. The red indicator light, denoting that the high-

voltage plate supply machine is in operation, will light providing the plate stop switch on the power amplifier panel is not in the " Off " position. If the switch is closed, the bias interlock on the power control panel would have gone in when the 500-volt bias and excitation generator built up voltage. This serves to energize the field of the high-voltage generators and apply bias so that the transmitter begins to function properly.

If the circuits are properly adjusted, the transmitter will function properly; if an overload condition exists, the overload circuit-breaker located behind the front panel on the power amplifier and control unit will release, thus removing field excitation from the high-voltage generators. The overload relay is to be operated without oil, and with the damping holes uncovered. If the overload relay does trip, it may be reset manually by pressing the " Reset " button on the front panel located directly over the water pressure gauge, or reset electrically from the remotely located operator's desk by pressing the electrical reset button there.

Automatic Stop.—The transmitter will automatically stop itself for any of the following reasons:

(*a*) Water temperature excessive.

(*b*) Water pressure low.

(*c*) Failure of water circulating system through faulty motor, pump or from loss of water because of excessive leakage.

(*d*) Filament voltage too low.

(*e*) Door open.

(*f*) Blown fuses on power control panel.

(*g*) Low bias voltage because of faulty bias machine.

(*h*) Stopping of filament motor-generator set owing to opening of thermostatic overload devices.

Individual plate rheostats are incorporated for each high-voltage generator. That for the 0 to 3000 volt unit is located in the rear of the power amplifier and control frame, and available for adjustment purposes through the rear door. The rheostat controlling the voltage on the second machine is located on the front panel of the power amplifier and control unit.

The sequence in stopping the transmitter is described as follows: When the " stop button " on the power amplifier panel or on the operator's desk is pushed, master contactors on the control panel fall out, breaking the field excitation on all generators except the exciter genera-

tor and stopping the water circulating pump. The red high-voltage supply light goes out. At the instant that field voltage is removed from the filament machine, the filament interlock contactor falls out which shuts down the plate motor-generator set, removes the green filament light from the power amplifier panel and cuts off the crystal oscillator unit rectifier supply. As water pressure falls, the filament motor-generator set stops and the water light goes out on the power amplifier panel.

When leaving the set for a long interval, it is well, after the set stops, to open the main primary power supply switch which shuts down the transmitter completely except for crystal heater power, which is separately fused and operated from the lighting circuit so that it may be left more or less permanently connected.

The adjustment of this transmitter requires considerable care. The following information should prove to be a valuable aid to the operating personnel in making the necessary adjustments.

Crystal Oscillator Unit.—For frequencies higher than 1200 kc. the lower half of the plate circuit inductance coils in both of the buffer amplifier stages should be permanently short-circuited. When adjusting the condenser settings, care should be taken to see that the dial readings are approximately the same at all times, otherwise the crystal oscillator unit will double its initial frequency in the last buffer stage.

Note on the Adjustment of Crystal Oscillator Unit.—For operation of the crystal oscillator on frequencies higher than 1000 kc. the following revisions are necessary.

Tank circuit coils on both amplifiers, designated as items 125 and 136 on the schematic diagram in Fig. 470, must be revised by short-circuiting one-half of the coil. A short-circuiting link is provided for this purpose. The excitation tap to the next stage must also be moved to come directly to the same tap which goes to the plate of the tube.

A similar plate coil designated as item 102 must be revised by short-circuiting one-half of the coil winding by means of the removable link provided for this purpose.

TABLE OF TYPICAL METER READINGS

Crystal Oscillator Unit:

Filament Voltage	7.5 volts
Crystal Oscillator Plate Current	35 milliamperes
First Buffer Amplifier Plate Current	20 milliamperes
Second Buffer Amplifier Plate Current	20 milliamperes
Crystal Oscillator Plate Voltage	185 volts
Buffer Amplifier Plate Voltage	550 volts

Third Buffer Amplifier:

Filament Voltage	10 volts
Plate Voltage	1600 volts
Screen-Grid Plate Voltage	700 volts
Grid Bias Voltage	375 volts
Plate Current	60 milliamperes
Grid Current	4.5 milliamperes

Modulated Amplifier:

Filament Voltage	10 volts
Plate Voltage	1250 volts
Series Grid Voltage	500 volts
Grid Bias Voltage	475 volts
Plate Current	140 milliamperes
Grid Current	29 milliamperes

Modulator:

Filament Voltage	11 volts
Plate Voltage	3000 volts
Grid Bias Voltage	110 volts
Plate Current	100 milliamperes

Power Amplifier:

Filament Voltage	21 volts
Plate Voltage	6000 volts
Grid Bias Voltage	375 volts
Plate Current	550 milliamperes
Grid Current	20 milliamperes

These readings with the exception of the value for filament voltage are only typical and may be used as a guide toward the proper adjustments. Under some conditions of adjustment the actual readings may deviate slightly from the values given in the foregoing table.

STATION MAINTENANCE—TYPE 1-B BROADCAST TRANSMITTER

Safety.—Operators are cautioned against working on the transmitter when door interlocks are wedged. The apparatus is designed to be dead front, and so arranged that contact with dangerous circuits is impossible. Certain deliberate violations of safety provisions, such as wedging the interlocks in order to operate with doors open, cannot be guarded against in the design of the transmitter. It is well to emphasize that voltages positively dangerous to human life are being handled within these units. Caution should be observed to prevent accidents. Contact with the high-voltage power supply would in all probability result in death. An interlock is a safety device for protection against personal injury and should always be regarded as such.

Condensers in d-c. circuits are arranged so that they are automatically drained of their charges when voltage is removed from them. Always remember, however, that it takes a few seconds for the high-voltage generators to come to rest and that their generated voltages come to zero slowly. Always notice before making circuit adjustments that these machines have come to rest before touching any part of the inside circuits.

Meter panel protective glass should never be left off during operation. Terminal board covers should also be in place when the set is in operation.

Never adjust zero reading of meters with power on as in many cases the meter potentials from ground greatly exceed the insulation of the zero adjustor. It is to be noted that all plate current meters are at full plate voltage from the ground. Hence the need for strict caution regarding zero adjusting and keeping meters covered with their glass panels.

Routine operation of the 1-B transmitter is not unlike that of any other type of transmitter. Careful maintenance which eliminates chances for breakdown at some inopportune moment is the best insurance for reliable uninterrupted program service. Before program time, it is always good policy to put the transmitter on the air for a few minutes, to allow a check on performance and still leave time for adjustment or tube replacement before the scheduled program starts. The station can, however, in emergency be put on the air in just a few seconds after pressing the "Start" button.

When changing vacuum tubes in any part of the set, a record should be kept of the period of service. Actual hours of life can be computed from the station log sheets.

Vacuum tubes of all types used in the transmitter should be mounted in a rack enclosed in a wooden structure or in any other safe place where they will be instantly available in case of need. For replacement of any air-cooled tube, the set need not be off the air for more than a few seconds. Replacement of the water-cooled tube has been made easy by equipping the jacket with a tilting device, by means of which the top of the tube may be pulled forward to facilitate its removal through the front panel. The length of time required to change tubes depends to a large extent on the skill of the operator.

Broadcasting stations are still a great attraction to the layman, and usually have an endless succession of visitors. The appearance of the station is, therefore, very important. All panels may be occasionally rubbed down with a thin oil-dampened cloth. Brass parts, such as buses to transmission line, water piping, etc., may be polished occa-

sionally. For this purpose, Noxon cleaner is strongly recommended because its application is not a tedious one. After polishing, the luster may be preserved by wiping the polished surfaces with a cloth slightly moistened with whale oil.

TYPE 50-B 50,000-WATT BROADCAST TRANSMITTER

Rating.—The RCA Broadcast Transmitter, Type 50-B, has a nominal output rating of 50 kilowatts. It must be explained that this rating is in accordance with conventional form where no account is taken of the degree of modulation. This is the transmitter output on unmodulated carrier frequency only. When a carrier frequency is modulated completely, or 100 per cent, the peak output must reach 200 kilowatts. Therefore, tube capacity is provided for an output of 200 kilowatts.

Frequency Range.—The equipment can be adjusted for maximum performance and efficiency for any frequency between 550 and 1500 kc. Crystals are supplied for one frequency only and a change of frequency necessitates a change of crystals.

Power Supply.—The entire equipment has been designed to operate from a primary source or power of 2300 volts, 60 cycles, 3 phase, 3 wire. The maximum allowable variations in primary line voltage are plus or minus 5 per cent of mean value of 2300 volts. Variations of greater magnitude than this require some form of voltage regulating equipment.

Vacuum Tubes.—The vacuum tubes for this transmitter includes the following types and quantities:

4 UX-210	2 UV-203-A	3 UV-217-C
4 UX-865	2 UV-863	10 UX-866
1 UX-860	2 UV-862	
3 UV-849	6 UV-857	

The position of these various types of vacuum tubes in the general scheme of the transmitter is shown in Fig. 490.

Type of Circuit.—A schematic diagram of the transmitter is shown in Fig. 491. The carrier frequency is generated by a crystal-controlled master oscillator, amplified by six successive stages of radio-frequency power amplification and delivered to the antenna through a transmission line. Audio-frequency input passes through two stages of amplification to the modulator circuits. The radio-frequency carrier is modulated in the fourth stage of amplification, the succeeding two power amplifiers operating as linear balanced amplifiers. The power circuits for operating the radio system are arranged for various methods of control: namely manual, semi-automatic or full automatic. Water flow actuated devices, temperature indicators, gradual filament voltage

application to filaments, automatic surge overload protection with automatic reset, automatic voltage regulation in the power rectifier with optional manual motor or manual hand operation, rectifier control from several positions, visual control indicators, and timed sustained water flow after the removal of power are some of the features of the control system.

Frequency Control.—Refined practical methods of carrier frequency control have been utilized in this transmitter, which will maintain the requisite frequency stability. Means are provided for maintaining the frequency of this transmitter accurate to within a few cycles of assignment over long periods of time, and where corrections

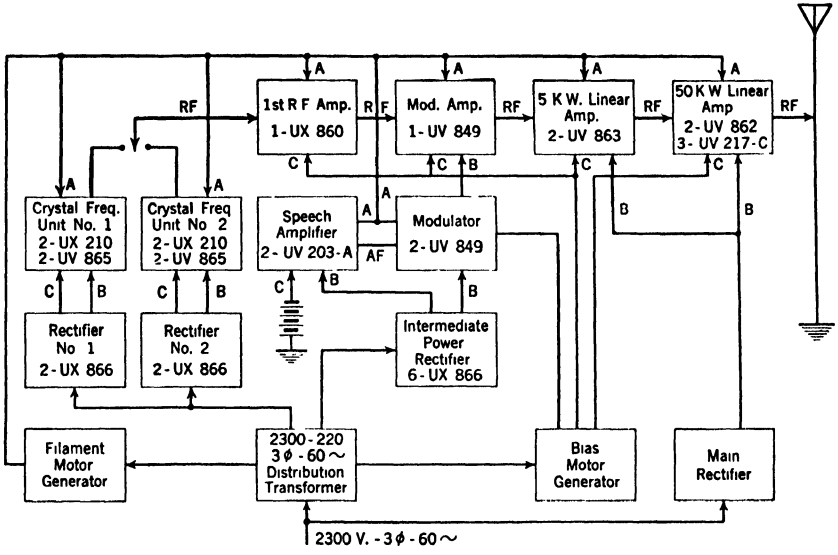

FIG. 490.—Arrangement of tubes and power circuits of the RCA 50-kw. broadcast transmitter.

are necessary they can be made by temperature-compensation methods. A crystal-controlled master oscillator and two buffer amplifiers are built into a compact and complete unit with essential meters and controls in view and accessible. (See Figs. 492 and 493.) To insure permanent and reliable adjustment, the internal parts of the unit are completely enclosed in metal shields. The tubes can be readily removed and inserted. Two such units with individual plate and bias supply rectifiers, and transfer switches, are provided in each transmitter.

Method of Power Control.—The incoming power line is divided into two branches: (1) 100 kilovolt-ampere circuit for motor-generator, control, and auxiliary power; (2) 258 kilovolt-ampere transformer capacity

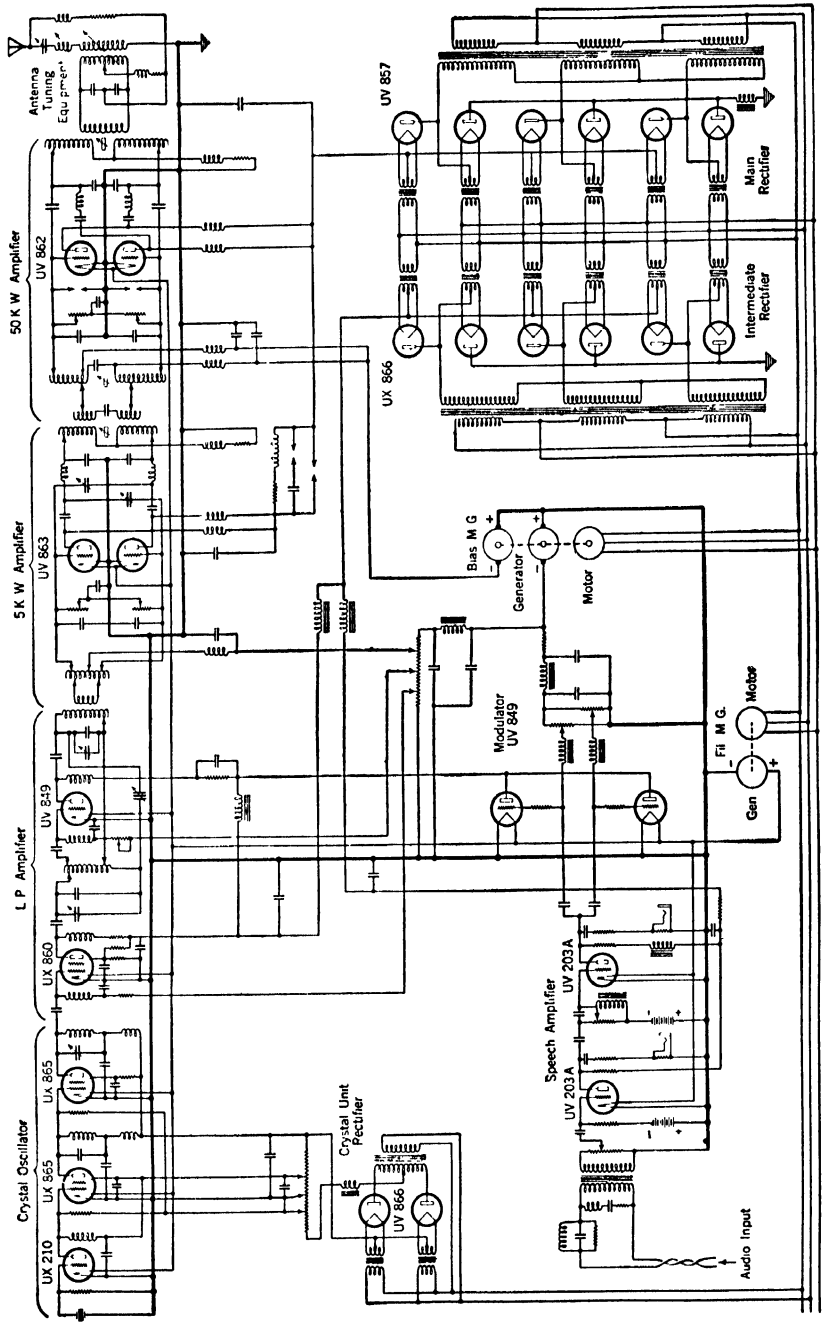

FIG. 491.—Schematic diagram of the RCA 50-kw. broadcast transmitter.

for the main rectifier. The actual power consumed from the primary power line, when the transmitter is in full operation, is about 230 kilowatts at 86 per cent power factor. There is no particular need for accurate voltage regulation in the distribution circuit except for the rectifier filaments, and here a manually operated rheostat is provided.

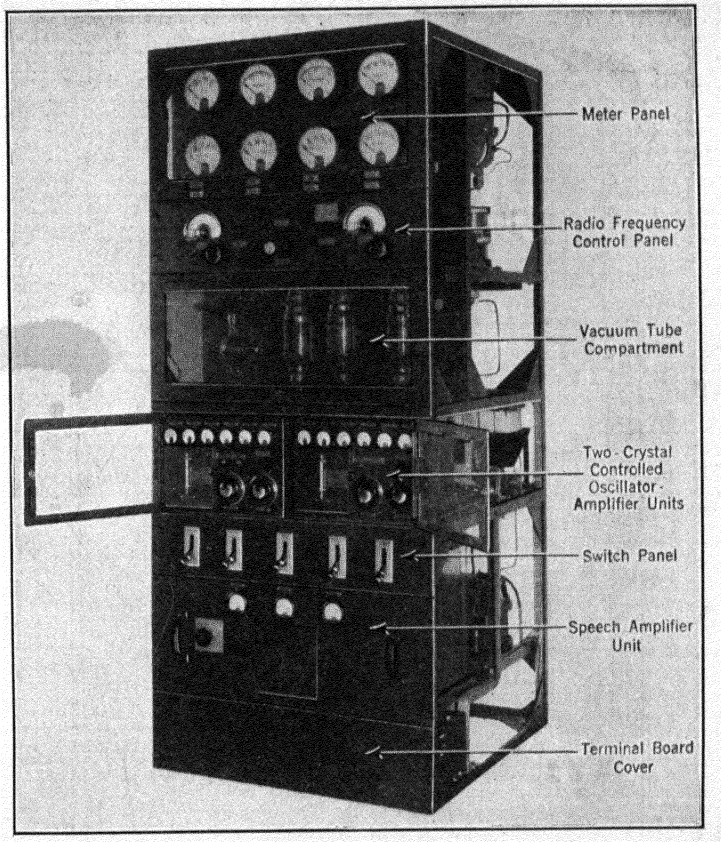

FIG. 492.—Frequency control panel of the RCA 50-kw. broadcast transmitter.

Power for the main rectifier circuit is controlled by two methods: (1) automatic induction voltage regulation, (2) step starting with resistance. When starting the rectifier and amplifiers it is important that power be applied to the plates at reduced voltage and increased gradually. This is done by first applying the power through a resistance in the a-c. line which, after an interval of time, is shorted out. Meanwhile the induction voltage regulator is increasing the voltage, and full voltage is obtained from the rectifier in approximately six seconds.

The induction voltage regulator can also be operated manually from a control switch which reverses the motor as desired or by means of a crank on the regulator.

The power rectifier can be switched on or off from three positions, namely, the control panel, the 50-kilowatt amplifier, and the operator's

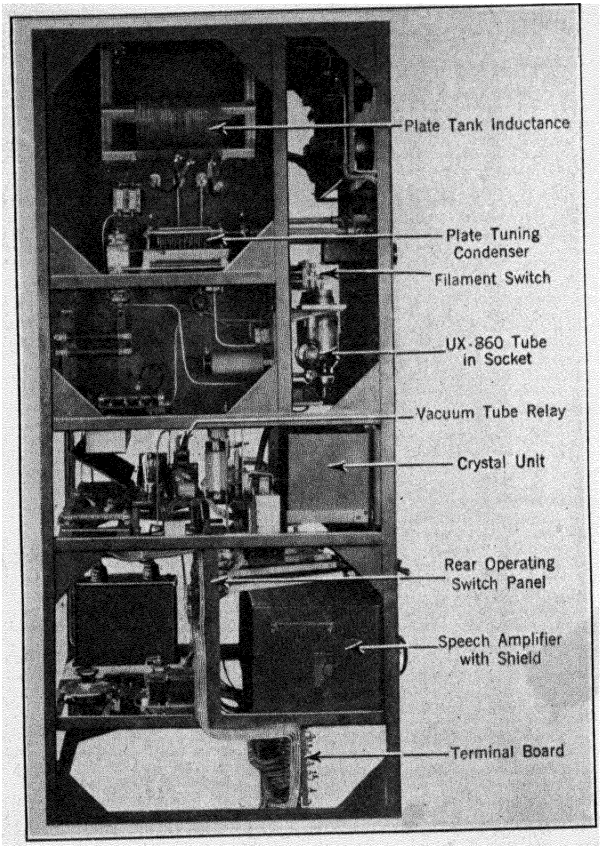

FIG. 493.—Left-hand side view of the frequency control panel of the RCA 50-kw. broadcast transmitter.

control unit. Right- and left-hand views of the power and rectifier control apparatus are shown in Figs. 494 and 495.

Protective Devices.—The various devices used with the transmitter for safety of operating personnel and protection of the apparatus, include the following:

Water flow relays that prevent damage due to water failure.
Water temperature indicating thermometers.

Filament no-voltage protection on both d-c. and a-c. tube filaments.
Bias no-voltage relays.
Timed filament voltage build-up.
Step starting for the power rectifier.
Overload release on circuit breakers for both branches of power circuit.

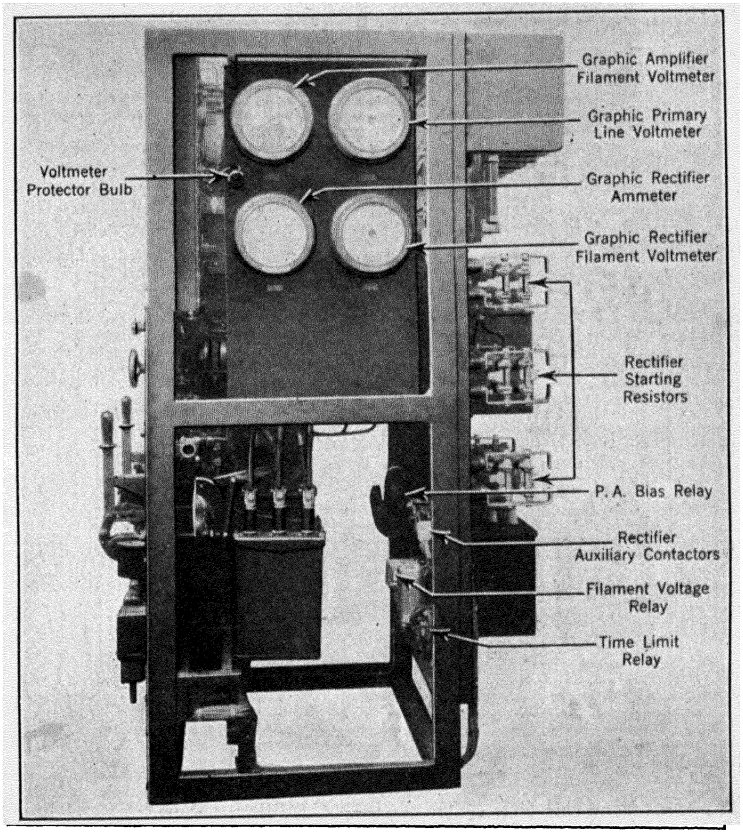

FIG. 494.—Right-hand side view of the power and rectifier control apparatus for the RCA 50-kw. broadcast transmitter.

Power rectifier surge overload relay with automatic reset.
Power rectifier sustained overload trip.
Intermediate rectifier overload trip.
Sequence interlocks that protect each successive operation in either starting or stopping.
Thermal overload relays in each motor starter circuit.

Fuses in all branch circuits.

Disconnect switches in high-voltage circuits.

Filament burnout relay on the 5-kilowatt amplifier that removes plate power when circuit unbalance is caused by tube failure, and removes filament voltage where both tubes take their filament current through a resistance.

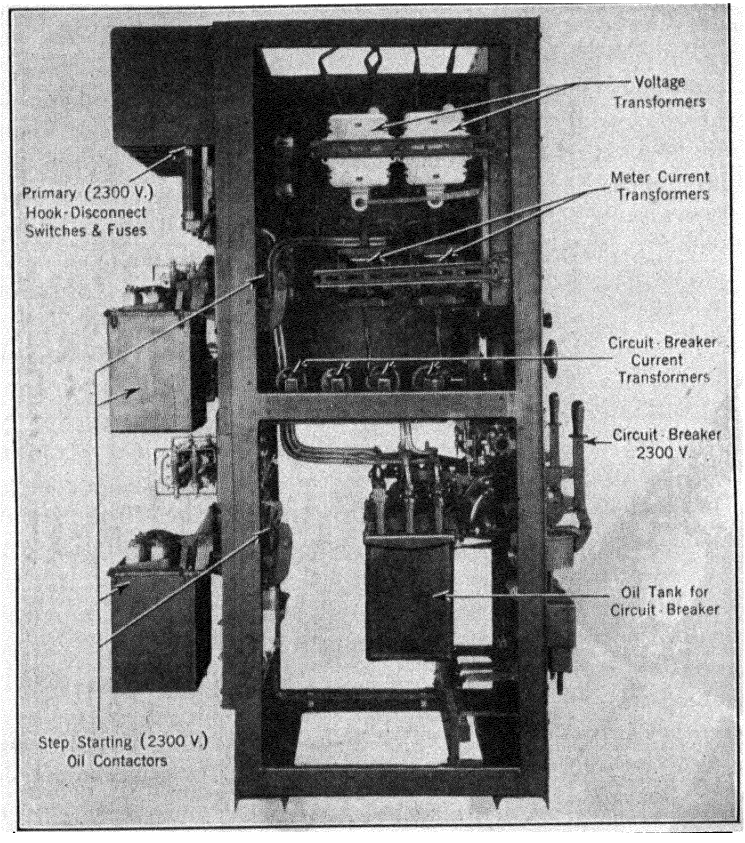

FIG. 495.—Left-hand side view of the power and rectifier control apparatus for the RCA 50-kw. broadcast transmitter.

Switches on all doors that remove bias and plate voltages, thus protecting the personnel from accidental contact with high voltages.

Timed water flow after removal of power tubes to assure complete cooling.

Automatic drain of cooling water to prevent freezing in cold weather.

Visual indicators as a guide to all important circuit conditions.

Antenna Coupling.—A two-wire transmission line is used for coupling the antenna to the power amplifier, as described in the section on the 1-B transmitter. This provides an efficient method of coupling when the antenna system is at some distance from the power apparatus. The transmission line is a high impedance circuit and the losses in it are low. When it is properly balanced to ground, radiation from it is negligible.

Audio Characteristics.—From the input to the high power audio speech amplifier to the modulated power transmitted from the antenna, this transmitter has an audio-frequency characteristic substantially flat, when a constant voltage input to the speech amplifiers at frequencies from 30 to 10,000 cycles is used for measurements.

Modulation.—This transmitting apparatus employs what is known as a "low level" modulation system. This is in contrast with the "high level" system in which the audio currents are amplified to sufficient power to modulate the output amplifier by the constant current method. In a low level modulation system the audio circuits are very simple. The radio-frequency system is modulated at a point somewhere in the low power stages where 100 per cent modulation can be obtained without objectionable power loss.

The 100 per cent modulation system has a great many advantages over the older practice of 30 to 50 per cent modulation, since the peak output in the former case reaches 400 per cent of carrier output, whereas the peak output for 50 per cent would be but 225 per cent of carrier output. The average output from a 100 per cent modulated transmitter is greater than the average output for lower percentages. This increased output of power into the antenna gives a greater range of usefulness to the station, a greater area of coverage, and a greater ratio of signal to interference level.

Mercury-Vapor Rectifiers.—This transmitter uses mercury-vapor hot-cathode high-voltage rectifier tubes. These tubes are much less expensive than their equivalent rated high vacuum rectifiers, and are much more efficient. Two low power rectifiers which supply plate and bias for the crystal oscillator-amplifier units are used also. These are single-phase full-wave rectifiers, with maximum output of 600 volts. There is also a three-phase full-wave 3000-volt rectifier producing plate power for the low power radio stages, the modulators and the speech amplifiers; also a three-phase full-wave rectifier (power rectifier) producing from 10,000 to 20,000 volts for the plates of the linear amplifiers.

(*a*) The two three-phase full-wave rectifiers are connected in such a way as to obtain a series arrangement of tubes on each phase. By this method, the rectifier plate transformer voltage can be much less

than with the so-called six-phase or three-phase double Y connection.

(*b*) Another important advantage of mercury-vapor rectifiers is their stability of voltage regulation. The internal resistance of the tubes is so low that the voltage drop is negligible over a wide range of load currents. (Refer to Fig. 490 for the various types of tubes used; also the transmitting tube characteristic chart in the Appendix.)

Cooling System.—There are four vacuum tubes which require water cooling. Approximately 50 gallons of water per minute circulate through the system, propelled by a motor-driven centrifugal pump. When not in use, the water flows back into a 300-gallon storage tank, and all parts of the equipment are drained. When the pump starts, water is forced through the pipes, cooling radiators, water hoses and tube jackets, and returns to the drain tank. In normal operation, the water system must carry off the heat produced by the dissipation of slightly over 100 kilowatts of power.

The hot water passes through the cooling radiator where the heat is removed from the water and blown or radiated into free air. The radiator and its centrifugal blower is located out of doors at the rear of the building. The blower forces air through the radiator pipes at the rate of approximately 15,000 cu. ft. per minute. The heat of the exhaust water from each linear power amplifier unit can be observed by the indicating dial thermometers.

LOW POWER RECTIFIER AND AUTOMATIC CONTROL UNIT ("A" PANEL) OF MODEL 50-B TRANSMITTER

Description.—Front, rear and side views of this unit are shown in Figs. 496, 497 and 498. The panel contains three individual mercury vapor rectifiers, various contactors and relays associated with the control circuits, and condensers and reactors associated with the oscillator-modulator-amplifier panel. The filament voltmeter is calibrated to read voltage on the primary side of the filament transformers. A voltmeter transfer switch (Fig. 496) transfers the filament voltmeter to any one of the three rectifier filament circuits. A heavy duty snap switch, located behind the tube door between the crystal unit supply rectifier tubes, disconnects the filament primary voltage.

The mercury-vapor rectifier tubes are arranged according to the circuit in which they operate. Along the lower part of the tube compartment are six UX-866 tubes. They operate in a three-phase, full-wave, series-arranged rectifier circuit so as to produce approximately 3000 volts. This is known as the intermediate rectifier. The power

thus obtained is thoroughly filtered and is used for plate power for the modulated amplifier, the speech amplifiers and modulators. Immediately above the intermediate rectifier tubes are two groups of two UX-866 tubes which act as single-phase, full-wave rectifiers supplying plate power to the individual crystal oscillator units. The output voltage is

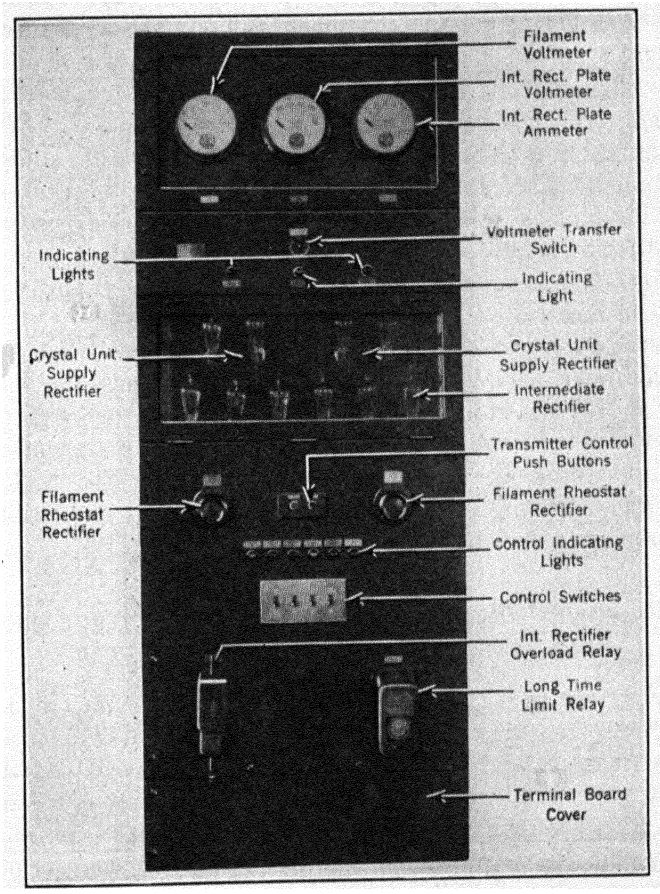

FIG. 496.—Front view of the low-power rectifier and automatic control unit of the 50-kw. transmitter.

applied across a voltage divider with a ground point located near the negative end. With this arrangement, various taps are taken to supply bias plate voltage for the crystal oscillator, and for the two screen-grid buffer amplifiers in the crystal unit.

The narrow panel above the tube compartment contains the voltmeter transfer switch already mentioned, and three red indicator lights.

The indicator lights, directly above each crystal unit rectifier, indicate which of these rectifiers is in use. The middle indicating lamp functions in the control circuit and will be mentioned later.

Below the tube compartment on the main panel are two rheostats, used to regulate filament voltage for the crystal rectifier filaments. Between these rheostats are two push-buttons which start and stop the entire station when the control circuit is arranged for automatic

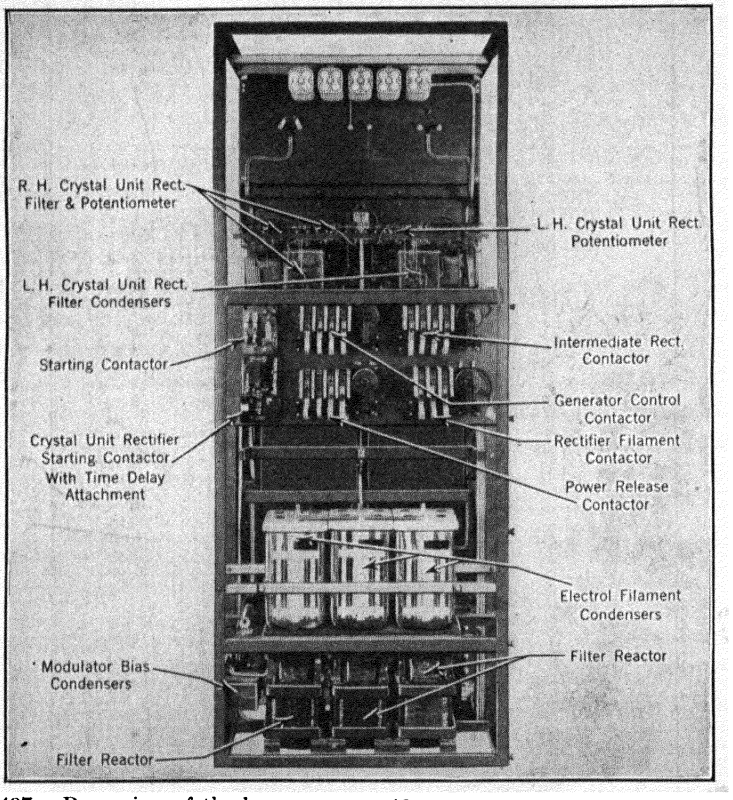

FIG. 497.—Rear view of the low-power rectifier and automatic control unit of the 50-kw. transmitter.

control. When manual control is used, these buttons start and stop the cooling system. On this panel there are six red and green indicating lamps, four control snap switches, an overload relay for the intermediate rectifier, and a long-time limit relay used to time the operation of the cooling system for the entire transmitter after power has been removed.

The terminal board for the " A " panel is located at the bottom of the unit 10 in. to the rear of the front panel. It is made accessible by

removing the narrow section of the front panel which is retained in place by four cap screws. The tube compartment is accessible through a door which opens downward. This is interlocked in such a way that

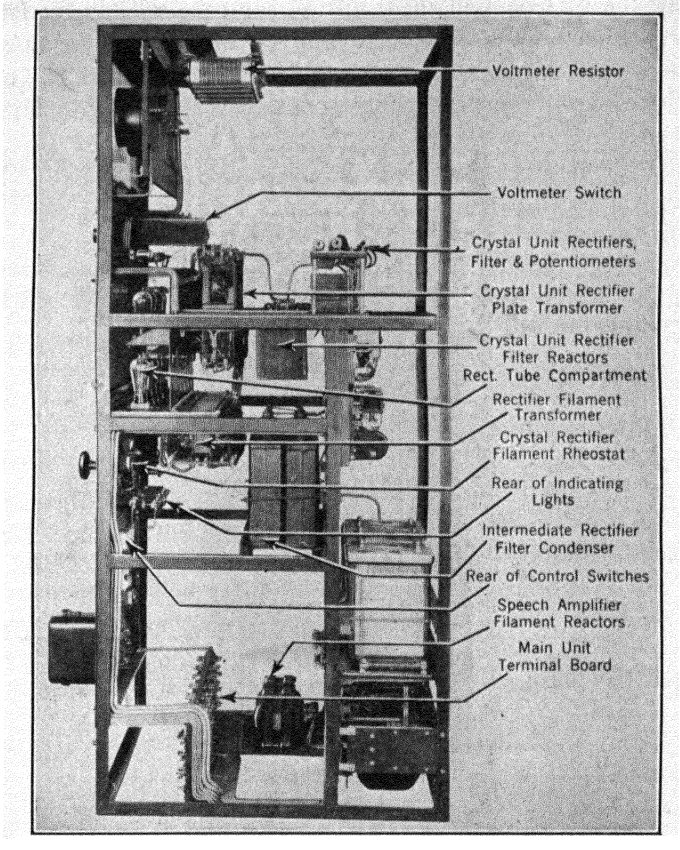

FIG. 498.—Right-hand side view of the low-power rectifier and automatic control unit of the 50-kw. broadcast transmitter.

immediately upon opening the door all dangerous voltages are automatically removed from the entire transmitter.

EXCITER-MODULATOR UNIT ("B" PANEL) OF THE MODEL 50-B TRANSMITTER

Purpose.—This panel, a rear view of which is shown in Fig. 499, performs the following functions:

1. Produces a constant frequency by means of a crystal-controlled oscillator.

2. Amplifies this carrier frequency to a power level sufficient to excite the succeeding 5 kilowatt amplifier.
3. Receives low-level audio energy from the incoming audio line and amplifies this to a level sufficient to modulate the radio-frequency system 100 per cent.

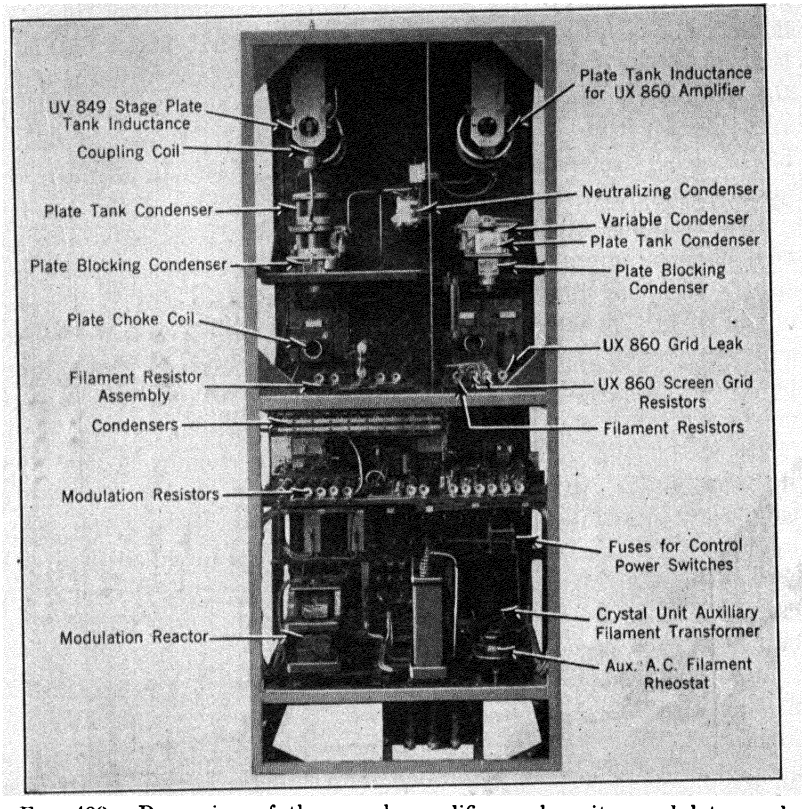

FIG. 499.—Rear view of the speech amplifier and exciter-modulator and crystal-controlled amplifier of the 50-kw. transmitter.

Crystal Oscillators.—Two complete crystal oscillator units are mounted side by side behind glass-front doors, with connections arranged so that either of them may be used at will. These units and the ones discussed in the previous section on the 1-B transmitter are identical.

Radio-Frequency Power Amplifier.—The "B" panel contains two stages of radio-frequency amplification. The first is a straight radio-frequency amplifier employing a UX-860 screen-grid tube. This stage receives its excitation directly from the crystal unit and delivers its

output from the tuned plate circuit into the grid of a UV-849 tube used as an amplifier. This latter amplifier has a nominal output of 150 to 250 watts with a steady plate voltage of 2000 volts. This stage is known as the modulated power amplifier since its output is modulated by the audio voltages received from the speech amplifier and the modulators. The plate circuit is tuned, and the output from this stage is inductively coupled into the 5-kilowatt amplifier shown in Fig. 500. Both radio-frequency amplifiers are equipped with plate ammeters, and the modulated amplifier also has a grid ammeter. An analysis of the audio circuit is given in the following paragraphs because at this point in the general arrangement of the transmitter circuit, the carrier frequency is modulated by the audio-frequency currents.

Audio Input.—The audio-frequency output from the station audio control room enters the transmitter through the speech amplifier. The speech amplifier unit is a complete assembly located in the lower part of the "B" panel. It contains two stages of resistance coupled, audio-frequency amplification, using UV-203A tubes at 1000 volts plate potential. Incoming signals go through a step-up transformer shunted on the secondary side with a gain control before reaching the grid circuit of the first amplifier. The speech amplifier has sufficient gain so that with an audio input level of −10 db it will excite two UV-849 tubes connected in parallel as modulators sufficiently to give 100 per cent modulation of the modulated amplifier stage. Individual plate meters and a common filament voltmeter are provided. Each stage can be carefully checked for quality by means of listening jacks located in the output of each stage.

Speech Amplifier Unit.—The speech amplifier unit is provided with flexible connections so that it can be made entirely accessible by its withdrawal from the frame. The two amplifier tubes are normally accessible for replacement through a door in the middle of the speech amplifier panel.

Modulators.—The two modulators in parallel receive their excitation from the speech amplifier. The bias voltage can be separately regulated for each tube by means of potentiometers. Bias should be so adjusted that the plate current for each tube is the same. With 3000-volts on the plate this should be approximately 0.100 ampere per tube. Each modulator tube has a grid and plate current meter.

The modulated amplifier is modulated by the constant current or Heising system, with the exception of a modification which increases the usual percentage of modulation obtained in the common arrangement of this circuit. The plate voltage applied to the modulator tube is approximately 3000 volts, and the modulators are excited sufficiently

to produce a peak reactive voltage across the modulation reactor of approximately 2000 volts maximum when the input to the speech amplifier is at its normal level. In order to obtain plate modulation, the modulated amplifier and the modulators have a common supply voltage. For 100 per cent modulation, it is necessary to reduce the voltage on the amplifier from 3000 to 2000 volts by means of a resistance. A large condenser of low reactance to all audio frequencies is shunted around the resistance. The audio voltages delivered by the modulators are admitted to the plate of the modulated amplifier, without appreciable drop, through the condenser leg of the circuit. One hundred per cent modulation is therefore accomplished by delivering a peak audio voltage of exactly the same amplitude as the applied direct voltage.

Output.—The modulated radio-frequency output from the modulated-amplifier is wired to the input of the 5-kilowatt amplifier through a coupling coil and short transmission line.

Crystal Unit Transfer Switch.—The middle switch on the switching panel beneath the crystal unit doors is used to change from one crystal unit to another as indicated on the name plate. Each crystal unit works with its individual plate and bias supply rectifier. Therefore, rectifiers are automatically changed when crystal units are switched. In case of failure of a vacuum tube, or a crystal, or abnormal frequency drift due to any unusual cause, the second unit waiting in readiness can be switched into the circuit, with but a brief interruption in output, by manipulating the crystal unit transfer switch.

Removing Speech Amplifier from Panel.—The design of the speech amplifier provides means for sliding the entire unit forward from the panel where it is fully accessible for testing, changing bias batteries or servicing. The terminal board connections are flexible and of suitable length to allow withdrawing the unit without disconnecting the leads. The unit is interlocked to assure the removal of high voltage when the tube compartment door is open. When the voltage is applied with the unit withdrawn no protection from the 1500 volts direct current is available and extreme care in handling is recommended. The shield of the unit is readily removed after the unit is withdrawn.

Listening Jacks.—For monitoring purposes, a listening jack is associated with the output of each stage into which a pair of high impedance telephones are inserted. In parallel with the second listening jack is a wire running to the audio input apparatus in the control room for monitoring the input to the modulators.

Filament Supply for the Exciter-Modulator Unit.—The filaments are operated directly from the main filament bus, through a filter composed of a condenser and reactor. Each speech amplifier tube has an indi-

vidual filament filter reactor and condenser. Most of the drop in filament voltage from 32 or 33 volts, to 10 volts, is obtained in the reactors, but variable resistors are provided for final adjusting to the specified voltage.

Plate Supply.—Plate power is derived from the intermediate rectifier through series resistors. The plate resistors drop this voltage to 1000 volts, applied at the plates of the UV-203A tubes.

5-KILOWATT AMPLIFIER ("C" PANEL) OF MODEL 50-B TRANSMITTER

Assembly and Parts.—The assembly of this panel and the principal parts are shown in Fig. 500. The parts associated with the 5-kilowatt amplifier are:

(*a*) 5-kilowatt amplifier.
(*b*) Plate voltage hook disconnect switch.
(*c*) Plate voltage reducer unit.
(*d*) Filament filter reactor.

Water Cooling.—Water is fed to the unit by a 2-in. pipe in parallel with that supplying water to the 50-kilowatt amplifier. The water system reduces to $\frac{3}{4}$ in. inside the unit. One valve in the input water line permits the water to be shut off from the front of the panel. Water interlocks are located in the outlet from each tube. A dial thermometer with external bulb indicates the temperature of the exhaust water from two tubes. Approximately 5 gallons of water per minute per tube are used. If more than this amount flows, it should be reduced to normal value by means of the valve on the front panel.

Filament Voltage.—This is taken from the 32-volt bus through a filter reactor and resistor, which is usually located in the basement and which filters the filament supply and drops the voltage from 32 to 22 volts. The reactor, the resistor mounted on the reactor, the filament bus and the burnout relay resistors together must give a drop of 10 volts. The voltage required at the tube filaments is 22 volts. Small adjustments are made by means of taps on the reactor-resistor.

The filament voltmeter indicates filament e.m.f. A filament disconnect switch is mounted behind the door in the upper right-hand side of the tube compartment.

Filament Burnout Relay.—The filament burnout relay is a differentially wound relay, so connected that the two magnetic fields are balanced against each other when both coils are energized, with a resultant force of zero on the plunger tripping device. When the current through one side of the relay fails, the remaining field is enough

to operate the plunger, opening a pair of contacts. The normal potential required across each coil for proper operation of the relay is 1.5 volts. In this type 50-B broadcast transmitter the filament burnout relay is energized by taking the required drop across a resistance inserted in the filament bus for that purpose. When a tube filament fails, the current becomes zero, at least momentarily, and the current through one side

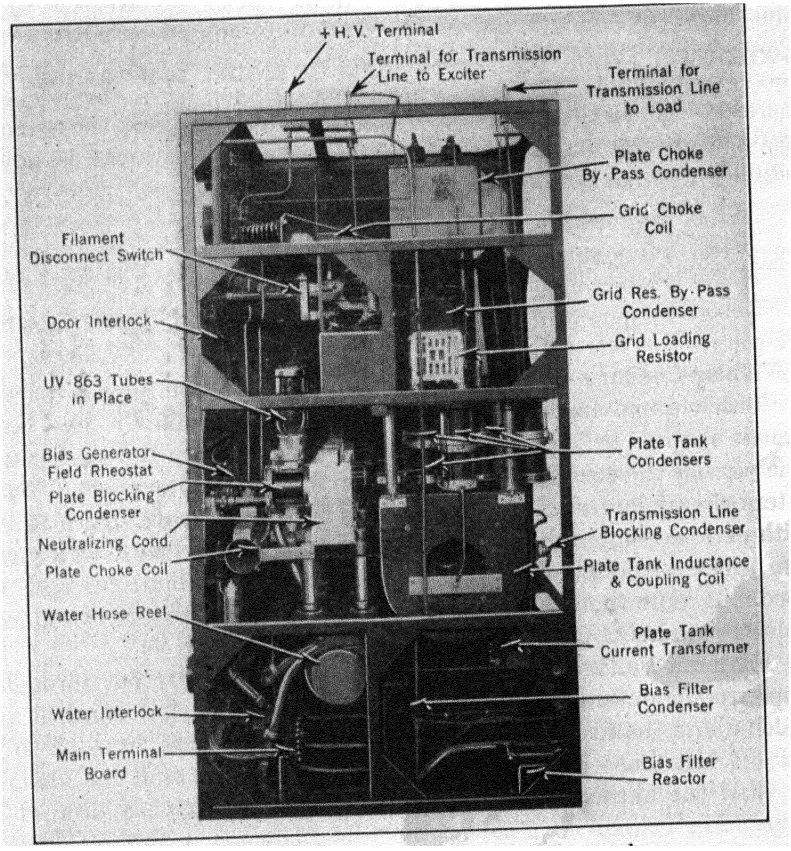

FIG. 500.—End view of a 5-kw. amplifier panel.

of the relay stops. The relay is actuated by the other coil. After once opening, the contacts open the power circuits. The relay must be manually reset.

When one tube fails, the filament voltage for the remaining tube will rise from 22 to 27 volts, which is likely to be injurious to the tube. The filament burnout relay is, therefore, arranged to remove filament power in addition to other power.

Plate Supply.—Plate power is taken from the main power rectifier at 18,000 volts maximum through a plate disconnect switch, and reduced to approximately 15,000 volts by the plate voltage reducer. The normal load is about 18,000 watts total, including loss in the voltage reducer.

Plate Voltage Reducer Unit.—This unit is composed of resistors bypassed with a condenser assembly insulated from ground for 20,000 volts. It is connected to the high voltage bus on one side and to the plus high voltage terminal of the 5-kilowatt amplifier on the other. The total plate current for this stage in passing through the resistors produces a voltage drop, and the resistors are adjusted until the voltage delivered to the amplifier is approximately 15,000 volts. The condenser serves to maintain constant voltage when the plate current is varying at audio-frequency rates.

50-KILOWATT AMPLIFIER ("D" PANEL) OF MODEL 50-B TRANSMITTER

Description.—A front view of the 50-kilowatt amplifier panel is shown in Fig. 501. Figs. 502 and 503 show how the UV-862 water-cooled tube is mounted.

The output from the 5-kilowatt amplifier is fed into the tuned grid circuit of the "D" panel through a short transmission line. The grid tank circuit is so arranged that the voltage node in the inductance part of the circuit is floating. The grid tank condenser is arranged with two sections in series, the mid point of which is connected directly to ground. The grid tank condenser for each side of the circuit is composed of two condenser units, one of which is used for frequencies above 800 kc., and both are used in parallel for frequencies as low as 550 kc. Circuit tuning is accomplished in steps by clips on various turns of the inductance, in conjunction with a disc variometer for fine variations.

The grid load resistor is of the air-cooled type and so constructed that its value may be varied up to 600 ohms.

Bias voltage enters the amplifier through a filter circuit after which it branches to individual grid current meters for each tube. The grid tank inductance is split at the middle with a blocking condenser of low reactance, and individual bias voltages are fed to each tube through the grid tank inductance. This arrangement allows the use of individual grid current meters without complicating the grid circuit with the addition of the usual grid blocking condensers.

Grid tank current is indicated on a 0–25 ampere meter with an external thermocouple, the latter being connected across the secondary of a current transformer which is connected in the grid tank circuit.

Each tube has an individual filament supply bus which enters the

amplifier through a floor bushing directly from the filament motor-generator usually located in the basement of the building. The negative filament is connected to ground and is common to all grounds in the entire transmitter. The plus filament buses pass through filament disconnect switches, these being hand-operated, single-pole, single-

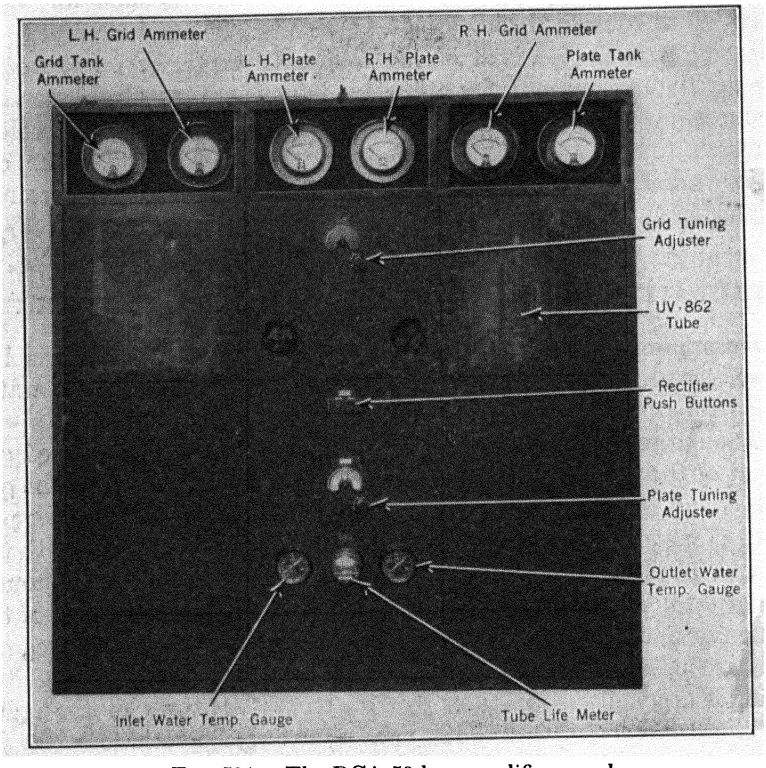

FIG. 501.—The RCA 50-kw. amplifier panel.

throw knife switches, one mounted on each side of the amplifier. Connection is made to the tube filament leads through terminals at the top of the tube compartment.

Filament and bias voltmeters are located on the power control panel where the voltage control rheostats are also located. Filament voltage is adjusted by means of a field rheostat and kept constant by means of an automatic voltage regulator. Bias voltage is varied by means of a generator field rheostat.

The plate tank circuit (see Fig. 504) is composed of a maple frame immediately back of the tube mounting frame and contains principally two large air condensers made up of 30-in. aluminum plates, a plate

tank tuning inductance with a transmission line and oscillograph rectifier coupling coil, an oscillograph rectifier for monitoring purposes, a radio-frequency current transformer, and a static drain circuit to remove static charges which might otherwise remain on the plate blocking condensers. Plate tank inductance is similar to the grid tank inductance, in that coarse variations in inductance are made by taps and fine varia-

1. Filament seal air hose.
2. Anode seal air hose.
3. Anode clamps.
4. Handwheel for tube ejector.

502. Grid tank condenser assembly.

507. UV-862 tube.

508. Neutralizing adjustment wheel.

509. Plate blocking condenser.

510. Plate tank condenser assembly.

511. Plate tank inductance antenna coupling coil assembly.

523. Filament switch.

539. Door (protective) interlock.

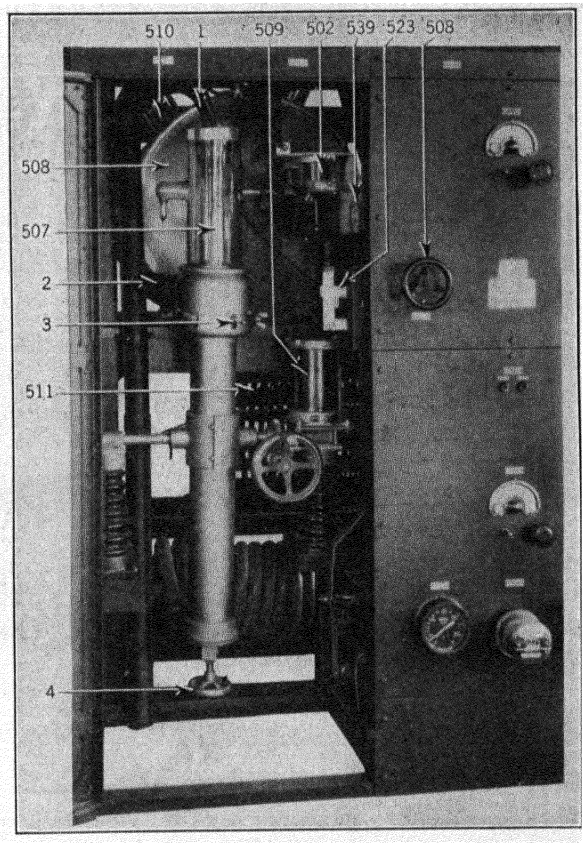

FIG. 502.—Showing how the UV-862 water-cooled tube is mounted in the 50-kw. amplifier panel.

tions are made by means of a disc variometer operated from the front panel directly through an extension shaft.

The neutralizing condenser for each tube is made up of a single 30-in. condenser plate mounted parallel with the plates of the plate tank condenser in such a way that it has adjustable dielectric distance controlled from the front of the panel. When neutralzing, a hand

wheel is inserted in the neutralizing adjustment on the front panel, and the movement of the plate made through sprockets and chain. The transmission line which supplies power to the antenna is coupled to the output circuit of the 50-kilowatt amplifier through a transmission line coupling coil, variable by means of taps. Terminals to the out-

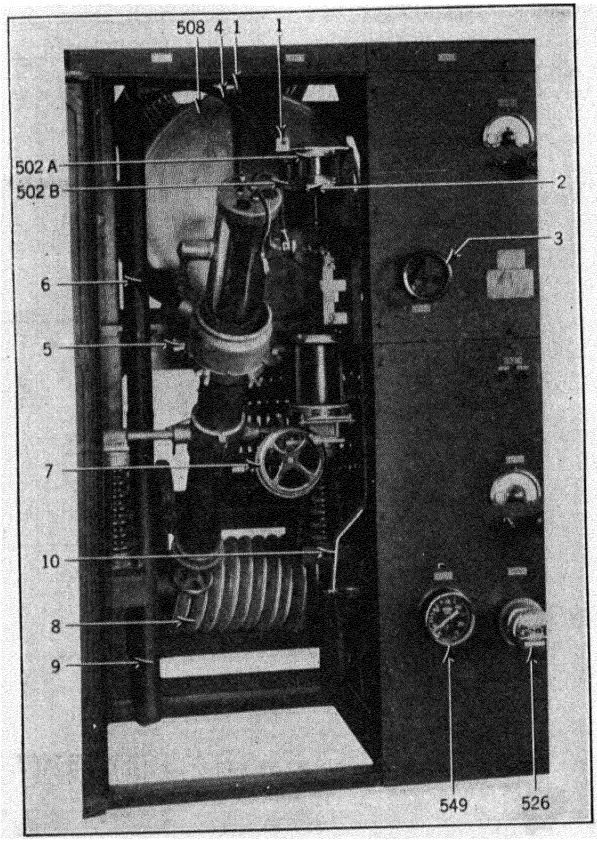

1. Filament terminals.
2. Grid terminal clamps.
3. Neutralizing hand wheel.
4. Filament seal air hose.
5. Anode clamps.
6. Anode air seal hose.
7. Hand wheel for tilting device.
8. Cooling water insulating hose seal.
9. Seal cooling air duct.
10. Positive filament bus.

502A. Grid tank condenser.

502B. Grid tank loading condenser.

508. Neutralizing condenser plate.

526. Tube life meter.

549. Indicating thermometer (water).

FIG. 503.—Another view showing how the UV-862 water-cooled tube is mounted in the 50-kw. amplifier panel.

going transmission line are located on the top, at the rear of the power amplifier tank unit.

The 50-kilowatt amplifier uses two UV-862 tubes which are accessible from the front of the panel, behind interlocked doors, one on each side of the mid panel. The tubes are mounted in such a way that all operations necessary for inserting or changing can be performed from the front of the amplifier. Ease of manipulation is afforded by the

tube jacket tilting device which swings the tube mounting outward to a position where the tube can be conveniently grasped and moved without danger of accidental collision with other parts of the apparatus. Each tube is equipped with individual water valves. These permit the water to be shut off from one tube while it continues to run through all other water-cooled tubes in the equipment. Water and air continue to flow for several minutes after power has been removed from the transmitter so that all tubes are thoroughly cooled before the cooling system is allowed to shut down. Individual water control therefore

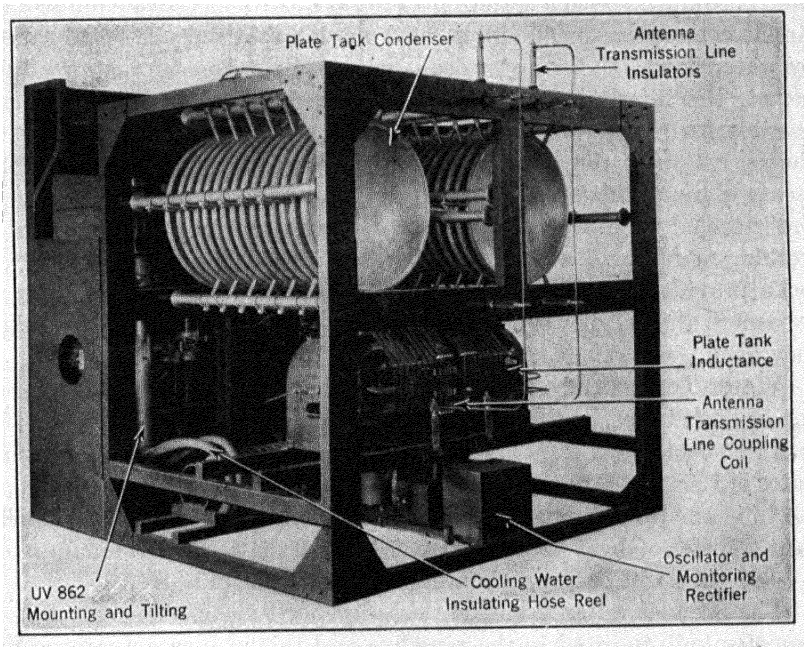

FIG. 504.—Showing the component units of the plate tank circuit of the 50-kw. amplifier.

allows work to be performed on one tube without interfering with the regular cooling of the others.

Grid Tank Tuning and Excitation Adjustment.—The grid tank circuit is tuned by means of a fixed tank condenser adjustable in two steps, by inductance taps, and by a disc variometer in the inductance. The tuning knobs and dials are the same for the entire set. Each can be accurately reset by scale divisions and each has a locking device.

Plate Tank Circuit Tuning and Adjustment.—Inductance.—The plate tank coil is located beneath the tank condensers. It is provided with a positive contact tapping arrangement and a vernier disc for fine

tuning. Around the outside of the coil is another coil used for transmission line coupling, and the pick-up coil inside is used to operate the monitoring rectifier. Between the two sections of the plate tank inductance the connection goes to the radio-frequency current transformer, which actuates the plate tank ammeter. The external thermocouple is mounted directly on the current transformer, the assembly being shielded against induction other than that due directly to the primary flux.

Water Flow Interlocks.—The exhaust water line for each UV-862 tube is equipped with a water flow interlock, with electrical contacts for circuit connections. The interlock is actuated by velocity head caused by water flow. If, for any reason, water cannot flow through the tube jacket, the interlock remains in the "open" position, and it is not possible for any power to be applied to the tube. Much depends on the operation of the water interlocks because the burning of the filaments alone without good circulation of cooling water will damage a water-cooled tube in a short time. Failure of water when the tube is working at full load will destroy it in a few seconds. The water interlocks provided are positive and rapid in their functions, and are so connected that all power is removed from the water-cooled tubes when they open.

Water Temperature Indicator and Interlock.—Abnormal heating of one or both tubes, or the circulation of too hot water, is also dangerous to water-cooled tubes. The maximum safe temperature for exhaust water is 160° F. Above this heat, the formation of steam bubbles near the tube anodes causes an abrupt rise in temperature because of inefficient transfer of heat to the water. The circulation of water for each UV-862 tube will be approximately 20 gallons per minute.

The exhaust water from the two amplifier tubes passes over a thermometer bulb inserted in the pipe line and this in turn actuates a dial indicating thermometer mounted on the front of the panel, permitting the operator to observe the condition of the exhaust water at all times. Abnormal temperature rise, due to excessive dissipation in one tube only, is readily noticeable by an increase in the indicated temperature.

The temperature is made to open an electrical contact to remove power from the transmitter when the temperature exceeds the maximum temperature. The thermometer contacts are interlocked with the protective circuit and made to remove all power from the tubes. The practice is to set the thermometer contact permanently at maximum safe water temperature of 160° F., allowing normal operating variations

below this value to go as they will. Any troubles which would cause excessive heating would be more readily indicated by the other meters on the amplifier, or the power may be shut off directly by the overload relays.

Door Interlocks.—Every door in the transmitter allowing access to back of panel apparatus is interlocked to remove high voltages. The opening of any door removes all power from the transmitter except filament volts and the 2300-volt alternating current line on the power control panel. This latter must be removed by pulling the main station power disconnect switches in the basement. For all operations of changing tubes in any part of the equipment, the removal of all but filament voltage provides complete safety to operating personnel. Pilot lights are provided to indicate power and circuit conditions.

Tube Hour Meter.—The tube hour meter on the 50-kilowatt amplifier panel operates on 220 volts alternating current and is connected to the driving motor of the filament motor-generator. The dials are calibrated to record hours of operation.

Monitoring Apparatus.— The motoring apparatus includes a rectifier for operating an oscillograph and loudspeaker. The small amount of power needed to run the oscillograph rectifier is obtained by inductive coupling to the plate tank inductance in the 50-kilowatt amplifier.

The rectifier is a complete unit in a shielded case, located at the rear of the plate tank unit. It uses one UV-217C rectifier tube for half-wave rectification. The filament of the tube is heated by direct current from the main filament bus, through a resistance. The radio-frequency pick-up is introduced across the plate and filament and the rectified current is made to pass through a relay, a potentiometer and the galvanometer of the oscillograph. When current passes through the relay it closes a pair of contacts which are wired through to a signal lamp in the audio-control room showing that the station is on the air. To prevent audio frequencies being choked by the inductance of the relay winding, it is shunted by a condenser of low reactance to audio frequencies. Across a portion of the potentiometer, voltage is taken to operate a monitoring loudspeaker in the radio apparatus room, or in the audio-control room. A volume indicator may be used on this circuit in some instances for a check on the outgoing level. The oscillograph furnished for monitoring the outgoing signal in conjunction with the rectifier is a single element ribbon vibrator and optical system for observing the audio amplitude and wave-form.

MAIN POWER RECTIFIER ("E" PANEL) OF MODEL 50-B TRANSMITTER

Protective Circuits.—An interlock on each door (Fig. 505) is in series with the main power interlock system used throughout the transmitter. When a rectifier door is opened, the bias, intermediate and high voltages are removed from the transmitter.

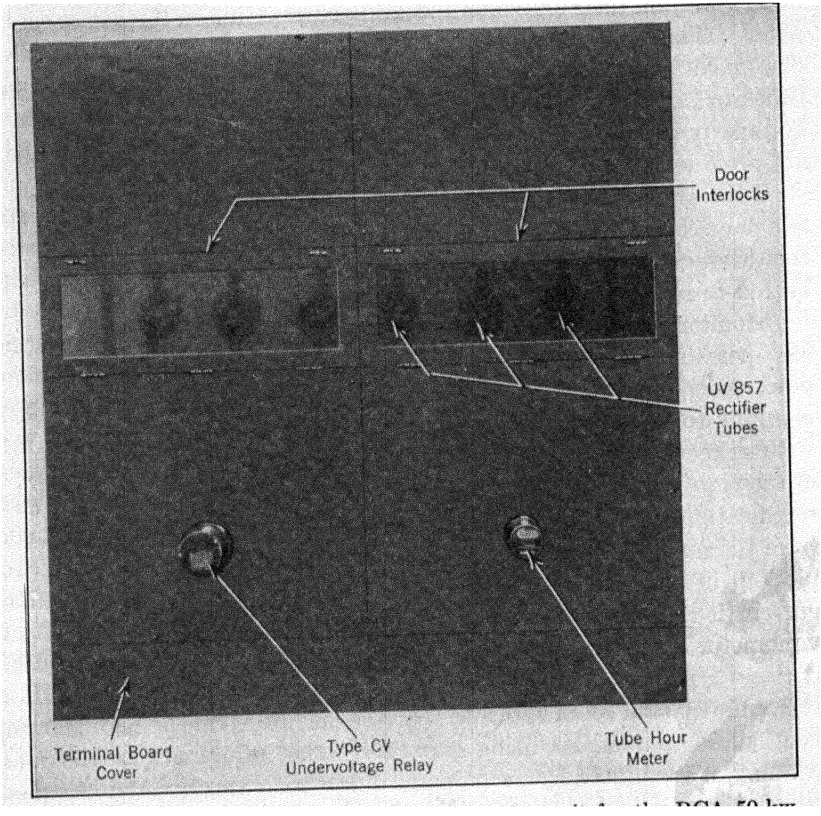

FIG. 505.—Front view of the main power rectifier unit for the RCA 50-kw. broadcast transmitter.

Condenser Bank.—On the load side of the filter reactor, a bank of 20,000-volt condensers (see Fig. 506) is connected across the high voltage circuit. Two additional similar condenser units are used in the 50-kilowatt amplifier for plate choke coil by-passes. In the event of failure of a unit by short-circuit the fuse is blown, and the arc is extinguished on the horn gaps with the simultaneous tripping of the surge overload relay. The overload relay will open the high voltage circuit and

therefore extinguish the arc even if it has not extinguished itself on the horns. When the surge overload relay again closes the high voltage circuits, the defective unit has been isolated and operation proceeds without further interruption. The unit that failed is identified directly by the blown fuse.

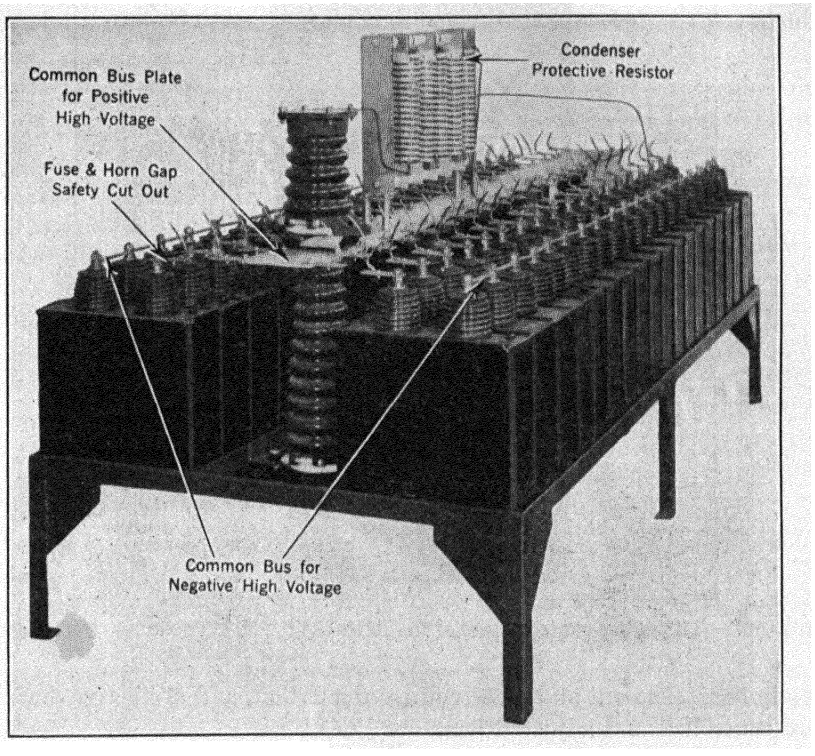

FIG. 506.—The bank of 20,000-volt condensers which is connected across the high-voltage circuit of the 50-kw. transmitter.

Filter Reactor.—The rectified output is filtered by means of an inductive reactor and a bank of high voltage condensers. The reactor is connected in the negative side of the rectifier high voltage delivery circuit.

POWER CONTROL PANEL ("F" PANEL) OF MODEL 50-B TRANSMITTER

The main power controls for the entire transmitter, including the 2300-volt primary circuit breakers, and special controls for the power circuits of the 5-kilowatt and 50-kilowatt amplifiers, and power rectifier, are located in this unit (see Fig. 507). Indicating and graphic metering

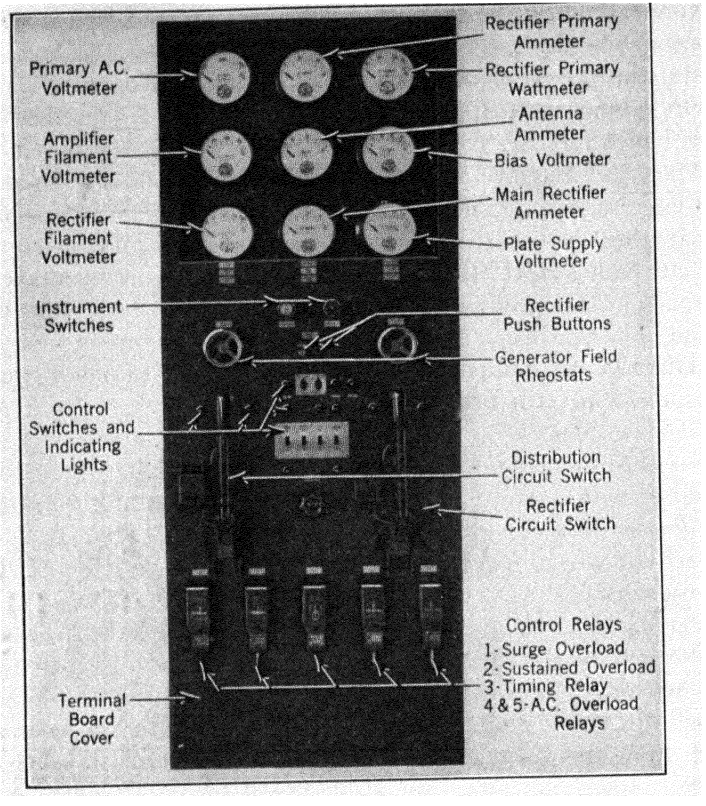

FIG. 507.—The power-control panel of the RCA Model 50-B broadcast transmitter.

equipment, filament and plate voltage regulation, and protective devices are controlled and adjusted here.

OPERATOR'S CONTROL UNIT

Remote control of some of the elementary functions of the transmitter is sometimes desirable. An Operator's Control Unit is furnished for mounting on the operator's desk by means of which he is able to start and stop the transmitter, and also to start and stop the main high voltage supply. The controls in this unit are but extensions of similar controls on the transmitter proper, so that their use is optional.

The following operations can be performed by the Operator's Control Unit.

(1) Start the transmitter.
(2) Stop the transmitter.

(3) Transfer the rectifier control from automatic to push-button control.
(4) Start the main rectifier.
(5) Stop the main rectifier.

When the rectifier is automatically controlled, the snap switch short-circuits the rectifier push-buttons. The snap switch is in series with another such switch located on the power control panel.

Note: All "Start" buttons performing the same operations from different locations are connected in parallel. All "Stop" buttons performing the same operations from different locations are in series.

Station Power Equipment.—The following items of power equipment are supplied with the type 50-B transmitter.

Filament Motor-Generator.—This is a three-unit assembly with a squirrel-cage induction-type driving motor, a 35-volt 600-ampere d-c. generator, with separate exciter unit, and two filament generators.

Filament Motor-Generator Transfer Switch Frame.—This includes the reduced voltage automatic starter, line switch and fuses for the filament motor-generator, and other totally enclosed double-throw switches for transferring starter, load and field controls to either motor-generator. In addition the automatic filament voltage regulator is here located. Both machines are connected up for duty at all times and selection can be made in a few moments by switching. Should it be necessary to switch from one machine to another during a program, the push-button on the voltage regulator can be depressed for hand control and the filament voltage regulated by hand until there is time to adjust the regulator for the second machine.

Bias Motor-Generator.—Two bias motor-generators are supplied. This unit is composed of an induction motor driving an exciter and two separate generators which are placed in one frame. Each bias generator has individual fields, controls, and commutators.

Bias Motor-Generator Transfer Switch Frame.—The automatic starter, line switch and fuses, transfer switches for load, and motor and fields are mounted on one frame from which either machine can be placed in operation by switching.

Automatic Induction Voltage Regulator.—The regulator is equipped with a panel of auxiliary and control devices for automatic, motor or manual control. This controls the input voltage to the main rectifier plate transformer, and therefore the rectifier output voltage.

Main Rectifier Plate Transformers.—Three single-phase plate transformers are included with the rectifier.

Distribution Transformer.—All low voltage for control and power

apparatus is obtained from a 100-kva. (kilovolt-ampere) 2300- to 230-volt three-phase distribution transformer.

Main Power Line Disconnect Switches.—Three 2500-volt 200-ampere hook disconnect switches are supplied; these are to be used to disconnect the power circuits from the incoming primary line.

Filament Filter Reactors.—Two filament filter reactors are included with the power apparatus. One is used in series with the 5-kilowatt amplifier filaments and the other in series with the low power radio-frequency amplifier filaments. These are located in the basement or any convenient position.

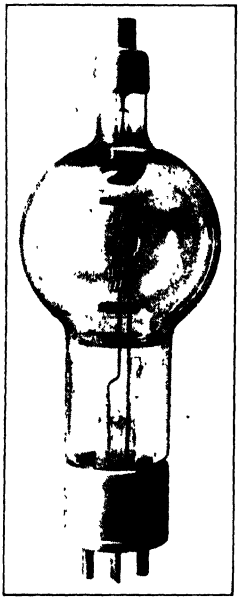

FIG. 508.—UV-869 transmitting tube.

Primary Power Circuits.—A 2300-volt three-phase power supply is required by the 50-B transmitter. The power for the transmitter is divided into two branches. The power line from the load side of the disconnect switches goes directly to the power control panel through floor bushings and is here divided into the distribution power circuit and rectifier power circuits.

Each circuit breaker is equipped with overload automatic tripping devices. These are operated by the current transformers in the power circuits. The over-current limits at which the breaker is to operate can be accurately adjusted. Each breaker has a red and a green light to indicate the setting—green when open and red when the circuit is closed. When the main station disconnects are open, both lights are out. These breakers require manual reset.

Power Metering.—The incoming line voltage is metered by an indicating instrument and a graphic recording instrument, both located in the control panel. They are calibrated with the potential transformers. The indicating instrument reads one phase at a time. It can be switched into each phase in turn by a three-position voltmeter switch. The graphic voltmeter is permanently connected in one phase. The 24-hour chart, calibrated in both volts and time, is useful as a check on the power company at all times. Off periods due to power failures are permanently recorded. In two of the three power lines to the main rectifier are current transformers which operate a single-phase ammeter, overload trip relays, and a three-phase indicating wattmeter. The ammeter can be switched to any phase with the three-position ammeter switch. The wattmeter is permanently connected in the three-phase

circuit, using the same current transformers as the ammeter and over-current trip relays, and the same potential transformers as the line voltmeters.

The over-current trip relays previously mentioned are calibrated relays set to open the rectifier power circuit when the line current exceeds a predetermined safe limit. The use of two relays is necessary to provide protection in case of overload in any one phase.

Distribution Transformer.—From one oil circuit breaker on the control panel marked " Distribution Circuit Switch " the 2300-volt line goes to the distribution transformer. This is a 100-kva., three-phase, 2300–230-volt step-down unit with delta-delta connections. The low voltage is used for auxiliary power for the motor-generators, intermediate rectifier, control circuit and all other low power circuits, including rectifier filaments.

No means are provided for regulating the low voltage since the only circuit where the voltage must be correctly maintained is the rectifier filament circuit and special regulating apparatus is provided there. Therefore, the low voltage regulation will be essentially the same as the primary line voltage regulation because, when the station is in operation, the load on the distribution transformer is quite constant.

Low Voltage Distribution Circuits.—The various branch circuits taking power from the 220-volt distribution circuit are listed below.

(*a*) 3 phase for automatic induction voltage regulator control circuit.
(*b*) 3 phase for radiator blower motor.
(*c*) 3 phase for pump and air blower motors for cooling system.
(*d*) 3 phase for bias motor-generator.
(*e*) 3 phase for filament motor-generator.
(*f*) 3 phase for all rectifier filaments.
(*g*) 1 phase for control contactors and relays.

Each branch circuit has a manually operated fused safety switch in accordance with underwriters' specifications. In general, these branch circuit switches are located near the apparatus which they control. This is considered more desirable than a centralized switching position because of greatly simplified station wiring, and because the apparatus affected is directly in sight when its switch is manipluated.

Rectifier Power Circuit.—Beside the " Distribution Circuit Switch " on the control panel is the " Rectifier Circuit Switch " from which 2300-volt power is transmitted through the step starting oil contactors on the rear of the control panel, down through the floor to the automatic induction voltage regulator.

The induction voltage regulator has a range of from $33\frac{1}{3}$ per cent buck to $33\frac{1}{3}$ per cent boost of mean 2300-volt line potential. The output from the regulator is applied to the primaries of the three single-phase rectifier plate transformers.

Power Control Apparatus.—The power apparatus is controlled from the power control panel, so far as is necessary for the routine operation of the transmitter. It includes all meters for the power circuits and the antenna ammeter, also circuit breakers with safety attachments, push-button for rectifier control, snap switches for manual power control, field rheostats, instrument switches, protective relays, control contactors, automatic induction voltage regulator control, indicating lamps, rectifier filament voltage regulator and associated apparatus.

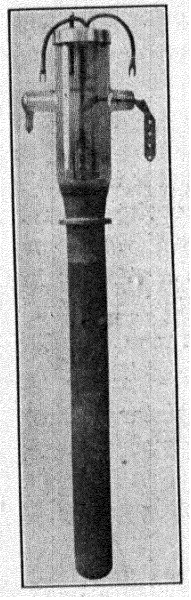

FIG. 509.—Type UV-862 water-cooled tube.

The power control unit and the low power rectifier and automatic control unit contain all the power control circuits for both automatic and manual control of the transmitter.

The "A" panel contains two crystal unit rectifiers, the intermediate rectifier, overload relay for the intermediate rectifier, filters for the three rectifiers, long-time limit relay, rectifier meters and instrument switch, indicating lamps, snap control switches and main start and stop push-buttons and control contactors.

Description and Function of Control Operations.—The control operations are indicated in their various steps by indicating or pilot lights. The proper relation between controls and lights can be determined by name plates, or by direct association of lights and controls such as used with the circuit breakers and induction regulator controls.

Filament Generator Field Rheostat.—The field rheostat is connected in the separately excited field and provides regulation of filament generator terminal voltage, when making tests without the automatic regulator. The voltage at the tube will be indicated on the voltmeter.

Filament Generator Automatic Voltage Regulator.—An automatic voltage regulator is used to control the main filament voltage of the filament generator. The regulator is a solenoid-operated device with the coil connected across the filament bus in series with proper resistors. The purpose of this regulator is to prevent filament voltage fluctuations due to heating or changes in speed.

Bias Generator Field Rheostat.—A rheostat controls the field of the bias generator for the 50-kilowatt amplifier from approximately 250 to 500 volts. It is so located that the bias voltmeter can be observed when making adjustments.

Surge Overload Relay.—This relay has the total current output of the main rectifier passing through its operating coil and is adjustable for a wide range of currents. It is quick opening and slow closing. The purpose of this relay is to provide protection from "bumps" or surges which might occur in the power line, or in the radio load, and has automatic reset with a short-time delay.

Sustained Overload Relay.—This relay is connected in series with the surge overload relay but has both slow opening and slow closing

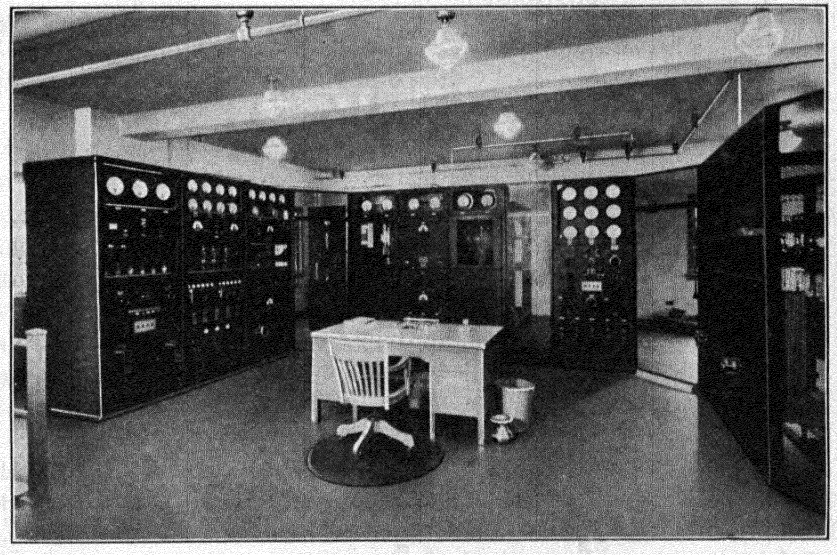

FIG. 510.—The operating room of WTAM, equipped with a typical 50-kw. broadcast installation.

features. Its purpose is to remove overloads of a steady value but of lower amplitude than the surge overload relay, hence, the relay is intended to go out when short impulses are passed which may have sufficiently high amplitude to be dangerous to the apparatus.

Timing Relay.—The timing relay is actuated by the control current through the water interlocks. When water first starts circulating and the water interlocks function, the water sometimes surges two or three times before becoming steady. This relay is slow closing so the filament

motor-generator will not start until the water has had time to become steady.

Overload Relays.—Primary line current relays together with current transformers guard against overloads in the primary line to the rectifier plate transformer. They are quick opening and quick closing but remain open as long as the overload persists. The connections take care of either single- or three-phase overloads. When they open, the contacts break the rectifier input circuit.

Protective Devices Exclusive of Control Circuits.—All line starters for motors are equipped with thermal overload relays for three-phase overload protection. The reduced voltage automatic starter for the filament motor-generator has an overload relay inside its cover. Filament burnout relays protect the UV-863 tubes from filament overload and prevent distorted speech transmission in case of failure of one tube in the linear amplifier circuit.

SPEECH INPUT EQUIPMENT

With every broadcast transmitter, there is required some type of equipment for the purposes of translating audio sounds into electrical energy. This energy in turn can be applied to a telephone line connected to the audio input of a transmitter which may be located at some remote point from the studio. Broadcast transmitters with power outputs greater than 2 kilowatts are usually located on the outskirts of towns or cities and studio facilities are provided at such points near the center of population so that they may conveniently be reached by the broadcasting artists.

The size of a studio installation depends somewhat upon the capacity of the transmitter and also upon whether the equipment is to be used to provide programs for other stations such as a chain system. A large number of 100-watt stations employ only a small battery-operated amplifier and one or two condenser microphones for studio equipment. Such a combination can be used either for picking up studio programs or for announcement purposes in conjunction with electrical transcription programs.

A studio installation used as a terminal for chain programs is usually quite an elaborate installation and may have as many as ten studios. The control room and switching equipment are quite large and complicated. The average broadcast station does not require as elaborate and complicated equipment as is normally used for the origin of chain programs and the RCA type D2 speech input equipment was designed to meet the requirements of average broadcast conditions.

A front view of the control room rack is shown in the photograph in Fig. 511, the numbered parts of which are identified as follows:

17-C—Equalizer Panel
15-A—Meter Panel
19-A—Extension Panel
33-A—Jack Panel
8-A—Magnetophone Panel
11-A—Microphone Control Panel
24-A—Monitoring Amplifier
18-B—Signal and Control Panel
13-A—Volume Indicator
12-A—Program Amplifier
28-A—Battery Control Panel
35-A—Equipment Shelf

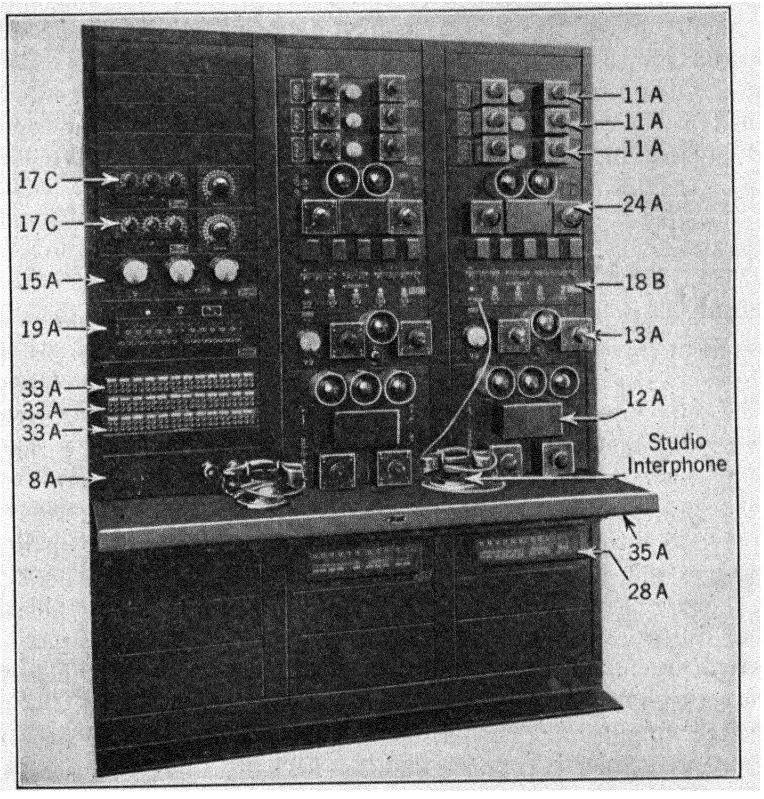

FIG. 511.—The control-room rack of a 50-kw. broadcast transmitter, which provides for a two-studio installation with three microphones in each studio. Provision is also made for handling adjunct or chain programs.

This equipment provides for a two-studio installation with three microphones in each studio. Provision is also made for handling adjunct or chain programs. This equipment is capable of handling two independent programs or it may provide one program and the other channel may be used for audition purposes. Each channel is complete

with its interphone and monitoring circuit. It is possible to convert this equipment into a one-studio installation by omitting the necessary studio equipment and the right-hand channel of speech input equipment as shown in the photograph. This equipment is operated from heavy duty storage "A" batteries and a 400-volt low capacity plate battery. The use of batteries provides assurance against power failures as well as an audio output signal which is entirely free from ripple.

Studio Equipment.—The studio equipment consists of three condenser microphones, one of which is used for announcement purposes and is mounted on a short stand so that it may be placed conveniently on a table in front of the announcer. Two microphones are used for program purposes and are mounted on an adjustable stand which allows the height of the microphone to be varied from 50 to 75 in. from the floor. The announcer's control box which comprises part of the studio equipment consists of control switches, signal lights and channel monitoring jacks mounted in a mahogany-finished box. With each announcer's control unit is a pair of monitoring headphones and an interphone system so that communication may be carried on with the control-room operator. A photograph of this equipment is shown in Fig. 514.

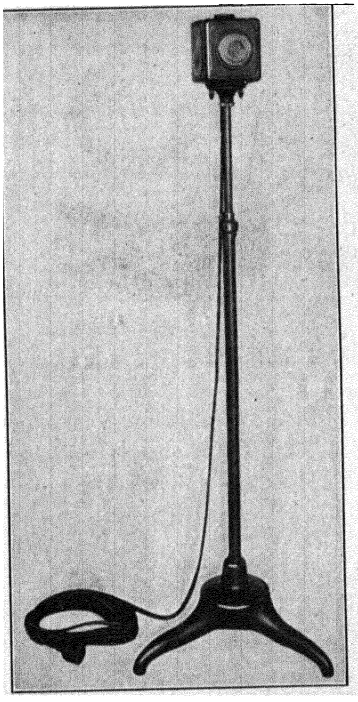

FIG. 512.—Condenser microphone, amplifier and program stand.

Condenser Microphone.—The condenser microphone (see Figs. 512 and 513) consists essentially of a thin, tightly stretched diaphragm spaced approximately 2/1000 in. from a flat disc, called a back plate. These two form the plates of the condenser. The diaphragm is moved by the sound vibration striking it and thus the capacity of the condenser is varied. This variation in capacity generates a variable voltage which is conducted to the input of a three-stage resistance capacity coupled amplifier utilizing three UX-864 tubes which have an extremely low microphonic response. This amplifier has a transformer output and may be connected so that it will feed into a line having an impedance of either 250 or 500 ohms. With a sound pressure input of the con-

denser microphone of 10 dynes per square centimeter the amplifier should give an output of approximately 0.0275 volt at 1000 cycles. This represents a power level of −35 db. The amplifier requires approximately 2 milliamperes at 180 volts, 3 milliamperes at 90 volts

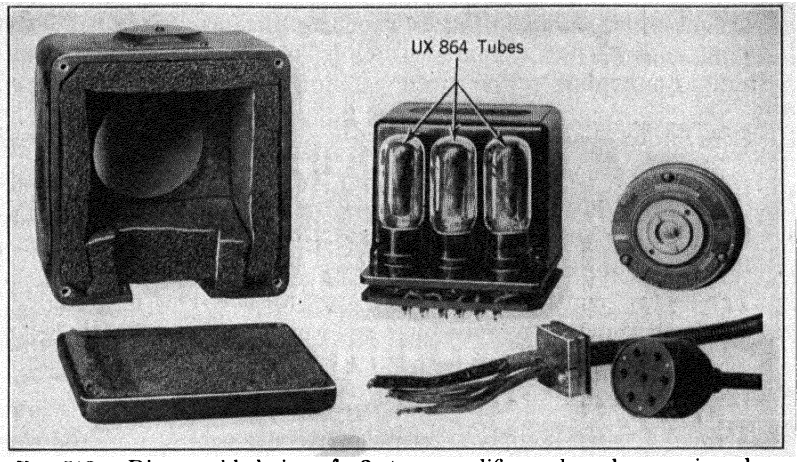

FIG. 513.—Disassembled view of a 3-stage amplifier and condenser microphone.

and 0.25 ampere at 6 volts. The 180-volt supply is used as a polarizing voltage on the condenser microphone unit. The power supply and the audio output of the amplifier are connected through a 30-foot shielded cable to a plug. This plug operates in conjunction with a wall outlet

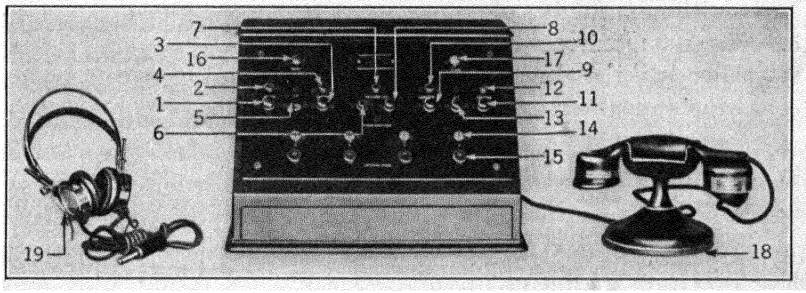

FIG. 514.—The type 7B announcer's control unit, consisting of monitoring headphones and an interphone system for communicating with the control-room operator.

which fits into a standard baseboard outlet box. The frequency characteristic of the microphone is substantially flat between 30 and 10,000 cycles, which allows it to pick up faithfully all sounds imposed on the diaphragm. Advantages of the condenser microphones over other

types are their good quality and the lack of hiss and distortion so common in carbon microphones.

Type 7B Announcer's Control Unit.—This unit is provided for use of the announcer in order that he may have perfect control over his program and know exactly what position he is operating in. Refer to the photograph shown in Fig. 514 for identification of the units given in the following list:

Item.

1. Control for operating the studio relay which is located on the 18B panel in a control room.
2. Corresponding position signal lamp.
3. Controls the adjunct relay which is located on the 18B panel.
4. Corresponding signal lamp for above.
5. The " Off " control for the foregoing two positions.
6. Controls the line relay which is located on the 18B panel and which controls the audio output of the 12A amplifier.
7. Indicating lamp for this position.
8. The " Off " control for this position.
9. Button for controlling the announce relay located on the 18B panel.
10. Corresponding signal lamp for above.
11. Button for controlling the program relay located on the 18B panel.
12. Associated signal lamp for above.
13. " Off " control for Items 9 and 11.
14. Channel signal lamp. This unit is so laid out that it can be used with any number of studios up to four.
15. Channel monitoring jacks.
16. " Ready " signal which is an indication from the control room for the announcer to proceed. This is controlled from a switch on the 18B panel.
17. Interphone signal lamp.
18. Interphone which provides communication between the announcer and the control-room operator.
19. Telephones operate in conjunction with Item 15.

The announcer's unit is so constructed that by removing four screws the panel may be lifted out from the cabinet in order that contacts and various circuits may be checked out or inspected.

All break circuits on the key switches are by-passed with a resistance capacity filter in order to prevent any clicks or surges from being introduced into the audio channel.

The major panels making up the control room assembly are as follows:

Type 8A Magnetophone Panel.—This panel is supplied to provide communication between the control-room operator and the transmitter control room or between the control-room operator and various local pick-up points. It consists of a 5-bar ringer, signal system, monophone unit, telephone transformer and a line output transformer. A front view of this panel may be seen by referring to the photograph, Fig. 515.

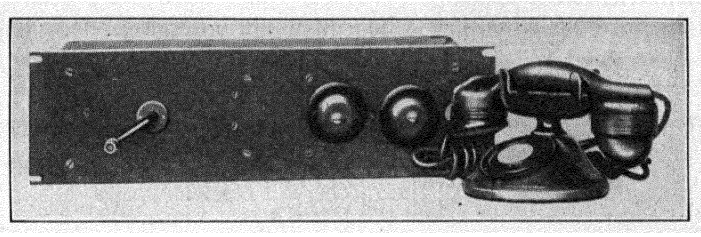

FIG. 515.—Type 8A magnetophone panel provides communication between the control operator and transmitter control room, or various local pick-up points.

Type 11A Condenser Microphone Control Panel.—One of these panels is required for each condenser microphone. It is equipped with a triple pole switch which controls the filament, 90- and 180-volt supply for the microphone. It has a filament rheostat which allows the proper setting of the filament current required by the microphone. A meter is provided for accurately setting the microphone supply. The output to the microphone is connected directly through means of shielded cable and lead-covered conductors to the input of this panel. A volume control which is calibrated in steps of 2 db is provided on this panel as a means of controlling the audio output of the condenser microphone.

The 12A Amplifier.—This is a high gain three-stage amplifier which raises the level of the microphone to such a value that it may be applied to the 500-ohm line connected to the transmitter. This amplifier has a 500-ohm input and 500-ohm output and employs three UX-210 tubes in which auto-transformer capacity coupling is used between stages.

Referring to the photographs in Figs. 516 and 517, the various items comprising this panel are as follows:

Item

1. Input transformer. This transformer is connected to the output of the announce microphone, the program microphones, or it may be connected to an external line through the proper operation of the relays located on the 18B panel.
2. Main volume control calibrated in steps of 2 db.
3. Bias battery box.

4. First interstage coupling capacity.
5. First interstage auto transformer.
6. Second interstage coupling capacity.
7. Second interstage auto transformer.
8. Output transformer coupling from the plate to the output UX-210 to a 500-ohm output.
9. Output listening jacks.
10. Filament voltmeter jack. The filament voltage on this panel is measured by means of a patch cord which is connected to the 15A meter panel.
11. Filament rheostat. When 12 volts is applied to the amplifier this rheostat should be adjusted so that, when the meter panel is plugged into Item 10, the meter will read 7.5 volts.

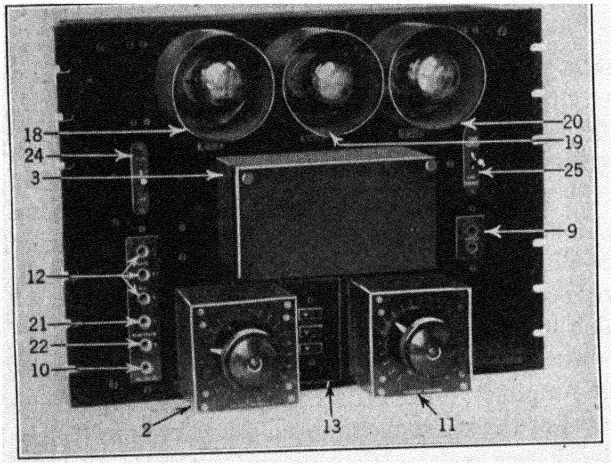

FIG. 516.—Front view of the RCA type 12A amplifier. Three stages of amplification are employed for raising the level of the microphone.

12. Plate current jacks. These jacks also operate in conjunction with the meter panel and when 135 volts is applied to the first stage and 400 volts to the second and third stages, jack No. 1 or the top jack should read between 3 and 5 milliamperes. Jacks No. 2 and 3 should read between 18 and 22 milliamperes.
13. Switch for controlling the filament, 135 and 400 volts supply.
14. Plate reactor for the first UX-210.
15. Second amplifier stage reactor.
16. Output stage reactor.

17. Output stage coupling capacity. The 400 volts direct current passes through the reactor, Item 16, and the audio signal is by-passed through the capacitor, Item 17, to the output transformer, Item 8.

18. First amplifier stage.

19. Second amplifier stage.

20. Output amplifier stage.

21 and 22. Bias voltage jacks. These two jacks operate in connection with the 15A meter panel; Item 21 should be adjusted to read approximately 4.5 volts and Item 22 should be adjusted to read approximately 28 volts. This adjustment can be made by changing connections on the bias battery terminals located inside of Item 3.

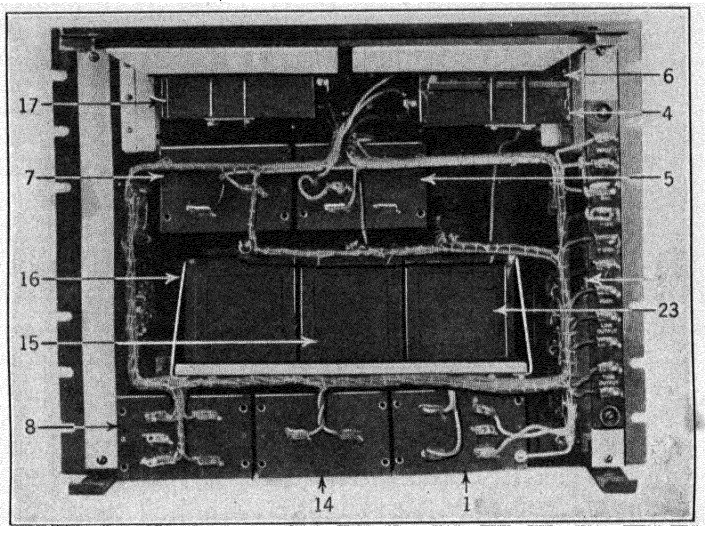

FIG. 517.—Rear view of RCA type 12A amplifier.

23. Filament reactor.

24. High-low gain switch. If the amplifier is used under such conditions where the input to the amplifier is considerably higher than the output of the condenser microphone, this switch may be operated in the low position. However, where the signals are considerably lower than the output of the condenser microphones, the switch may be operated in the high position. For average studio conditions the switch is operated in the high position.

25. Item 25 provides either a 500-ohm or a 5000-ohm output for the amplifier.

13A Volume Indicator.—This panel, a front view of which is shown in Fig. 518, is used as a level indicating device for monitoring programs and it may also be used for making frequency characteristic measurements. It has a bridging input transformer and its primary impedance is in the order of 15,000 ohms which allows it to be connected across a 500-ohm line without affecting the frequency characteristic or changing the level of the line. Across the secondary of the input transformer a potentiometer is connected which is calibrated in steps of 2 db. One side of this potentiometer is connected directly to the grid of a UX-841 which is biased such that a meter which is located in its plate circuit will indicate peaks of signal. A filament voltmeter jack is provided which allows the voltage to be set at $7\frac{1}{2}$ volts. An additional plate current jack is also provided which allows an external meter to be con-

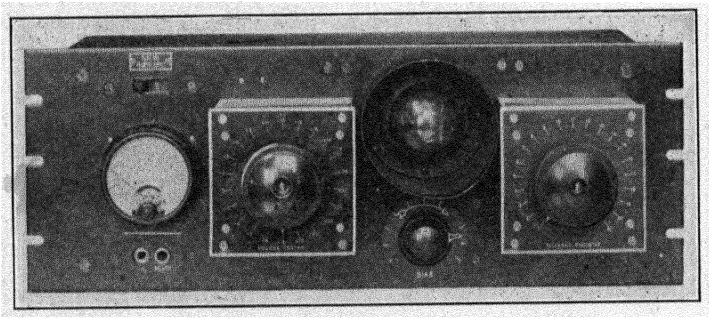

FIG. 518.—Front view of the RCA type 13A volume indicator for monitoring programs. It may also be used for making frequency characteristic measurements.

nected for checking the panel meter or providing a means for a temporary extension meter. A bias battery is required and is located on the rear of the panel and when the proper plate and filament voltage is applied to this panel the battery should be tapped such that the bias potentiometer may allow the meter to be set on 5 meter divisions, with no signal on the input. This unit is normally connected across the output of the 12A amplifier, and if, for example, the potentiometer is set to the plus 2 db position and the meter on peaks reaches 30 divisions, there is said to be a signal of plus 2 db on that line. This unit, in conjunction with the 11A volume control or 12A main volume control, is used to maintain a uniform output level.

The 15A Meter Panel.—This panel consists of three meters and two patch cords and is used to check the various bias batteries, filament voltages and plate currents for the panels comprising the control-room equipment.

Type 18B Signal and Control Panel.—The 18B signal and control panel is essentially the same as the 7B announcer's control unit as located in the studio, except that it contains, in addition, five relays. A duplicate control system is provided in order to insure continuity of all programs. The control-room operator by means of his monitoring speaker is in a position to check the operations of the announcer, and also to rectify quickly any mistake in switching which may be made. A front view of this panel is shown in Fig. 519; following is a brief description of the operation of this unit in conjunction with the 7B.

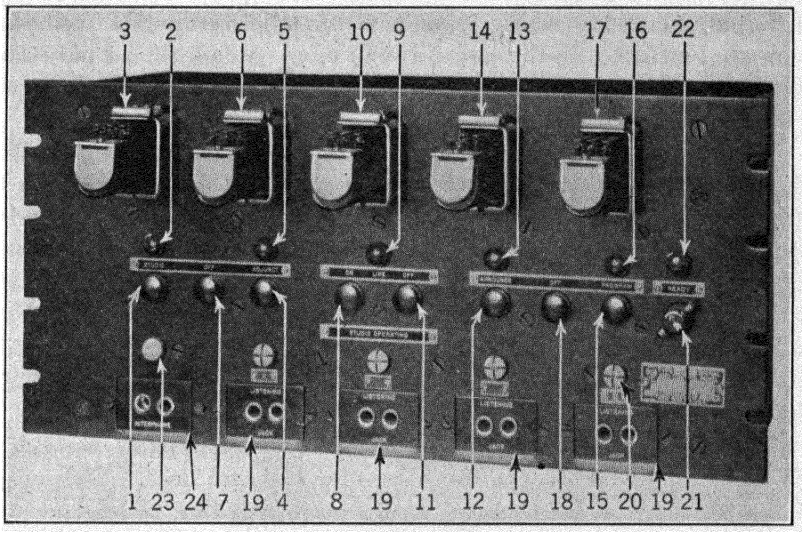

Fig. 519.—Front view of RCA type 18B signal and control panel with relay covers removed.

When the control-room operator has the filament and plate voltages applied to the various units, and they have all been checked for their proper value by means of the 15A meter panel, the operator closes the "Ready" switch, Item 21, which indicates to the announcer, through Item 16 on the 7B panel, that he can proceed at any time. The announcer when ready will close his button, Item 8, which operates relay No. 10, at the same time lighting lamp No. 9 and one of the four lamps, Item 20, on the 18B panel and one of the four lamps, Item 14, on the 7B panel, as well as lamp No. 7. The announcer next presses button No. 1 which operates relay No. 3. This relay, as well as the other four relays on this panel, has relay holding contacts, and only momentary contact for any of the buttons need be made to put the relays in operation. This relay also operates signal lamps on both units. The

announcer then presses his announce button on the 7B panel which operates relay No. 14 on the 18B panel. He then presses button No. 11 on the 7B which puts him in the program position. Should he fail to do this, the control-room operator may immediately press his program button on the 18B panel and perform the functions neglected by the announcer. For switching from "announce" to "program" or from studio to adjunct position, it is not necessary to press the "Off" button. Circuits are so interlocked that the pressing of one button automatically releases the other. In the case of handling the program which originates outside of the studio, it may be patched to the input of the adjunct relay whose input is terminated on the 33A jack panel shown in Fig. 522. In the case of two or more studios, the output relays, Item 10, are all interlocked so that only one studio may feed the line at a time.

In order to insure continuity of programs, the signal lights, Item 14, on the announcer's control box may be used as an indication for determining when any particular studio has released the line relay. Listening jacks are provided on the 18B panel and a pair of phones equipped with a double plug is also provided. The interphone system in the control room is provided with a double plug which is non-reversible and fits into Item 24 on the 18B panel. All relay contacts and break circuits are provided with filters in order to prevent clicks in the audio circuit.

The 19A Extension Panel.—The 19A extension panel consists of ten line drops which act as terminals for external lines. The output of the 8A magnetophone panel is terminated on this panel and may be connected to any of the ten lines by means of a patch cord. Every line drop is provided with double jacks to allow the unit to operate in conjunction with the 33A jack panel shown in Fig. 522.

Type 24A Audio Amplifier.—This is a two-stage audio amplifier (Fig. 520) which has a bridging input transformer similar to that used on the type 13A and has either a 500-ohm or a 5000-ohm output. The unit employs a UX-841 in the first stage and a UX-210 in the output stage and resistance capacity coupling is used between stages. This amplifier has a substantially flat frequency characteristic from 30 to 10,000 cycles and has a volume control which is calibrated in steps of 2 db. It operates from 400 volts and the plate current in the first stage is from 3 to 5 mils and the second stage 18 to 22 mils. A jack is provided for measuring filament voltage, and when 12 volts is supplied to the amplifier it should be set for 7.5 volts. Bias battery jacks are provided. Bias voltage for the first tube is approximately 4.5 volts and

for the UX-210 is approximately 28 volts. This amplifier is used in this equipment to operate a monitoring loudspeaker which is of the dynamic type.

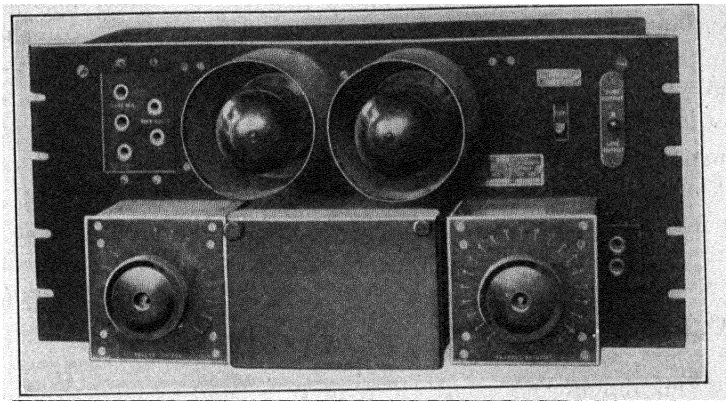

FIG. 520.—Type 24A resistance capacity coupled two-stage audio amplifier. It uses an 841 tube in the first stage and a 210 in the output stage.

The 28A Battery Supply Panel.—This is a main control power panel which contains three main switches for controlling the 12 volts, 135 volts and 400 volts and fuses for the individual units.

The 29D Battery Charging Panel.—A photograph of the 29D battery charging panel is shown in Fig. 521. This panel operates in conjunction with a three-unit motor-generator set and has the necessary meters, reverse current relays, field rheostats and charge-discharge switches for properly charging and discharging two high capacity 12-volt " A " storage batteries and one 8 ampere-hour 400-volt storage " B " battery. Discharge sides of the switching circuits are connected directly to the 28A battery supply panels. The parts are identified as follows:

Item

1. 400-volt reverse current relay.
2. Low voltage reverse current relay.
3. Low voltage contactor which is operated by Item 2. These relays are so adjusted that when the machine is started and the field switches, Items 9 and 10, are closed and rheostats properly adjusted, the contactors will close, thus charging the battery.
4. 400-volt charge-discharge switch with its associated fuses, Items 15 and 16.

5. 12-volt charge-discharge switches with their associated fuses, Items 18 and 19. It is possible to trickle charge both "A" batteries at one time or have one on charge while the other is being discharged. It is also possible with the switching combination to change filament batteries without interrupting the program.
6. A switch which, in conjunction with Items 17 and 20, controls the charging rate for the 12-volt, 40 ampere-hour relay switching battery.

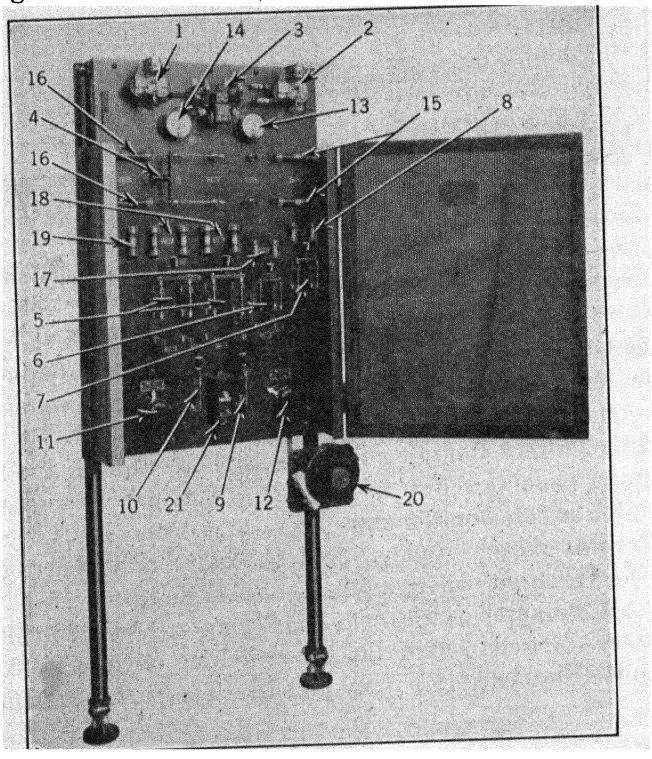

FIG. 521.—Front view of the 29-D battery-charging panel.

7. Provides control for 110 volts which is used for operating the monitoring speaker.
8. Fuses.
9. Field switch.
10. Field switch.
11. Field control switch.
12. Field control switch.
13. 75 ampere d-c. meter which shows the charging rate of the filamen battery.

14. $1\frac{1}{2}$-ampere d-c. meter which indicates the charging rate of the 400-volt plate battery.

15, 16, 17, 18 and 19. Fuses.

20. Rheostat to control charging rate.

21. Start-stop motor-generator push-button switch.

Remote Control Speech Input Equipment.—With some installations, in which the transmitter is located at a considerable distance from the studio control room, it is necessary to provide some type of line termination equipment which will increase the gain of the signal before feeding it directly to the transmitter. Fig. 522 shows a type of equipment which performs this function and, in addition, provides a termination for a number of lines, together with monitoring facilities and a means of making local announcements at the transmitter. A majority of panels involved on this assembly are similar to the panels which are used in conjunction with the studio control-room equipment. However, there are two panels, the 10A and 26A, which are used only in conjunction with this type of equipment.

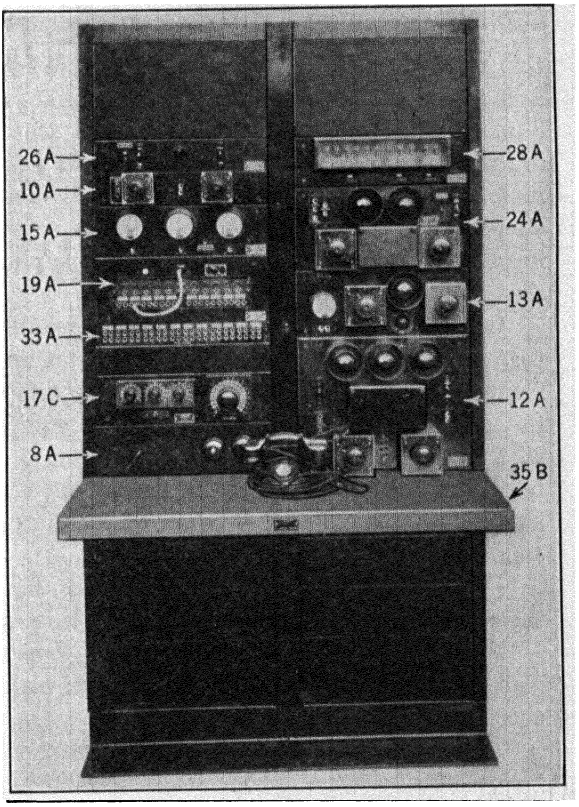

FIG. 522.—Front view of remote control-room equipment.

The 10A carbon microphone control panel provides a means of controlling one high quality double-button carbon microphone. It is equipped with a power supply switch, rheostat, two-button current measuring jacks and an output volume control. The 26A panel pro-

vides an "announce-program" switch in which the 10A is connected to the announce side and the program position would carry the studio program. It also contains a switch which allows the quality of the program to be checked either against that which is coming from the studio control room or against the rectifier output of the antenna carrier. This panel contains a power indicating lamp which is operated when the transmitter is put on the "air." It also contains a power switch which controls the 110-volt alternating current required for the monitoring loudspeaker field supply.

The type of monitoring speaker that is used in conjunction with this equipment as well as the control-room equipment is standard, with a modified input transformer. This unit consists essentially of an 8-in. dynamic cone mounted on a panel board approximately 28 by 30 in., and it obtains its field supply from a bank of Rectox units. The remote control equipment obtains its filament and plate supply from storage batteries, and essentially the same type of panel is employed for charging the batteries as shown in the photograph, Fig. 521, except that Item 20 is omitted.

General Instructions.—To provide reliable service, it is necessary that regular inspections be made of all the essential items on the equipment in order to guard against possible difficulties. Before beginning the program for the day, the battery equipment should be checked with regard to specific gravity and voltage. A program should never be attempted when the batteries are in a run-down condition. All battery connections should be periodically inspected for loose or corroded connections.

Particular care should be made to see that the connections between the various sections of the battery are clean and tight.

Frequent trouble may be expected if the storage batteries are assembled with vaseline between the contact-making surfaces of the connections.

All switches on the battery charging panels as well as fuses should be periodically inspected for proper tension as well as freedom from dirt.

The volume controls on the amplifiers should be inspected about once a week to check for proper tension and possible collection of dirt which is liable to result in noise. It is recommended that crocus cloth be used for cleaning volume controls and plugs. Under no circumstances should ordinary sandpaper or emery cloth be used.

It is always a good policy occasionally to check all soldered connections on the terminal boards as well as the connections running to the microphone wall outlets. Bias jacks are provided to allow regular checks to be made. When the bias battery starts to fall off in

voltage, it should be immediately replaced, as it may lead to a noisy amplifier.

Close cooperation should exist between the announcer and the control-room operator and between the control-room operator and the operators at the transmitter. In installations where such cooperation does not exist, it is liable to lead to programs with poor quality, program interruptions and all around unsatisfactory operation.

OPERATION AND ADJUSTMENT OF A LINEAR POWER AMPLIFIER

Definition.—A class "B" amplifier, by definition, is one in which the tube operates so that the power output is proportional to the square of the grid voltage excitation. This is accomplished by operating the tube with such a bias value that the plate current is practically zero without excitation. Essential half sine waves of plate current are produced on the least negative half cycle of grid voltage when excitation is applied. The efficiency of an average circuit operating as class "B" is approximately 33 per cent. This, of course, varies with the design and power of the circuit. Since the grid usually swings positive on excitation peaks, it introduces harmonics into the output, which must be taken out by suitably designed equipment.

Reasons for Use.—It is generally conceded that a high degree of modulation is desirable. This has come more forcibly to the attention of the broadcasters since the Federal Radio Commission passed a general order which required that all stations have not less than 75 per cent modulation on peaks. In earlier stages the broadcast transmitters were of lower power and plate modulation was generally used. With the advent of higher power broadcasting, however, serious disadvantages of this type of modulation became more and more apparent.

It is very difficult to get a high degree of modulation when a large number of modulator tubes are used, because of the limitations in their characteristics. With class "B" operation, modulation is accomplished in the low power stages. The equipment used in the modulated stage in this case is relatively inexpensive, as there are many different types of low power tubes and other equipment available at reasonable cost. The modulation reactors and tube complement required to accomplish modulation in the final stage of a high power station make the cost almost prohibitive.

In a high power plate modulated set, a sudden voltage surge in the audio input circuit produces an extremely high voltage on the modulators and power amplifiers which may cause failure of some of the tubes. If modulation is accomplished in a low power stage, the surge is perhaps

of the same order but, as a general rule, the low power tubes stand very high momentary overloads. If by chance failure does occur, the cost of replacement is small.

While it is true that the class " B " amplifier operates at approximately 33 per cent efficiency, the maintenance and initial cost of this type transmitter are usually less than those of a plate modulated set. This is especially true of the high power transmitter.

Difficulties Encountered in Design.—The method of operation of a class " B " amplifier makes it inherently unstable. This class of amplifier is undoubtedly the most difficult to operate. A circuit employing

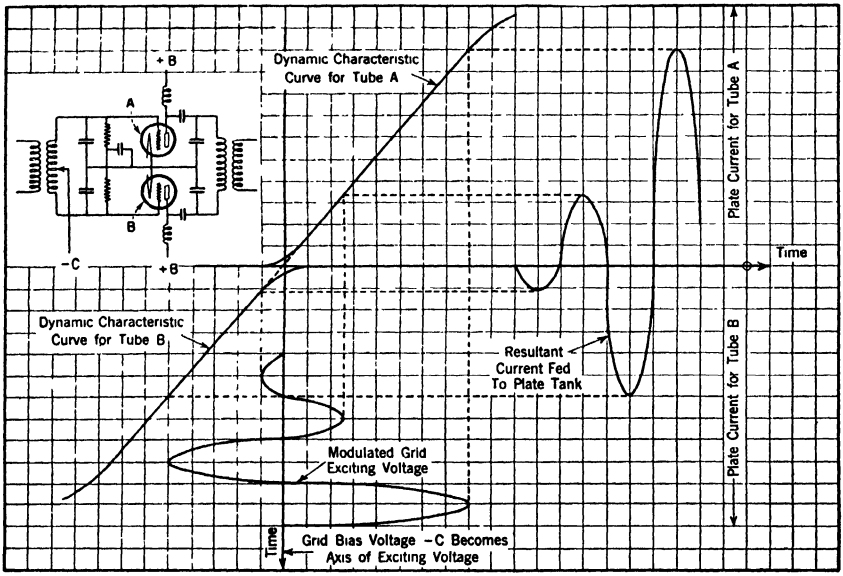

FIG. 523.—The dynamic characteristic curve of a push-pull type linear power amplifier has one side inverted with respect to the curve for the tube on the opposite side.

this class of amplifier must of necessity be designed for the express purpose; otherwise there will occur parasitic or spurious oscillations. These occur at various frequencies, often of extremely low wavelength. These oscillations are liable to occur in either the plate or grid circuits.

The arrangement of apparatus has a great deal to do with the prevention of this trouble. Parasitics manifest themselves in instability, poor quality, excessive plate dissipation and poor tube life. The reason for the inherent instability of this class amplifier is due, as mentioned before, to the manner in which it is operated.

During the negative half of the radio-frequency cycle no power is

drawn by the grid. The grid is then practically free and the tube in an unstable condition. Oscillations are liable to build up at this instant. They may occur with such force as to cause failure of a tube or else cause interruption of service. This action does not necessarily occur as instability may be present over only a small portion of the dynamic characteristic. This effect can be noticed by poor quality output from the transmitter.

Operation and Adjustment.—One of the first adjustments on a class " B " amplifier is to determine the proper bias to be used. The bias voltage necessary can be determined (approximately) by dividing the plate voltage by the mu of the tube. In a push-pull type linear power amplifier, the dynamic characteristic curve for one side is inverted with respect to the curve for the tube on the opposite side, as represented in Fig. 523; in order to get a sine wave output for the plate tank circuit, it is necessary to have both sides of the circuit nearly identical, so that equal plate currents are drawn. This means that the tube characteristic curves shown in Fig. 523 will have to be very nearly in line. From this figure it can be seen that each tube utilizes opposite halves of the grid voltage waves.

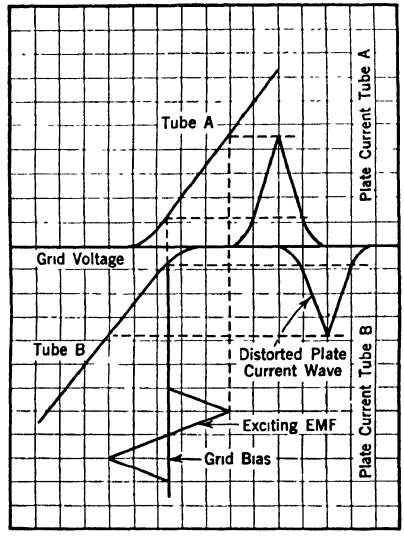

FIG. 524.—This curve shows the effect of too low bias potential on the grid of a push-pull type linear power amplifier.

Figs. 524 and 525 show the effect of too low and too high bias potential on the grid. The resultant in either case will be a distorted wave. (For convenience and simplicity, peaked wave form is used.)

It can be noted also from these graphs that there will be an increase in modulation, if the tube is operated as shown in Fig. 526. It is not desirable, however, to " pick up " modulation in any stage, as this can be accomplished only by distortion. Although it is true that the plate tank circuit operates to some degree like a fly-wheel and some irregularities in plate current wave form might be " ironed out," the tank circuit should not be relied upon to correct any deficiency. It can be further seen from this diagram that the efficiency would be somewhat higher and, also, that the resultant output would contain more harmonics.

Assuming the loading on the stage to be optimum value, the next step in the adjustment of a class " B " amplifier is to obtain the correct

excitation. If a transmitter is capable of 100 per cent modulation with a given carrier output, excitation is adjusted in such a manner that the plate current is 50 per cent of that of saturation; that is, to points YA and YB in Fig. 526. Furthermore, if the excitation is adjusted to a point higher on the curve than the points mentioned with 100 per cent modulation, the plate current will be driven beyond the points XA and XB. These points are known as *saturation points.* Saturation is defined as a point where an increase in grid excitation voltage does not give a corresponding increase in power output. In other words, the curve departs from linearity. Although it is true there may be some

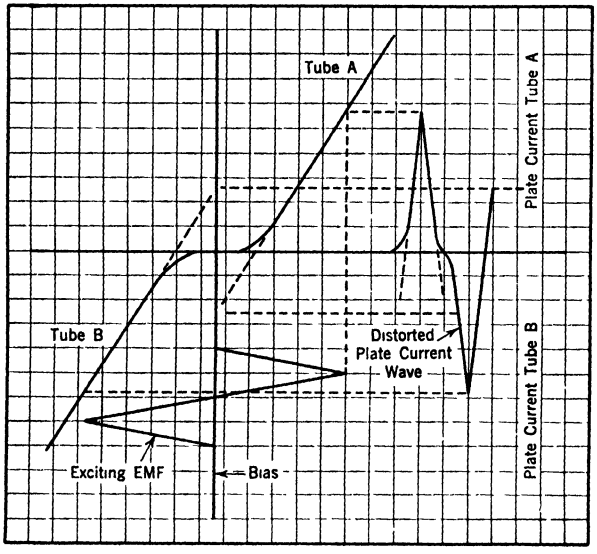

FIG. 525.—A curve showing the effect of too high bias potential on the grid of a push-pull type linear power amplifier.

little increase in power if the portion of the curve beyond XA and XB is used, this is not usable power, as the resultant output wave would then be distorted and harmonics would appear. The opposite limit of the modulation as shown is the point where the X axis and Y axis meet. The curves in Fig. 526 clearly show this.

With the 100 per cent negative modulation the only voltage on the grid is the bias voltage, and there is no exciting e.m.f. at that instant.

If adjustments are made, as shown in Fig. 526, it can be seen that the output wave will be an exact reproduction of the input wave with the exception of amplitude. If this is the case, the circuit is working as a class " B," or linear power amplifier.

If a class " B " amplifier is properly adjusted, the d-c. meters in the plate circuit of the amplifier should be the same when modulating as when not modulating. If the output wave is not symmetrical, the d-c. plate meters will increase or decrease, depending upon the direction of the maximum area. If the negative peaks of modulating frequency are reduced, the plate meters will increase. Likewise if the positive peaks are reduced, the plate current meter will show a reduced reading.

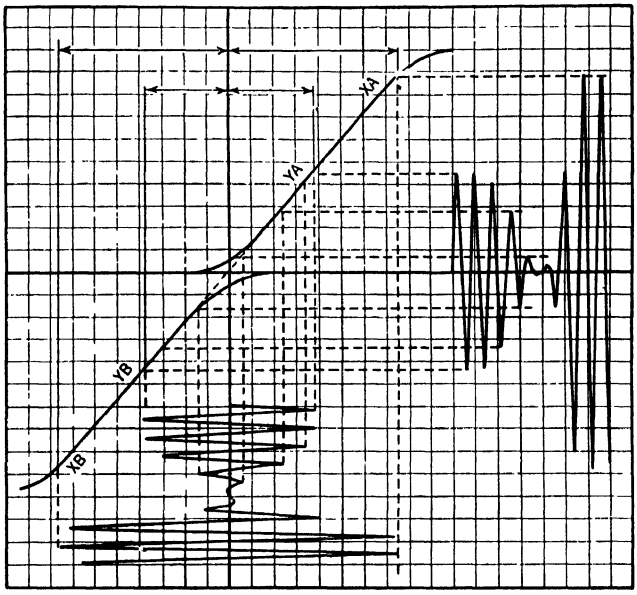

FIG. 526.—If the circuit adjustment of the push-pull type linear power amplifier is made to provide curves as shown in this graph, the output wave will be an exact reproduction of the input wave, with the exception of amplitude, and the circuit would then be operated as a Class B amplifier.

NEUTRALIZING

Neutralizing is an adjustment made in the radio-frequency amplifier to prevent self-oscillation. The electrostatic capacity between grid and plate of a vacuum tube, though of relatively small order, is sufficient in many cases to cause regeneration and oscillation in the amplifier. Either regeneration or oscillation will have a tendency to impair the operation of a transmitter. This is probably more true in the case of a class " B " amplifier than in any other type. Since a class " B " stage amplifies the modulated output from the preceding stage, it is absolutely necessary that this stage be controlled completely by the preceding stage.

Regeneration in the amplifier may or may not impair the operation, depending upon the phase relationships. Regeneration is liable to change the dynamic characteristic and consequently cause distortion of the output wave.

Neutralizing is accomplished by feeding back from plate to grid current of the same magnitude as that which passes from grid to plate through the inter-electrode capacitance, but of exactly the opposite phase. The difference in phase relationship is secured in the case of a single end amplifier by grounding the center of the tank coil and taking a voltage from the end opposite from the one connected to the plate. This voltage is, of course, 180 deg. out of phase from the plate end of the coil. In the case of a push-pull amplifier, feed-back voltage of opposite phase is obtained by connecting to the opposite end of the grid or plate tank circuit as the case may be.

The magnitude of the voltage required for neutralizing is obtained by adjustment of the neutralizing condenser. The neutralization of a stage may be checked roughly by tuning back of the stage through resonance and awaiting the reaction on the preceding stage. Another method is to switch the plate voltage on and off the stage and observe the reaction on the preceding stage.

The generally accepted method of neutralizing is to remove the plate voltage from the stage to be neutralized, place a radio-frequency ammeter in the tank circuit and adjust the neutralizing condensers in such a way that there is a minimum amount of current in the circuit. During the time the stage is neutralized, care should be taken that the tank circuit is always in resonance. If the stage is very far from being neutralized, the tank may have to be retuned several times before the final result is secured. The tank, of course, is always tuned for maximum current and the neutralizing condensers for minimum current.

Percentage of Modulation.—The curves in Fig. 527 show a high-frequency wave before modulation and during modulation. What we mean by the expression *percentage modulation* is easily understood from the curves since it is merely the ratio between the peak current of the modulating frequency, shown by amplitude A, and the peak current of the unmodulated carrier, shown by amplitude B. The modulation will be 100 per cent if two peaks represented by amplitudes A and B are equal, but if the two peaks are not the same then the modulation will be less than 100 per cent and the wave will not be completely modulated. Referring to the curves in Fig. 527, the percentage of modulation may be expressed according to the formula given at the top of the following page.

Expressed in terms of per cent, percentage of modulation is:

$$\text{Percentage modulation} = \frac{A}{B} \times 100 \text{ per cent.}$$

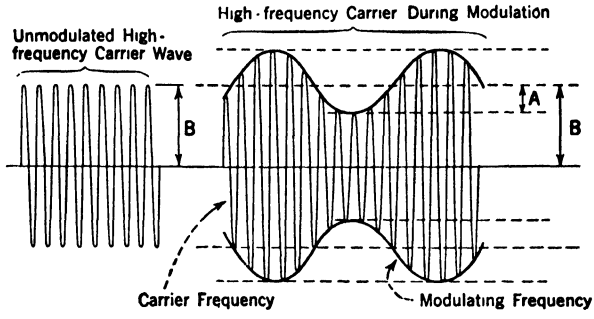

FIG. 527.—These curves, which explain percentage of modulation, show a high-frequency carrier wave before and after modulation.

Decibel-Transmission Unit.—For many years the efficiency of telephone circuits was expressed in terms of the "mile of standard cable," but with the rapid growth of telephone communication and radio broadcasting a more suitable standard was developed, known as the *transmission unit* or *decibel.* This unit may be defined as the difference between two amounts of sound powers when their intensities are in the ratio of $10^{0.1}$, indicating a ratio in the order of 0.0001 to 0.01. Such a ratio represents the amount of sound energy introduced into the input end of a telephone system as compared to the amount of sound energy reproduced at the other end or output, it being understood, of course, that the actual voice transmission is conveyed through a wire circuit by electrical impulses.

Experiments have proved that, when the effects which sounds produce on the organism of the ear are compared to actual differences in the magnitude of such sounds, the results give a logarithmic curve when plotted on a chart. That is, the curve shows the response of the ear to different degrees in volume or sound power changes. If a certain sound is either very weak or very loud and its intensity is varied by some means, it will require a much greater variation in the intensity changes for the average ear to notice that a change has taken place than would be the case for sounds of average loudness. Where a certain sound is steadily increased in volume it generally requires a change of at least 25 per cent in the actual volume before the ear becomes sensitive to that change.

A decibel is used to express only a ratio as just mentioned. For example, suppose the power amplifier of a certain receiver delivers 750 milliwatts of power to a loudspeaker and after adjustment it delivers 1000 milliwatts, then the ratio of this change is 750 to 1000. Although this ratio may appear large in figures yet the difference between the two sounds coming from the loudspeaker will be so slight that the ear will not be sensitive enough to detect the difference. Values can be used in the proper formulas and the number of db computed. It is estimated that the ear can just about distinguish between sound intensities which differ by 3 db. The following explains the relation between transmission units in decibels and power ratio, and so on.

A transmission unit is a unit for the logarithmic expression of ratios of power, voltages, or currents, in a transmission system. There are now in rather widespread use, internationally, two transmission units, a Napierian unit called the " Neper," and a decimal unit called the " Bel." As given in the Proceedings of the Institute of Radio Engineers, decimal multiples or sub-multiples of either of these units may be used, such as " decineper " and " decibel."

The number of units of transmission in the case of a ratio of two powers, P_1 and P_2 is:

$$\text{in the napierian system: } 1/2 \log_e \frac{P_1}{P_2}$$

$$\text{in the decimal system: } \log_{10} \frac{P_1}{P_2}.$$

The number of units of transmission in the case of a ratio of two voltages E_1 and E_2, of two currents I_1 and I_2, if the squares of these ratios are equal to the power ratio, is:

$$\text{in the napierian system: } \log_e \frac{E_1}{E_2} \text{ or } \log \frac{I_1}{I_2}$$

$$\text{in the decimal system: } 2 \log_{10} \frac{E_1}{E_2} \text{ or } 2 \log_{10} \frac{I_1}{I_2}.$$

The unit based on the decimal system and having a size one-tenth of that here defined is widely used in the United States. This unit is, therefore, the " decibel " (abbreviated " db "), and has been generally referred to merely as " the transmission unit " or " TU."

The following table gives the numerical values of power, voltage, and current ratios corresponding to particular numbers in decibels:

Power Ratio		Transmission Units in Decibels (db)	
1	$(=10^0)$	0	$(=10 \log_{10} 1)$
1 259	$(=10^{0.1})$	1	$(=10 \log_{10} 1\ 259)$
10	$(=10^1)$	10	$(=10 \log_{10} 10)$
100	$(=10^2)$	20	$(=10 \log_{10} 100)$
1000	$(=10^3)$	30	$(=10 \log_{10} 1000)$

Voltage or Current Ratio	Transmission Units in Decibels (db)
0 001	−60.00
0 005	−46.02
0 01	−40.00
0 05	−26 02
0 1	−20.00
0 2	−13 98
0 5	− 6 02
1 0	0 00
1 5	3 52
2	6 02
5	13 98
10	20 00
20	26 02
50	33 98
100	40.00
500	53 98
1000	60.00

APPENDIX

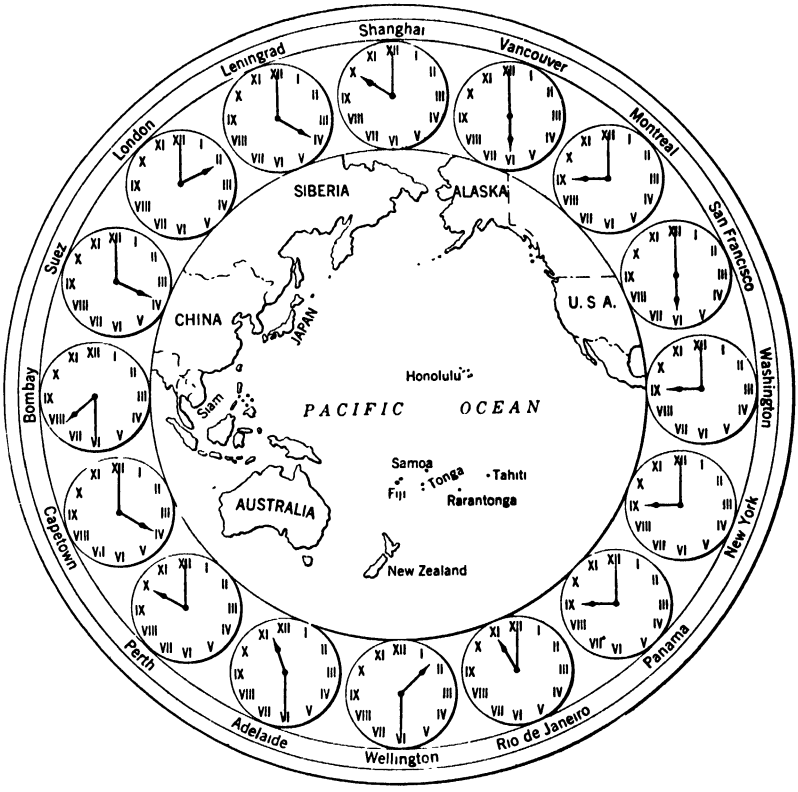

Standard Time Chart. Radiotelegrams are filed on the basis of 24-hour time. Time changes 1 hour with each 15 degrees difference in longitude. When it is 2 A.M. in London, G.M.T. (Greenwich mean time) it is 9 P.M. in New York, E.S.T. (Eastern standard time) and 6 P.M. in San Francisco, P.S.T. (Pacific standard time).

CHARACTERISTICS OF X-L FILAMENT TRANSMITTING VACUUM TUBES

	UX- or UV-210	UV-203-A	UV-211	UV-204-A	UV-851	UX-852	Screen Grid		UV-207
							UX-860	UV-861	
Rated output (watts)	7 5	50	50	250	1000	75	75	750	20 kw.
Maximum plate dissipation (watts) or safe power dissipation	15	100	100	200	750	100	100	400	10 kw
Filament volts	7 5	10	10	11	11	10	10	11	22
Filament amperes	1 25	3 25	3 25	3 85	15 5	3 25	3 25	10	52
Screen grid volts							500	750	
Plate voltage	350	1000	1000	2000	2000	2000	2000	3000	15,000
Plate current oscillating (m a.)	60	125	125	200	875	75	100	350	2 amp.
Amplification constant (approx.)	7 5	25	12	24	20	12	200	300	20
Plate impedance (approx ohms) at zero grid and rated plate voltage*.	3500	5000	1900	4700	850	6000			2000
Mutual conductance (micromhos) at zero grid and rated plate voltage* ...	2150	5000	6300	5100	23,500	2000			.
Plate current (m.a.) at zero grid and rated plate voltage*..	70	120	320	275	1550		85	172	2000
Over-all length, inches	5¼	7⅞	7⅞	14¼	17½		8¾	17 3/32	19⅝

*These figures are given for comparison only and do not necessarily apply to all conditions of normal operation.

Characteristics of Variable Mu and Pentode Tubes

Use	RCA-235	RCA-236	RCA-237	RCA-238	RCA-247
	Variable-Mu or Super-Control Screen-Grid Amplifier	Screen-Grid Radio-Frequency Amplifier	General Purpose	Power Output Pentode	Power Output Pentode
Filament or Heater Voltage.	2.5	6.3 d-c	6.3 d-c	6.3 d-c	2.5
Filament or Heater Current.	1.75	0.3	0.3	0.3	1.5
Plate Voltage.	180	90**, 135, 135*	90**, 135*	135	250
Screen Voltage	75	55**, 67.5, 75*	.....	135	250
Grid Voltage...	−1.5	−1.5**, −1.5, −1.5*	−6**, −9	−13.5	−16.5
Plate Current (M.A.).	9	1.8, 3, 3.5	2.7, 4.5	8	32
Screen Current (M.A.). ..	Not over $\frac{1}{3}$ plate current	Not over $\frac{1}{3}$ plate current	.....	2.5	7.5
Plate Resistance (Ohms).	200,000	200,000, 300,000, 250,000	11,500, 10,000	110,000	38,000
Mutual Conductance (Micromhos).	1100	850, 1050, 1100	780, 900	900	2500
Load Resistance (Ohms)....		... . ..	14,000, 12,500	15,000	7000
Power Output (Watts)..	. ..	.....	0.03, 0.075	0.375	2.5
Amplification Factor..... .	..	170, 315, 275	9, 9	100	
Grid to Plate Capacitance (Approx.)	0.010 uuf.	0.010 uuf.	2.0 uuf.	....	
Input Capacitance (Approx.) ..	5 uuf.	4 uuf.	.	.....	.
Output Capacitance (Approx.) .	10 uuf.	9 uuf.	...	.....	
Grid to Cathode (Approx.)...	.	. . .	3.3 uuf.	... .	.
Plate to Cathode (Approx.)..	. .	.	2.3 uuf.	. .	
Overall Length (Max.).....	$5\frac{1}{4}$ in.	$4\frac{11}{16}$ in.	$4\frac{1}{4}$ in.	$4\frac{11}{16}$ in.	$5\frac{5}{8}$ in.
Bulb..... .	S14	S12	S12	S12	S17
Cap..... .	0.346 in.–0 369 in.	0.346 in.–0.369 in.	.	0.346–0.369	
Base.	UY	Small UY	Small UY	Small UY	UY
Socket..	UY	UY	UY	UY	UY

* Recommended values for use in automobile receivers

** Recommended values for use in receivers designed for 110-volt d-c operation.

TRIGONOMETRIC FUNCTIONS

Angle ϕ or Lag Angle	Sine or Induction Factor	Cosine or Power Factor	Tan	Angle ϕ or Lag Angle	Sine or Induction Factor	Cosine or Power Factor	Tan
0	0 000	1 000	0 000	.. ..	. . .	. . . .	.. . . . .
1	0 017	0 999	0 017	46	0 719	0 695	1 04
2	0.035	0 999	0 035	47	0.731	0 682	1.07
3	0 052	0 999	0 052	48	0 743	0 669	1.11
4	0 070	0 998	0 070	49	0 755	0 656	1.15
5	0 087	0.996	0.087	50	0 766	0 643	1.19
6	0 105	0 995	0 105	51	0 777	0 629	1 23
7	0 122	0 993	0.123	52	0 788	0 616	1 28
8	0 139	0 990	0 141	53	0 799	0.602	1 33
9	0 156	0 988	0 158	54	0 809	0 588	1 38
10	0 174	0 985	0 176	55	0 819	0.574	1 43
11	0 191	0 982	0 194	56	0 829	0.559	1.48
12	0 208	0 978	0 213	57	0 839	0 545	1.54
13	0 225	0 974	0 231	58	0 848	0 530	1 60
14	0 242	0 970	0 249	59	0 857	0 515	1 66
15	0 259	0 966	0 268	60	0 866	0 500	1.73
16	0 276	0 961	0 287	61	0 875	0 485	1.80
17	0 292	0 956	0 306	62	0 883	0 469	1.88
18	0 309	0 951	0 325	63	0 891	0 454	1 96
19	0 326	0 946	0 344	64	0.898	0 438	2 05
20	0 342	0 940	0 364	65	0 906	0 423	2.14
21	0 358	0 934	0 384	66	0 914	0 407	2 25
22	0 375	0 927	0 404	67	0 921	0 391	2 36
23	0 391	0 921	0 424	68	0 927	0 375	2 48
24	0 407	0 914	0 445	69	0 934	0 358	2.61
25	0 423	0 906	0 466	70	0 940	0 342	2 75
26	0 438	0 898	0 488	71	0 946	0 326	2 90
27	0.454	0 891	0 510	72	0 951	0 309	3.08
28	0 469	0 883	0 532	73	0 956	0 292	3.27
29	0 485	0.875	0 554	74	0 961	0 276	3 49
30	0 500	0 866	0 577	75	0 966	0 259	3 73
31	0 515	0 857	0 601	76	0 970	0 242	4 01
32	0 530	0 848	0 625	77	0 974	0 225	4 33
33	0 545	0 839	0 649	78	0 978	0.208	4 70
34	0 559	0 829	0 675	79	0 982	0 191	5 14
35	0 574	0 819	0 700	80	0 985	0 174	5 67
36	0 588	0 809	0 727	81	0 988	0 156	6 31
37	0 602	0 799	0 754	82	0 990	0 139	7.12
38	0 616	0 788	0 781	83	0 993	0 122	8.14
39	0 629	0 777	0 810	84	0 995	0 105	9.51
40	0 643	0 766	0 839	85	0 996	0 087	11 43
41	0 656	0 755	0 869	86	0 998	0 070	14 30
42	0 669	0.743	0 900	87	0 999	0 052	19 08
43	0 682	0 731	0 933	88	0 999	0 035	28.64
44	0 695	0 719	0 966	89	0 999	0 017	57.28
45	0 707	0 707	1 000	90	1 000	0 000	Infinity

$$\sin \phi = \frac{A}{C} \qquad \cot \phi = \frac{B}{A}$$

$$\cos \phi = \frac{B}{C} \qquad \sec \phi = \frac{C}{B}$$

$$\tan \phi = \frac{A}{B} \qquad \operatorname{cosec} \phi = \frac{C}{A}$$

DIMENSIONS, LENGTHS AND RESISTANCES OF "COTTON ENAMELED" MAGNET WIRE

B & S Gage	Diameter of Bare Wire, Inches	Diameter over Insulation, Inches		Feet per Pound		Pounds per 1000 Ft		Ohms per Pound	
		Single	Double	Single	Double	Single	Double	Single	Double
8	0 1280	0 1355	0 1410	19 7	19 4	50 7	51 5	0 124	0 0122
9	0 1144	0 1220	0 1274	24 7	24 2	40 5	41 3	0.0195	0 0191
10	0 1018	0 1093	0. 1148	31 0	30 4	32 3	32 9	0 0309	0 0303
11	0 0907	0 0982	0 1037	39 2	38 2	25 5	26 2	0 0492	0 0480
12	0 0808	0 0883	0 0938	49 3	48 0	20 3	20 8	0 0783	0 0761
13	0 0719	0 0795	0 0850	62 0	60 3	16 1	16 6	0 124	0 121
14	0 0641	0 0715	0 0770	78 1	75 8	12 8	13 2	0 197	0 191
15	0 0571	0 0640	0 0695	98 3	95 2	10 2	10 5	0 312	0 302
16	0 0508	0 0573	0 0623	124 0	118 0	8 06	8 48	0 497	0 473
17	0 0453	0 0517	0 0563	156 0	150 0	6 41	6 67	0 789	0 759
18	0 0403	0 0468	0 0518	194 0	187 0	5 15	5 35	1 24	1 19
19	0 0359	0 0424	0 0474	245 0	234 0	4 08	4 27	1 97	1 88
20	0 0320	0 0379	0 0424	307 0	291 0	3 26	3 44	3 12	2 95
21	0 0285	0 0339	0 0384	385 0	362 0	2 60	2 76	4 91	4 62
22	0 0253	0 0308	0 0353	481 0	449 0	2 08	2 23	7 76	7 25
23	0 0226	0 0281	0 0326	601 0	555 0	1 66	1 80	12 2	11 3
24	0 0201	0 0255	0 0300	750	684 0	1 33	1 46	19 2	17 5
25	0 0179	0 0232	0 0277	936 0	842 0	1 07	1 19	30 2	27.2
26	0 0159	0 0207	0 0247	1,170 0	1040 0	0 855	0 961	47 7	42 3
27	0 0142	0 0189	0 0229	1,450 0	1270 0	0 690	0 788	74 5	65 2
28	0 0126	0 0173	0 0213	1,810 0	1550 0	0 552	0 645	117.0	100 0
29	0 0113	0 0160	0 0200	2,240 0	1880 0	0 446	0 532	183 0	154 0
30	0 0100	0 0147	0 0187	2,780 0	2280 0	0 360	0 438	286 0	235 0
31	0 0089	0 0134	0 0174	3,440 0	2720 0	0 291	0 368	447 0	353 0
32	0 0079	0 0124	0 0164	4,240 0	3240 0	0 236	0 309	695 0	531 0
33	0 0071	0 0115	0 0155	5,200 0	3820 0	0 192	0 262	1070 0	789 0
34	0 0063	0 0108	0 0148	6,380 0	4460 0	0 157	0 224	1660 0	1160 0
35	0 0056	0 0100	0 0140	7,810 0	5140 0	0 128	0 195	2560 0	1690 0
36	0 0050	0 0094	0 0134	9,540 0	5850 0	0 105	0 171	3950 0	2420 0
37	0 0044	0 0088	0 0128	11,600 0	6530 0	0 0862	0 153	6060 0	3410 0
38	0 0040	0 0083	0 0123	14,000 0	7020 0	0 0715	0 143	9220 0	4620 0

Dimensions, Lengths, Weights and Resistances of Silk-covered Magnet Wire

B & S Gage	Diameter of Bare Wire, Inches	Diameter over Silk, Inches		Feet per Pound		Pounds per 1000 Ft		Ohms per Pound	
		Single	Double	Single	Double	Single	Double	Single	Double
16	0 0508	0 0528	0 0548	127 0	125 0	7.87	8 00	0 509	0 501
17	0 0453	0 0473	0 0493	160 0	158 0	6 25	6 33	0 908	0 800
18	0 0403	0 0423	0.0443	201 0	199 0	4 97	5 02	1 29	1 27
19	0 0359	0 0379	0.0399	253 0	250 0	3 95	4 00	2 03	2 01
20	0 0320	0 0340	0 0360	318 0	311 0	3 14	3 19	3 22	3 18
21	0 0285	0 0305	0 0325	401 0	394 0	2 49	2 54	5.12	5 04
22	0 0253	0 0273	0 0293	505 0	494 0	1 98	2 02	8 15	7 97
23	0 0226	0 0246	0.0266	635 0	621 0	1 58	1 61	12 9	12 6
24	0 0201	0 0221	0 0241	798 0	778 0	1 25	1 29	20 5	20 0
25	0 0179	0 0199	0 0219	1,000 0	975 0	1 00	1 03	32.3	31.5
26	0 0159	0 0179	0 0199	1,260 0	1,220 0	0 794	0 820	51.3	49.7
27	0 0142	0 0162	0 0182	1,580 0	1,530 0	0 633	0 653	81.2	78.6
28	0 0126	0 0146	0 0166	1,990 0	1,910 0	0 502	0 523	129.0	124.0
29	0 0113	0 0133	0 0153	2,480 0	2,380 0	0 403	0 420	203.0	194 0
30	0 0100	0.0120	0 0140	3,130 0	2,960 0	0 320	0 338	332.0	305 0
31	0 0089	0 0109	0 0129	3,920 0	3,680 0	0 255	0 272	510.0	478 0
32	0 0079	0 0099	0 0119	4,900 0	4,570 0	0 204	0 219	803 0	748 0
33	0 0071	0 0091	0 0111	6,120 0	5,660 0	0 163	0 177	1,260 0	1,170 0
34	0 0063	0 0083	0 0103	7,650 0	6,980 0	0 131	0 143	1,990 0	1,820 0
35	0 0056	0 0076	0 0096	9,520 0	8,570 0	0 105	0 117	3,120 0	2,820 0
36	0 0050	0 0070	0 0090	11,900 0	10,500 0	0 0840	0 0952	4,930 0	4,350 0
37	0 0044	0 0064	0 0084	14,700 0	12,800 0	0 0680	0 0781	7,670 0	6,680.0
38	0 0040	0 0060	0 0080	18,200 0	15,500 0	0 0549	0 0645	12,000 0	10,200.0
39	0 0035	0 0055	0 0075	22,600 0	18,700 0	0 0442	0 0535	18,800 0	15,500 0
40	0 0031	0 0051	0 0071	27,900 0	22,400 0	0 0358	0 0446	29,200 0	23,500 0

DIELECTRIC CONSTANT (SPECIFIC INDUCTIVE CAPACITY) OF VARIOUS GASES, LIQUIDS AND SOLIDS

Substance	Temperature, Degrees C.	Dielectric Constant	Remarks
Gases:			
Air	0	1 000 Unity	Pressure, 1 atmos.
	19	1 022	Pressure, 20 atmos.
Vacuum		0 999	
Oils:			
Castor	11	4 67	
Petroleum		2 13	
Transformer		2 5	
Vaseline		2 17	
Water		81 0	Distilled
Solids:			
Ebonite		2 5–3 5	
Fibre		5–8	Vulcanized
Glass	Density		
Flint Glass	4 5	9.9	
Flint Glass	2 87	6 6	
Lead Glass	3 0–3 5	5 4–8 0	
Gutta Percha		3 3–4 9	
Mica		4–8	Indian and Canadian
Paper		1 5–3 0	Dry
Paraffin		2.1–2 3	
Porcelain		4.4 Approx.	Glazed
Silk		4.6	
Quartz		4 5	
Shellac		3 0–3.7	
Maple		3 0–4 5	Untreated; dry

FUSING EFFECTS OF CURRENT ON COPPER WIRE

B. & S. Gage	Copper, Amperes	B. & S. Gage	Copper, Amperes	B. & S. Gage	Copper, Amperes
10	333 0	21	49 3	31	8 75
11	284 0	22	41 2	32	7 26
12	235 0	23	34 5	33	6 19
13	200 0	24	28 9	34	5 12
14	166 0	25	24 6	35	4 37
15	139 0	26	20 6	36	3 62
16	117.0	27	17 7	37	3 08
17	99 0	28	14 7	38	2 55
18	82 8	29	12 5	39	2 20
19	66 7	30	10 25	40	1 86
20	58 3				

METRIC SYSTEM

	Meters	Inches	Feet	Yards	Miles
Millimeter (mm.)..	001	0 039370	0 003281	0 001094	
Centimeter (cm.)	0 01	0 393701	0 032809	0 010936	
Decimeter..	0.1	3.93701	0 328084	0 109361	
Meter.....	1 0	39 370113	3 280843	1 093614	0.000621
Decameter....	10 0	.	32 80843	10 93614	0 006214
Hectometer.. ...	100.0	.	328 0843	109.3614	0.062137
Kilometer....	1000 0		3280 843	1093.614	0.621372
Miriameter	10,000 0			.....	6 213718

Meter

1 inch = .02539954

1 foot = .3047945 or 30.47 cm. 1 meter = 39.37 in.

CHARACTERISTIC SIGNALS SENT OUT BY RADIO BEACON STATIONS

(Courtesy, U. S. Hydrographic Office)

Beacon	Signal Characteristic	
Ambrose Channel	One dash	60 secs. on, 120 secs. off
Sea Girt Light Station	Three dashes	60 secs. on, 120 secs. off
Fire Island Light-vessel	Two dashes	60 secs. on, 120 secs. off
Diamond Shoals Light-vessel	Two dashes	60 secs. on, 120 secs. off
San Francisco Light-vessel	Two dashes	60 secs. on, 120 secs. off
Boston Light-vessel, Mass.	One dash, one dot	60 secs. on, 120 secs. off
Nantucket Shoals Light	Four dashes	60 secs. on, 120 secs. off
Cape Henry Light-station	Two dots, one dash	60 secs. on, 120 secs. off
Blunt's Reef Light-vessel	One dash	60 secs. on, 120 secs. off
Columbia River Light-vessel	Three dashes	60 secs. on, 120 secs. off
Swiftsure Bank Light-vessel	Two dashes	60 secs. on, 120 secs. off

VOLTAGE REQUIRED TO PRODUCE A SPARK IN AIR BETWEEN SPHERES OF (1 CM. OR .3937 IN.) DIAMETER

Length of Spark Gap in		Volts	Length of Spark Gap in		Volts
Centimeters	Inches		Centimeters	Inches	
0 02	0 0079	1,560	0 40	0.1575	14,400
0 04	0 0157	2,460	0 50	0 1969	17,100
0.06	0 0236	3,300	0 60	0 2362	19,500
0 08	0.0315	4,050	0 70	0 2756	21,600
0 10	0 0394	4,800	0.80	0 3150	23,400
0 20	0 0787	8,400	0.90	0 3543	24,600
0 30	0.1181	11,400	1.00	0 3937	25,500

Relation of Natural Wavelength, Frequency, and Inductance-Capacity Product in Condenser Circuits

Courtesy of Wireless Specialty Apparatus Company, Boston, Mass.

This table gives the relation between free wavelength in meters, frequency in cycles per second and capacity-inductance product in microfarads and microhenrys, for circuits between 1 and 39,000 meters. The relation between wavelength and capacity-inductance product may be relied upon throughout the table to within one part in two hundred. Three examples are given below, to illustrate important uses of the table.

Example 1. What is the natural wavelength of a circuit containing a capacity of 0.001 microfarad, and an inductance of 454 microhenrys? The product of inductance and capacity is $454 \times 0.001 = 0.454$. Find 0.454 under L×C; opposite under "meters" is 1270, the natural wavelength of the circuit.

Example 2. What capacity must be associated with an inductance of 880 microhenrys, in order to tune the circuit to 3500 meters? Find opposite 3500 meters the L×C value 3.45; divide this by 880, and the quotient, 0 00397, is the desired capacity in microfarads.

Example 3. A condenser has a capacity of 0.004 microfarad. What inductance must be placed in series with this condenser in order that the circuit shall have a wavelength of 600 meters? From the table, the L×C value corresponding to 600 meters is 0.1013. Dividing this by 0.004, the capacity of the condenser, gives the desired inductance, 25.3 microhenrys.

Meters	n	L×C	Meters	n	L×C	Meters	n	L×C
1	300,000,000	0 0000003	200	1,500,000	0.01126	550	546,000	0 0852
2	150,000,000	0 0000011	210	1,429,000	0.01241	555	541,000	0 0867
3	100,000,000	0.0000018	220	1,364,000	0.01362	560	536,000	0.0883
4	75,000,000	0 0000045	230	1,304,000	0 01489	565	531,000	0 0899
5	60,000,000	0.0000057	240	1,250,000	0 01621	570	527,000	0 0915
6	50,000,000	0.0000101	250	1,200,000	0 01759	575	522,000	0 0931
7	42,900,000	0.0000138	260	1,154,000	0 01903	580	517,000	0 0947
8	37,500,000	0.0000180	270	1,111,000	0 0205	585	513,000	0 0963
9	33,330,000	0.0000228	280	1,071,000	0 0221	590	509,000	0 0980
			290	1,034,000	0 0237	595	504,000	0 0996
10	30,000,000	0 0000282	300	1,000,000	0 0253	600	500,000	0 1013
15	20,000,000	0 0000635	310	968,000	0 0270	605	496,000	0 1030
20	15,000,000	0 0001129	320	938,000	0 0288	610	492,000	0 1047
25	12,000,000	0.0001755	330	909,000	0 0306	615	488,000	0 1065
30	10,000,000	0.0002530	340	883,000	0 0325	620	484,000	0 1082
35	8,570,000	0 0003446	350	857,000	0 0345	625	480,000	0.1100
40	7,500,000	0 000450	360	834,000	0.0365	630	476,000	0.1117
45	6,670,000	0 000570	370	811,000	0 0385	635	472,000	0.1135
			380	790,000	0 0406	640	469,000	0.1153
			390	769,000	0 0428	645	465,000	0 1171
50	6,000,000	0 000704	400	750,000	0.0450	650	462,000	0 1189
55	5,450,000	0 000852	410	732,000	0.0173	655	458,000	0 1208
60	5,000,000	0.001014	420	715,000	0.0496	660	455,000	0.1226
65	4,620,000	0 001188	430	698,000	0.0520	665	451,000	0.1245
70	4,290,000	0 001378	440	682,000	0 0545	670	448,000	0.1264
75	4,000,000	0.001583	450	667,000	0.0570	675	444,000	0.1283
80	3,750,000	0.001801	460	652,000	0 0596	680	441,000	0.1302
85	3,529,000	0.002034	470	639,000	0.0622	685	438,000	0.1321
90	3,333,000	0 002280	480	625,000	0.0649	690	435,000	0 1340
95	3,158,000	0 002541	490	612,000	0 0676	695	432,000	0 1360
100	3,000,000	0 00282	500	600,000	0 0704	700	429,000	0 1379
110	2,727,000	0.00341	505	594,000	0 0718	705	426,000	0 1399
120	2,500,000	0 00405	510	588,000	0 0732	710	423,000	0 1419
130	2,308,000	0.00476	515	583,000	0 0747	715	420,000	0 1439
140	2,143,000	0.00552	520	577,000	0 0761	720	417,000	0 1459
150	2,000,000	0 00633	525	572,000	0 0776	725	414,000	0 1479
160	1,875,000	0.00721	530	566,000	0 0791	730	411,000	0 1500
170	1,764,000	0.00813	535	561,000	0 0806	735	408,000	0 1521
180	1,667,000	0 00912	540	556,000	0 0821	740	405,000	0 1541
190	1,579,000	0 01015	545	551,000	0 0836	745	403,000	0 1562

RELATION OF NATURAL WAVELENGTH, ETC.—*Continued*

Meters	n	L×C	Meters	n	L×C	Meters	n	L×C
750	400,000	0 1583	1000	300,000	0.282	1500	200,000	0 633
755	397,000	0 1604	1010	297,100	0.287	1510	198,700	0.642
760	395,000	0 1626	1020	294,200	0.293	1520	197,400	0 650
765	392,000	0 1647	1030	291,300	0.299	1530	196,100	0 659
770	390,000	0 1669	1040	288,500	0 304	1540	194,800	0 667
775	387,000	0 1690	1050	285,700	0 310	1550	193,500	0 676
780	385,000	0 1712	1060	283,000	0 316	1560	192,300	0.685
785	382,000	0 1734	1070	280,400	0 322	1570	191,100	0.694
790	380,000	0 1756	1080	277,800	0.328	1580	189,900	0 703
795	377,000	0 1779	1090	275,200	0 334	1590	188,700	0.712
800	375,000	0 1801	1100	272,700	0 341	1600	187,500	0 721
805	373,000	0 1824	1110	270,300	0 347	1610	186,300	0 730
810	370,000	0 1847	1120	267,900	0 353	1620	185,100	0.739
815	368,000	0 1870	1130	265,500	0 359	1630	184,000	0 748
820	366,000	0 1893	1140	263,200	0 366	1640	182,900	0 757
825	364,000	0 1916	1150	260,900	0 372	1650	181,800	0.766
830	361,000	0 1939	1160	258,600	0.379	1660	180,700	0 776
835	359,000	0 1962	1170	256,400	0 385	1670	179,600	0 785
840	357,000	0 1986	1180	254,200	0 392	1680	178,500	0.794
845	355,000	0 201	1190	252,100	0 399	1690	177,400	0.804
850	353,000	0 203	1200	250,000	0 405	1700	176,400	0 813
855	351,000	0 206	1210	247,900	0 412	1710	175,400	0 823
860	349,000	0 208	1220	245,900	0 419	1720	174,400	0 833
865	347,000	0 211	1230	243,900	0 426	1730	173,400	0 842
870	345,000	0 213	1240	241,900	0 433	1740	172,400	0 852
875	343,000	0 216	1250	240,000	0 440	1750	171,400	0.862
880	341,000	0 218	1260	238,100	0.447	1760	170,500	0 872
885	339,000	0 220	1270	236,200	0 454	1770	169,500	0 882
890	337,000	0 223	1280	234,400	0 461	1780	168,500	0 892
895	335,000	0 225	1290	232,600	0 468	1790	167,600	0 902
900	333,000	0 228	1300	230,800	0 476	1800	166,700	0 912
905	331,000	0 231	1310	229,000	0 483	1810	165,700	0 922
910	330,000	0 233	1320	227,300	0 490	1820	164,800	0 932
915	328,000	0 236	1330	225,600	0 498	1830	163,900	0 943
920	326,000	0 238	1340	223,900	0 505	1840	163,000	0 953
925	324,000	0 241	1350	222,200	0.513	1850	162,200	0 963
930	323,000	0 243	1360	220,600	0 521	1860	161,300	0 974
935	321,000	0 246	1370	219,000	0.528	1870	160,400	0 984
940	319,000	0 249	1380	217,400	0 536	1880	159,600	0 995
945	317,000	0 251	1390	215,800	0 544	1890	158,700	1 005
950	316,000	0 254	1400	214,300	0 552	1900	157,900	1 015
955	314,000	0 257	1410	212,800	0 560	1910	157,100	1 026
960	313,000	0 259	1420	211,300	0 568	1920	156,300	1 037
965	311,000	0 262	1430	209,800	0.576	1930	155,400	1 048
970	309,000	0.265	1440	208,300	0.584	1940	154,600	1.059
975	308,000	0 268	1450	206,900	0 592	1950	153,800	1.070
980	306,000	0 270	1460	205,500	0 600	1960	153,100	1 081
985	305,000	0 273	1470	204,100	0 608	1970	152,300	1 092
990	303,000	0 276	1480	202,700	0 616	1980	151,500	1 103
995	302,000	0 279	1490	201,300	0 625	1990	150,800	1 114

RELATION OF NATURAL WAVELENGTH, ETC.—*Continued*

Meters	n	L×C	Meters	n	L×C	Meters	n	L×C
2000	150,000	1.126	3000	100,000	2 53	4000	75,000	4.50
2020	148,500	1.148	3020	99,400	2 57	4020	74,700	4.55
2040	147,100	1.171	3040	98,700	2 60	4040	74,300	4.59
2060	145,600	1.194	3060	98,100	2 64	4060	73,900	4.64
2080	144,200	1 218	3080	97,400	2.67	4080	73,600	4.69
2100	142,900	1.241	3100	96,800	2 70	4100	73,200	4.73
2120	141,500	1.265	3120	96,200	2 74	4120	72,800	4 78
2140	140,200	1 289	3140	95,600	2.78	4140	72,500	4 82
2160	138,900	1.313	3160	95,000	2 81	4160	72,100	4 87
2180	137,600	1.338	3180	94,400	2.85	4180	71,800	4 92
2200	136,400	1 362	3200	93,800	2.88	4200	71,500	4 96
2220	135,000	1 387	3220	93,200	2 92	4220	71,100	5 01
2240	133,900	1 412	3240	92,600	2.96	4240	70,800	5.06
2260	132,700	1 438	3260	92,000	2 99	4260	70,400	5 11
2280	131,600	1 463	3280	91,500	3.03	4280	70,100	5 16
2300	130,400	1 489	3300	90,900	3 06	4300	69,800	5.20
2320	129,300	1.515	3320	90,400	3.10	4320	69,500	5 25
2340	128,200	1 541	3340	89,800	3.14	4340	69,100	5 30
2360	127,100	1 568	3360	89,300	3 18	4360	68,800	5 35
2380	126,000	1 594	3380	88,800	3 22	4380	68,500	5.40
2400	125,000	1.621	3400	88,300	3 25	4400	68,200	5 45
2420	124,000	1.548	3420	87,700	3.29	4420	67,900	5 50
2440	122,900	1 676	3440	87,200	3 33	4440	67,600	5 55
2460	121,900	1.703	3460	86,700	3 37	4460	67,300	5 60
2480	121,000	1.731	3480	86,200	3 41	4480	67,000	5 65
2500	120,000	1 759	3500	85,700	3 45	4500	66,700	5 70
2520	119,000	1.787	3520	85,300	3 49	4520	66,400	5 75
2540	118,100	1 816	3540	84,800	3 53	4540	66,100	5 80
2560	117,200	1 845	3560	84,300	3 57	4560	65,800	5 85
2580	116,300	1 874	3580	83,800	3 61	4580	65,500	5 90
2600	115,400	1 903	3600	83,400	3 65	4600	65,200	5 96
2620	114,500	1 932	3620	82,900	3 69	4620	65,000	6 01
2640	113,600	1.962	3640	82,400	3 73	4640	64,700	6 06
2660	112,800	1 991	3660	82,000	3 77	4660	64,400	6 11
2680	111,900	2.02	3680	81,500	3 81	4680	64,100	6 17
2700	111,100	2 05	3700	81,100	3.85	4700	63,900	6 22
2720	110,300	2 08	3720	80,700	3 90	4720	63,600	6 27
2740	109,500	2 11	3740	80,200	3 94	4740	63,300	6 32
2760	108,700	2 14	3760	79,800	3 98	4760	63,000	6 38
2780	107,900	2 18	3780	79,400	4 02	4780	62,800	6 43
2800	107,100	2 21	3800	79,000	4 06	4800	62,500	6 49
2820	106,400	2 24	3820	78,600	4 11	4820	62,300	6 54
2840	105,600	2 27	3840	78,200	4 15	4840	62,000	6 59
2860	104,900	2 30	3860	77,700	4 19	4860	61,800	6 65
2880	104,200	2 33	3880	77,300	4 24	4880	61,500	6 70
2900	103,400	2.37	3900	76,900	4 28	4900	61,200	6 76
2920	102,700	2 40	3920	76,500	4 32	4920	61,000	6 81
2940	102,000	2 43	3940	76,200	4 37	4940	60,800	6 87
2960	101,300	2 47	3960	75,800	4 41	4960	60,500	6 92
2980	100,700	2 50	3980	75,400	4 46	4980	60,300	6.98

RELATION OF NATURAL WAVELENGTH, ETC.—*Continued*

Meters	n	L×C	Meters	n	L×C	Meters	n	L×C
5000	60,000	7 04	7500	40,000	15.83	10000	30,000	28.2
5050	59,400	7.18	7550	39,700	16.04	10100	29,700	28.7
5100	58,800	7.32	7600	39,500	16.26	10200	29,400	29.3
5150	58,300	7.47	7650	39,200	16.47	10300	29,100	29.9
5200	57,700	7.61	7700	39,000	16.69	10400	28,800	30.4
5250	57,200	7.76	7750	38,700	16.90	10500	28,600	31 0
5300	56,600	7 91	7800	38,500	17.12	10600	28,300	31 6
5350	56,100	8.06	7850	38,200	17.34	10700	28,000	32.2
5400	55,600	8.21	7900	38,000	17.56	10800	27,800	32 8
5450	55,100	8.36	7950	37,700	17.79	10900	27,500	33.4
5500	54,600	8 52	8000	37,500	18.01	11000	27,300	34.1
5550	54,100	8 67	8050	37,300	18.24	11100	27,000	34.7
5600	53,600	8.83	8100	37,000	18 47	11200	26,800	35.3
5650	53,100	8 99	8150	36,800	18.70	11300	26,500	35.9
5700	52,700	9.15	8200	36,600	18.93	11400	26,300	36.6
5750	52,200	9 31	8250	36,400	19 16	11500	26,100	37.2
5800	51,700	9.47	8300	36,100	19 39	11600	25,900	37.9
5850	51,300	9 63	8350	35,900	19 62	11700	25,600	38.5
5900	50,900	9 80	8400	35,700	19 86	11800	25,400	39 2
5950	50,400	9 96	8450	35,500	20.1	11900	25,200	39.9
6000	50,000	10.13	8500	35,300	20.3	12000	25,000	40.5
6050	49,600	10 30	8550	35,100	20.6	12100	24,800	41.2
6100	49,200	10.47	8600	34,900	20.8	12200	24,600	41.9
6150	48,800	10.65	8650	34,700	21 1	12300	24,400	42.6
6200	48,400	10.82	8700	34,500	21.3	12400	24,200	43.3
6250	48,000	11 00	8750	34,300	21.6	12500	24,000	44.0
6300	47,600	11.17	8800	34,100	21.8	12600	23,800	44.7
6350	47,200	11 35	8850	33,900	22.0	12700	23,600	45 4
6400	46,900	11 53	8900	33,700	22 3	12800	23,400	46 1
6450	46,500	11.71	8950	33,500	22.5	12900	23,300	46 8
6500	46,200	11 89	9000	33,300	22.8	13000	23,100	47 6
6550	45,800	12 08	9050	33,100	23.1	13100	22,900	48 3
6600	45,500	12 26	9100	33,000	23 3	13200	22,700	49.0
6650	45,100	12 45	9150	32,800	23.6	13300	22,600	49 8
6700	44,800	12.64	9200	32,600	23 8	13400	22,400	50 5
6750	44,400	12 83	9250	32,400	24 1	13500	22,200	51 3
6800	44,100	13 02	9300	32,300	24.3	13600	22,100	52.1
6850	43,800	13 21	9350	32,100	24.6	13700	21,900	52.8
6900	43,500	13.40	9400	31,900	24.9	13800	21,700	53 6
6950	43,200	13.60	9450	31,700	25.1	13900	21,600	54.4
7000	42,900	13 79	9500	31,600	25.4	14000	21,400	55 2
7050	42,600	13.99	9550	31,400	25 7	14100	21,300	56.0
7100	42,300	14.19	9600	31,300	25 9	14200	21,100	56.8
7150	42,000	14.39	9650	31,100	26 2	14300	21,000	57 6
7200	41,700	14 59	9700	30,900	26.5	14400	20,800	58.4
7250	41,400	14.79	9750	30,800	26 8	14500	20,700	59 2
7300	41,100	15.00	9800	30,600	27 0	14600	20,600	60 0
7350	40,800	15.21	9850	30,500	27.3	14700	20,400	60.8
7400	40,500	15.41	9900	30,300	27.6	14800	20,300	61.6
7450	40,300	15 62	9950	30,200	27.9	14900	20,100	62.5

RELATION OF NATURAL WAVELENGTH, ETC.—*Continued*

Meters	n	L×C	Meters	n	L×C	Meters	n	L×C
15000	20,000	63 3	19000	15,790	101 5	26000	11,540	190 3
15100	19,870	64 2	19100	15,710	102 6	26200	11,450	193 2
15200	19,740	65 0	19200	15,630	103 7	26400	11,360	196 2
15300	19,610	65 9	19300	15,540	104 8	26600	11,280	199.1
15400	19,480	66 7	19400	15,460	105 9	26800	11,190	202 0
15500	19,350	67 6	19500	15,380	107 0	27000	11,110	205 0
15600	19,230	68 5	19600	15,310	108 1	27200	11,030	208 0
15700	19,110	69.4	19700	15,230	109 2	27400	10,950	211 0
15800	18,990	70 3	19800	15,150	110 3	27600	10,870	214 0
15900	18,870	71 2	19900	15,080	111 4	27800	10,790	218.0
16000	18,750	72 1	20000	15,000	112 6	28000	10,710	221 0
16100	18,630	73 0	20200	14,850	114.8	28200	10,640	224 0
16200	18,510	73 9	20400	14,710	117 1	28400	10,560	227 0
16300	18,400	74 8	20600	14,560	119 4	28600	10,490	230 0
16400	18,290	75.7	20800	14,420	121 8	28800	10,420	233 0
16500	18,180	76 6	21000	14,290	124 1	29000	10,340	237 0
16600	18,070	77 6	21200	14,150	126 5	29200	10,270	240 0
16700	17,960	78 5	21400	14,020	128 9	29400	10,200	243 0
16800	17,850	79 4	21600	13,890	131 3	29600	10,130	247 0
16900	17,740	80 4	21800	13,760	133 8	29800	10,070	250 0
17000	17,640	81 3	22000	13,640	136 2	30000	10,000	253 0
17100	17,540	82 3	22200	13,510	138 7	31000	9,600	270 0
17200	17,440	83 3	22400	13,390	141 2	32000	9,380	288 0
17300	17,340	84 2	22600	13,270	143 8	33000	9,090	306 0
17400	17,240	85 2	22800	13,160	146 3	34000	8,830	325 0
17500	17,140	86 2	23000	13,040	148 9	35000	8,570	345 0
17600	17,050	87 2	23200	12,930	151 5	36000	8,340	365 0
17700	16,950	88 2	23400	12,820	154 1	37000	8,110	385 0
17800	16,850	89 2	23600	12,710	156 8	38000	7,900	406 0
17900	16,760	90 2	23800	12,600	159 4	39000	7,690	428 0
18000	16,670	91 2	24000	12,500	162 1			
18100	16,570	92 2	24200	12,400	154 8			
18200	16,480	93 2	24400	12,290	167 6			
18300	16,390	94 3	24600	12,190	170 3			
18400	16,300	95 3	24800	12,100	173 1			
18500	16,220	96 3	25000	12,000	175 9			
18600	16,130	97 4	25200	11,900	178 7			
18700	16,040	98 4	25400	11,810	181 6			
18800	15,960	99 5	25600	11,720	184 5			
18900	15,870	100 5	25800	11,630	187 4			

FREQUENCY VERSUS WAVELENGTH

$$f = \frac{V}{\lambda}$$

where f = frequency in cycles;

λ = wavelength in meters;

V = the velocity of propagation of electromagnetic waves, or 299,820,000 meters per second

KILOCYCLES TO METERS, OR

Meters	Kilocycles	Meters	Kilocycles	Meters	Kilocycles	Meters	Kilocycles	Meters	Kilocycles
5	59960	500	599 6	1000	299 8	1500	199 9	2000	149 9
10	29980	510	587 9	1010	296 9	1510	198.6	2010	149 2
20	14990	520	576 6	1020	293 9	1520	197 2	2020	148 4
30	9994	530	565 7	1030	291 1	1530	196 0	2030	147.7
40	7496	540	555 2	1040	288 3	1540	194 7	2040	147 0
50	5996	550	545 1	1050	285 5	1550	193.4	2050	146 3
60	4997	560	535 4	1060	282 8	1560	192 2	2060	145 5
70	4283	570	526 0	1070	280 2	1570	191.0	2070	144 8
80	3748	580	516 9	1080	277 6	1580	189.0	2080	144 1
90	3331	590	508 2	1090	275 1	1590	188.6	2090	143 5
100	2998	600	499 7	1100	272 6	1600	187.4	2100	142 3
110	2726	610	491 5	1110	270 1	1610	186 2	2110	142 1
120	2499	620	483 6	1120	267 7	1620	185.1	2120	141 4
130	2306	630	475 9	1130	265 3	1630	183 9	2130	140 8
140	2142	640	468 5	1140	263 0	1640	182 8	2140	140.1
150	1999	650	461 3	1150	260 7	1650	181.7	2150	139 5
160	1874	660	454 3	1160	258 5	1660	180 6	2160	138 8
170	1764	670	447 5	1170	256 3	1670	179 5	2170	138 1
180	1666	680	440 9	1180	254 1	1680	178.5	2180	137 5
190	1578	690	434 5	1190	252 0	1690	177.4	2190	136 9
200	1499	700	428 3	1200	249 9	1700	176.4	2200	136 3
210	1428	710	422 3	1210	247 8	1710	175 3	2210	135 7
220	1363	720	416 4	1220	245 8	1720	174 3	2220	135 1
230	1304	730	410 7	1230	243 8	1730	173 3	2230	134.4
240	1249	740	405 2	1210	241 8	1740	172 3	2240	133 8
250	1199	750	399 8	1250	239 9	1750	171 3	2250	133 3
260	1153	760	394 5	1260	238 0	1760	170 4	2260	132 7
270	1110	770	389 4	1270	236 1	1770	169 4	2270	132 1
280	1071	780	384 4	1280	234 2	1780	168 4	2280	131 5
290	1034	790	379 5	1290	232 4	1790	167 5	2290	130 9
300	999 4	800	374 8	1300	230 6	1800	166 6	2300	130 4
310	967 2	810	370.2	1310	228 9	1810	165 6	2310	129 8
320	936 9	820	365 6	1320	227.1	1820	164 7	2320	129 2
330	908 6	830	361.2	1330	225 4	1830	163 8	2330	128 7
340	881 8	840	356 9	1340	223 7	1840	162 9	2340	128 1
350	856 6	850	352 7	1350	222 1	1850	162 1	2350	127 6
360	832 8	860	348 6	1360	220 4	1860	161 2	2360	127 0
370	810 3	870	344 6	1370	218 8	1870	160 3	2370	126 5
380	789 0	880	340.7	1380	217.3	1880	159 5	2380	126 0
390	768 8	890	336 9	1390	215 7	1890	158 6	2390	125 4
400	749 6	900	333 1	1400	214 2	1900	157 8	2400	124 9
410	731 3	910	329 5	1410	212.6	1910	157 0	2410	124 4
420	713 9	920	325 9	1420	211.1	1920	156 2	2420	123 9
430	697 3	930	322 4	1430	209 7	1930	155 3	2430	123 4
440	681 4	940	319 0	1440	208 2	1940	154 5	2440	122 9
450	666 3	950	315 6	1450	206 8	1950	153 8	2450	122 4
460	651 8	960	312 3	1460	205 4	1960	153 0	2460	121 9
470	637 9	970	309 1	1470	204 0	1970	152 2	2470	121 4
480	624 6	980	305 9	1480	202 6	1980	151 4	2480	120 9
490	611 9	990	302 8	1490	201 2	1990	150 7	2490	120.4

This table is used to convert wavelength in meters to kilocycles or kilocycles to meters. It should be remembered that the values are interchangeable, for example:

If the wavelength in meters is required for 1300 kilocycles, it can be found by referring to the figure 1300 in the "Meters" column. Here it is seen that the corresponding figure is 230.6 in the "Kilocycles" column.

Therefore,

1300 kc. = 230.6 meters.

Example: To find the frequency in cycles of a wavelength of 200 meters:

$$f = \frac{299{,}820{,}000}{200} = 1{,}499{,}100 \text{ cycles},$$

or 1499 kilocycles.

The wavelength may be obtained by transposing the above formula:

$$\lambda = \frac{V}{f} = \frac{299{,}820{,}000}{1{,}499{,}100} = 200 \text{ meters}.$$

METERS TO KILOCYCLES

Meters	Kilocycles	Meters	Kilocycles	Meters	Kilocycles	Meters	Kilocycles	Meters	Kilocycles
2500	119 9	3000	99 94	4000	74.96	5000	59.96	7500	39 98
2510	119 5	3020	99.28	4020	74 58	5050	59 37	7550	39 71
2520	119 0	3040	98.62	4940	74 21	5100	58 79	7600	39 45
2530	118 5	3060	97.98	4060	73 85	5150	59 22	7650	39 19
2540	118 0	3080	97 34	4080	73 49	5200	57 66	7700	38 94
2550	117 6	3100	96 72	4100	73.13	5250	57 11	7750	38 69
2560	117 1	3120	96.10	4120	72 77	5300	56 75	7800	38 44
2570	116.7	3140	95 48	4140	72 42	5350	57.11	7850	38 19
2580	116.2	3160	94.88	4160	72 07	5400	55 52	7900	37 95
2590	115 8	3180	94 28	4180	71 73	5450	55 01	7950	37 71
2600	115 3	3200	93 69	4200	71 39	5500	54 51	8000	37 48
2610	114 9	3220	93.11	4220	71 05	5550	54 02	8050	37 25
2620	114 4	3240	92 54	4240	70 71	5600	53 54	8100	37 02
2630	114 0	3260	91 97	4260	70 38	5650	53 07	8150	36 79
2640	113 6	3280	91 41	4280	70 05	5700	52 60	8200	36 56
2650	113 1	3300	90 86	4300	69 73	5750	52 14	8250	36 34
2660	112 7	3320	90 31	4320	69 40	5800	51.69	8300	36 12
2670	112 3	3340	89 77	4340	69 08	5850	51.25	8350	35 91
2680	111 9	3360	89 23	4360	68 77	5900	50 82	8400	35 69
2690	111 5	3380	88 70	4380	68.45	5950	50 39	8450	35.48
2700	111 0	3400	88 18	4400	68 14	6000	49.97	8500	35 27
2710	110 6	3420	87 67	4420	67 83	6050	49.56	8550	35.07
2720	110 2	3440	87 16	4440	67 53	6100	49.15	8600	34.86
2730	109 8	3460	86 65	4460	67 22	6150	48 75	8650	34.66
2740	109 4	3480	86 16	4480	66 91	6200	48.36	8700	34 46
2750	109 0	3500	85 66	4500	66 63	6250	47 97	8750	34.27
2760	108 6	3520	85 18	4520	66.33	6300	47 59	8800	34 07
2770	108 2	3540	84 70	4540	66 04	6350	47 22	8850	33 88
2780	107 8	3560	84 22	4560	65 75	6400	46 85	8900	33 69
2790	107 5	3580	83 75	4580	65 46	6450	46.48	8950	33 50
2800	107.1	3600	83 28	4600	65 18	6500	46.13	9000	33 31
2810	106.7	3620	82 82	4620	64 90	6550	45 77	9050	33 13
2820	106 3	3640	82 37	4640	64 62	6600	45 43	9100	32 95
2830	105 9	3660	81 92	4660	64 34	6650	45 09	9150	32 77
2840	105.6	3680	81 47	4680	64 06	6700	44.75	9200	32 59
2850	105 2	3700	81 03	4700	63 79	6750	44 42	9250	32 41
2860	104 8	3720	80 60	4720	63 52	6800	44 09	9300	32 24
2870	104 5	3740	80 17	4740	63 25	6850	43.77	9350	32.07
2880	104 1	3760	79 74	4760	62 90	6900	43.45	9400	31.90
2890	103.7	3780	79 32	4780	62 72	6950	43.14	9450	31 73
2900	103.4	3800	78 90	4800	62.46	7000	42 83	9500	31 56
2910	103 0	3820	78 49	4820	62 20	7050	42.53	9550	31.39
2920	102 7	3840	78 08	4840	61.95	7100	42.23	9600	31 23
2930	102 3	3860	77 67	4860	61.69	7150	41.93	9650	31.07
2940	102 0	3880	77 27	4880	61.44	7200	41.64	9700	30 91
2950	101 6	3900	76 88	4900	61 19	7250	41.35	9750	30.75
2960	101 3	3920	76 49	4920	60.94	7300	41.07	9800	30.59
2970	100 9	3940	76.10	4940	60.69	7350	40.79	9850	30 44
2980	100 6	3960	75.71	4960	60.45	7400	40.52	9900	30.28
2990	100.3	3980	75 33	4980	60.20	7450	40 24	9950	30 13

Values of wavelength not listed in the columns may be found by applying the decimal system. For example, it may be desired to find the frequency corresponding to 372 meters. There is no wavelength value given to correspond to this number. Therefore, by multiplying 372 by 10, we obtain the figure 3720, which is found listed in the "Meters" column and corresponding to a frequency of 80.60. Since the first value is multiplied by 10, we can move the decimal point one place to the right, giving us a value of 806.0 kc. Therefore, a wavelength of 372 meters corresponds to a frequency of 806 kc.

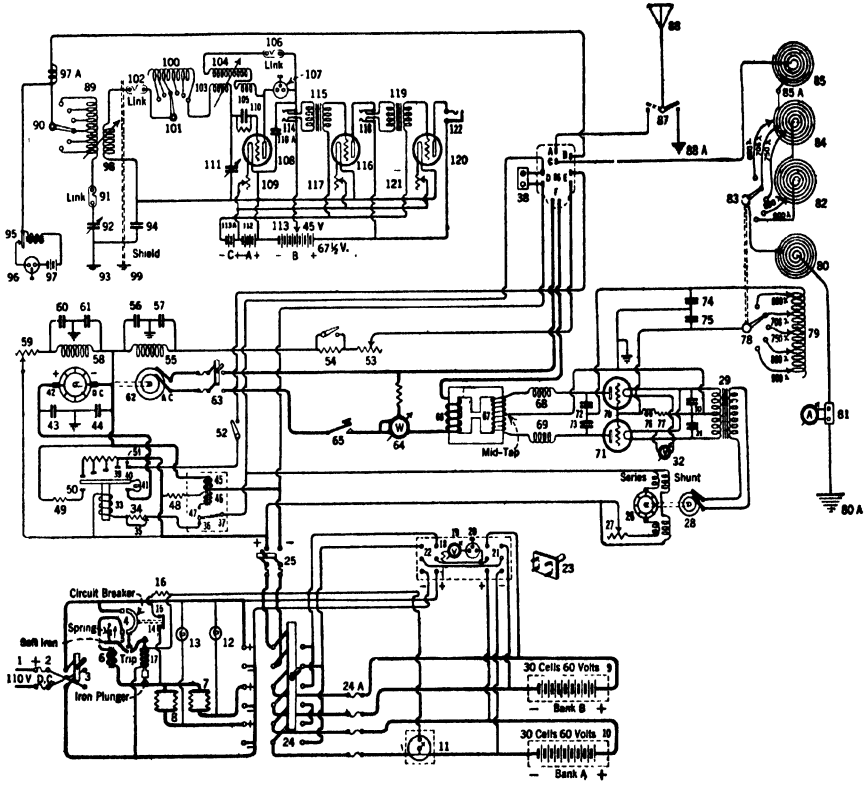

Complete ship-board radio installation consisting of the ET-3628 tube transmitter, IP-501 receiver, and 120-volt storage battery bank for supplying the main operating power in an emergency.

LEGEND FOR COMPLETE ET-3628 INSTALLATION

1. D.C. supply, ship's generator
2. Fuses.
3. Polarity reversing switch.
4. Main circuit contact of overload circuit breaker.
5. Main circuit contact of overload circuit breaker.
6. Overload circuit breaker electro-magnet.
7. Charging resistors.
8. Charging resistors
9 Bank of 30 lead-acid storage cells.
10. Bank of 30 lead-acid storage cells.
11. Ampere-hour meter.
12. Trickle-charge lamp
13. Trickle-charge lamp.
14. Low voltage coil circuit contact.
15. Low voltage coil circuit contact.
16. Limiting resistor.
17. Underload no voltage coil.
18. Voltage multiplier.
19. Voltmeter.
20. Voltmeter switch.
21. Voltmeter plug receptacle.
22. Voltmeter plug receptacle.
23. Voltmeter plug.
24. Six-pole charge-discharge switch.
24A. Fuses.
25. Transmitter panel d-c. supply switch.
26. Filament rotary converter (d-c. end).
27. Filament rotary converter voltage regulator rheostat.
28 A C. end of filament rotary converter
29. Filament heating transformer
30. Filament by-pass condenser (5 mfd)
31. Filament by-pass condenser (5 mfd)
32. Filament voltmeter.
33. Automatic starter solenoid coil
34. Solenoid coil protective resistor
35. Short-circuiting contacts for protective resistor.
36. Fixed contact on overload relay
37. Movable contact on armature of overload relay.
38 Starting button switch.
39. Starting resistors and contact fingers.
40. Contact plunger bar.
41. Flexible connection.
42. Motor armature.
43. Protective condenser (1 mfd).
44. Protective condenser (1 mfd).
45. Overload relay coil.
46. Holding coil.
47. Holding coil fixed contact.
48. Holding coil limiting resistor.
49. Dynamic brake resistance.
50. Dynamic brake contact.
51. Generator field contact.
52. Generator field switch.
53. Generator field rheostat.
54. Low power resistor and switch.
55. Generator field.
56. Protective condenser (1 mfd.).
57. Protective condenser (1 mfd.).
58. Motor field
59. Motor field rheostat.
60. Protective condenser (1 mfd.).
61. Protective condenser (1 mfd.).
62. A.C. generator armature.
63. A C. output switch.
64. Wattmeter.
65. Hand key.
66. Primary of plate transformer.
67. Secondary of plate transformer.
68 Plate r.f. choke coil.
69 Plate r.f. choke coil.
70 UV204-A vacuum tube.
71. UV204-A vacuum tube.
72. Plate blocking condenser (001 mfd.).
73. Plate blocking condenser (.001 mfd.).
74. Plate coupling condenser (002 mfd.).
75. Grid coupling condenser (.014 mfd.).
76 Grid r.f. choke coil.
77. Grid bias resistor, 4000 ohms
78. Wave changing switch (" tank " circuit).
79. Primary or " tank " circuit inductance of aerial transformer.
80. Secondary inductance of aerial transformer.
80A. Ground
81. Antenna ammeter and thermo-couple.
82. Antenna load coil.
83. Wave changing switch (secondary circuit).
84. Aerial load coil.
85. Aerial fine tuning inductance.
85A. Aerial tuning inductance switch.
86. Aerial change-over switch.
A. Aerial connection.
B. Receiver connection.
C. Transmitter connection.
D. Motor starter contacts.
E Generator field contacts.
F. A C generator contacts.
87. Lightning switch.
88. Aerial
88A. Ground.
89. Primary winding of receiving transformer.
90 Primary inductance switch
91 Long wave attachment link
92 Primary series tuning condenser (.0008-0045 mfd).
93. Ground connection.
94. Grounding condenser.
95. Buzzer tester.
96 Buzzer push button switch.
97. Buzzer battery.
97A. Buzzer pick-up coil.
98. Coupling of secondary inductance.
99 Shield.
100 Secondary inductance.
101 Secondary inductance switch.
102 Long wave attachment link.
103. Coupling coil of secondary inductance.
104 Tickler coil.
105. Coupling coil of tickler inductance.
106. Long wave attachment link
107. Oscillation test button switch.
108. Detector tube UX201-A
109. Detector filament rheostat.
110 Grid leak and condenser
110.1. Plate to filament by-pass condenser
111. Secondary tuning condenser (00006-0032 mfd.).
112. " A " battery.
113. " B " battery.
113A. " C " battery.
114 Detector jack.
115 First stage audio transformer.
116. First stage amplifier tube UX201-A.
117. Filament rheostat.
118 First stage amplifier jack
119. Second stage audio transformer
120. Second stage amplifier tube UX201-A.
121. Filament rheostat
122. Second stage amplifier jack.

OPERATION OF COMPLETE SHIP-BOARD APPARATUS

The E.T. 3628 Transmitter.—Refer to pages 1015 and 1016. The transmitter may be operated from the ship's generator or, in an emergency, from the storage battery, by throwing the six-pole switch (24) to the left or right, respectively. When using the ship's generator the storage battery panel circuit breaker should be open, disconnecting the storage batteries.

When the d-c. supply switch (25) on the transmitter is closed current will flow through the motor field (58). When aerial switch (86) is thrown in the down position, or the starting button (38) is closed, current will flow through the starting solenoid (33), through the protective resistor (34), through the lower contact of overload relay (36), through contact bar (37), and back to the negative line. This will cause the contact bar (40) to move upward. As soon as the bar touches the first contact finger current will flow through the starting resistances (39), through the flexible connection (41), through the motor armature (42), through the overload coil (45), and to the negative side of the line. The motor will now start and, as the contact bar continues to rise, the motor speed will increase until the bar reaches the top contact, at which time the motor will be running at maximum speed. At this point the protective resistance (34) is automatically cut in the circuit by the contact (35), which is operated mechanically. The bar now touches the generator field contact (51) and current flows through the generator field (55), providing the generator field switch (52) is closed. The output voltage of the generator is controlled by the rheostat (53). Low power is obtained by opening switch (54) which cuts in the series resistance. As a safety measure switch (52) is used to open the generator field while the motor-generator is running and the transmitter is not being operated.

The input to the primary (66) of the power transformer is controlled by the hand key (65) and measured by the wattmeter (64). The secondary (67) of the power transformer is center-tapped (mid-tapped) and its outer two terminals are connected to the plates of the two UV204-A tubes. Plate choke coils (68 and 69) prevent r.f. currents from flowing in the transformer. The condensers (72 and 73) prevent the low-frequency supply current from flowing in the r.f. circuits, but permits the high-frequency to pass through readily to the " tank " circuit. Condensers (74 and 75) couple the plate and grid circuits respectively, and with the tank inductance (79), constitute the closed oscillatory circuit. Coil (76) is a grid choke for preventing the flow of parasitic currents, i.e., ultra high frequencies.

Switch (78) changes the wavelength of the tank circuit. It is mechanically connected to the secondary switch (83), thereby permitting the inductance of both circuits to be changed at the same time. The inductance of the secondary coil (80) remains fixed after the transmitter is tuned and it should not be changed. The thermo-coupled ammeter (81) measures the antenna current. Coils (82 and 84) are aerial load coils. Coil (85) is the aerial fine tuning inductance. The aerial change-over switch (86) transfers the aerial from the transmitting to the receiving position and vice versa. The lightning switch (87) should be grounded when the operator is not on duty.

The filaments of the UV204-A vacuum tubes (70 and 71) receive their current supply from the step-down filament transformer (29). The condensers (30 and 31) by-pass r.f. current around the transformer. The meter (32) measures the filament voltage. The filament transformer is supplied from a small 100-watt rotary converter, the output of which is controlled by the rheostat (27).

The generator (62) output is increased by means of the field rheostat (53) until the safety spark gaps on the tank circuit condensers begin to spark over. The voltage is then decreased to a point just short of where sparking occurs; the wattmeter (64) should read about 1.5 kw. The foregoing adjustment is for maximum outputs; lower outputs may be obtained by including more resistance in the generator field rheostat (53).

The key (65) should not be pressed while changing wavelengths in order to avoid arcing at the switch contacts.

To stop the transmitter the aerial change-over switch (86) is thrown to the receiving or up position. This not only shifts the aerial from the transmitter to the receiver but opens the key, generator field and starter circuits as well, eliminating the possibility of accident due to live circuits.

The IP-501 Receiver.—When the aerial switch (86) is thrown in the receiving position received signal energy will flow from contact (*A*) to (*B*), to the primary inductance switch (90), thence through inductance (89) through the antenna series condenser (92), and to ground (93). The coil (98), a part of the secondary inductance, is employed to provide variable coupling between the primary and secondary circuits. Condenser (94) is used to ground the filament side of the secondary. When the primary and secondary are in resonance current will flow through the main secondary coil (100), the inductance of which is adjustable by means of switch (101). The purpose of condenser (111) is to tune the secondary. Coil (103) is a part of the secondary and is used to couple the tickler coil (105). Coil (104) is the main tickler coil.

The grounded shield (99) prevents undesirable induction between the primary and secondary circuits. When the oscillation test button (107) is closed the tickler coil is short-circuited; this enables the operator to ascertain if the circuit is in a state of oscillation. A click indicates that the circuit is oscillating.

The remainder of the receiving circuit consists chiefly of a standard two-stage audio amplifier with jacks (114–118–122) in each stage, and individual filament rheostats (109–117–121). Either the detector, first stage, or two stages, may be used for reception of signals. A crystal detector may be employed by connecting it to binding posts on the panel provided for that purpose (not shown in the diagram). To aid in adjusting the crystal detector, and to test the set in general, the buzzer circuit (95–96–97) has been provided. It is inductively coupled to the aerial by the pick-up coil (97*A*).

In operating the I.P. 501 receiver the filament rheostats should be turned on, and the small " send-receive " switch on the receiver panel placed in the " receive " position. The coupling between (89) and (98) should be tightened, maximum primary condenser capacity used, and minimum secondary condenser capacity and minimum tickler coupling employed. These adjustments place the receiver in the " listen in " or " stand by " position.

When tuning for spark signals or I.C.W. the primary and secondary inductance switches are turned until the desired signal is heard, and both inductances (89–100) and condensers (92) and (111) are adjusted for maximum signal strength. The coupling between the primary and secondary should be loosened as much as possible. When tuning for C.W. signals the tickler knob should be turned until the circuit is oscillating. The links 91, 102 and 106 are provided so that extra loading inductances may be used for long waves (a long wave attachment is usually provided for use with this receiver).

Storage Battery Charging Panel.—To charge the batteries switch (3) is closed in the correct position and the six-pole switch (24) is thrown to the left. The circuit breaker is now closed with the left hand and, at the same time, the iron plunger (17) is pushed up with the right hand to release the trip. Current will flow from the positive side of the line through contacts (4 and 5), through the overload coil (6), through the charging resistors (7) and (8), simultaneously through the two battery banks (9 and 10), through the ampere-hour meter (11), and back to the negative side of the line. If the supply voltage becomes excessive when charging, the circuit breaker will trip, thereby preventing damage to the storage batteries. Current will also flow through the contacts (14 and

15) on the rear of the panel, through the limiting resistor (16), through the underload coil (17) and back to the negative line.

When the batteries become fully charged the black needle on the ampere-hour meter (11) will reach the vertical position, thereby short-circuiting coil (17), releasing the iron plunger, causing it to trip the circuit breaker. A small amount of current will then flow through the trickle charge lamps (12 and 13), keeping the battery on a very slow (trickle) charge, otherwise the batteries will slowly discharge. To discharge the battery the six-pole switch (24) is thrown to the right. This connects both banks (9 and 10) in series, giving 120 volts. When the batteries are on charge they are connected in parallel.

INDEX

A

Aerials (see Antennas)
Aeronautical radio range stations, 859
Aircraft radio installation, phantom view of, 883
Airport radio telephone and telegraph transmitter, 871
Airway, 885
A.C. operated receivers, 418
Alternating current, 111–166
  alternation of, 117, 283
  capacity effect of, 122
  choking effect of, 125
  current square law, 145
  cycle of, 116
  effective current of, 144
  effective value of, 144
  effective voltage of, 144
  free a-c , 591
  frequency of, 112, 117, 138, 142, 629
  inductive reactance to, 124
  impedance of, 148
  lag and lead of, 116
  ohmic resistance of, 125
  parallel and series resonance in, 155
  parallel problem in, 151
  phase of, 119
  power factor of, 126, 149
  resistance in, 131
  resonance of, 120, 150
  root mean square (RMS) of, 147
  self-induction in, 134
  series problem in, 152
  time period of, 117
  watt power expended in, 147
  zero angle lag of, 126
Ambient temperature compensation, 933
Ammeter, 106
  antenna r.f. type of, 671
  r.f. type of, 810
Amplification, 400
Amplifier, 273
  harmonic type of, 749
  intermediate type of, 603
  main power type of, 603
  speech type of, 602, 942
Antennas, 538 to 566
  anti-node of, 558
  beverage type of 554
  bi-lateral type of, 540
  brush discharge of, 550
  cage type of, 550
  computing the fundamental wavelength of, 548
  condenser type of, 553
  corona effect of, 550
  directional type of, 863
  fan type of, 546
  feeder line to, 560
  fixed type of, 880
  fundamental wave of, 540
  ground system of, 553
  harp type of, 546
  heat loss of, 555
  height of, 566
  Hertz type of, 732, 736
  inverted "L" flat top type of, 547
  insulation test of, 545
  loop type of, 822
  measurement of inductance and capacity of, by substitution method, 543
  multiple tuned type of, 554
  natural frequency of, 542
  node of, 558
  pole type of, 881
  power of the radiated wave of, 556
  radiation of, 554
  ship type of, 551
  short wave types of, 730
  strut type of, 881
  "T" type of, 547
  trailing type of, 880
  transmission line of, 950
  tuning inductances of, 582
  types of, for aircraft, 880
  umbrella type of, 546
  unilateral type of, 540
  vertical type of, 881
  wave type of, 554
Antenna changeover switch, 797
Antenna coupling and tuning unit, 918, 949, 967
Antenna series condenser, 296, 813
Antenna transfer switch, 812
Antenna tuning condenser, 296
Antenna tuning inductance, 295, 541
Anti-noise microphone, 879
Arc transmitters, 799 to 816
  arc converter used with, 806, 808
  back shunt method of signaling with, 801
  chopper used with, 812
  coupled compensation method of signaling with, 802

models "K" and "Q" types of, 804
motor-generator used with, 805
note-varying variometer used with, 813
relay key used with, 810
signaling with, 801
theory of operation of, 814
Armature, 70
drum-wound, 71
lamination, 72
lap-wound, 70
Atoms, 9, 203
Atmospheric absorption, 564
Audio-frequency amplifier, 199
Autodyne circuit, 768
Aviation radio (see Radio aviation)

B

Beacon stations, characteristic signals transmitted by, 1025
Beacon receiver for aircraft, 885
Beacon station, 857
Beam transmission, 565, 756
Beat frequency, 199
Beat receiver, 358
Bellini–Tosi goniometer, 844
Bonding in aircraft, 880
Bound charge, 171
Broadcast transmitter, popular description of, 623
Broadcast transmitter, type 1-B, 1-kw., 908
antenna coupling for, 918
antenna coupling and tuning unit for, 949
component units of, 922
cooling system for, 921
frequency control of, 916
frequency range of, 908
general operating instructions for, 954
power supply for, 908
protective devices employed in, 917
schematic diagram of, 910
station maintenance of, 958
transmission line for, 950
vacuum tubes used in, 908
Broadcast transmitter, type 50-B, 50-kw., 960
exciter-modulator unit for, 971
frequency range of, 960
low power rectifier and automatic control unit of, 968
main power rectifier for, 984
operator's control unit for, 986
power control unit for, 985
protective devices for, 964
remote control speech input equipment for, 1005
schematic diagram of, 962
speech input equipment for, 992
station power equipment for, 987
studio equipment for, 994
type of circuit for, 960
vacuum tubes used in, 960
[illegible], amplifier for, 975
amplifier for, 977

C

Capacity, distributed, 557
Carrier current, 196
Carrier frequency, 633, 693
Cathode-heater tube, 425
Cells, dry, 20
Characteristics of receiving tubes, 1024
Characteristic signals of radio beacon stations, 1025
Characteristics of transmitting tubes, 1018
Characteristics of variable mu and pentode tubes, 1919
Charging panel, 90, 1003
Choke coils, 135, 384, 390, 597
grid r.f. type of, 672
plate r.f. type of, 672
Chopper, 803, 812
Colpitts oscillator, 642, 698
Commercial broadcast transmitters, 602–633
Commercial telegraph transmitters, 602–633
Commercial tube transmitters, 664–722
ET-3626 type of, 675
ET-3626-A type of, 682
ET-3626-B type of, 683
ET-3627 type of, 697
ET-3628 type of, 664, 1033
ET-3638 type of, 710
ET-3650 type of, 715
Commutation ripples, 503
Complete ship-board radio installation, 1033
operation of, 1034
Condenser, antenna series type of, 543, 813
brush discharge of, 513
blocking type of, 735
breakdown voltage of, 729
bridging, 331
bypass type of, 260, 384, 672
capacity of, 167
charge and discharge analyzed, 178, 184
compressed air type of, 510
coupling of, 389
dielectric of, 167
dielectric absorption of, 513
dielectric constant, 184
dielectric hysteresis in, 513
electrolytic type of, 498
filter arrangement of, 507
fixed and variable types of, in combination, 191
grid excitation type of, 657, 671
grid input condenser, 657
grid use of, 266
high voltage type of, 509
Leyden jar type of, 509
losses in, 513
low voltage type of, 509
mica type of, 511
oil type of, 511
paper dielectric type, 512
parallel arrangement of, 186
plate blocking type, 671
protective, 63

series arrangement of, 188
series type of, 543, 813
short wave type of, 728
stopping use of, 266
trapping use of, 266
Conductance of a circuit, 25
Conduction current, 209, 347, 361
Conductors, 173
Constant current system of modulation, 618
Continuous waves (C.W.), 194
Cooling system for power tubes, 921, 943, 968
Counter electromotive force, 44
Counterpoise, 553
Coupling, auto transformer type of, 598
capacitive type of, 517, 599
close coupling, 315, 600
conductive coupling, 313, 638
critical, 472
direct capacitive, 518
direct inductive coupling, 313
effects of, 317
impedance type of, 622
inductive type of, 734, 741
loose coupling, 314, 601
magnetic type of, 517, 734, 741
resistance type of, 622
tight coupling, 600
transformer type of, 599, 622
Crystals, 305, 893, 932
oscillator, 893, 932, 972
quartz, 603
rectifier, 305
Crystal controlled transmitter, 741
Current flow, 111
Current square law, 145
Curve diagrams, logarithmic curve, 75
principle of, 74
sine curve, 77
straight line curve, 74

D

Damped oscillations, 304
Damping, 526, 783
excessive damping, 593
Damped waves, 779
Damped wave transmitters, 779
Decibel transmission unit, 1013
Deck insulator, 552
Decrement of damping, damping factor or damping constant, 595, 797
Decremeter, Kolster type of, 596
Detection, condenser method of, 360
power method of, 255, 339
Detector, 307
self-heterodyning type of, 356
space charge type of, 899
Dielectric, 192
absorption loss in, 556
absorption of, 561
Dielectric constant of various gases, liquids and solids, 1023
Direct current, pulsating, 114
Direction finder, automatic compensator used with, 826
Bellini–Tosi goniometer type of, 844
circuit of, 825
figure-of-eight diagram, 840
how ship's bearing is obtained with, 828
important tests and maintenance of, 832
indicator used with, 827
line sense features and sense antenna of, 830
loop used with, 822
obtaining exact direction of distant sending station with, 848
principle of unilateral bearing illustrated with cardioid or figure-of-eight pattern diagram, 849
RCA type of, 822
receiver amplifier system of, 828
single loop type of, 843
unidirectional characteristics of, 846
use of cardioid curve, 849
Discharger, non-synchronous type of, 793
quenched type of, 794
synchronous type of, 794
Discontinuous waves, 779
Displacement current, 213
Distributed capacity, 122, 128, 319, 557
Divided circuits, 23
Double beam directive type transmitter, 864
Dynamotor, 54, 898

E

Eddy currents, 73, 791
Edison storage batteries, 96–101
Electric motor, 41
Electrical prefixes, 21
Electricity by chemical action, 17
Electrodynamic loudspeaker, 452
pot magnet of, 456
Electrolytic rectifier, 735
Electrolyte, 86
Electromagnetic induction, 26, 27, 28, 129
Electromagnetic waves, analogy of wave motion, 592
audio-frequency component of, 621
broad wave, 586
carrier frequency, 621
continuous waves, 590, 631
damped waves, 589
induction of, into receiving aerial, 634
propagation of, 723
pure wave, 584, 797
radio-frequency component of, 621
reflection, refraction and deflection of, 505
sharp wave, 584, 805
undamped waves, 590
velocity of, 541
wavelength formula of, 757
Electromagnetism, 12
Electromotive force, 16
Electrons, 9, 193
carrier of electricity, 207

drift, 210
effect of heat upon, 206
emission of, 207
free, 111, 209, 491
loose, 209, 491
Electron theory, 9, 202
Electrostatic field, 169, 192, 519
Elimination of hum, 422
Emergency transmitter, 715
Emission current, 213
Engine-driven generator, 897
Exide storage batteries, 80–96
Exponential horn, 451
ET–3626 tube transmitter, 675
ET-3626-B tube transmitter, 683
ET 3626-A tube transmitter, 682
ET-3627 tube transmitter, 697
ET–3627-A tube transmitter, 701
ET-3628 tube transmitter, 664, 1033
ET-3638 tube transmitter, 710
ET 3650 tube transmitter, 715
ET-3653-A tube transmitter, 875
ET-3655 short wave transmitter, 773
ET–3656 short wave transmitter, 769

F

Fading, 562
Fairlead, 882
Federal arc transmitters, 799–816
Feeder lines, 560
Feeder wires, 560
Field rheostats, 55
Figure-of-eight diagram, 840
Filter reactors, 135
Filter systems, 424, 487
"brute force" type, 504
oscillograms of output of, 506
Fog signal stations of the U. S., chart of, 819
Four-electrode vacuum tube, 432
Frequency meter, 109, 569
Frequency versus wavelength, 1031, 1032
Frictional electricity, 17
Fusing effects of current on copper wire, 1024

G

Galvanometer, 105
Generator, 33
alternating current type of, 34, 38
armature of, 39
collector rings of, 39
compound wound type of, 47
determination of frequency of, 37
direct current type of, 34, 40
engine-driven type of, 897
field magnets of, 39
field rheostat of, 39, 45, 805
operation of, 35
series wound type of, 46
shunt wound type of, 45
strength of magnetic field of, 37
underlying principles of, 34
wind-driven type of, 897
Goniometer (see Direction finder)
Grid leak, 268
Grid of vacuum tube, 216
Ground station for aviation, 905
Ground waves, 561

H

Harmonics, 559
Hartley oscillator, 638, 690, 724
Heaviside Kennelly layer theory, 562, 723, 758
High Mu, 291
Heising system of modulation, 617
Helix, 30
Heterodyne, 199
Holding magnet, 62
Hot-wire ammeter, 108
Hum elimination, 422

I

Ignition shielding in airplanes, 880
Impedance, 525
Impedance coil, 127, 390
Inductance, aerial tuning type of, 671
antenna loading type of, 810
antenna tuning, 541
astatic winding, 301
bank winding of, 300
basket weave type of, 766
calculation of, 164
concentrated, 541
duo-lateral coil, 299
flat layer solenoid type of, 766
formula for calculating, 163
honeycomb coil, 299
in parallel, 164
in series, 164
loading, 458, 671
Lorenze type of, 766
lumped, 541
mutual, 569, 583
plug-in type of, 767
primary type of, 671
r f. coils, 301
solenoid type of, 766
Inductive reactance, 132
Insulators, 173
deck type of, 552
Intermediate frequency amplifier, 199
Intermediate frequency, 338, 376
Ions, 205, 209, 492
Ionization, 205, 209
principle of, 491
IP–501 receiver, 467
IP–501–A receiver, 470

K

Key relay, 704, 798, 810
Kilo, 21
Kolster decremeter, 596

L

Laminations, 402
Laws of charged bodies, 169
Laws of induction, 132

Lead cell storage battery, 80–90
Lead sulphate, 81
Left-hand rule for determining the direction of rotation of a motor armature, 43
Left-hand rule to find direction of rotation of a d-c. motor, 72
Lenz's law, 29
Linear power amplifier, 1007
Lines of force, residual, 46
Loading inductance, 296, 810
Lodestone, 5
Logarithmic decrement, 591
Logarithmic decrement of damping, damping factor or damping constant, 591
  measurement of, 588
Loudspeaker, 447
  electrodynamic type of, 452

M

Magnets, 5
  attraction and repulsion of, 15
  permanent, 11
  temporary, 11
Magnet wire, dimensions, lengths and resistances of cotton enameled type of, 1021
  dimensions, lengths and resistances of silk-covered type of, 1022
Magnetic, attraction, 5
  coercive force, 12
  coercivity, 12
  density, 7
  field, 6
  flux, 12, 132
  induction, 8, 10
Magnetic, lines of force, 6
  permeability, 12
  reluctivity, 12
  remanence, 12
  retentivity, 12
  saturation, 10
  strain, 132
Magnetic pick-up, 456
Magnetism, 5
  law of, 7
  residual, 46
Magnetomotive force, 439
Master oscillator, 603, 630, 873
Meissner oscillator, 637
Mercury-vapor rectifiers, 967
Meters, ammeter, 106
  frequency meter, 109
  galvanometer, 105
  hot-wire ammeter, 108, 570
  thermo-couple type of, 570
  voltmeter, 105
  wattmeter, 107
Metric system, 1024
Microphone, 605, 608, 994
  anti-noise type of, 879
  carbon type of, 610
  condenser type of, 610, 894, 994
  double button type of, 613
  magnetic type of, 610
Midget receiver, 420
Modulated continuous wave, 196
Modulated oscillator, 661
Modulation, 632, 919, 967
  depth of, 622
  percentage of, 623, 1012
  tone, 693
Modulator, 196, 278, 936, 973
Modulator exciter, 928
Molecules, 8, 202
Monitoring rectifier, 948
Motor, 33, 41
  chopper type of, 709
  with differential winding, 48
Motor-generators, 49
  care of, 65
  Crocker–Wheeler type of, 52
  General Electric type of, 51
  Holtzer–Cabot type of, 53
Motor starter, hand, 56
  automatic, 57
Mutual inductance, 320, 569
Mutual induction, 28

N

Neutralizing, 409, 647, 750, 1011
Neon tube, 737
Non-synchronous spark discharger, 793
Normal atom, 204

O

Ohm's Law for alternating current, 140
Ohm's Law for direct current, 21
Oscillating circuits, methods of coupling, 651
Oscillation period, 567
Oscillator, 193, 279, 345, 605
  Colpitts type of, 642
  Hartley type of, 638
  Meissner type of, 637
  quartz crystal controlled type of, 744
  series feed type of, 726
  shunt feed type of, 724
  tuned-grid tuned-plate circuit of, 644
  tuned-plate circuit of, 643
Oscillograph, 527

P

Parasitic oscillations, 690
Parallel and series resonance, 155
Pentode tube, 430
Percentage of modulation, 623, 1012
Phonograph pick-up, 456
Piezoelectric, 608, 745
  control of, 636
Plain aerial spark discharger, 576
Plate reactor, 390
Plate rectification, 255, 339
Pointer-type course indicator, 866
Polarized cell, 18
  means of preventing polarization, 19
Positive ion, 209
Power factor, 157
Power metering, 988

Potential, 175
Potentiometer, 309
Propagation of radio waves, 293
Protective condensers, 63
Pulsating current, a-c. and d-c. component of, 654
Pure wave, 584, 797
P-8 spark transmitter, 785

Q

Quartz crystal, 288, 603, 607, 747
  care of, 748
  harmonics of, 749
Quenched spark discharger, 794

R

Radiation, 554
Radio aviation, 855-907
  aeronautical radio range stations, 859
  airport radio telephone and telephone transmitter, 871
  airway, 855
  antennas used with, 880
  beacon station, 857
  communication receiver for, 891
  double-beam directive type transmitter for, 864
  ET-3653 A transmitter for, 875
  ground station for, 905
  phantom view of typical plane installation, 883
  radio range, 855
  radio range beacon, 858
  radio range station, 857
  radio range transmitter, 870
  remote control for, 902
  telephone and telegraph transmitter for, 871
Radio compass (see Direction finder)
Radio field intensity, 565
Radio-frequency power amplifier, 935, 972
Radio pelorus (see Direction finder)
Radio position finder (see Direction finder)
Radio range, 855
Radio range beacon system, 858
Radio range station, 857
Radio range transmitter, 870
Reactor, 127, 135
  iron core plate type of, 605
  modulation plate type of, 605
Receivers, aperiodic, 405
  autodyne, 340
  beacon type of, 885
  broad and sharp tuning, 413
  capacitively coupled, 332
  chopper, 336
  communication type of, for aircraft, 891
  8-tube super-heterodyne, 371, 418
  electrostatically coupled, 332
  feed-back action of, 348
  five-tube tuned r.f. receiver employing regeneration, 407
  heterodyne receiver with external oscillator, 364
  homodyne, 340
  inductively coupled, 461
  inductive feed-back, 341
  IP-501 type of, 457, 939
  IP-501-A type, 470
  midget type, 420
  neutralizing procedure, 410
  reflux action in, 366
  regenerative, 333
  regenerative amplification, 377
  regenerative beat receiver using grid detector method of detection, 344
  selectivity of, 414
  self-heterodyne, 340
  sensitivity of, 414
  short wave types of, 760, 892, 899
  six-tube tuned r.f. receiver single dial control, 404
  super-heterodyne, 333, 418
  super-heterodyne with second harmonic oscillator, 366
  three circuit tuner, 385
  tikker, 336
  tuning elements of, 297
  tuned r.f. regenerative, 333
  zero beat, 340
  106-D type, 473
Rectification, full wave, 423, 493
  half-wave, 424
  plate method of, 255, 339
Rectifiers, electrolytic type of, 735
  dry metal type, 498
  full wave type, 423, 735
  gaseous tube type, 490
  half-wave type, 424
  hot-cathode type, 489
  monitoring type of, 948
  single phase full wave type of, 659
  theory of, 485
  thermionic type of, 744
  tungar Type, 493
Reed converter, 867
Reed indicator, 868
Regenerative amplification, 377, 465
Relation of natural wavelength, frequency and inductance, capacity product in condenser circuits, 1026
Relay key, 704, 798, 810
Remote control for aircraft, 902
Remote control speech input equipment, 1005
Resistance, grid leak type of, 672
Residual magnetism, 46
Residual lines of force, 46
Resistor, 126
Resonance, electrical, 120, 572
  plotting a resonance curve, 584
  resonance curve, 588
Right-hand rule to find direction of induced e.m.f. in generator armature, 72
Rotary converters, 54
  for filament supply, 672

S

Saturation point, 399
Screen grid vacuum tube, 426, 908
Self-heterodyning, 351
Self-heterodyning detector, 344
Self-inductance, 128
Self-induction, 134
Series-parallel circuit, 24
Sharp wave, 584, 797
Shield grid vacuum tube, 426, 908
Short wave adapter, 778
Short wave condenser, 296
Short wave transmission and reception, 723, 892
Sine wave, relation to $2\pi f$, 141
Single circuit tuner, 313
Solenoid, 30
Skip distance effect, 562, 758
Sky waves, 561
  skipped distance effect of, 724
Space charge, 213, 346, 360, 899
Spark discharge, analysis of, 781
  principles of, 780
Spark frequency, 308
Spark gap, non-synchronous type of, 793
  synchronous type of, 794
  quenched type of, 794
Spark transmitters, 779–798
  P–8 type of, 785
  relay key used with, 798
  tuning of, 787
Speech amplifier, 602, 942
Standard time chart, 1017
Stand-by adjustment, 329
Static charge, 192
Static electricity, 17
Static voltmeter, 176
Storage batteries, active material in, 81
  assembly of Edison type, 97
  capacity of, 87
  care and operation of Exide lead-acid types, 95
  care of Edison type, 99
  charging Edison type, 98
  charging of, 88
  charging panel for, 90, 1003
  chloride type, 85
  construction of Edison type, 96
  Edison type, 96
  electrolyte of, 86
  fundamental action of, 80
  general construction of Exide type, 82
  ironclad type, 84
  lead cell type, 81
  reaction of charge and discharge in Edison type, 99
  specific gravity of, 86
  types of, 80
Super-heterodyne receiver, 366

T

Telephone receivers, 437
  ampere-turns of, 439
  balanced armature type of, 442
Tickler coil, 342, 378, 464, 469, 479
Time chart of the world, 1017
Transformers, audio-frequency type of, 398
  air core type, 788
  closed core power type of, 791
  filament heating type of, 672
  hysteresis in, 501, 791
  intermediate frequency type of, 397
  open core power type of, 792
  power type for plate potential, 672
  radio-frequency type of, 394
  ratio of the transformation of power in, 793
  step-down type of, 32
  step-up type of, 32
Transient phenomenon, 530
Transmission range, 561
Transmission unit, 1013
Transmitters, elementary function of, 303
Tone modulation, 693
Trigonometric functions, 1020
Triode valve, 215
Tripping magnet, 62
Tuned circuit, 524
Tungar rectifier, 101
  charging principle, 103
  tungar bulb, 101
Tuning, 523, 631, 673
  fine type of, 582
  rough type of, 582
  two-spot, 357
Two-electrode vacuum tube, 201

U

Units of electricity, 20
  Ampere, 20, 111, 131
  Coulomb, 20, 111
  Farad, 21, 184
  Henry, 20, 135
  Joule, 21
  Meg, 21
  Mho, 25, 290
  Microfarad, 185
  Micromho, 290
  Millihenry, 21
  Ohm, 20, 131
  Picafarad, 185
  Volt, 20
  Watt, 21
Unilateral bearing, 849
Untuned circuit, 524

V

Vacuum tubes, a-c. component of, 222
  a-c. filament type, 421, 425
  a-c. types of, 422
  amplification factor of, 289
  amplifier use, 273
  as a voltmeter, 291
  audio detector, 200
  audio-frequency amplifier, 199
  biasing the grid, 246
  cathode-heater type, 228, 425

characteristics of receiving types of, 1024
characteristics of transmitting types of, 1018
characteristic of variable mu and pentode tubes, 1019
detector, 198, 248
d-c. component of, 222
filament circuit of, 226
filament heating of, 227
first detector, 200
five-electrode type of, 430
four-electrode type of, 426
gases in, 492
gas effect in, 230
grid circuit of, 226
grid condenser, 266
grid conduction current, 268
grid current in, 224
grid of, 216
grid leak, 268
grid leak, grid condenser method of detection, 261
grid-voltage versus plate-current characteristic curves, experiment, 240
hard type of, 214, 230
in parallel, 655
in push-pull, 771
intermediate frequency amplifier, 199
intermediate power amplifiers, 631
master oscillator, 603
measurement of characteristics, 288
modulator, 195
modulator tubes, 605, 936, 973
mutual conductance of, 289
one way conduction in, 214
oscillator, 193, 279
parallel connection of, 669
pentode type of, 430
plate action in, 233
plate and filament action in, 233
plate circuit of, 226
point of saturation, 231
power amplifier, 194
power amplifier types of, 622
power tubes, 281
push-pull arrangement of, 199
radio-frequency amplifiers, 198
reactivation of, 232
rectifier tubes, 423
rectifier, 306
saturation point of, 233
second detector, 200
screen-grid types of, 426, 908
shield grid type of, 426, 908
short wave type of, 740
soft type of, 214
space charge in, 231
straight amplifier, 278
super-control screen-grid type of, 434
two electrode type of, 201, 214
three electrode type, 215
used as oscillators, 605
vacuum of, 230
variable mu type of, 419, 434
voltage regulator type, 501
Vacuum tube coupling, 386
impedance coupling, 390
push-pull, 386
resistance coupling, 386
cascade coupling, 386
transformer coupling, 392
Variable mu tube, 419, 434
Variometer, 302
Variometer, note-varying type of, 813
Variocoupler, 315
Vector diagrams, 148, 150
the reference vector, 148
Visual beacon indicator, 862
Voltage divider, 487
Voltaic cell, 18
Voltmeter, 105
Volume control, 404

W

Water rheostat, 69
Wattmeter, 107
Wave-changer switch, 673
Wavelength versus frequency, 1031, 1032
Wavemeter, 569
exploring coil of, 569
for tuning a transmitter, 581
types of, 575
uses of, 576
Wave trap, 415
Western Electric aviation apparatus, 894, 906
Wheatstone bridge, 571
Wind-driven generator, 897

1-B 1-kw. broadcast transmitter, 908
50 B 50-kw. broadcast transmitter, 960
106 D receiver, 473
operation of, 480